MIAMI-DADE COUNTY
BUILDING CODE COMPLIANCE OFFICE (BCCO)
PRODUCT CONTROL DIVISION

MIAMI-DADE COUNTY, FLORIDA
METRO-DADE FLAGLER BUILDING
140 WEST FLAGLER STREET, SUITE 1603
MIAMI, FLORIDA 33130-1563
(305) 375-2901 FAX (305) 372-6339
www.miamidade.gov/buildingcode

NOTICE OF ACCEPTANCE (NOA)

Florida Extruders International, Inc.
2540 Jewett Lane
Sanford, FL 32771

SCOPE:

This NOA is being issued under the applicable rules and regulations governing the use of construction materials. The documentation submitted has been reviewed by Miami-Dade County Product Control Division and accepted by the Board of Rules and Appeals (BORA) to be used in Miami Dade County and other areas where allowed by the Authority Having Jurisdiction (AHJ).

This NOA shall not be valid after the expiration date stated below. The Miami-Dade County Product Control Division (In Miami Dade County) and/or the AHJ (in areas other than Miami Dade County) reserve the right to have this product or material tested for quality assurance purposes. If this product or material fails to perform in the accepted manner, the manufacturer will incur the expense of such testing and the AHJ may immediately revoke, modify, or suspend the use of such product or material within their jurisdiction. BORA reserves the right to revoke this acceptance, if it is determined by Miami-Dade County Product Control Division that this product or material fails to meet the requirements of the applicable building code. This product is approved as described herein, and has been designed to comply with the Florida Building Code, including the High Velocity Hurricane Zone.

DESCRIPTION: Series "Milestone 5000" Aluminum Single Hung Window – S.M.I.

APPROVAL DOCUMENT: Drawing No. **FEI0002**, titled "Milestone Series 5000 Aluminum SH Windows", sheets 1 through 7 of 7, dated 07/20/09, prepared by PTC, LLC, signed and sealed by Robert J. Amoruso, P.E., bearing the Miami-Dade County Product Control Approval stamp with the Notice of Acceptance number and approval date by the Miami-Dade County Product Control Division.

MISSILE IMPACT RATING: Small Missile Impact Resistant

LABELING: Each unit shall bear a permanent label with the manufacturer's name or logo, city, state and following statement: "Miami-Dade County Product Control Approved", unless otherwise noted herein.

RENEWAL of this NOA shall be considered after a renewal application has been filed and there has been no change in the applicable building code negatively affecting the performance of this product.

TERMINATION of this NOA will occur after the expiration date or if there has been a revision or change in the materials, use, and/or manufacture of the product or process. Misuse of this NOA as an endorsement of any product, for sales, advertising or any other purposes shall automatically terminate this NOA. Failure to comply with any section of this NOA shall be cause for termination and removal of NOA.

ADVERTISEMENT: The NOA number preceded by the words Miami-Dade County, Florida, and followed by the expiration date may be displayed in advertising literature. If any portion of the NOA is displayed, then it shall be done in its entirety.

INSPECTION: A copy of this entire NOA shall be provided to the user by the manufacturer or its distributors and shall be available for inspection at the job site at the request of the Building Official.

This NOA and consists of this page 1 and evidence pages E-1 and E-2, as well as approval document mentioned above.

The submitted documentation was reviewed by **Manuel Perez, P.E.**

MIAMI-DADE COUNTY APPROVED

Florida Extruders International. Inc.

NOTICE OF ACCEPTANCE: EVIDENCE SUBMITTED

A. DRAWINGS

1. Manufacturer's die drawings and sections.
2. Drawing No **FEI0002**, Sheets 1 through 7 of 7, titled "Milestone Series 5000 Aluminum SH Windows", dated 07/20/09, prepared by PTC, LLC, signed and sealed by Robert J. Amoruso, P.E.

B. TESTS

1. Test reports on 1) Air Infiltration Test, per FBC, TAS 202-94
   2) Uniform Static Air Pressure Test, Loading per FBC TAS 202-94
   3) Water Resistance Test, per FBC, TAS 202-94
   4) Large Missile Impact Test per FBC, TAS 201-94
   5) Cyclic Wind Pressure Loading per FBC, TAS 203-94
   6) Forced Entry Test, per FBC 2411 3.2.1, TAS 202-94

   along with marked-up drawings and installation diagram of aluminum single hung window, specimens #SH-1 through #SH-6, prepared by National Certified Testing Laboratories, Test Report No. **NCTL-210-3567-2**, dated 10/24/08, signed and sealed by Gerard J. Ferrara, P.E.
2. Test reports on 1) Air Infiltration Test, per FBC, TAS 202-94
   2) Uniform Static Air Pressure Test, Loading per FBC TAS 202-94
   3) Water Resistance Test, per FBC, TAS 202-94
   4) Large Missile Impact Test per FBC, TAS 201-94
   5) Cyclic Wind Pressure Loading per FBC, TAS 203-94
   6) Forced Entry Test, per FBC 2411 3.2.1, TAS 202-94

   along with marked-up drawings and installation diagram of aluminum single hung window, specimens #SH-9, #SH-10 and #SH-11prepared by National Certified Testing Laboratories, Test Report No. **NCTL-210-3568-2**, dated 10/24/08, signed and sealed by Gerard J. Ferrara, P.E.

C. CALCULATIONS

1. Anchor verification calculations and structural analysis, complying with FBC-2007, prepared by PTC, LLC, dated 5/19/09, signed and sealed by Robert J. Amoruso, P.E. **Complies with ASTM E1300-04**

D. QUALITY ASSURANCE

1. Miami Dade Building Code Compliance Office (BCCO).

E. MATERIAL CERTIFICATIONS

1. Notice of Acceptance No. **09-0312.03** issued to E.I. DuPont DeNemours & Co., Inc. for their "**DuPont Sentry Glass® Interlayer**" dated 05/13/09, expiring on 01/14/12.

Manuel Perez, P.E.
Product Control Examiner
NOA No. 09-0723.07
Expiration Date: November 18, 2014
Approval Date: November 18, 2009

F. STATEMENTS

1. Statement letter of conformance and no financial interest, dated July 20, 2009, signed and sealed by Robert J. Amoruso, P.E.

G. OTHERS

1. None.

Manuel Perez, P.E.
Product Control Examiner
NOA No. 09-0723.07
Expiration Date: November 18, 2014
Approval Date: November 18, 2009

FLORIDA EXTRUDERS INTERNATIONAL, Inc.

IMPACT SH Window, SMI

INSTALLATION ANCHORAGE DETAILS

GENERAL NOTES:

1. THIS PRODUCT IS DESIGNED TO COMPLY WITH THE HIGH VELOCITY HURRICANE ZONE (HVHZ) OF THE 2004 AND 2007 FLORIDA BUILDING CODE (FBC) AT THE DESIGN PRESSURES STATED HEREIN. THE PRODUCT DETAILS CONTAINED HEREIN ARE BASED UPON SIGNED AND SEALED TEST REPORT # NCTL-210-3567-2 AND NCTL-210-3568-2 DATED 01/07/2009 AND ASSOCIATED LABORATORY STAMPED DRAWINGS AND WERE TESTED IN ACCORDANCE WITH CURRENT DADE COUNTY PROTOCOLS.

2. ADEQUACY OF THE EXISTING STRUCTURAL CONCRETE MASONRY AND 2X FRAMING AS A MAIN WIND FORCE RESISTING SYSTEM CAPABLE OF WITHSTANDING AND TRANSFERRING APPLIED PRODUCT LOADS TO THE STRUCTURE IS THE RESPONSIBILITY OF THE ENGINEER OR ARCHITECT OF RECORD.

3. WHEN WOOD BUCKS ARE USED, THEY SHALL NOT BE CONSIDERED PART OF THE STRUCTURAL SUBSTRATE REGARDLESS OF THEIR ATTACHMENT TO THE STRUCTURAL SUBSTRATE. WOOD BUCKS SHALL BE DESIGNED AND ANCHORED TO PROPERLY TRANSFER ALL LOADS TO THE STRUCTURE. BUCK DESIGN AND INSTALLATION IS THE RESPONSIBILITY OF THE ENGINEER OR ARCHITECT OF RECORD.

4. WHEN 1X AND 2X WOOD BUCKS ARE USED AND IN CONTACT WITH CONCRETE AND/OR MASONRY, THE WOOD USED SHALL BE EITHER A PRESERVATIVE TREATED SOUTHERN YELLOW PINE OR A DURABLE WOOD SPECIES IN ACCORDANCE WITH 2007 FBC – BUILDING, SECTION 2326.2. THE WOOD USED MUST HAVE A SPECIFIC GRAVITY OF 0.55 MINIMUM.

5. AN IMPACT PROTECTIVE SYSTEM (I.E. SHUTTERS, ETC.) IS NOT REQUIRED WITH THESE WINDOWS.

6. WINDOW FRAME MATERIAL: ALUMINUM 6063-T6 AND 6005-T5.

7. GLASS MEETS THE REQUIREMENTS OF ASTM E1300.

8. DESIGNATIONS "X" AND "O" STANDS FOR THE FOLLOWING: X: OPERABLE SASH, O: FIXED LIGHT.

9. A 1/3 INCREASE IN ALLOWABLE STRESS FOR WIND LOADS WAS NOT USED IN THE DESIGN OF THE PRODUCTS SHOWN HEREIN. WIND LOAD DURATION FACTOR (Cd = 1.6) HAS NOT BEEN USED FOR WOOD ANCHOR DESIGN.

INSTALLATION NOTES:

1. ONE (1) INSTALLATION ANCHOR IS REQUIRED AT EACH ANCHOR LOCATION SHOWN ON THE ELEVATIONS.

2. NOT APPLICABLE.

3. ALL INSTALLATION ANCHORS MUST HAVE A CORROSION RESISTANT COATING OR BE MADE OF STAINLESS STEEL.

4. SEAL FRAME CORNERS AT SILL-TO-JAMB AND HEAD-TO-JAMB WITH SMALL JOINT SEAM SEALANT. SEE CORNER DETAIL.

5. SEAL ALL INSTALLATION ANCHOR HEADS WITH SMALL JOINT SEAM SEALANT DURING INSTALLATION. APPLY SEALANT IN COUNTERSINK BEFORE ANCHOR INSTALLATION AND SEAL ANCHOR HEAD AFTER ANCHOR NSTALLATION.

6. THE SPACING OF INSTALLATION ANCHORS DEPICTED IS THE MAXIMUM SPACING TO BE USED FOR PRODUCT INSTALLATION. ANCHORS ARE TO MATCH TYPE, SIZE, EDGE DISTANCE AND EMBEDMENT OF THOSE SHOWN IN TABLE 1 FOR RESPECTIVE SUBSTRATE.

7. SHIM AS REQUIRED AT EACH INSTALLATION ANCHOR WITH LOAD BEARING SHIM(S). MAXIMUM ALLOWABLE SHIM THICKNESS IS 1/4 INCH. SHIM WHERE SPACE OF 1/16 INCH OR GREATER OCCURS. SHIM(S) SHALL BE CONSTRUCTED OF HIGH DENSITY PLASTIC OR BETTER.

8. FOR INSTALLATION INTO WOOD FRAMING, USE WOOD SCREWS OR TAPPING SCREWS OF SUFFICIENT LENGTH TO ACHIEVE THE MINIMUM EMBEDMENT, MINIMUM EDGE DISTANCE AND MINIMUM ANCHOR SEPARATION OF 1 INCH AS SHOWN IN TABLE 1.

9. FOR INSTALLATION THROUGH 1X WOOD BUCK TO CONCRETE / MASONRY, OR DIRECTLY INTO CONCRETE / MASONRY, USE CONCRETE SCREWS OF SUFFICIENT LENGTH TO ACHIEVE MINIMUM EMBEDMENT AND MINIMUM EDGE DISTANCE AS SHOWN IN TABLE 1. TO PREVENT WOOD BUCKING FROM SPLITTING, DRILL 1/4" DIAMETER HOLE TO ACCOMODATE ANCHORS.

10. FOR INSTALLATION INTO MIAMI-DADE APPROVED MULLION, USE SHEET METAL SCREWS OF SUFFICIENT LENGTH TO ACHIEVE A MINIMUM OF 3 THREADS ENGAGEMENT AS SHOWN ON TABLE 1. APPLICABLE ONLY FOR JAMB TO MULLION CONNECTION, SHIMS CANNOT BE USED.

11. MINIMUM EMBEDMENT AND EDGE DISTANCE EXCLUDE WALL FINISHES (INCLUDING BUT NOT LIMITED TO STUCCO, FOAM, BRICK VENEER AND SIDING).

12. FOR CONCRETE BLOCK, DO NOT INSTALL INSTALLATION ANCHORS INTO MORTAR JOINTS. EDGE DISTANCE IS MEASURED FROM FREE EDGE OF BLOCK OR EDGE OF MORTAR JOINT INTO FACE SHELL OF BLOCK.

13. INSTALLATION ANCHOR CAPACITIES FOR PRODUCTS HEREIN ARE BASED ON SUBSTRATE MATERIALS WITH THE FOLLOWING PROPERTIES:
    A. WOOD - SOUTHERN YELLOW PINE. MINIMUM SPECIFIC GRAVITY OF 0.55.
    B. CONCRETE - MINIMUM COMPRESSIVE STRENGTH SHOWN IN TABLE 1 AND COMPLIES WITH ACI 301, ACI 318-05 AND ACI 355.
    C. MASONRY - STRENGTH CONFORMANCE TO ASTM C-90 AND ACI 530-05, GRADE N, TYPE 1 (OR GREATER). GROUT FILLED PER FLORIDA BUILDING CODE.

Table 1 - ANCHOR SCHEDULE

Substrate	Minimum Concrete Strength (psi)	Anchor Type	Size	Manufacturer	Minimum Embedment (in)	Minimum Edge Distance (in)
CMU	ASTM C90	Carbon Steel Concrete Screw	1/4"	ITW Buildex Tapcon	1 1/4	2 1/2
				ITW Buildex Tapcon with Advanced Threadform Technology	1	2
				Elco Ultracon	1 1/4	1 1/2
Filled (Grouted) CMU	2000	Carbon Steel Concrete Screw	1/4"	ITW Buildex Tapcon with Advanced Threadform Technology	1 3/4	1 1/2
	2000	Carbon Steel Concrete Screw		Elco Ultracon	1 3/4	2 1/2
Concrete	2000	Carbon Steel Concrete Screw	1/4"	ITW Buildex Tapcon with Advanced Threadform Technology	1 3/4	1 1/2
	2700	Carbon Steel Concrete Screw		Elco Ultracon	1 3/4	1 1/2
Wood Frame	n/a	Wood Screw (Carbon or Stainless Steel)	#14	ANSI B18.6.1	1 1/2	1
Mullion (Jamb Only)	n/a	Tapping Screw (Carbon or Stainless Steel)	1/4"	ASME B18.6.4	3 screw threads past inside web of mullion	n/a

Table 1 - Notes:

A. Other manufacturer's concrete screws may be acceptable if they meet or exceed the allowable shear value of 303 lbs for concrete or grout-filled CMU or 202 lbs for hollow CMU, are installed at a minimum embedment required for that allowable and the installation meets the edge distance and spacing requirements for that anchor at the prescribed shear capacity.
B. All screws will be "flat" head.
C. Screw lengths will be sufficient to allow the minimum embedment to be made into the receiving substrate.
D. CMU: Concrete Masonry Unit.

TABLE OF CONTENTS

SHEET	REV.	SHEET DESCRIPTION
1	---	GENERAL AND INSTALLATION NOTES
2	---	ANCHOR LAYOUT & DP TABLE
3	---	ANCHORAGE LIMITATIONS DP TABLES
4	---	VERTICAL SECTIONS & CORNER DETAIL
5	---	VERTICAL SECTIONS
6	---	HORIZONTAL SECTIONS
7	---	COMPONENTS, BOM & GLAZING DETAILS

REV	DESCRIPTION	DATE	BY

APPROVED BY: RJA DATE: 06/04/09

FLORIDA EXTRUDERS INTERNATIONAL, INC.
2540 JEWETT LANE
SANFORD, FLORIDA 32771-1687

TITLE: MILESTONE SERIES 5000 ALUMINUM SH WINDOWS GENERAL AND INSTALLATION NOTES

DRAWN BY: C.D. | DATE: 07/20/09
SCALE: N.T.S. | DRAWING NO. FEI0002
REV: - | SHEET: 1 OF 7

PREPARED BY:
PTC, LLC
Phone 321.690.1788
Fax 321.690.1789

PROJECT #309-0210

Robert J. Amoruso, P.E.
FL License nn. 49752

PTC, LLC
1535 N. Cogswell Street, Suite C25
Rockledge, Florida 32955
FBPE Certificate of Authorization NO. 25935

Approved as complying with the Florida Building Code
Date NOV. 18, 2009
NOA# 09-0723.07
Miami-Dade Product Control Division
By:

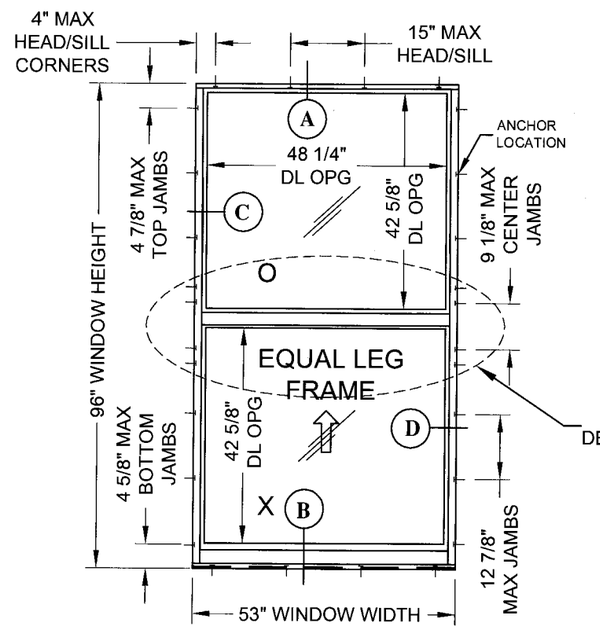

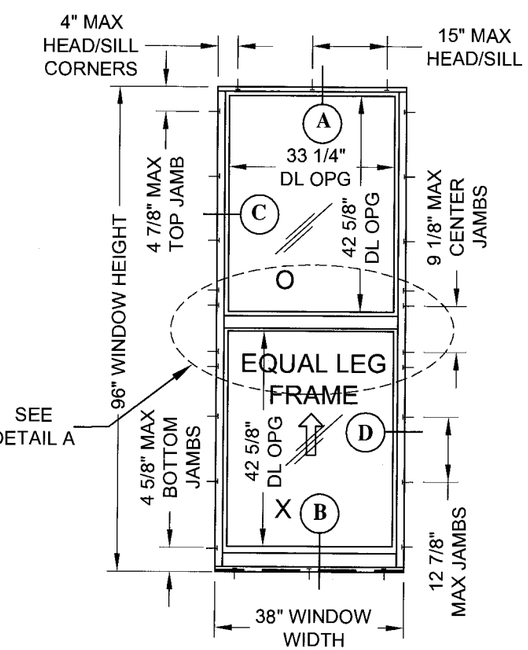

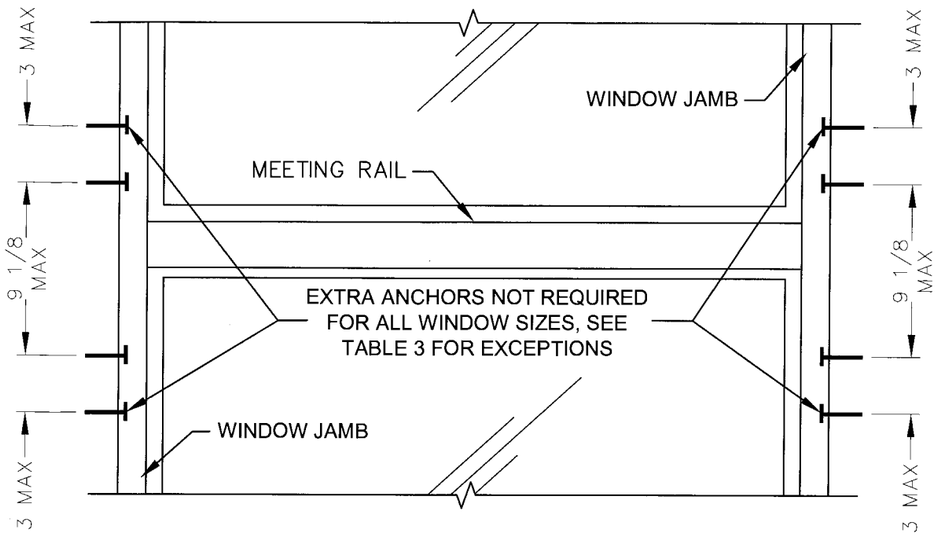

DETAIL "A"

ENHANCED MEETING RAIL ANCHORAGE
(NTS) REQUIRED ON ALL SIZES WITH BUCK
HEIGHT 30 1/2" AND GREATER.

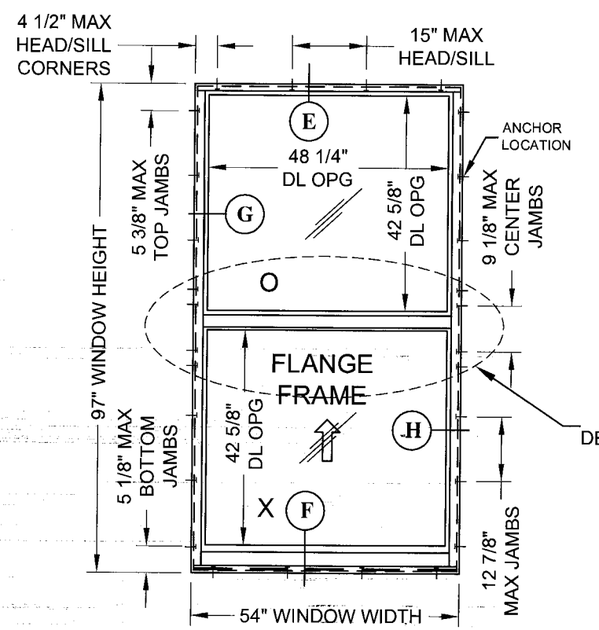

ELEVATION 1

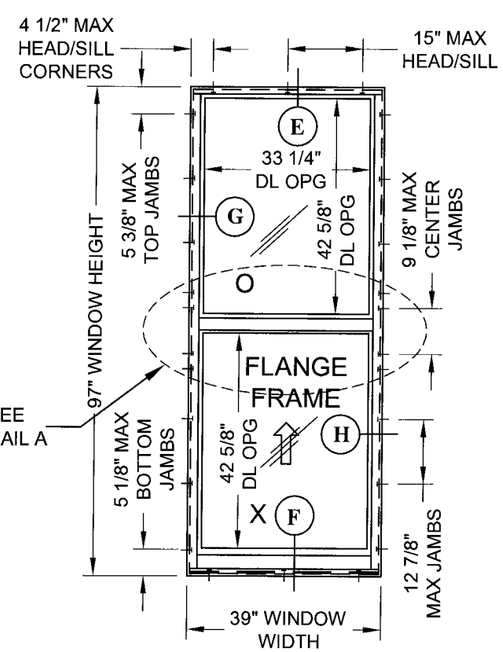

ELEVATION 2

Table 2 - Design Pressure (psf) for Small Missile Impact

Elevation	Window Size based on Buck Width and Height (in)		Design Pressure (psf) Concrete/Masonry, Wood and Mullion Substrates (see Table 3 for exceptions)		Impact Rating
	Width	Height	Lami	Lami+IG	
1	> 38" to 53"	up to 96"	110	110	Small Missile Impact
2	up to 38"	up to 96"	110	110	

NOTES:

1- FOR EQUAL LEG WINDOWS, BUCK DIMENSIONS ARE THE SAME AS WINDOW DIMENSIONS.
2- FOR FLANGE WINDOWS, BUCK DIMENSIONS ARE 1" LESS THAN WINDOW DIMENSIONS.
3- ELEVATIONS ARE VIEWED FROM EXTERIOR.
4- SCREENS ARE NOT SHOWN FOR CLARITY.
5- ALL DIMENSIONS ARE IN INCHES.
6- DL OPG: DAY LIGHT OPENING.
7- ANCHOR LOCATION SPACINGS SHOWN FOR THE JAMBS ARE THE SAME FOR A WALL OR A MULLION.

REV	DESCRIPTION	DATE	BY

APPROVED BY: RJA DATE: 06/04/09

FLORIDA EXTRUDERS INTERNATIONAL, INC.
2540 JEWETT LANE
SANFORD, FLORIDA 32771-1687

TITLE: MILESTONE SERIES 5000 ALUMINUM SH WINDOWS
ANCHOR LAYOUT & DP TABLE

DRAWN BY: C.D. | DATE: 07/20/09
SCALE: 1:30 | DRAWING NO: FEI0002
REV: - | SHEET: 2 OF 7

PREPARED BY:
PTC, LLC
Phone 321.690.1788
Fax 321.690.1789

PROJECT #309-0210

Robert J. Amoruso, P.E.
FL. License no.: 49752
7/28/09

PTC, LLC
1535 N. Cogswell Street, Suite C25
Rockledge, Florida 32955
FBPE Certificate of Authorization NO. 25935

Approved as complying with the Florida Building Code
Date NOV. 18 2009
NOA# 09-0723.07
Miami Dade Product Control Division
By

TABLES 3A TO 3E - WINDOW SIZES WITH LIMITATIONS IN DESIGN PRESSURE DUE TO ANCHORAGE.

Table 3A - Commodity Sized Windows in Concrete/Masonry
Design Pressure (DP) (psf) limited by Anchorage

Concrete & Filled CMU			CMU		
Buck Sizes		DP (psf)	Buck Sizes		DP (psf)
BW	BH		BW	BH	
No anchor limitations to DP.		110 psf (from Table 2)	> 52-1/8 to 53	> 95 to 96	95
				> 83 to 95	96
				> 71 to 83	104
			> 47 to 52-1/8	> 95 to 96	97
				> 83 to 95	98
				> 71 to 83	106
			No anchor limitations to DP for sizes smaller then those above.		110 psf (from Table 2)

Table 3B - Modular Sized Windows in Concrete/Masonry
Design Pressure (DP) (psf) limited by Anchorage

Concrete & Filled CMU			CMU		
Buck Sizes		DP (psf)	Buck Sizes		DP (psf)
BW	BH		BW	BH	
No anchor limitations to DP.		110 psf (from Table 2)	> 52-1/8 to 53	> 95-1/2 to 96	95
				> 83-1/2 to 95-1/2	96
				> 71-1/2 to 83-1/2	103
			> 47-1/2 to 52-1/8	> 95-1/2 to 96	97
				> 83-1/2 to 95-1/2	98
				> 71-1/2 to 83-1/2	106
			No anchor limitations to DP for sizes smaller then those above.		110 psf (from Table 2)

Table 3C - Commodity & Modular Sized Windows Jamb to Mullion
Design Pressure (DP) (psf) limited by Anchorage

Buck Sizes		DP (psf)
BW	BH	
No anchor limitations to DP.		110 psf (from Table 2)

Table 3D - Commodity Sized Windows in Wood Substrates
Design Pressure (DP) (psf) limited by Anchorage

Buck Sizes		DP (psf)	Buck Sizes		DP (psf)
BW	BH		BW	BH	
53	96	61	47	96	75
53	95	61	47	95	75
53	83	66	47	83	79
53	72	73	47	72	85
53	71	73	47	71	85
53	62	78	47	62	92
53	55 1/4	86	47	55 1/4	99
53	49 5/8	94	47	49 5/8	107
53	43 3/4	100	47	43 3/4	110
53	37 3/8	110	47	37 3/8	110
53	30 1/2	110	47	30 1/2	110
53	25	* 85	47	25	* 96
52 1/8	96	62	38	96	97
52 1/8	95	63	38	95	103
52 1/8	83	68	38	> 71 to 83	106
52 1/8	72	75	38	25 to 71	110
52 1/8	71	75	36	> 95 to 96	105
52 1/8	62	80	36	25 to 95	110
52 1/8	55 1/4	88	No anchor limitations to DP for sizes smaller then those above.		110 psf (from Table 2)
52 1/8	49 5/8	96			
52 1/8	43 3/4	101			
52 1/8	37 3/8	110			
52 1/8	30 1/2	110			
52 1/8	25	* 87			

Table 3E - Modular Sized Windows in Wood Substrates
Design Pressure (DP) (psf) limited by Anchorage

Buck Sizes		DP (psf)	Buck Sizes		DP (psf)
BW	BH		BW	BH	
53	96	61	43 1/2	96	80
53	95 1/2	61	43 1/2	95 1/2	81
53	83 1/2	66	43 1/2	83 1/2	86
53	71 1/2	73	43 1/2	71 1/2	94
53	59 1/2	81	43 1/2	59 1/2	102
53	51 1/2	91	43 1/2	30-1/2 to 51-1/2	110
53	47 1/2	98	43 1/2	27 1/2	* 96
53	43 1/2	100	39 1/2	96	92
53	35 1/2	110	39 1/2	95 1/2	92
53	30 1/2	110	39 1/2	83 1/2	98
53	27 1/2	* 78	39 1/2	71 1/2	106
47 1/2	96	71	39 1/2	30-1/2 to 59-1/2	110
47 1/2	95 1/2	71	39 1/2	27 1/2	* 105
47 1/2	83 1/2	76	35 1/2	> 83 1/2 to 96	107
47 1/2	71 1/2	84	No anchor limitations to DP for sizes smaller then those above.		110 psf (from Table 2)
47 1/2	59 1/2	92			
47 1/2	51 1/2	103			
47 1/2	30-1/2 to 47-1/2	110			
47 1/2	27 1/2	* 87			

* SIZES WITH BUCK HEIGHT (BH) LESS THAN 30 1/2" DO NOT HAVE SPACE FOR ENHANCED ANCHORAGE AT THE MEETING RAILS, THEREFORE THE DESIGN PRESSURE (DP) IS LOWER THAN THE NEXT LARGEST WINDOW. AT 30 1/2" BH OR LARGER, WINDOWS ARE FABRICATED AND INSTALLED WITH ENHANCED ANCHORAGE AT MEETING RAILS.

NOTES:
1- FOR EQUAL LEG WINDOWS, BUCK DIMENSIONS ARE THE SAME AS WINDOW DIMENSIONS.
2- FOR FLANGE WINDOWS, BUCK DIMENSIONS ARE 1" LESS THAN WINDOW DIMENSIONS.
3- BW: BUCK WIDTH, BH: BUCK HEIGHT
4- DP: DESIGN PRESSURE
5- CMU: CONCRETE MASONRY UNIT

APPROVED BY: RJA
DATE: 06/04/09

REV	DESCRIPTION	DATE	BY

FLORIDA EXTRUDERS INTERNATIONAL, INC.
2540 JEWETT LANE
SANFORD, FLORIDA 32771-1687

TITLE: MILESTONE SERIES 5000 ALUMINUM SH WINDOWS ANCHORAGE LIMITATIONS DP TABLES

PREPARED BY: PTC, LLC
Phone 321.690.1788
Fax 321.690.1789

DRAWN BY: C.D.
DATE: 07/20/09
SCALE: VARIES
DRAWING NO: FEI0002
REV: -
SHEET: 3 OF 7

PROJECT #309-0210

Robert J. Amoruso, P.E.
FL. License no. 49752
7/20/09

PTC, LLC
1535 N. Cogswell Street, Suite C25
Rockledge, Florida 32955
FBPE Certificate of Authorization NO. 25935

Approved as complying with the Florida Building Code
Date NOV 18 2009
NOA# 09-0723.07
Miami Dade Product Control Division
By

A VERTICAL SECTION
CONCRETE / MASONRY SUBSTRATE
WITH EQUAL LEG FRAME

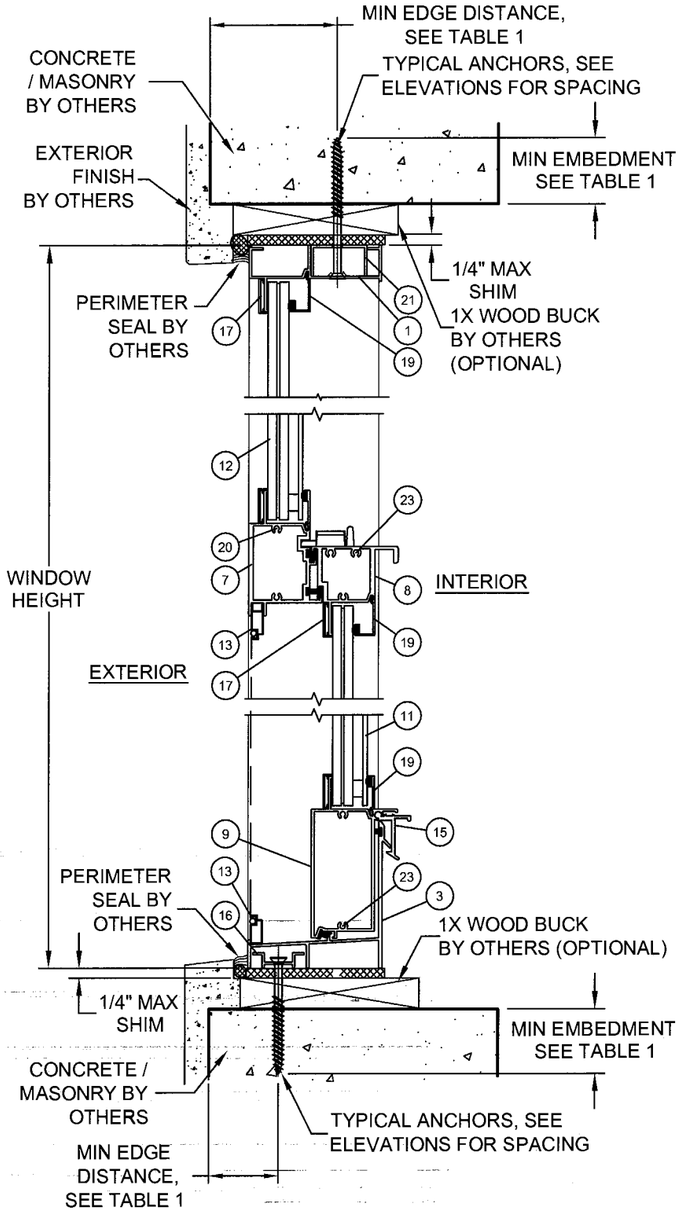

B VERTICAL SECTION
CONCRETE/MASONRY SUBSTRATE
WITH EQUAL LEF FRAME

A VERTICAL SECTION
WOOD FRAME SUBSTRATE
WITH EQUAL LEG FRAME

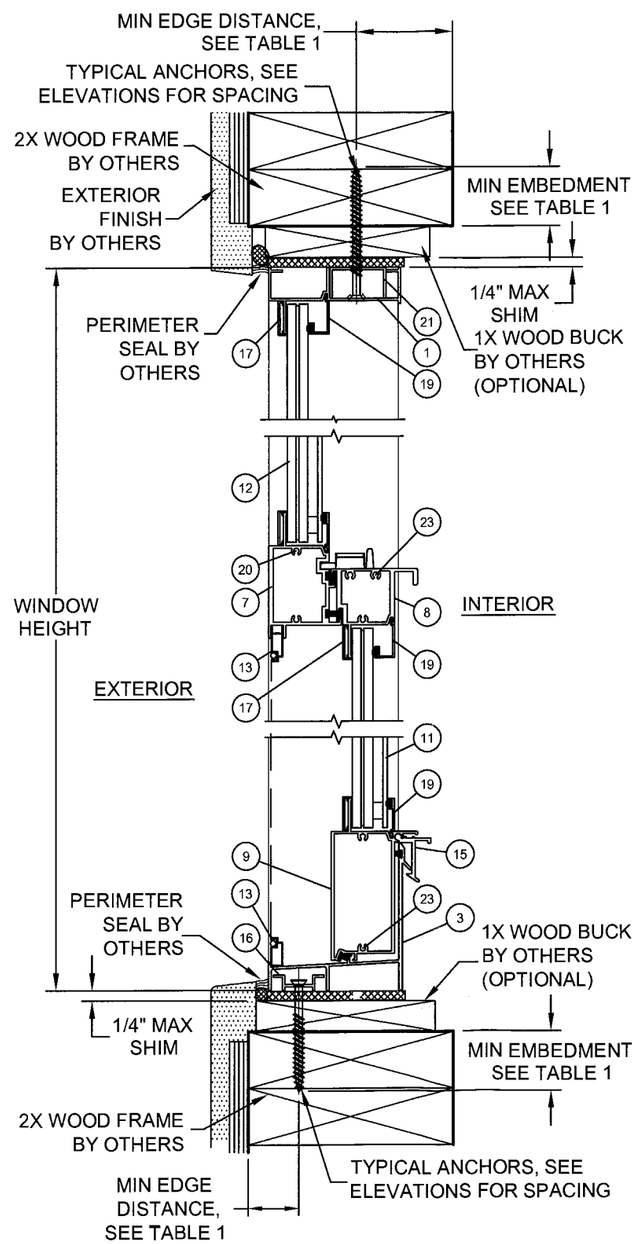

B VERTICAL SECTION
WOOD FRAME SUBSTRATE
WITH EQUAL LEG FRAME

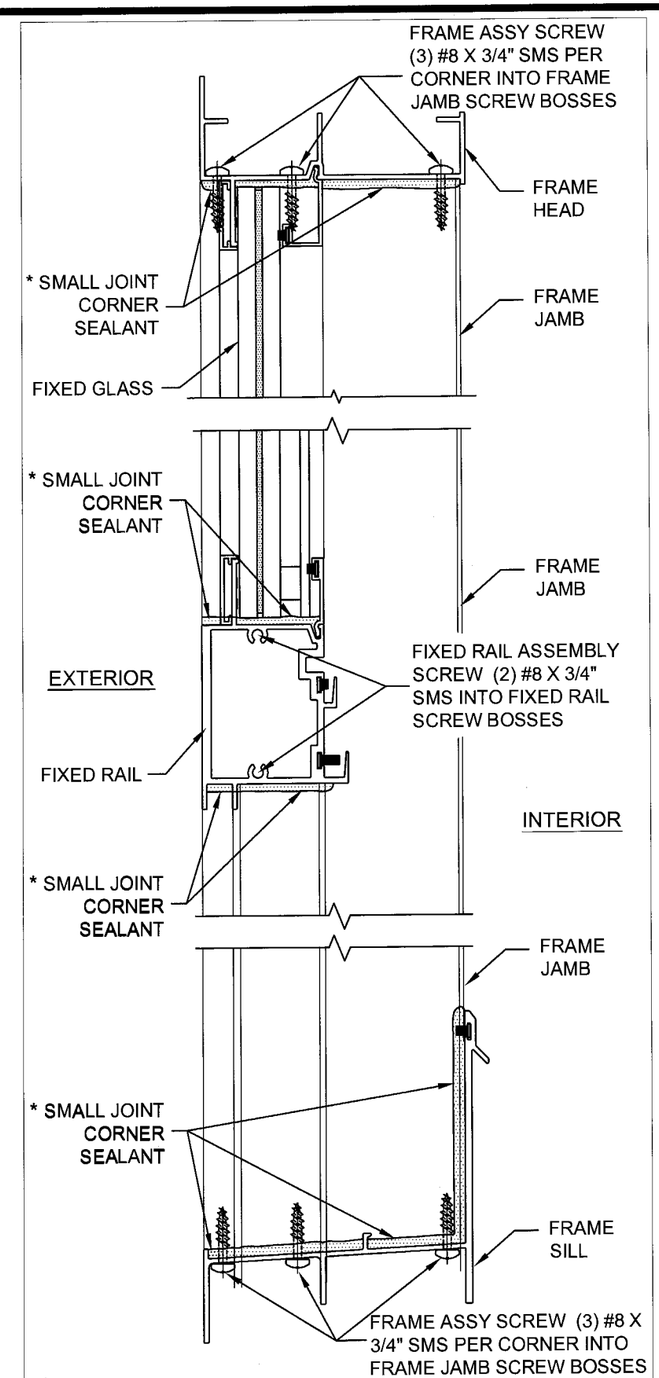

* CORNER SEALANT APPLIED IN THE FACTORY IS INSTALLED ON THE EXTERIOR SURFACE OF THE FRAME JOINTS. AFTER WINDOW INSTALLATION THE SEALANT MAY NOT BE VISIBLE.

FLANGE FRAME CORNER DETAIL
SIMILAR FOR EQUAL LEG FRAME

REV	DESCRIPTION	DATE	BY

APPROVED BY: RJA DATE: 06/04/09

FLORIDA EXTRUDERS INTERNATIONAL, INC.
2540 JEWETT LANE
SANFORD, FLORIDA 32771-1687

TITLE: MILESTONE SERIES 5000 ALUMINUM SH WINDOWS VERTICAL SECTIONS & CORNER DETAIL

PREPARED BY: PTC, LLC Phone 321.690.1788 Fax 321.690.1789

DRAWN BY: C.D. | DATE: 07/20/09
SCALE: 1:4 | DRAWING NO: FEI0002
REV: - | SHEET: 4 OF 7

PROJECT #309-0210

Robert J. Amoruso, P.E.
FL. License no. 49752

7/20/09

PTC, LLC
1535 N. Cogswell Street, Suite C25
Rockledge, Florida 32955
FBPE Certificate of Authorization NO. 25935

Approved as complying with the Florida Building Code
Date NOV. 18 2009
NOA# 09-0723.07
Miami Dade Product Control
Division
By

E VERTICAL SECTION
CONCRETE / MASONRY SUBSTRATE
WITH FLANGE FRAME

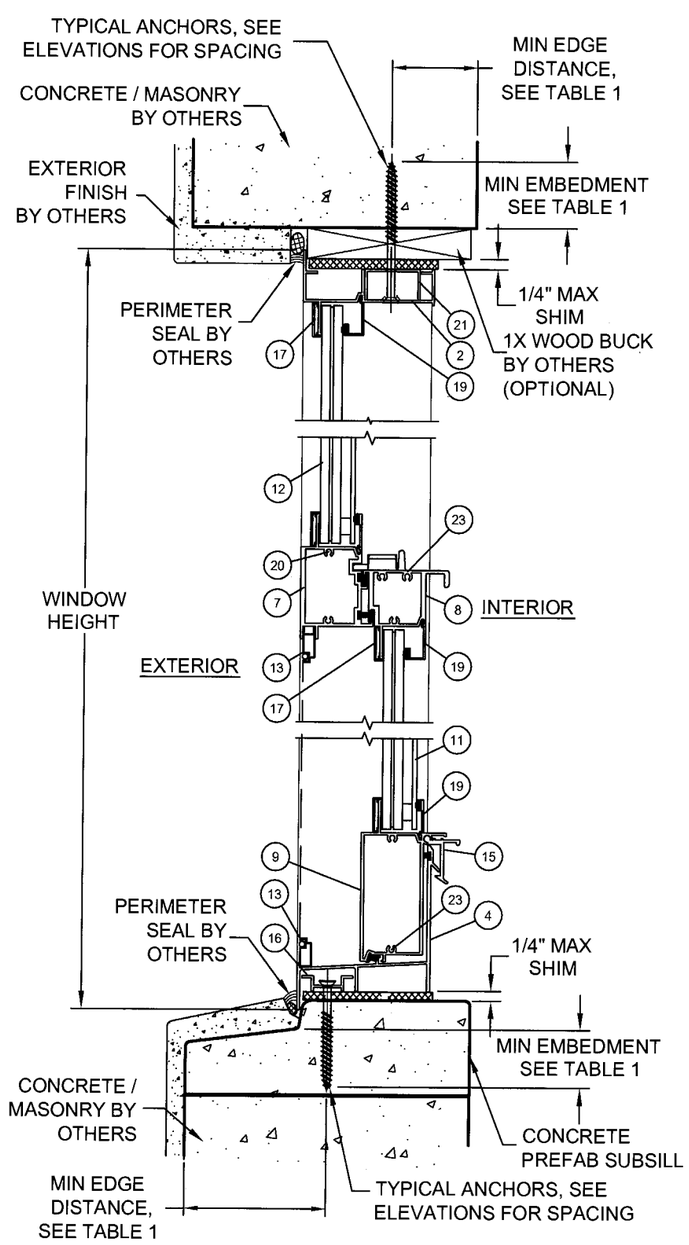

F VERTICAL SECTION
CONCRETE/MASONRY SUBSTRATE
WITH FLANGE FRAME

E VERTICAL SECTION
WOOD FRAME SUBSTRATE
WITH FLANGE FRAME

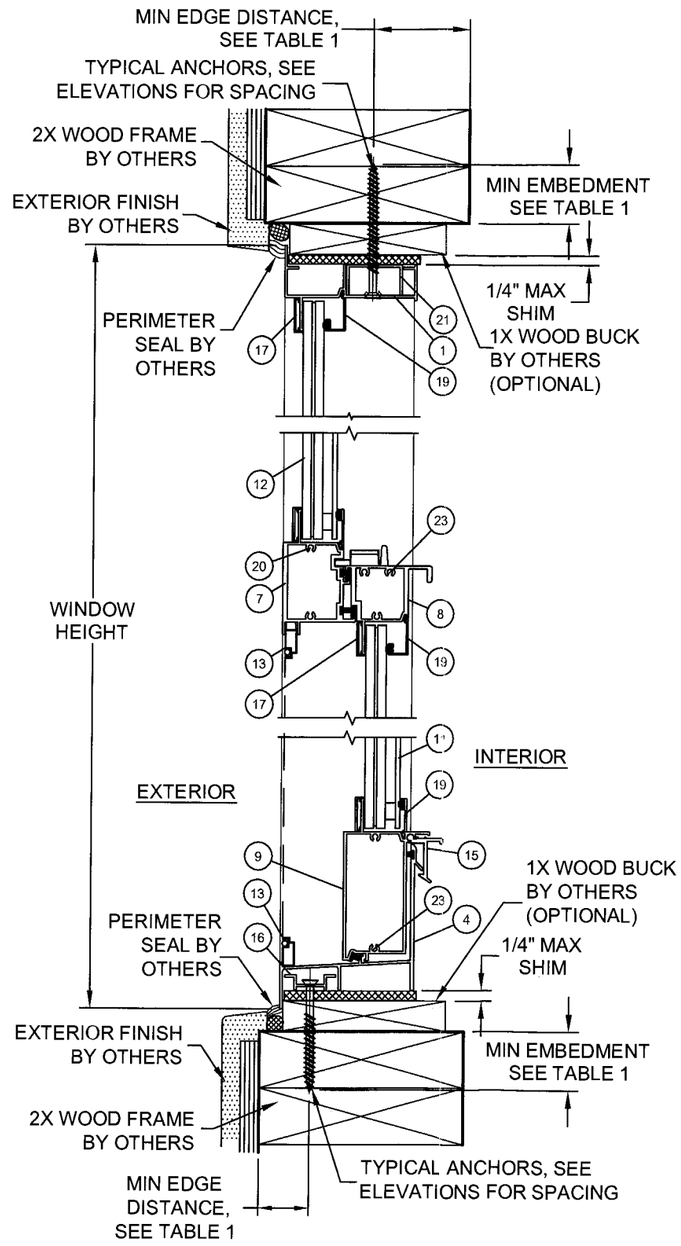

F VERTICAL SECTION
WOOD FRAME SUBSTRATE
WITH FLANGE FRAME

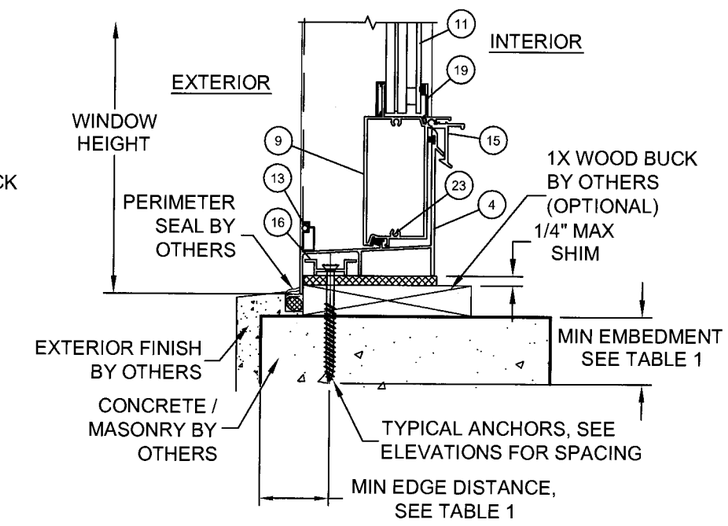

F VERTICAL SECTION
CONCRETE/MASONRY SUBSTRATE
WITH FLANGE FRAME

REV	DESCRIPTION	DATE	BY

APPROVED BY: RJA
DATE: 06/04/09

FLORIDA EXTRUDERS INTERNATIONAL, INC.
2540 JEWETT LANE
SANFORD, FLORIDA 32771-1687

TITLE: MILESTONE SERIES 5000 ALUMINUM SH WINDOWS VERTICAL SECTIONS

PREPARED BY: PTC, LLC Phone 321.690.1788 Fax 321.690.1789

DRAWN BY: C.D.
DATE: 06/04/09
SCALE: 1:4
DRAWING NO: FEI0002
REV: -
SHEET: 5 OF 7

PROJECT #309-0210

Robert J. Amoruso, P.E.
FL. License no. 49752

7/20/09

PTC, LLC
1535 N. Cogswell Street, Suite C25
Rockledge, Florida 32955
FBPE Certificate of Authorization NO. 25935

Approved as complying with the Florida Building Code
Date NOV. 18, 2009
NOA# 09-0723.07
Miami Dade Product Control
Division
By

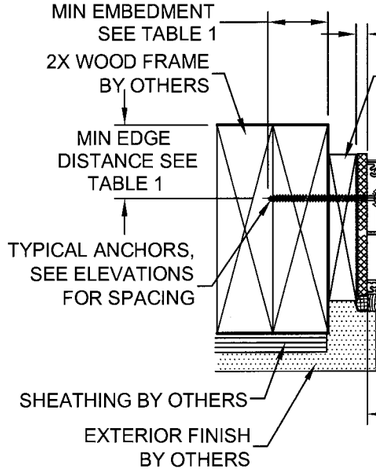

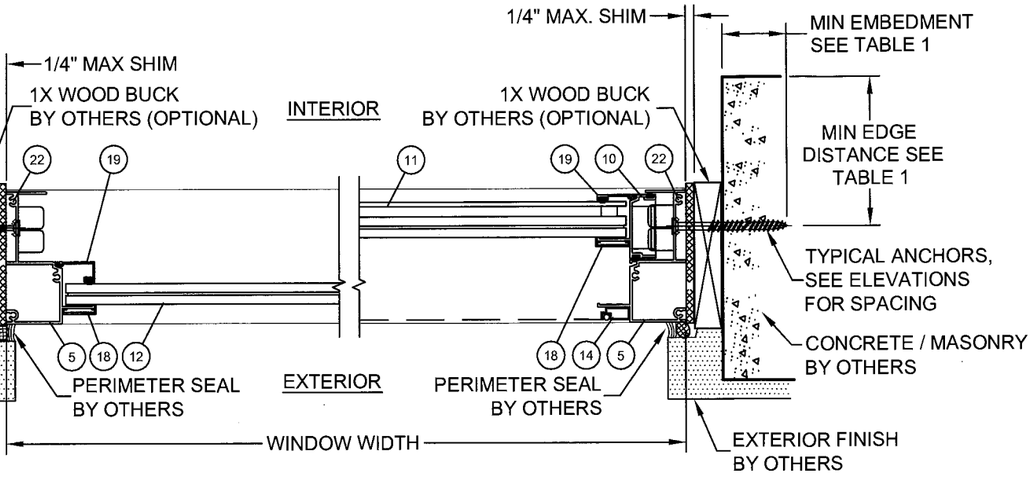

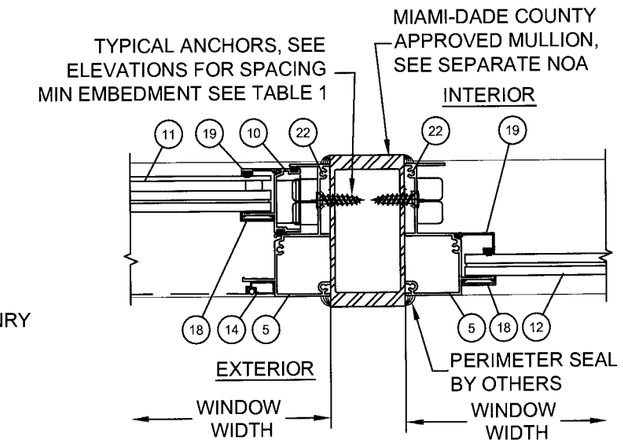

C HORIZONTAL SECTION
WOOD FRAME SUBSTRATE
WITH EQUAL LEG FRAME

D HORIZONTAL SECTION
CONCRETE / MASONRY SUBSTRATE
WITH EQUAL LEG FRAME

HORIZONTAL SECTION
2x4 ALUMINUM TUBE MULLION
WITH EQUAL LEG FRAME

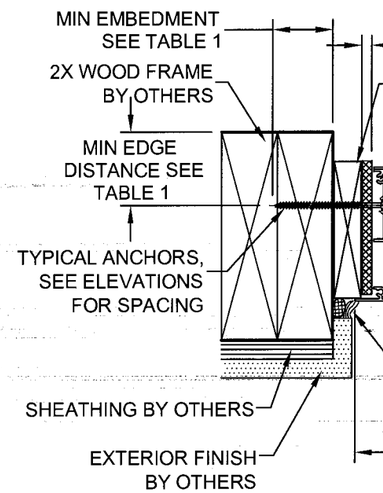

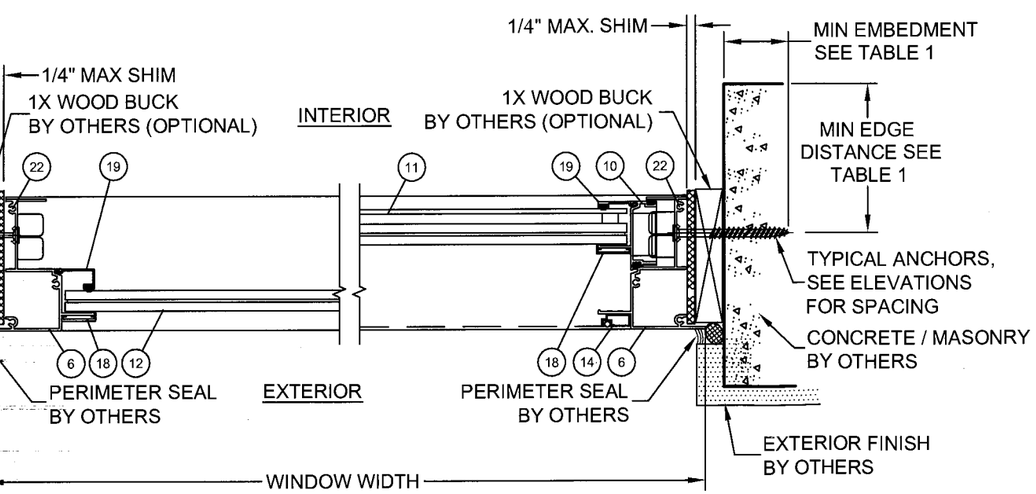

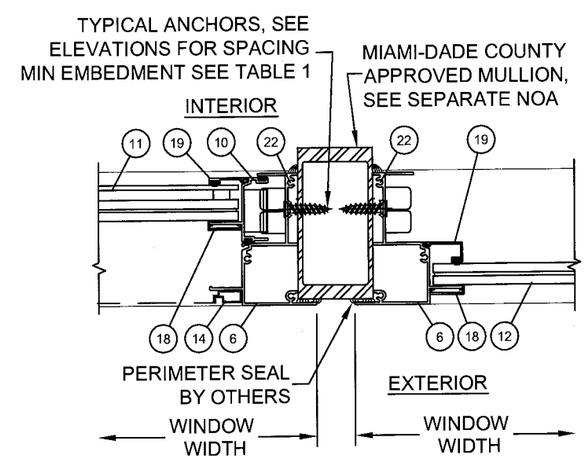

G HORIZONTAL SECTION
WOOD FRAME SUBSTRATE
WITH FLANGE FRAME

H HORIZONTAL SECTION
CONCRETE / MASONRY SUBSTRATE
WITH FLANGE FRAME

HORIZONTAL SECTION
2x4 ALUMINUM TUBE MULLION
WITH FLANGE FRAME

REV	DESCRIPTION	DATE	BY

APPROVED BY: RJA
DATE: 06/04/09

FLORIDA EXTRUDERS INTERNATIONAL, INC.
2540 JEWETT LANE
SANFORD, FLORIDA 32771-1687

TITLE: MILESTONE SERIES 5000 ALUMINUM SH WINDOWS
HORIZONTAL SECTIONS

DRAWN BY: C.D.
DATE: 07/20/09
SCALE: 1:4
DRAWING NO: FEI0002
REV: -
SHEET: 6 OF 7

PREPARED BY:
PTC, LLC
Phone 321.690.1788
Fax 321.690.1789

PROJECT #309-0210

Robert J. Amoruso, P.E.
FL. License no. 49752

7/20/09

PTC, LLC
1535 N. Cogswell Street, Suite C25
Rockledge, Florida 32955
FBPE Certificate of Authorization NO. 25935

Approved as complying with the Florida Building Code
Date NOV 18 2009
NOA# 09-0773.07
Miami Dade Product Control Division
By

① FRAME HEAD-EQ LEG

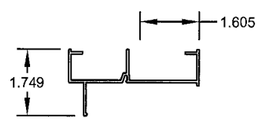

② FRAME HEAD-FLANGE

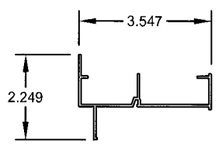

③ FRAME SILL-EQ LEG

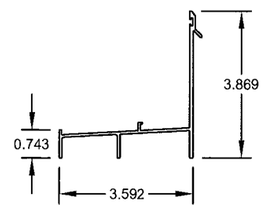

④ FRAME SILL-FLANGE

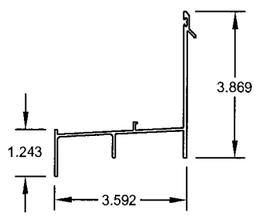

⑤ FRAME JAMB-EQ LEG

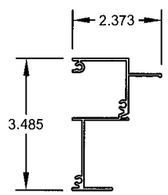

⑥ FRAME JAMB-FLANGE

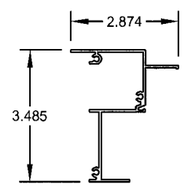

⑦ FIXED RAIL

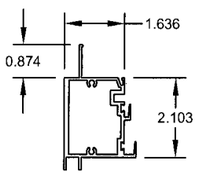

⑧ MEETING RAIL

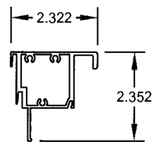

⑨ HIGH LIFT RAIL

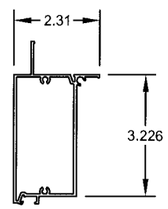

⑩ SASH JAMB

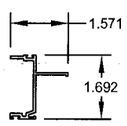

⑮ SILL LOCK (OPTIONAL)

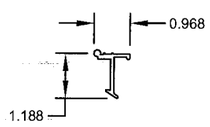

⑯ SILL RETAINER

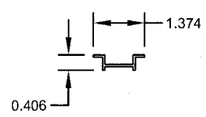

⑰⑱ MUNTIN ADAPTOR HORIZONTAL OR VERTICAL

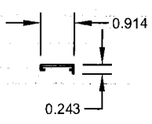

⑲ GLAZING BEAD HORIZONTAL OR VERTICAL FOR 9/16" GLASS

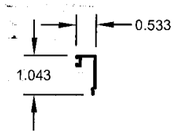

⑲ GLAZING BEAD HORIZONTAL OR VERTICAL FOR 1" INSULATED GLASS

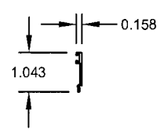

㉑ FRAME HEAD OR SILL FILLER

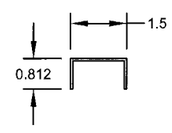

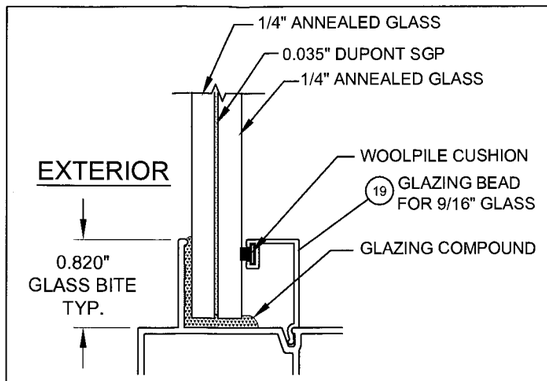

9/16" LAMI GLAZING DETAIL
FOR ELEVATION 1 & 2

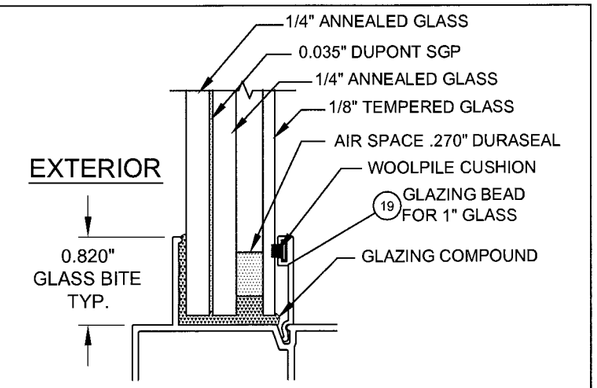

1" LAMI+IG GLAZING DETAIL
FOR ELEVATION 1 & 2

NOTES:
LAMI: LAMINATED GLASS
IG: INSULATED GLASS

COMPONENTS
SCALE: 1: 4

BILL OF MATERIALS

ITEM #	PART DESCRIPTION	PART # OR FEI DWG NO.	MATERIAL
1	FRAME HEAD-EQ LEG	FE 5900	ALUM. EXTRUSION (6063-T6)
2	FRAME HEAD-FLANGE	FE 5907	ALUM. EXTRUSION (6063-T6)
3	FRAME SILL-EQ LEG	FE 5901	ALUM. EXTRUSION (6063-T6)
4	FRAME SILL-FLANGE	FE 5908	ALUM. EXTRUSION (6063-T6)
5	FRAME JAMB-EQ LEG	FE 5902	ALUM. EXTRUSION (6063-T6)
6	FRAME JAMB-FLANGE	FE 5909	ALUM. EXTRUSION (6063-T6)
7	FIXED RAIL	FE 5903	ALUM. EXTRUSION (6063-T6)
8	MEETING RAIL	FE 5904	ALUM. EXTRUSION (6063-T6)
9	HIGH LIFT RAIL	FE 5905	ALUM. EXTRUSION (6063-T6)
10	SASH JAMB	FE 5906	ALUM. EXTRUSION (6063-T6)
11	SASH GLASS	NA	SEE GLAZING DETAILS
12	FIXED GLASS	NA	SEE GLAZING DETAILS
13	SCREEN HEAD & SILL	ROLLFORM	
14	SCREEN JAMB	ROLLFORM	
15	SILL LOCK (OPTIONAL)	FE 5031	ALUM. EXTRUSION (6063-T6)
16	SILL RETAINER	FE 5910	ALUM. EXTRUSION (6063-T6)
17	MUNTIN ADAPTER HORIZONTAL	FE 5911	ALUM. EXTRUSION (6063-T6)
18	MUNTIN ADAPTER VERTICAL	FE 5911	ALUM. EXTRUSION (6063-T6)
19	9/16" GLAZING BEAD	FE 5914	ALUM. EXTRUSION (6063-T6)
	1" GLAZING BEAD	FE 5912	ALUM. EXTRUSION (6063-T6)
20	FIXED RAIL ASSY SCREW	NA	#8 x 3/4" PN SMS SS
21	FRAME HEAD FILLER	FE 5922	ALUM. EXTRUSION (6063-T6)
22	FRAME ASSY SCREW	NA	#8 x 3/4" PN SMS SS
23	SASH ASSY SCREW	NA	#8 x 3/4" PN SMS SS

REV	DESCRIPTION	DATE	BY

APPROVED BY: RJA
DATE: 06/04/09

FLORIDA EXTRUDERS INTERNATIONAL, INC.
2540 JEWETT LANE
SANFORD, FLORIDA 32771-1687

TITLE: MILESTONE SERIES 5000 ALUMINUM SH WINDOWS COMPONENTS, BOM & GLAZING DETAILS

DRAWN BY: C.D.
DATE: 07/20/09
SCALE: VARIES
DRAWING NO: FEI0002
REV: -
SHEET: 7 OF 7

PREPARED BY:
PTC, LLC
Phone 321.690.1788
Fax 321.690.1789

PROJECT #309-0210

Robert J. Amoriso P.E.
FL. License no. 46752

PTC, LLC
1535 N. Cogswell Street, Suite C25
Rockledge, Florida 32955
FBPE Certificate of Authorization NO. 25935

As approved as complying with the Florida Building Code
Date NOV. 18, 2009
NOA# 09-0723.07
Miami Dade Product Control
By