MIAMI-DADE COUNTY, FLORIDA
METRO-DADE FLAGLER BUILDING

BUILDING CODE COMPLIANCE OFFICE (BCCO)
PRODUCT CONTROL DIVISION

140 WEST FLAGLER STREET, SUITE 1603
MIAMI, FLORIDA 33130-1563
(305) 375-2901 FAX (305) 375-2908
www.miamidade.gov

NOTICE OF ACCEPTANCE (NOA)

Willard Shutter Company, Inc.
4420 N.W. 35th Court
Miami, FL 33142

SCOPE:
This NOA is being issued under the applicable rules and regulations governing the use of construction materials. The documentation submitted has been reviewed by Miami-Dade County Product Control Division and accepted by the Board of Rules and Appeals (BORA) to be used in Miami Dade County and other areas where allowed by the Authority Having Jurisdiction (AHJ).

This NOA shall not be valid after the expiration date stated below. The Miami-Dade County Product Control Division (In Miami Dade County) and/or the AHJ (in areas other than Miami Dade County) reserve the right to have this product or material tested for quality assurance purposes. If this product or material fails to perform in the accepted manner, the manufacturer will incur the expense of such testing and the AHJ may immediately revoke, modify, or suspend the use of such product or material within their jurisdiction. BORA reserves the right to revoke this acceptance, if it is determined by Miami-Dade County Product Control Division that this product or material fails to meet the requirements of the applicable building code.
This product is approved as described herein, and has been designed to comply with the Florida Building Code including the High Velocity Hurricane Zone.

DESCRIPTION: Extruded Aluminum Roll-Up Shutter

APPROVAL DOCUMENT: Drawing No. 09-136, titled "ASSA/60mm. Bertha Roll-Up ", prepared by Tilteco, Inc. dated July 14, 2009, last revision #1 dated July 14, 2009, sheets 1 through 14 of 14 including 1A, 5A, 5B, signed and sealed by Walter A. Tillit Jr., P.E., bearing the Miami-Dade County Product Control revision stamp with the Notice of Acceptance number and the expiration date by the Miami-Dade County Product Control Division.

MISSILE IMPACT RATING: Large and Small Missile Impact

LABELING: Each unit shall bear a permanent label with the manufacturer's name or logo, city, state and the following statement: "Miami-Dade County Product Control Approved", unless otherwise noted herein.

RENEWAL of this NOA shall be considered after a renewal application has been filed and there has been no change in the applicable building code negatively affecting the performance of this product.

TERMINATION of this NOA will occur after the expiration date or if there has been a revision or change in the materials, use, and/or manufacture of the product or process. Misuse of this NOA as an endorsement of any product, for sales, advertising or any other purposes shall automatically terminate this NOA. Failure to comply with any section of this NOA shall be cause for termination and removal of NOA.

ADVERTISEMENT: The NOA number preceded by the words Miami-Dade County, Florida, and followed by the expiration date may be displayed in advertising literature. If any portion of the NOA is displayed, then it shall be done in its entirety.

INSPECTION: A copy of this entire NOA shall be provided to the user by the manufacturer or its distributors and shall be available for inspection at the job site at the request of the Building Official.
This **NOA revises & renews NOA # 04-0714.07** and consists of this page 1 and evidence submitted pages E-1 & E-2 as well as approval document mentioned above.
The submitted documentation was reviewed by **Helmy A. Makar, P.E., M.S.**

MIAMI-DADE COUNTY APPROVED

Helmy A. Makar
02/17/2010

NOA No. : 09-0730.02
Expiration Date: 09/09/2014
Approval Date: 02/17/2010

Willard Shutter Company, Inc.

NOTICE OF ACCEPTANCE: EVIDENCE SUBMITTED

1. EVIDENCE SUBMITTED UNDER PREVIOUS APPROVAL # 04-0714.07

A. DRAWING

1. *Drawing No. 04-085, titled "60 mm Slat Roll-Up Shutters", Sheets 1 through 14 including 5A of 14,prepared by Tilteco, Inc., dated 06/29/04, with no revisions on, signed and sealed by Walter A.Tillit Jr., PE.*

B. TEST

1. *Test report on Large Missile Impact Test per PA 201, Cyclic Wind Pressure Test per PA 203 and Uniform Static Air Pressure Test per PA 202, of "Series: 60mm; Aluminum Roll Up Shutter", prepared by Fenestration Testing Laboratory, Inc., Report No. 2751, dated 08/24/2000, signed and sealed by A. Acevedo, PE.*
2. *Test report on Large Missile Impact Test per PA 201of "Aluminum Storm Bar", prepared by Fenestration Testing Laboratory, Inc., Report No. 2760, dated 08/31/2000, signed and sealed by A. Acevedo, PE.*

C. CALCULATIONS

1. *Comparative analysis for slats; storm bars, headers and anchors using rational analysis dated 09/14/00, pages 1 through 167 of 167, prepared by Tilteco Inc., signed and sealed by W. A. Tillit Jr., PE. on 04/06/01.*

D. MATERIAL CERTIFICATION

1. *Tensile Test Report No. 13974.0001, per ASTM B 557, prepared by ATC Associates, Inc. dated 09/20/00, signed and sealed by S.E. black, PE.*

E. STATEMENTS

1. *Letter of Code Compliance issued by Tilteco, Inc., on 04/04/2001, signed and sealed by W. Tillit Jr., PE.*
2. *No-financial interest letter issued by Tilteco, Inc., on 04/04/2001, signed and sealed by W. Tillit Jr., PE.*
3. *Test compliance letter issued by Fenestration Testing Laboratory, Inc. on 04/30/2001, signed and sealed by A. Acevedo, PE.*
4. *Relinquishing test letter issued by Weather Guard, Inc. on 04/06/2001, signed by D. D. Thomas.*
5. *Advise of purchase letter issued by American Shutter Systems Association, Inc, on 04/09/2001, signed by W. Feeley.*
6. *Acknowledge letter issued by Willard Shutter Company issued on 06/24/04 and signed by W. E. Clark.*
7. *Release letter issued by ASSA Inc issued by 06/28/04 and signed by L. Santana.*

Helmy A. Makar, P.E., M.S.
Senior Product Control Examiner
NOA No. : 09-0730.02
Expiration Date: 09/09/2014
Approval Date: 02/17/2010

NOTICE OF ACCEPTANCE: EVIDENCE SUBMITTED

2. NEW EVIDENCE SUBMITTED

A. DRAWING

1. *Drawing No. 09-136, titled "ASSA/60mm. Bertha Roll-Up ", prepared by Tilteco, Inc. dated July 14, 2009, last revision #1 dated July 14, 2009, sheets 1 through 14 of 14 including 1A, 5A, 5B, signed and sealed by Walter A. Tillit Jr., P.E.*

B. TESTS

1. *See Association's generic approval under 09-0687.*

C. CALCULATIONS:

1. *See Association's generic approval under 09-0687.*

D. QUALITY CONTROL

1. *By Miami-Dade County Building Code Compliance Office.*

E. MATERIAL CERTIFICATION:

1. *See Association's generic approval under 09-0687.*

F. STATEMENTS

1. *Release letter issued by American Shutter System Association, dated January 13, 2010, certifying this product to meet the criteria of product tested and approved, and allowing Willard Shutter Co., Inc. to use the test results approved under Miami-Dade County Approval No. 09-0687, signed by Legny rodriguez.*
2. *Acknowledgment letter by Willard Shutter Co., Inc., dated January 13, 2010, signed by Micheal S. Woods.*
3. *Letter issued by Tilteco, Inc., dated January 13, 2010, certifying that the drawing (No. 09-136) prepared for Willard Shutter Co., Inc., signed and sealed by Walter A. Tillit Jr., P.E. is engineering wise identical to American Shutter System Association generic drawing.*

Helmy A. Makar, P.E., M.S.
Senior Product Control Examiner
NOA No. : 09-0730.02
Expiration Date: 09/09/2014
Approval Date: 02/17/2010

GENERAL NOTES:

1. ASSA/60mm BERTHA ROLL-UP SHOWN ON THIS PRODUCT APPROVAL DOCUMENT (P.A.D.) HAS BEEN VERIFIED FOR CODE COMPLIANCE IN ACCORDANCE WITH THE 2007 EDITION OF THE FLORIDA BUILDING CODE. THIS ROLL-UP SHUTTER MAY BE INSTALLED AT HIGH VELOCITY HURRICANE ZONES (MIAMI-DADE / BROWARD COUNTIES).
   DESIGN WIND LOADS SHALL BE DETERMINED AS PER SECTION 1620 OF THE ABOVE MENTIONED CODE. IN ORDER TO VERIFY THAT COMPONENTS AND ANCHORS ON THIS P.A.D. AS TESTED WERE NOT OVER STRESSED, A 33% INCREASE IN ALLOWABLE STRESS FOR WIND LOADS WAS **NOT** USED IN THEIR ANALYSIS.
   FASTENERS SPACING TO WOOD HAS BEEN DETERMINED IN ACCORDANCE WITH N.D.S. 2005.
   ASSA/60mm BERTHA ROLL-UP ADEQUACY FOR IMPACT AND FATIGUE RESISTANCE HAS BEEN VERIFIED IN ACCORDANCE WITH SECTION 1626 OF THE ABOVE MENTIONED CODE AS PER FENESTRATION TESTING LAB. REPORTS # 2751 & # 2760 AS PER TAS-201, TAS-202 & TAS-203 PROTOCOLS.

2. ALL ALUMINUM EXTRUSIONS SHALL BE ALUMINUM ASSOCIATION 6063-T6 ALLOY & TEMPER (UNLESS OTHERWISE NOTED).

3. ALL SCREWS TO BE STAINLESS STEEL 304 OR 316 AISI SERIES OR CORROSION RESISTANT COATED CARBON STEEL AS PER DIN 50018 W/ 50 ksi YIELD STRENGTH AND 90 ksi TENSILE STRENGTH. ALL TEK SCREWS SHALL BE AS MANUFACTURED BY ITW BUILDEX, INC.

4. BOLTS TO BE ASTM A-307 GALVANIZED STEEL OR AISI 304 SERIES STAINLESS STEEL, WITH 35 ksi MINIMUM YIELD STRENGTH.

5. STORM BARS AT FLOOR AND CEILING MOUNTING INSTALLATIONS MAY BE REMOVABLE AT NON HURRICANE CONDITIONS. HOWEVER, EACH STORM BAR SHALL BEAR A PERMANENT LABEL IN A VISIBLE PLACE WITH A WARNING NOTE INSTRUCTING THE TENANT OR OWNER THAT STORM BARS MUST BE INSTALLED WITH CORRESPONDING HARDWARE DURING PERIODS OF HURRICANE WARNING AND THAT ROLL UP SHUTTERS WILL NOT OFFER HURRICANE PROTECTION UNLESS ALL STORM BAR ARE INSTALLED AS DIRECTED.

6. REMOVABLE STORM BARS SHALL BE STORED IN A CONSPICUOUS PLACE WITH EASY AND IMMEDIATE ACCESS SO THAT THEY CAN BE REACHED AND INSTALLED ANY TIME (HURRICANE CONDITIONS OR NOT) SLATS ARE ROLLED DOWN. THE EFFECT OF THE SLATS ROLLED DOWN WITHOUT STORM BARS IS; THOSE SLATS WILL SLIP OUT OF TRACK DUE TO THE DEFLECTION CAUSED BY WIND FORCES.
   WHEN REMOVING STORM BARS, ONE STORM BAR SHALL ALWAYS BE LEFT INSTALLED (SHALL NOT BE REMOVED).
   ~~THIS CONDITION IS ONLY REQUIRED FOR HEADER SPANS EQUAL OR GREATER THAN 12'-0".~~

7. ANCHORS TO WALL FOR SIDE RAILS & BOX CONNECTION SHALL BE AS FOLLOWS (UNLESS OTHERWISE NOTED):

   (A) TO EXISTING POURED CONCRETE (Min. f'c=3192 psi):
   - 1/4"ø TAPCON ANCHORS, AS MANUFACTURED BY ITW BUILDEX, INC.

   NOTES:
   A.1) MINIMUM EMBEDMENT OF TAPCON ANCHORS INTO POURED CONCRETE IS 1 3/4". NO EMBEDMENT INTO STUCCO SHALL BE CONSIDERED AS PART OF THE REQUIRED EMBEDMENT.
   A.2) IN CASE THAT PRECAST STONE, PRECAST CONCRETE PANELS, OR PAVERS BE FOUND ON THE EXISTING WALL OR FLOOR, ANCHORS SHALL BE LONG ENOUGH TO REACH THE MAIN STRUCTURE BEHIND SUCH PANELS. ANCHORAGE SHALL BE AS INDICATED ON NOTE A.1 ABOVE.

   (B) TO EXISTING CONCRETE BLOCK WALL (ASTM C-90):
   - 1/4" ø TAPCON ANCHORS AS MANUFACTURED BY ITW BUILDEX, INC.

   NOTES:
   B.1) MINIMUM EMBEDMENT OF TAPCON ANCHORS INTO CONCRETE BLOCK UNIT SHALL BE 1 1/4".
   B.2) IN CASE THAT PRECAST STONE OR PRECAST CONCRETE PANELS BE FOUND ON THE EXISTING WALL, ANCHORS SHALL BE LONG ENOUGH TO REACH THE MAIN STRUCTURE BEHIND SUCH PANELS. ANCHORAGE SHALL BE AS INDICATED ON NOTE B.1 ABOVE.

   (C) TO EXISTING WOOD FRAME BUILDING: SOUTHERN PINE #2 W/ G=0.55 MIN.
   - 1/4"ø LAG SCREWS PER N.D.S.

   NOTES:
   C.1) MINIMUM THREADED PENETRATION OF LAG SCREWS INTO THE WOOD FRAME UNIT SHALL BE 1 1/2" NO THREADED PENETRATION INTO STUCCO SHALL BE CONSIDERED AS PART OF THE REQUIRED THREADED PENETRATION.
   C.2) MINIMUM EDGE DISTANCE OF LAG SCREWS INTO WOOD SHALL BE AS INDICATED ON SHEET 8.
   C.3) IN CASE THAT PRECAST STONE, PRECAST CONCRETE OR BRICK PANELS, VENEER OR PAVERS BE FOUND ON THE EXISTING WALL, ANCHORS SHALL BE LONG ENOUGH TO REACH THE MAIN SUBSTRATE BEHIND SUCH PANELS.
   MINIMUM THREADED PENETRATION SHALL BE AS INDICATED ON NOTE C.1 ABOVE.

8. ANCHORS SHALL BE INSTALLED FOLLOWING ALL OF THE RECOMMENDATIONS AND SPECIFICATIONS OF THE ANCHOR'S MANUFACTURER.

9. ANCHORS REQUIRED FOR STORM BARS, HEADER & MULLIONS CONNECTIONS TO CONCRETE (MIN. f'c=3000 PSI) SHALL BE AS SPECIFIED ON APPLICABLE SECTIONS SHOWN ON SHEETS 5, 5A, 5B, 6, 7 OF 14 RESPECTIVELY.

   -CALK-IN ANCHORS TO BE AS MANUFACTURED BY POWERS FASTENERS, INC.
   -TAPCON ANCHORS AS MANUFACTURED BY ITW BUILDEX, INC.
   -KWIK BOLT TZ EXPANSION ANCHORS AS MANUFACTURED BY HILTI, INC.

   MINIMUM EDGE DISTANCE AND SPACING FOR ABOVE MENTIONED ANCHORS SHALL BE AS INDICATED BELOW OR AT ABOVE MENTIONED SHEET. EDGE DISTANCE AND EMBEDMENTS ARE BEYOND ANY FINISH MATERIAL.

			MINIMUM EMBEDMENT	
ANCHOR	SPACING	EDGE DISTANCE	POURED CONCRETE	CONCRETE BLOCK
-1/4"ø TAPCON	3"	3"	1 3/4" (Min. f'c=3192 psi)	1 1/4" (ASTM C-90)
-1/4"ø CALK-IN	2 1/2"	3"	7/8" (Min. f'c=3000 psi)	-
-3/8"ø CALK-IN	3 3/4"	4 1/2"	1 1/4" (Min. f'c=3000 psi)	-
-1/2"ø CALK-IN	5"	6"	1 1/2" (Min. f'c=3000 psi)	-
-5/16"ø TAPCON XL	3 3/4"	4"	-	1 3/4" (ASTM C-90, GROUT FILLED)
-3/8"ø KWIK BOLT TZ	6"	4 3/8"	2" (Min. f'c=3000 psi)	-
-1/2"ø KWIK BOLT TZ	9 3/4"	6"	3 1/4" (Min. f'c=3000 psi)	-

10. IT SHALL BE THE RESPONSIBILITY OF THE CONTRACTOR TO VERIFY THE SOUNDNESS OF THE STRUCTURE WHERE SHUTTER IS TO BE ATTACHED TO INSURE PROPER ANCHORAGE. THIS SHUTTER SHALL ONLY BE ATTACHED TO CONCRETE, BLOCK OR WOOD FRAME BUILDINGS.

11. THE INSTALLATION CONTRACTOR IS TO SEAL/CAULK ALL SHUTTER COMPONENT EDGES WHICH REMAIN IN CONTINUOUS CONTACT WITH THE BUILDING TO PREVENT WIND/RAIN INTRUSION. CAULK AND SEAL SHUTTER TRACKS ALL AROUND FULL LENGTH.

12. ROLL-UP MECHANISM NOT PART OF THIS APPROVAL, BUT SHALL BE CERTIFIED BY AN INDEPENDENT TESTING AGENCY.

13. ROLL-UP SHUTTER INSTALLATION SHALL COMPLY WITH SPECS INDICATED IN THIS DRAWING PLUS ANY BUILDING AND ZONING REGULATIONS PROVIDED BY THE JURISDICTION WHERE PERMIT IS APPLIED TO.

14. (A) THIS (P.A.D.) PREPARED BY THIS ENGINEER IS GENERIC AND DOES NOT PROVIDE INFORMATION FOR A SITE SPECIFIC PROJECT; I.E. WHERE THE SITE CONDITIONS DEVIATE FROM THE P.A.D.

    (B) CONTRACTOR TO BE RESPONSIBLE FOR THE SELECTION, PURCHASE AND INSTALLATION INCLUDING LIFE SAFETY OF THIS PRODUCT, BASED ON THIS PRODUCT P.A.D. PROVIDED HE/SHE DOES NOT DEVIATE FROM THE CONDITIONS DETAILED ON THIS DOCUMENT. CONSTRUCTION SAFETY AT SITE IS THE CONTRACTOR'S RESPONSIBILITY.

    (C) THIS PRODUCT APPROVAL DOCUMENT WILL BE CONSIDERED INVALID IF ALTERED BY ANY MEANS.

    (D) SITE SPECIFIC PROJECTS SHALL BE PREPARED BY A FLORIDA REGISTERED ENGINEER OR ARCHITECT WHICH WILL BECOME THE ENGINEER OF RECORD (E.O.R) FOR THE PROJECT AND WHO WILL BE RESPONSIBLE FOR THE PROPER USE OF THE P.A.D. ENGINEER OF RECORD, ACTING AS DELEGATED ENGINEER TO THE P.A.D. ENGINEER SHALL SUBMIT TO THIS LATHER THE SITE SPECIFIC DRAWINGS FOR REVIEW

    (E) THIS P.A.D. SHALL BEAR THE DATE AND ORIGINAL SEAL AND SIGNATURE OF THE PROFESSIONAL ENGINEER OF RECORD THAT PREPARED IT.

15. PERMANENT SHUTTER MANUFACTURER'S LABEL SHALL BE PLACED ON THE EXPOSED SURFACE OF THE SIDE RAIL APPROXIMATELY 4" BELOW THE TOP OF SUCH RAIL, LABEL SHALL READ AS FOLLOWS:
    WILLARD SHUTTER COMPANY, INC.
    MIAMI, FLORIDA.
    MIAMI-DADE COUNTY PRODUCT CONTROL APPROVED.

16. ONCE ALL COMPONENTS HAVE BEEN CHOSEN, CHECK FOR COMPLIANCE WITH SECTION 1613.1.9 OF THE FLORIDA BUILDING CODE 2007.

FLORIDA BUILDING CODE. (High Velocity Hurricane Zone)

PRODUCT REVISED
as complying with the Florida Building Code
Acceptance No 09-0730.02
Expiration Date 09/09/2014
By Helen A. Miller
Miami Dade Product Control Division
MIAMI-DADE COUNTY

7/14/09
P.E. SEAL/SIGNATURE/DATE

©2009 TILTECO INC.

TILTECO INC.
TILLIT TESTING & ENGINEERING COMPANY
6355 N.W. 36th. St., Ste. 305 - VIRGINIA GARDENS, FL. 33166
Phone : (305) 871-1530 , Fax : (305) 871-1631
e-mail: tilteco@aol.com
EB-0006719
WALTER A. TILLIT Jr., P.E.
FLORIDA Lic. # 44167

ASSA/60mm. BERTHA ROLL-UP

WILLARD SHUTTER COMPANY, INC.
(ASSA # 180)
4420 N.W. 35th COURT
MIAMI, FL. 33142
Phone: (305) 633-0162, Fax: (305) 638-8634

REV Nº	DESCRIPTION	DATE	REV Nº	DESCRIPTION	DATE
1	OLD 05-267	07/14/09	3		
2			4		

L.G.
DRAWN BY

07/14/09
DATE

09-136
DRAWING Nº

SHEET 1 OF 14

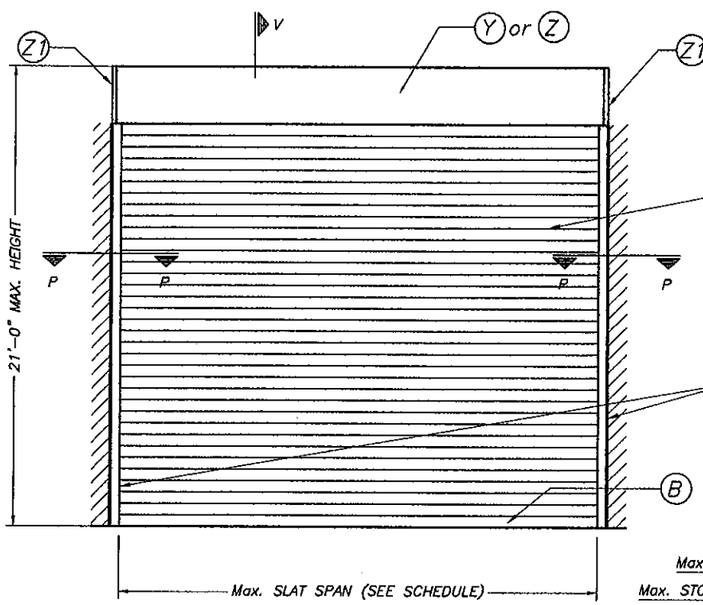

TYPICAL SINGLE UNIT ELEVATION (NO STORM BARS REQUIRED)

NOTE: SEE SHEET 2 & 3 FOR COMPONENTS NOMENCLATURE.

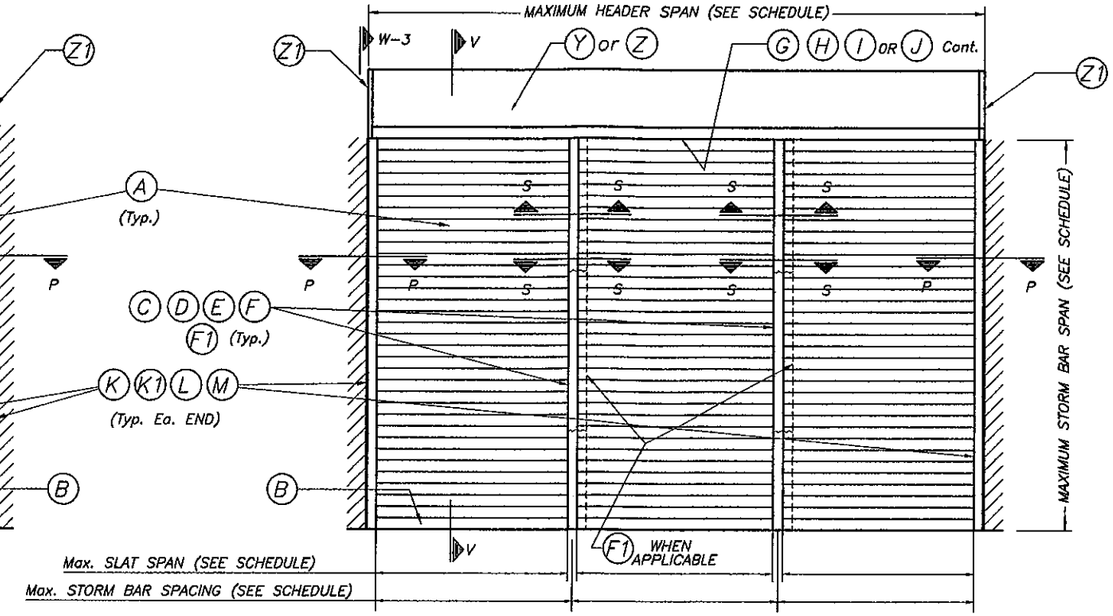

TYPICAL MULTIPLE UNIT ELEVATION (STORM BARS REQUIRED)

NOTE: SEE SHEET 2 & 3 FOR COMPONENTS NOMENCLATURE.

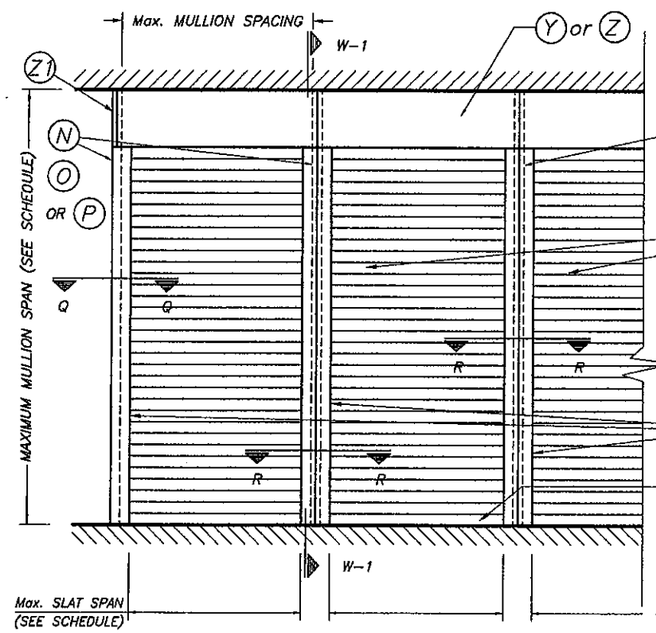

TYPICAL CONSECUTIVE SINGLE UNIT ELEVATION (NO STORM BARS REQUIRED)

NOTE: SEE SHEET 2 & 3 FOR COMPONENTS NOMENCLATURE.

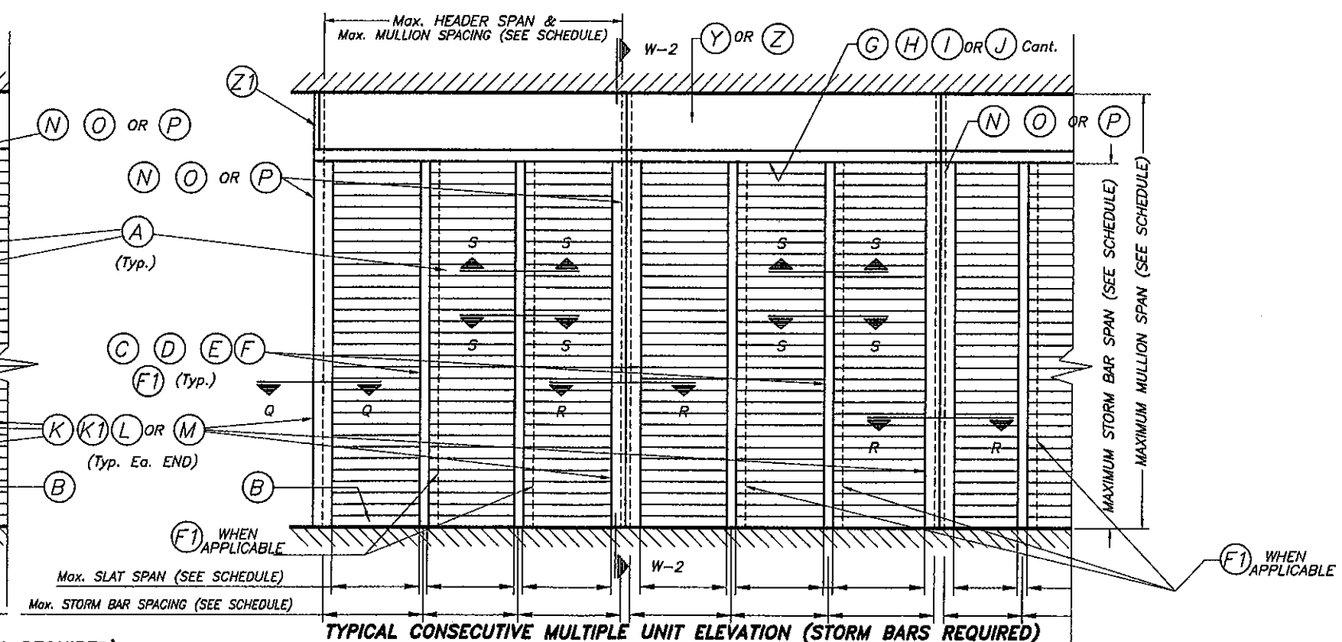

TYPICAL CONSECUTIVE MULTIPLE UNIT ELEVATION (STORM BARS REQUIRED)

NOTE: SEE SHEET 2 & 3 FOR COMPONENTS NOMENCLATURE.

NOTE:
SEE SECTIONS ON
SHEETS 4 THRU 7.

PRODUCT REVISED
as complying with the Florida
Building Code
Acceptance No 09-0730.02
Expiration Date 09/09/2014
By
Miami Dade Product Control
Division
MIAMI-DADE COUNTY

3/19/09
P.E. SEAL/SIGNATURE/DATE

©2009 TILTECO INC.

TILTECO INC.
TILLIT TESTING & ENGINEERING COMPANY
6355 N.W. 36th. St., Ste. 305 – VIRGINIA GARDENS, Fl. 33166
Phone : (305) 871-1530 , Fax : (305) 871-1531
e-mail: tilteco@aol.com
EB-0006719
WALTER A. TILLIT Jr., P.E.
FLORIDA Lic. # 44167

FLORIDA BUILDING CODE. (High Velocity Hurricane Zone)

ASSA/60mm. BERTHA ROLL-UP

WILLARD SHUTTER COMPANY, INC.
(ASSA # 180)
4420 N.W. 35th COURT
MIAMI, FL. 33142
Phone: (305) 633-0162, Fax: (305) 638-8634

REV N°	DESCRIPTION	DATE	REV N°	DESCRIPTION	DATE
1	OLD 05-267	07/14/09	3		
2			4		

L.G.
DRAWN BY

07/14/09
DATE

09-136
DRAWING N°

SHEET 1A OF 14

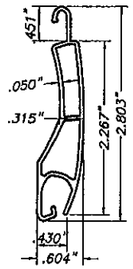

(A) TYPE 1 SLAT

EXTRUDED ALUMINUM SLAT
6063-T6 ALUMINUM ALLOY
SCALE: 1/2" = 1"

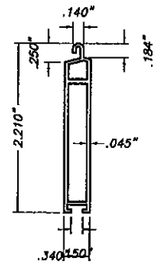

(B) TYPE 2 SLAT

EXTRUDED ALUMINUM BOTTOM SLAT
6063-T6 ALUMINUM ALLOY
SCALE: 1/2" = 1"

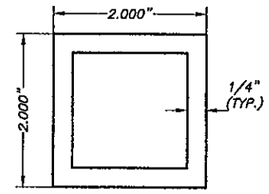

(C) TYPE 1 STORM BAR

2" EXTRUDED STORM BAR
6063-T6 ALUMINUM ALLOY
SCALE: 1/2" = 1"

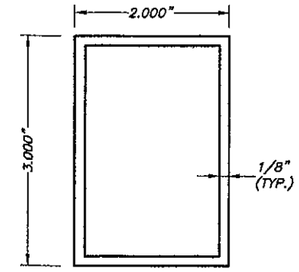

(D) TYPE 2 STORM BAR

3" EXTRUDED STORM BAR
6063-T6 ALUMINUM ALLOY
SCALE: 1/2" = 1"

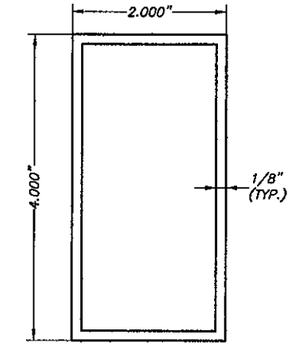

(E) TYPE 3 STORM BAR

4" EXTRUDED STORM BAR
6063-T6 ALUMINUM ALLOY
SCALE: 1/2" = 1"

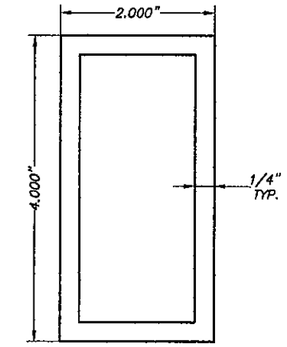

(F) TYPE 4 STORM BAR

4" HEAVY EXTRUDED STORM BAR
6063-T6 ALUMINUM ALLOY
SCALE: 1/2" = 1"

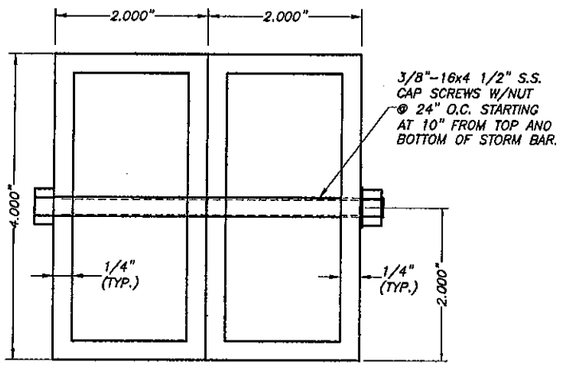

(F1) TYPE 5 STORM BAR

4" HEAVY EXTRUDED STORM BAR
6063-T6 ALUMINUM ALLOY
SCALE: 1/2" = 1"

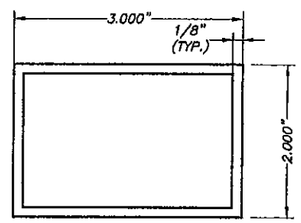

(G) TYPE 1 HEADER

6063-T6 ALUMINUM ALLOY
SCALE: 1/2" = 1"

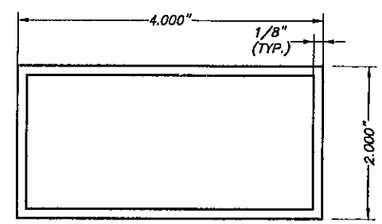

(H) TYPE 2 HEADER

6063-T6 ALUMINUM ALLOY
SCALE: 1/2" = 1"

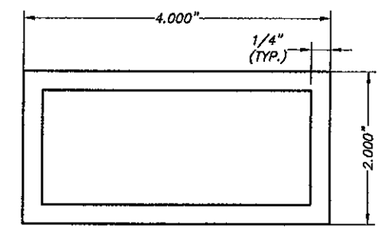

(I) TYPE 3 HEADER

6063-T6 ALUMINUM ALLOY
SCALE: 1/2" = 1"

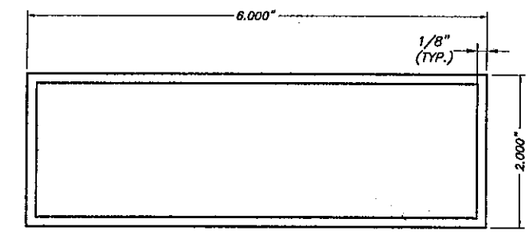

(J) TYPE 4 HEADER

6063-T6 ALUMINUM ALLOY
SCALE: 1/2" = 1"

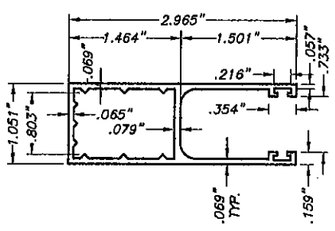

(K) TYPE 1 SIDE RAIL

6063-T6 Alum. ALLOY
SCALE: 1/2" = 1"

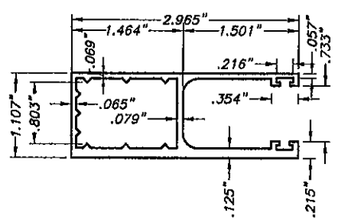

(K1) TYPE 2 SIDE RAIL

6063-T6 Alum. ALLOY
SCALE: 1/2" = 1"

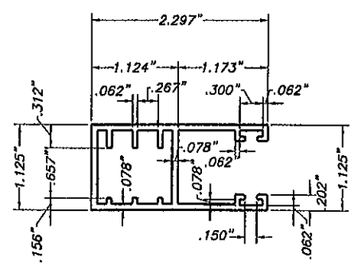

(L) TYPE 3 SIDE RAIL

6063-T6 Alum. ALLOY
SCALE: 1/2" = 1"

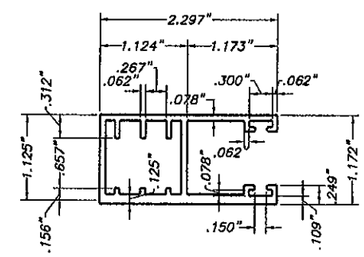

(M) TYPE 4 SIDE RAIL

6063-T6 Alum. ALLOY
SCALE: 1/2" = 1"

FLORIDA BUILDING CODE. (High Velocity Hurricane Zone)

PRODUCT REVISED
as complying with the Florida Building Code
Acceptance No 09-0730.02
Expiration Date 09/09/2014
By Helmy A. Tillit
Miami Dade Product Control Division MIAMI-DADE COUNTY

STATE OF FLORIDA LICENSED PROFESSIONAL ENGINEER 44167
07/14/09
P.E. SEAL/SIGNATURE/DATE

©2009 TILTECO INC.

TILTECO INC.
TILLIT TESTING & ENGINEERING COMPANY
6355 N.W. 36th St., Ste. 305 – VIRGINIA GARDENS, Fl. 33166
Phone : (305) 871-1530 , Fax : (305) 871-1531
e-mail: tilteco@aol.com
EB-0006719
WALTER A. TILLIT Jr., P.E.
FLORIDA Lic. # 44167

ASSA/60mm. BERTHA ROLL-UP

WILLARD SHUTTER COMPANY, INC.
(ASSA # 180)
4420 N.W. 35th COURT
MIAMI, FL. 33142
Phone: (305) 633-0162, Fax: (305) 638-8634

REV N°	DESCRIPTION	DATE	REV N°	DESCRIPTION	DATE
1	OLD 05-267	07/14/09	3		
2			4		

L.G.
DRAWN BY

07/14/09
DATE

09-136
DRAWING N°

SHEET 2 OF 14

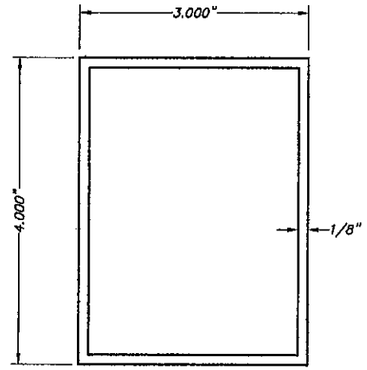

(N) TYPE 1 MULLION

4" EXTRUDED MULLION
6063-T6 ALUMINUM ALLOY
SCALE: 1/2" = 1"

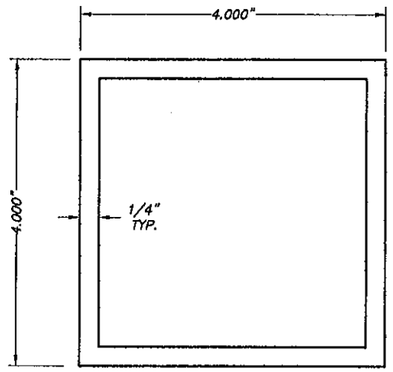

(O) TYPE 2 MULLION

4" EXTRUDED MULLION
6063-T6 ALUMINUM ALLOY
SCALE: 1/2" = 1"

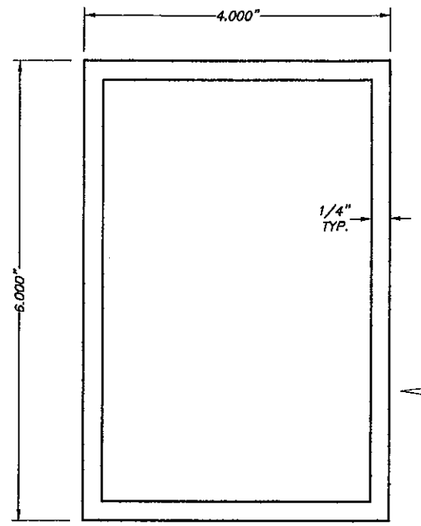

(P) TYPE 3 MULLION

6" EXTRUDED MULLION
6063-T6 ALUMINUM ALLOY
SCALE: 1/2" = 1"

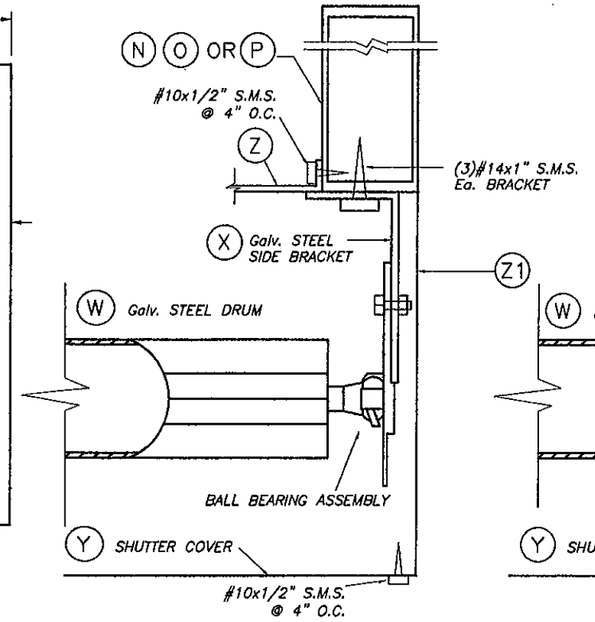

BRACKET DETAIL 1A

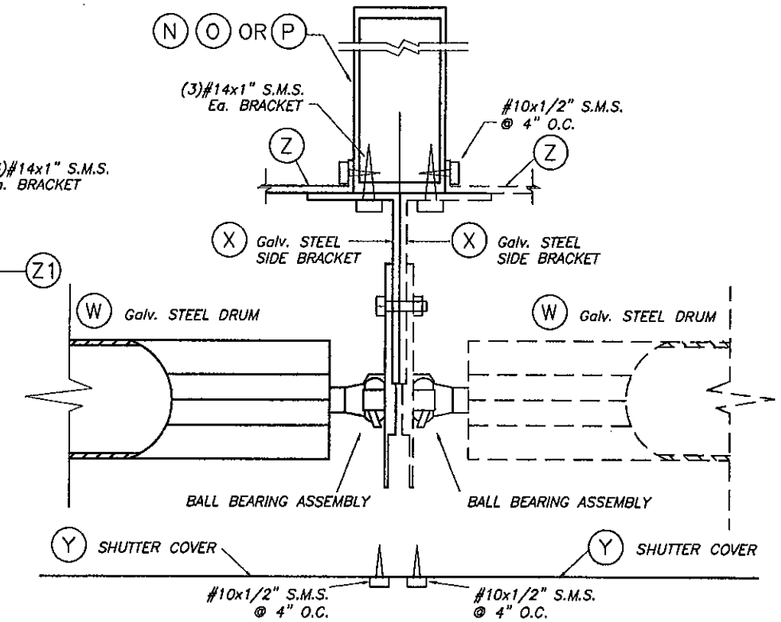

BRACKET DETAIL 2

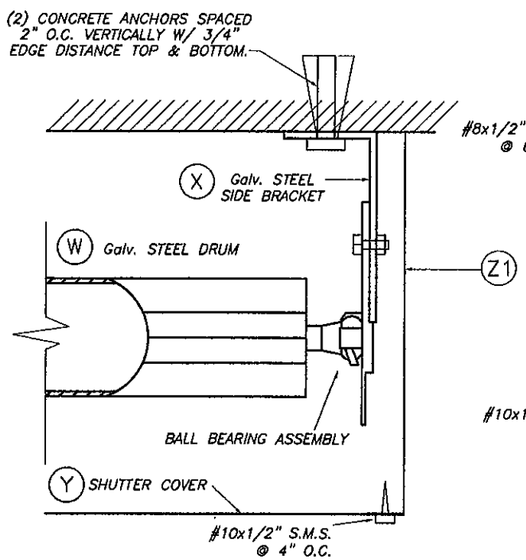

BRACKET DETAIL 1

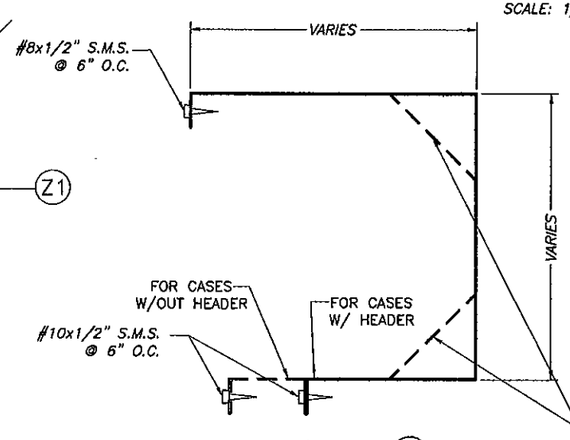

PLAN

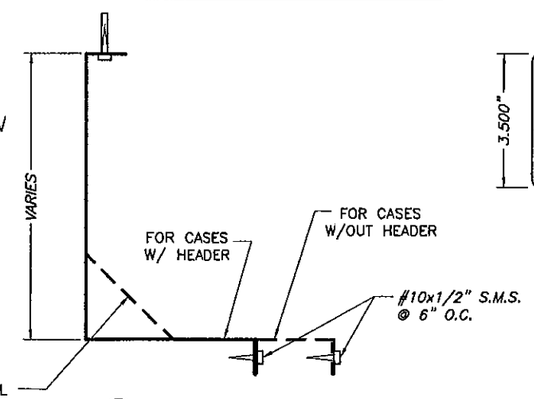

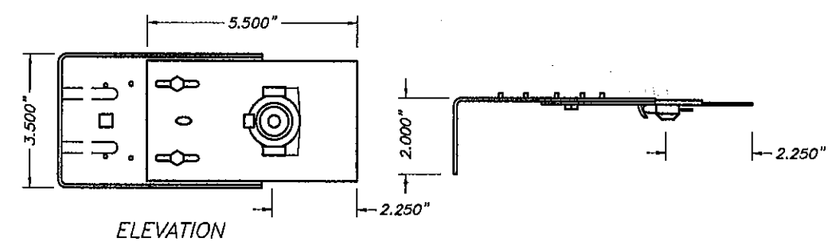

ELEVATION

(X) SIDE BRACKET SCALE: 1/4" = 1"

1010 ELITE ROLLED STEEL F. E.
P. O. 1 Z 200 DESIGNATION
Ftu= 410 NW/MM2. % OF STRETCH
MINIMAL ON TEST. BAR OF 80 MM: 24 %
G-90 GALVANIZED COATING Thk.: .060"

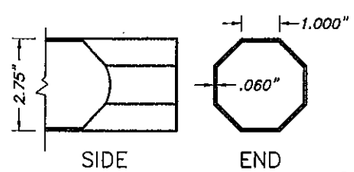

(W) DRUM SCALE: 1/4" = 1"

1010 ELITE ROLLED STEEL F. E.
P. O. 1 Z 200 DESIGNATION
Ftu= 410 NW/MM2. % OF STRETCH
MINIMAL ON TEST. BAR OF 80 MM: 24 %
G-9D GALVANIZED COATING Thk.: .060"

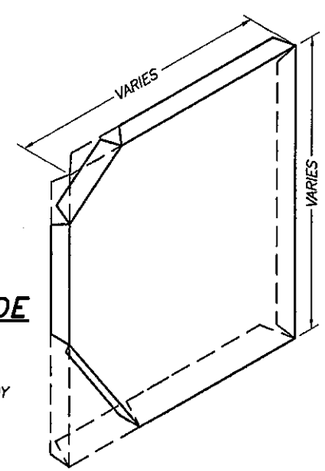

(Z1) SHUTTER SIDE COVER

SCALE: 3/16" = 1"
3105-H14 ALUMINUM ALLOY
THICKNESS: .032"

(Y) WALL HOUSING

SCALE: 3/16" = 1"
3105-H14 ALUMINUM ALLOY
THICKNESS: .032"

(Z) WALL HOUSING

SCALE: 3/16" = 1"
3105-H14 ALUMINUM ALLOY
THICKNESS: .032"

END BRACKET SYSTEM

* SEE NOTE 12 ON SHEET 1

FLORIDA BUILDING CODE. (High Velocity Hurricane Zone)

PRODUCT REVISED
as complying with the Florida
Building Code
Acceptance No 09-0730.02
Expiration Date 09/09/2014
By Helen A. Mello
Miami Dade Product Control
Division

MIAMI-DADE COUNTY

WALTER A. TILLIT JR. LICENSE No. 44167 STATE OF FLORIDA
7/14/09

P.E. SEAL/SIGNATURE/DATE

©2009 TILTECO INC.

TILTECO INC.
TILLIT TESTING & ENGINEERING COMPANY
6355 N.W. 36th. St., Ste. 305 – VIRGINIA GARDENS, Fl. 33166
Phone : (305) 871-1530 , Fax : (305) 871-1531
e-mail: tilteco@aol.com
EB-0006719
WALTER A. TILLIT Jr., P.E.
FLORIDA Lic. # 44167

ASSA/60mm. BERTHA ROLL-UP

WILLARD SHUTTER COMPANY, INC.
(ASSA # 180)
4420 N.W. 35th COURT
MIAMI, FL. 33142
Phone: (305) 633-0162, Fax: (305) 638-8634

REV Nº	DESCRIPTION	DATE	REV Nº	DESCRIPTION	DATE
1	OLD 05-267	07/14/09	3		
2			4		

L.G.
DRAWN BY

07/14/09
DATE

09-136
DRAWING Nº

SHEET 3 OF 14

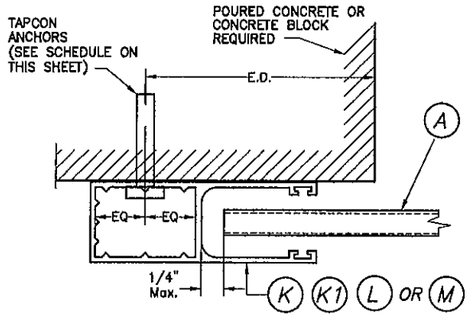

SECTION P – P (1) : WALL MOUNT

SCALE: 1/2" = 1"

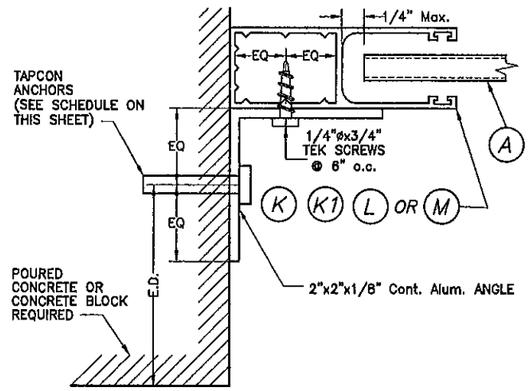

SECTION P – P (2) : SIDE WALL MOUNT

SCALE: 1/2" = 1"

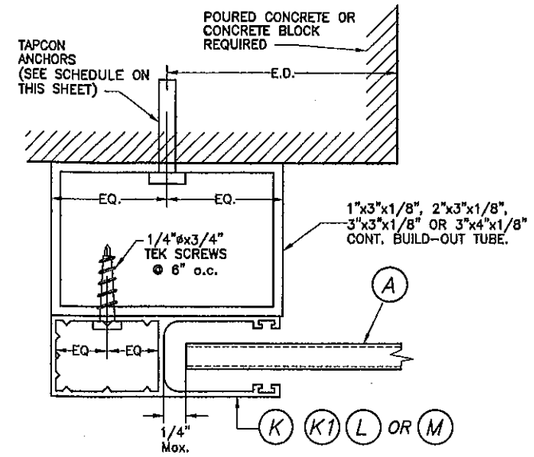

SECTION P – P (3) : BUILD-OUT MOUNT

SCALE: 1/2" = 1"

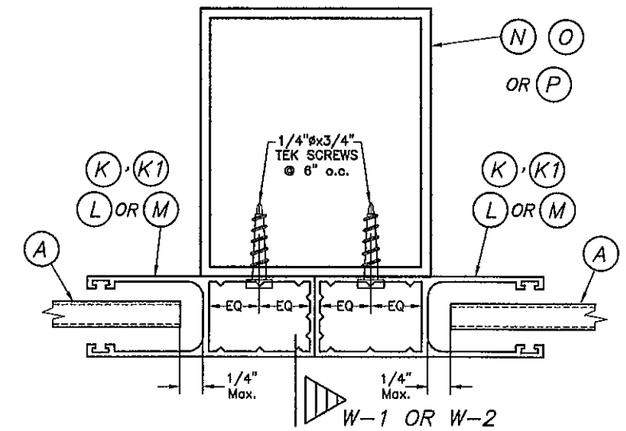

SECTION R – R : MULLION MOUNT (FACE MOUNT)

SCALE: 1/2" = 1"

SIDE RAIL ANCHOR SCHEDULE MAXIMUM DESIGN PRESSURE RATING "W" (p.s.f.) AND CORRESPONDING MAXIMUM ANCHOR SPACING(in) * FOR SIDE RAILS (K), (K1), (L) & (M) CONNECTION TO POURED CONCRETE OR CONCRETE BLOCK WALL

(USE MAXIMUM VALUES BETWEEN POSITIVE AND NEGATIVE LOAD)

MAXIMUM DESIGN LOAD "W" (p.s.f.)	SIDE RAILS (K) & (K1)			SIDE RAILS (L) & (M)		
	WALL MOUNT	INSIDE MOUNT	BUILD-OUT MOUNT	WALL MOUNT	INSIDE MOUNT	BUILD-OUT MOUNT
80 OR LESS	6"	4"	6"	6"	4"	6"
	6"	6"	6"	6"	6"	6"
>80 TO 150	3 1/2"	N/A	5"	3"	N/A	5"
	6"	6"	6"	6"	6"	6"
>150 TO 195	3"	N/A	4 1/2"	N/A	N/A	4 1/2"
	6"	5"	6"	6"	5"	6"

CONCRETE BLOCK
POURED CONCRETE

SUBSTRATE LEGEND

** MAXIMUM ANCHOR SPACING (in.) AT SIDE RAILS VERSUS EDGE DISTANCE = E. D.*

MAXIMUM ANCHOR SPACING ARE VALID FOR 3" EDGE DISTANCE.

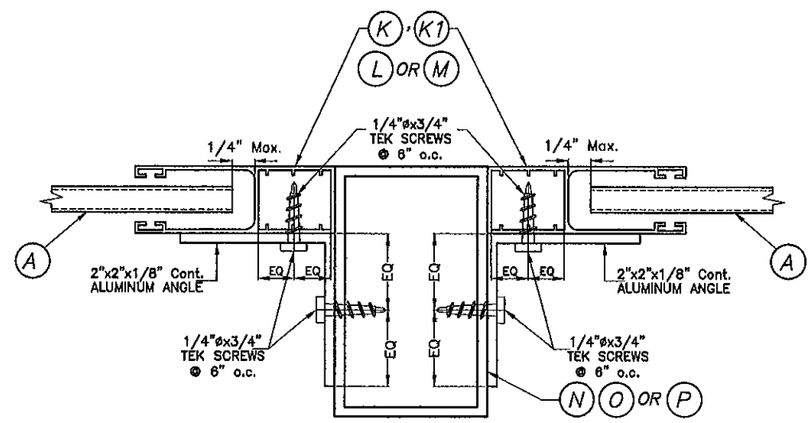

SECTION R – R : MULLION MOUNT (INSIDE MOUNT)

SCALE: 1/2" = 1"

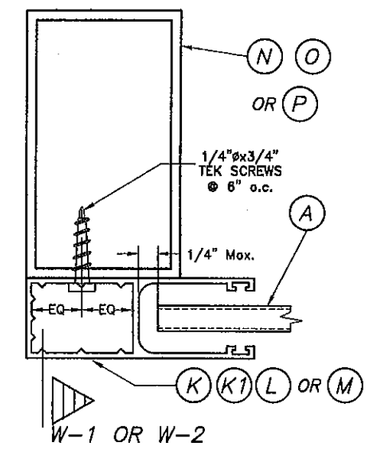

SECTION Q – Q : MULLION MOUNT (FACE MOUNT)

SCALE: 1/2" = 1"

FLORIDA BUILDING CODE. (High Velocity Hurricane Zone)

PRODUCT REVISED
as complying with the Florida Building Code
Acceptance No 09-0730.02
Expiration Date 09/09/2014
By Helen A. Mohr
Miami Dade Product Control Division

MIAMI-DADE COUNTY

WALTER A. TILLIT LICENSED No. 44167 STATE OF FLORIDA
7/14/09
P.E. SEAL/SIGNATURE/DATE

©2009 TILTECO INC.

TILTECO INC.
TILLIT TESTING & ENGINEERING COMPANY
8355 N.W. 36th. St., Ste. 305 – VIRGINIA GARDENS, FL 33166
Phone : (305) 871-1530 , Fax : (305) 871-1531
e-mail: tilteco@aol.com
EB-0006719
WALTER A. TILLIT Jr., P.E.
FLORIDA Lic. # 44167

ASSA/60mm. BERTHA ROLL-UP

WILLARD SHUTTER COMPANY, INC.
(ASSA # 180)
4420 N.W. 35th COURT
MIAMI, FL. 33142
Phone: (305) 633-0162, Fax: (305) 638-8634

REV N°	DESCRIPTION	DATE	REV N°	DESCRIPTION	DATE
1	OLD 05-287	07/14/09	3		
2			4		

L.G.
DRAWN BY

07/14/09
DATE

09-136
DRAWING N°

SHEET 4 OF 14

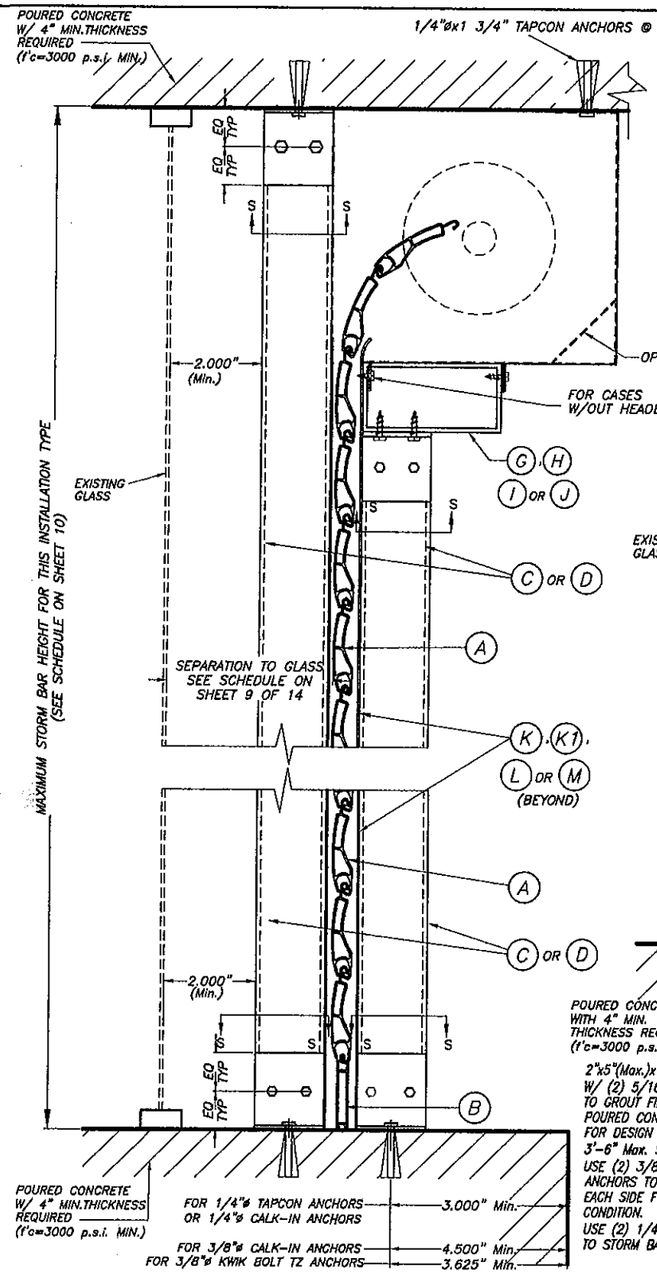

CEILING & FLOOR MOUNTING SECTION V-V(2) INSTALLATION W/ FIXED OR REMOVABLE STORM BARS W/CONCRETE ANCHORS

(SEE SECTION "S" FOR ANCHOR TYPE REQUIREMENT)

SCALE : N. T. S.

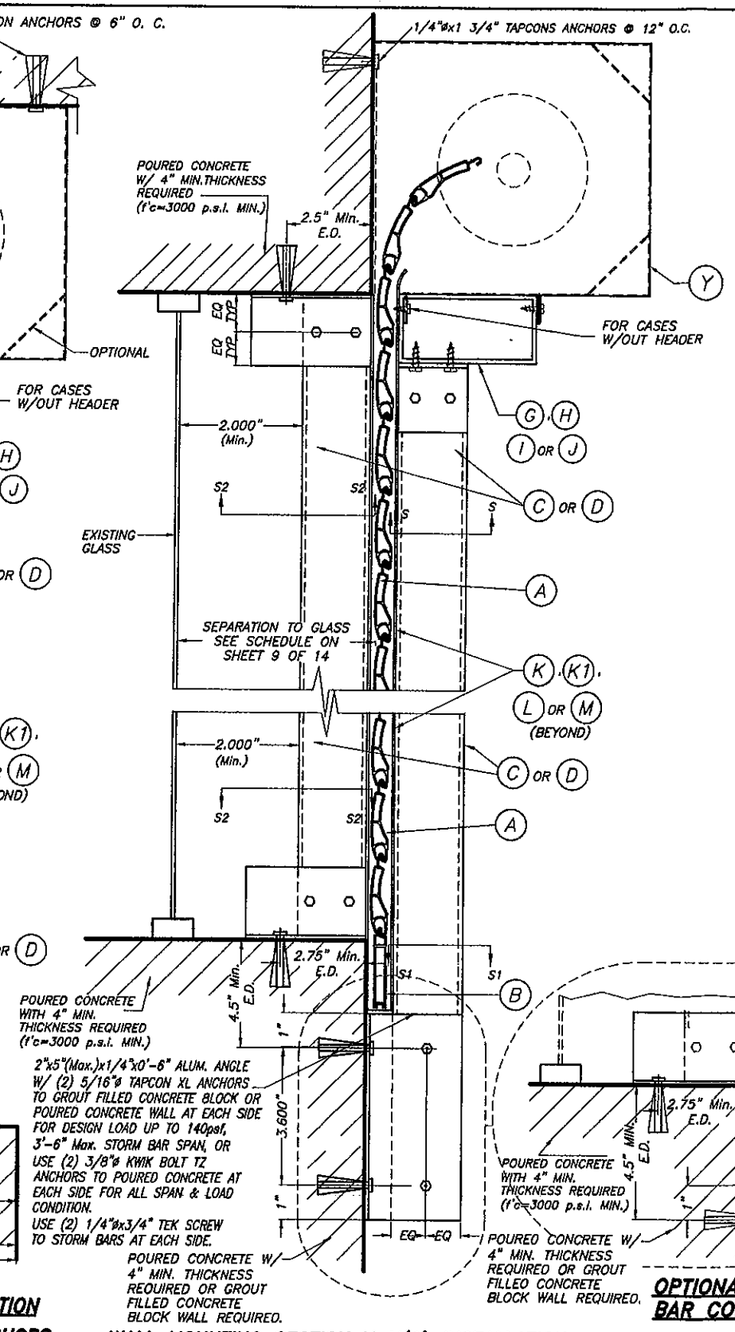

WALL MOUNTING SECTION V-V(1) INSTALLATION W/ FIXED STORM BARS W/ CONCRETE ANCHORS

SCALE : N. T. S.

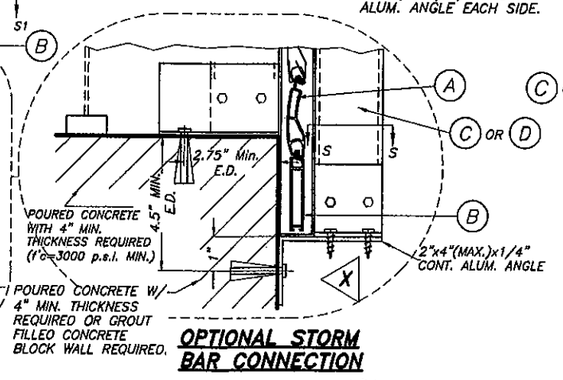

OPTIONAL STORM BAR CONNECTION

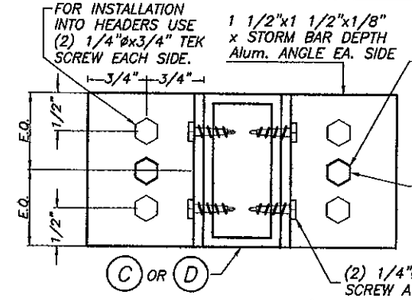

FOR INSTALLATIONS INTO CONCRETE, USE (1) 1/4"ø TAPCON ANCHOR, EACH SIDE AT CENTER OF ANGLE FOR ANY SLAT & STORM BAR SPAN & DESIGN LOADS UNDER 40psf. FOR DESIGN LOADS BETWEEN 40psf & 100psf, USE SAME CONNECTION W/ **TABLE 5** FOR MAX. SLAT & STORM BAR SPAN LIMITATIONS.

FOR DESIGN LOADS GREATER THAN 100psf AND ANY SLAT & STORM BAR SPAN, USE (1) 3/8"ø KWIK BOLT TZ ANCHOR, EACH SIDE AT CENTER OF ANGLE

SECTION S - S (FOR FIXED STORM BAR)

SCALE : 1/2" = 1"

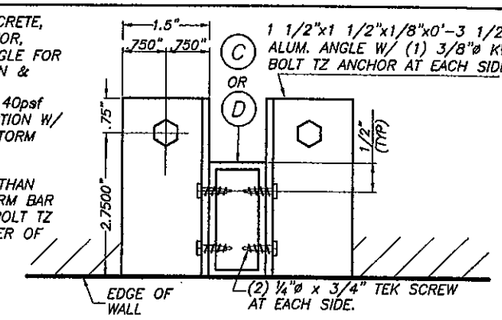

SECTION S2 - S2

SCALE : 1/4" = 1"

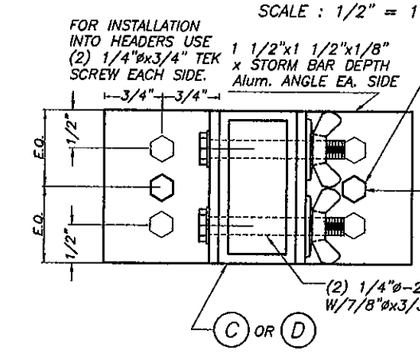

FOR INSTALLATIONS INTO CONCRETE, USE (1) 1/4"øx7/8" CALK-IN ANCHOR *, EACH SIDE AT CENTER OF ANGLE FOR ANY SLAT & STORM BAR SPAN & DESIGN LOADS UNDER 40psf. FOR DESIGN LOADS BETWEEN 40psf & 100psf, USE SAME CONNECTION W/ **TABLE 5** FOR MAX. SLAT & STORM BAR SPAN LIMITATIONS.

FOR DESIGN LOADS GREATER THAN 100psf AND ANY SLAT & STORM BAR SPAN, USE (1) 3/8"øx1 1/4" CALK-IN ANCHOR *, EACH SIDE AT CENTER OF ANGLE

SECTION S - S (FOR REMOVABLE STORM BAR)

SCALE : 1/2" = 1"

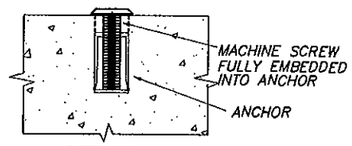

DETAIL A

N.T.S.

* 1/4" ø-20 OR 3/8" ø-16 MACHINE SCREWS USED JOINTLY W/ 1/4" ø x 7/8" OR 3/8" ø x 1 1/4" CALK-IN ANCHORS RESPECTIVELY SHALL BE LEFT TOGETHER W/ ANCHORS AT THE TIME STORM BARS ARE REMOVED. (SEE DET. A).

TABLE 5

DESIGN LOAD "W" (p.s.f.)	MAX. SLAT SPAN	"L" MAX. STORM BAR SPAN
40.0	3'-0"	8'-0"
	4'-0"	7'-9"
	5'-0"	6'-11"
	6'-0"	5'-9"
50.0	3'-0"	8'-0"
	4'-0"	6'-11"
	5'-0"	5'-6"
	6'-0"	4'-7"
60.0	3'-0"	7'-4"
	4'-0"	5'-9"
	5'-0"	4'-7"
80.0	3'-0"	5'-9"
	4'-0"	4'-4"
100.0	3'-0"	4'-7"
	4'-0"	3'-5"

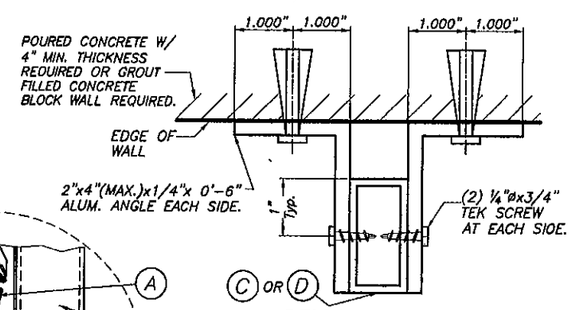

SECTION S1 - S1

SCALE : N. T. S.

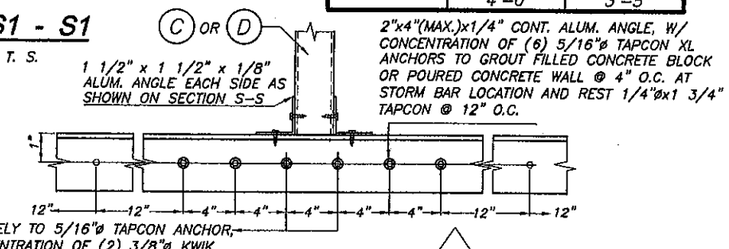

ALTERNATIVELY TO 5/16"ø TAPCON ANCHOR, USE CONCENTRATION OF (2) 3/8"ø KWIK BOLT TZ ANCHORS TO POURED CONCRETE WALL @ 4" O.C. AT STORM BAR LOCATION AND REST 1/4"øx1 3/4" TAPCON @ 12" O.C.

ELEVATION X

SCALE : N. T. S.

SECTION V - V

SINGLE SPAN SECTIONS AND DETAILS ARE SIMILAR TO ABOVE SHOWN WITHOUT STORM BAR & HEADERS.

FLORIDA BUILDING CODE. (High Velocity Hurricane Zone)

PRODUCT REVISED
as complying with the Florida Building Code
Acceptance No 09-0730.02
Expiration Date 09/09/2014
By Helen M. Maher
Miami Dade Product Control Division
MIAMI-DADE COUNTY

WALTER A. TILLIT JR. LICENSE STATE OF FLORIDA 44167
7/14/09
P.E. SEAL/SIGNATURE/DATE

©2009 TILTECO INC.

TILTECO INC.
TILLIT TESTING & ENGINEERING COMPANY
6355 N.W. 36th. St., Ste. 305 – VIRGINIA GARDENS, Fl. 33166
Phone : (305) 871-1530 , Fax : (305) 871-1531
e-mail: tilteco@aol.com
EB-0006719
WALTER A. TILLIT Jr., P.E.
FLORIDA Lic. # 44167

ASSA/60mm. BERTHA ROLL-UP

WILLARD SHUTTER COMPANY, INC.
(ASSA # 180)
4420 N.W. 35th COURT
MIAMI, FL. 33142
Phone: (305) 633-0162, Fax: (305) 638-8634

REV N°	DESCRIPTION	DATE	REV N°	DESCRIPTION	DATE
1	OLD 05-287	07/14/09	3		
2			4		

L.G. DRAWN BY
07/14/09 DATE
09-136 DRAWING N°
SHEET 5 OF 14

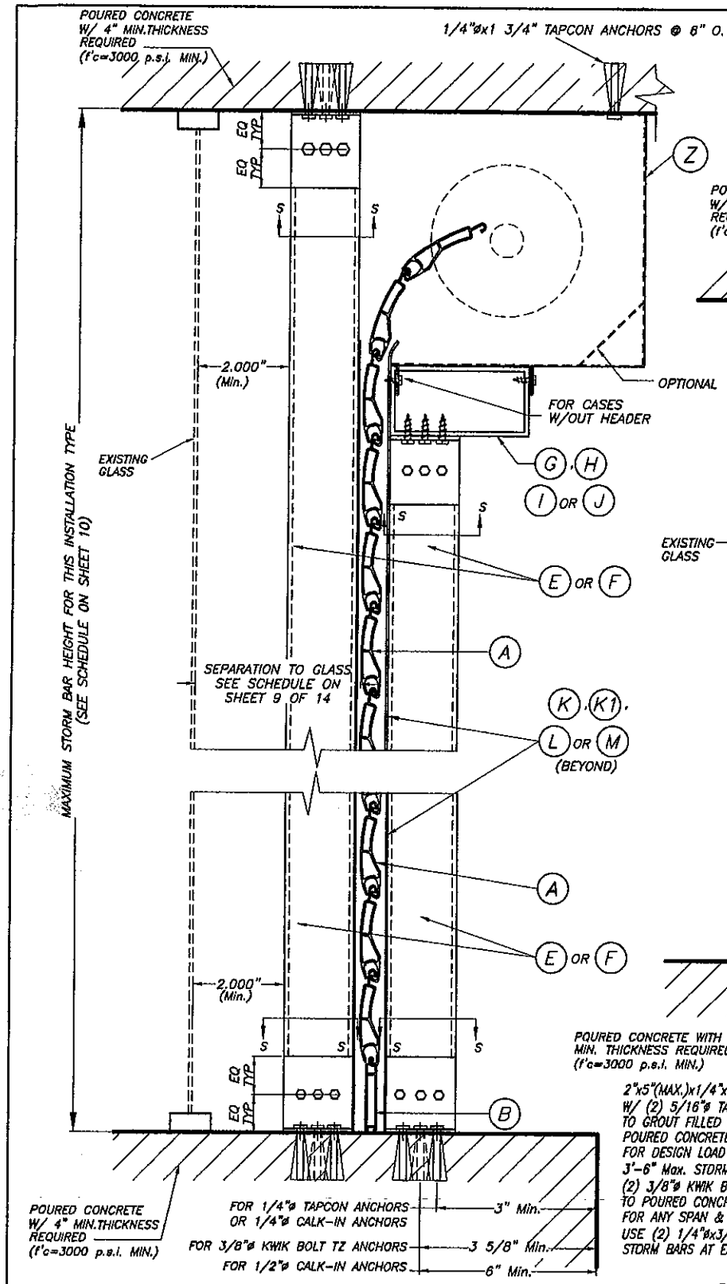

CEILING & FLOOR MOUNTING SECTION V-V(2) INSTALLATION W/ FIXED OR REMOVABLE STORM BARS W/CONCRETE ANCHORS

(SEE SECTION "S" FOR ANCHOR TYPE REQUIREMENT)

SCALE : N.T.S.

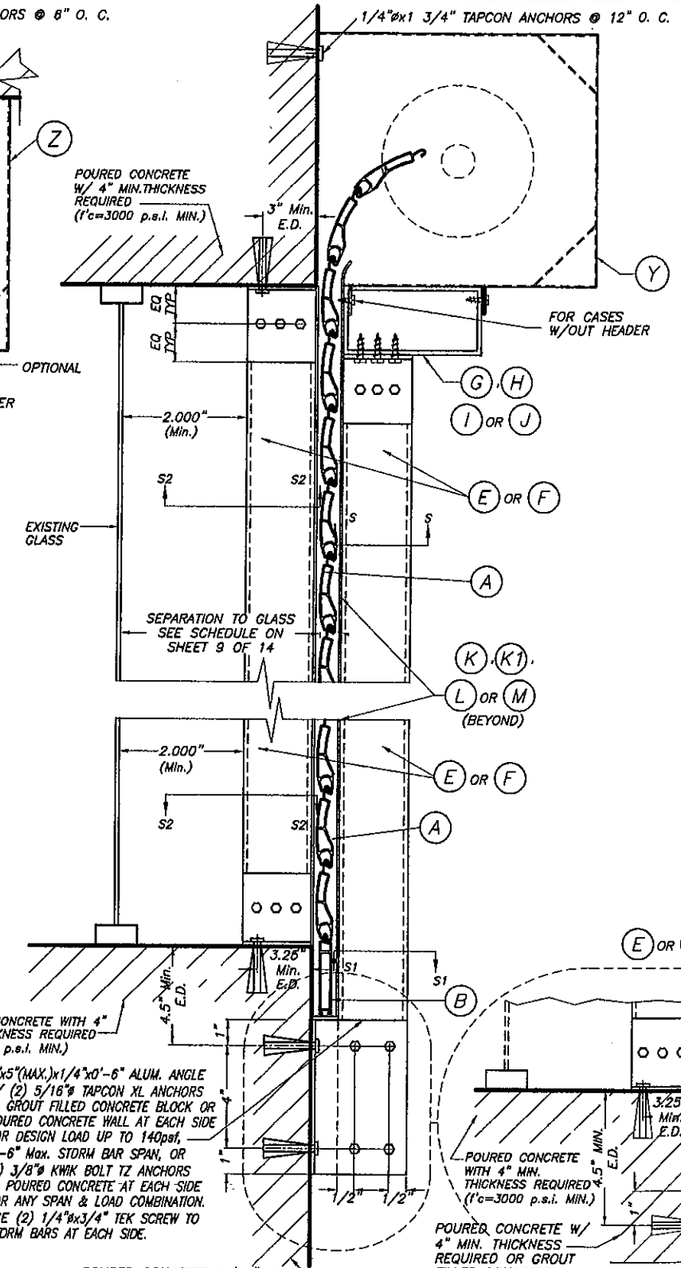

WALL MOUNTING SECTION V-V(1) INSTALLATION W/ FIXED STORM BARS W/CONCRETE ANCHORS

SCALE : N.T.S.

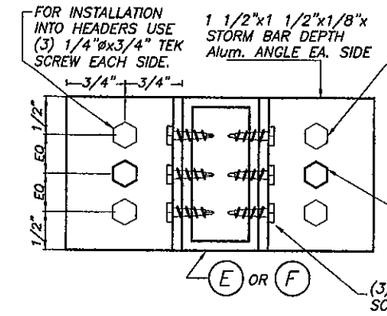

SECTION S - S (FOR FIXED STORM BAR)

SCALE : N.T.S.

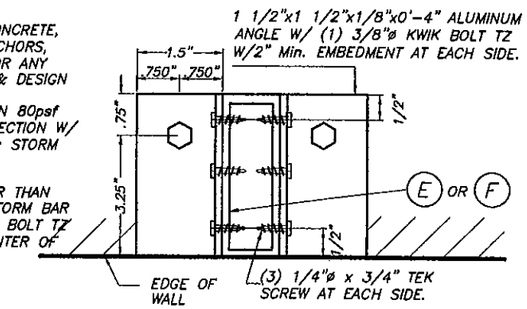

SECTION S2 - S2

SCALE : N.T.S.

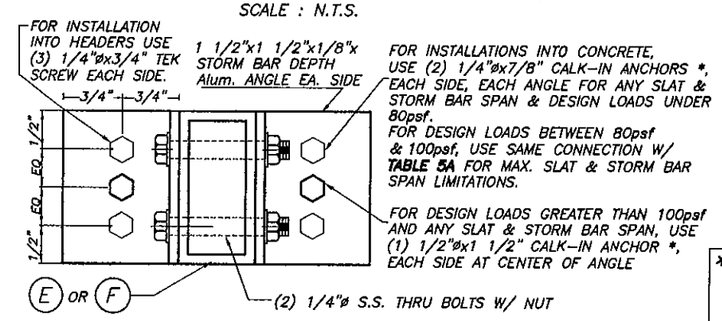

SECTION S - S (FOR REMOVABLE STORM BAR)

SCALE : N.T.S.

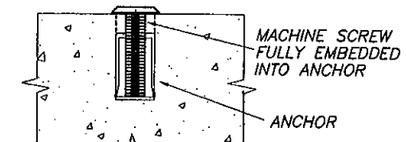

DETAIL A

SCALE : 1/2" = 1"

* 1/4"ø-20 OR 1/2"ø-13 MACHINE SCREWS USED JOINTLY W/ 1/4"øx7/8" OR 1/2"øx1 1/2" CALK-IN ANCHORS RESPECTIVELY SHALL BE LEFT TOGETHER W/ ANCHORS AT THE TIME STORM BARS ARE REMOVED. (SEE DET. A).

TABLE 5A

DESIGN LOAD "W" (p.s.f.)	MAX. SLAT SPAN	"L" MAX. STORM BAR SPAN
80.0	3'-0"	9'-11"
	4'-0"	8'-8"
	5'-0"	6'-11"
100.0	3'-0"	9'-2"
	4'-0"	6'-11"
	5'-0"	5'-6"

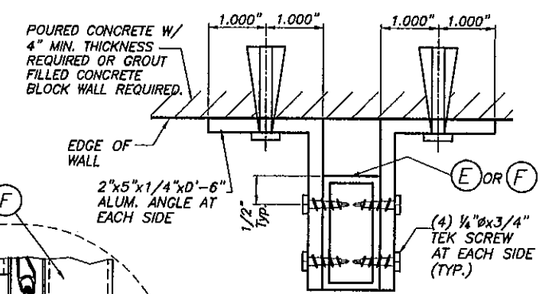

SECTION S1 - S1

SCALE : N. T. S.

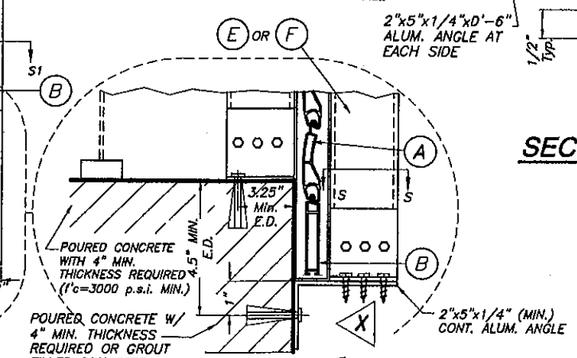

OPTIONAL STORM BAR CONNECTION

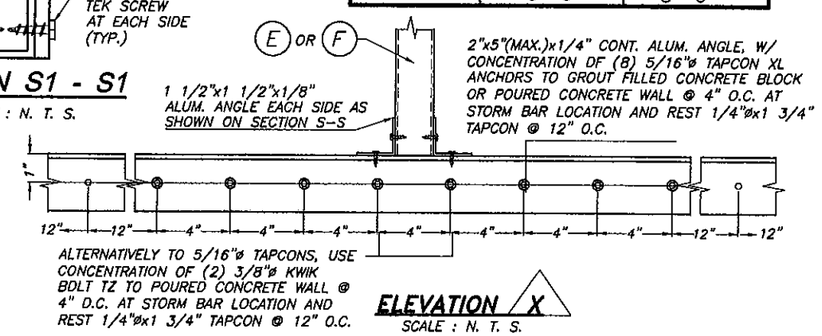

ELEVATION X

SCALE : N. T. S.

SECTION V - V

SINGLE SPAN SECTIONS AND DETAILS ARE SIMILAR TO ABOVE SHOWN WITHOUT STORM BAR & HEADERS.

FLORIDA BUILDING CODE. (High Velocity Hurricane Zone)

PRODUCT REVISED
as complying with the Florida Building Code
Acceptance No 09-0730.02
Expiration Date 09/09/2014
By Helena A. Melin
Miami Dade Product Control Division
MIAMI-DADE COUNTY

STATE OF FLORIDA LICENSED PROFESSIONAL ENGINEER No. 44167
7/14/09
P.E. SEAL/SIGNATURE/DATE

©2009 TILTECO INC.

TILTECO INC.
TILLIT TESTING & ENGINEERING COMPANY
6355 N.W. 36th. St., Ste. 305 – VIRGINIA GARDENS, FL 33166
Phone : (305) 871-1530 , Fax : (305) 871-1531
e-mail: tilteco@aol.com
EB-0006719
WALTER A. TILLIT Jr., P.E.
FLORIDA Lic. # 44167

ASSA/60mm. BERTHA ROLL-UP

WILLARD SHUTTER COMPANY, INC.
(ASSA # 180)
4420 N.W. 35th COURT
MIAMI, FL. 33142
Phone: (305) 633-0162, Fax: (305) 638-8634

REV N°	DESCRIPTION	DATE	REV N°	DESCRIPTION	DATE
1	OLD 05-267	07/14/09	3		
2			4		

L.G. DRAWN BY
07/14/09 DATE
09-136 DRAWING N°
SHEET 5A OF 14

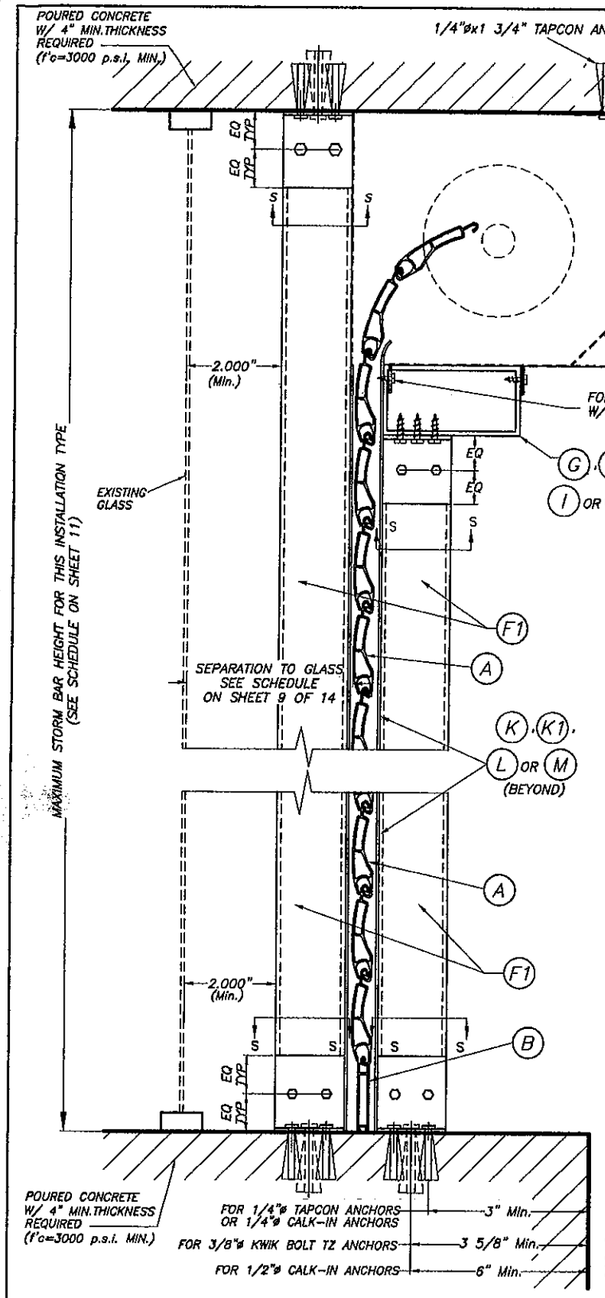

CEILING & FLOOR MOUNTING SECTION V-V(2) INSTALLATION W/ FIXED OR REMOVABLE STORM BARS W/CONCRETE ANCHORS

(SEE SECTION "S" FOR ANCHOR TYPE REQUIREMENT)

SCALE : N.T.S.

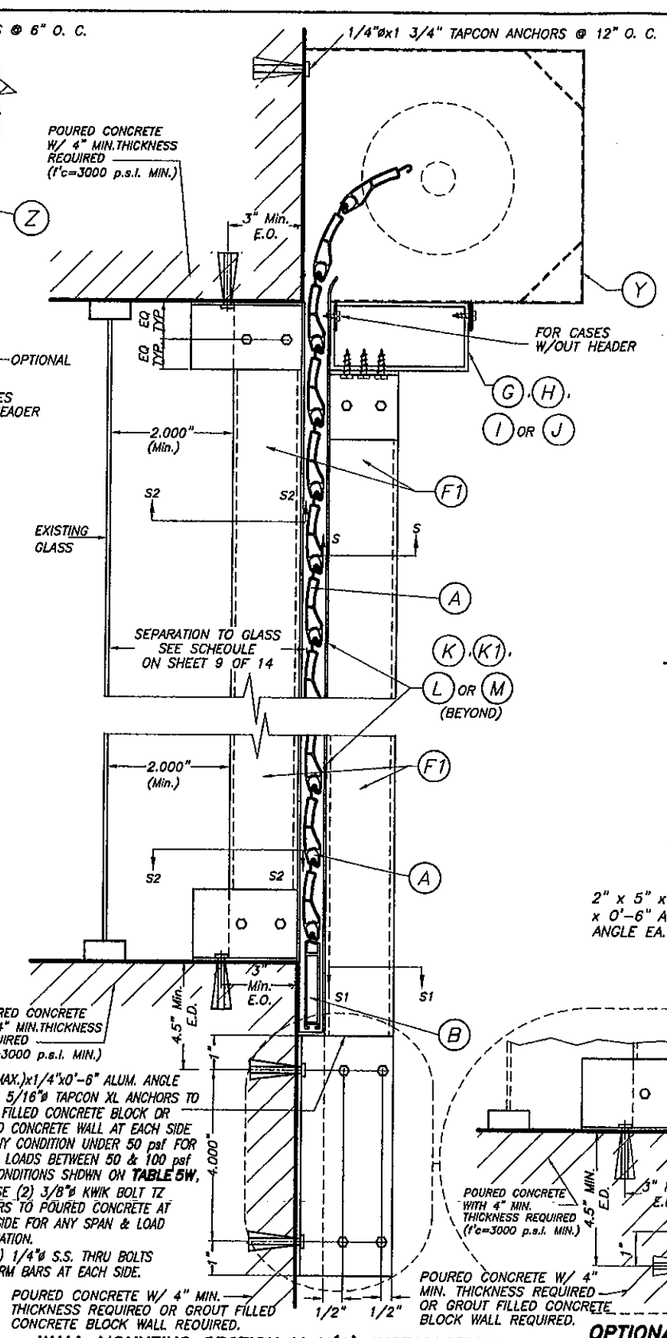

WALL MOUNTING SECTION V-V(1) INSTALLATION W/ FIXED STORM BARS W/ CONCRETE ANCHORS

SCALE : N.T.S.

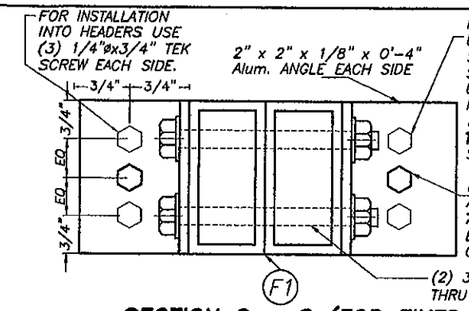

SECTION S - S (FOR FIXED STORM BAR)

SCALE : N.T.S.

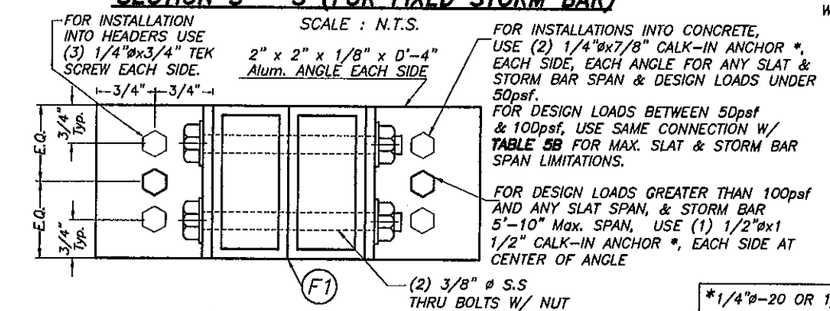

SECTION S - S (FOR REMOVABLE STORM BAR)

SCALE : N.T.S.

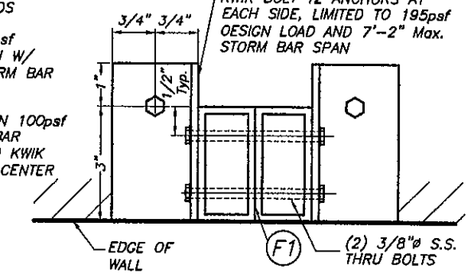

SECTION S2 - S2

SCALE : N.T.S.

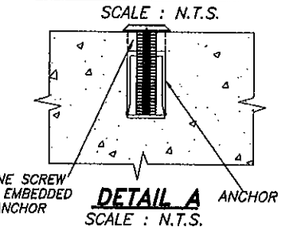

DETAIL A

SCALE : N.T.S.

*1/4"ø-20 OR 1/2"ø-13 MACHINE SCREWS USED JOINTLY W/ 1/4"øx7/8" OR 1/2"øx1 1/2" CALK-IN ANCHORS RESPECTIVELY SHALL BE LEFT TOGETHER W/ ANCHORS AT THE TIME STORM BARS ARE REMOVED. (SEE DET. A).

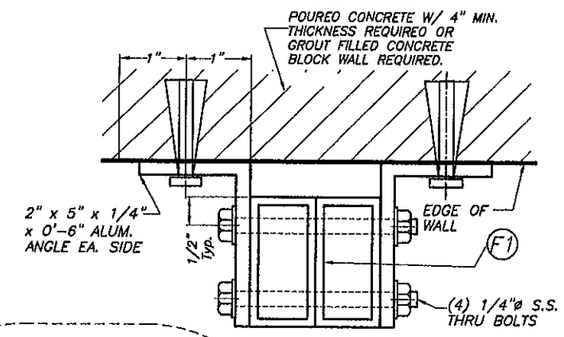

SECTION S1 - S1

SCALE : N.T.S.

TABLE 5W

DESIGN LOAD "W" (p.s.f.)	MAX. SLAT SPAN	"L" MAX. STORM BAR SPAN
50.0	3'-0"	13'-4"
	4'-0"	10'-5"
	5'-0"	8'-4"
	6'-0"	6'-11"
60.0	3'-0"	11'-7"
	4'-0"	8'-8"
	5'-0"	6'-11"
80.0	3'-0"	8'-8"
	4'-0"	6'-6"
	5'-0"	5'-2"
100.0	3'-0"	6'-11"
	4'-0"	5'-2"
	5'-0"	4'-2"

TABLE 5B

DESIGN LOAD "W" (p.s.f.)	MAX. SLAT SPAN	"L" MAX. STORM BAR SPAN
50.0	3'-0"	13'-4"
	4'-0"	12'-5"
	5'-0"	11'-1"
	6'-0"	9'-3"
60.0	3'-0"	12'-9"
	4'-0"	11'-7"
	5'-0"	9'-3"
80.0	3'-0"	11'-6"
	4'-0"	8'-8"
	5'-0"	6'-11"
100.0	3'-0"	9'-2"
	4'-0"	6'-11"
	5'-0"	5'-6"

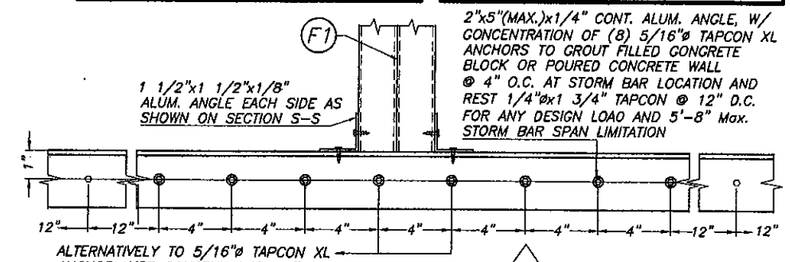

ELEVATION X

SCALE : N. T. S.

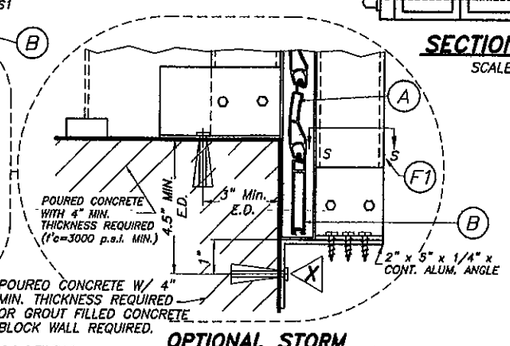

OPTIONAL STORM BAR CONNECTION

SCALE : N.T.S.

SECTION V - V

SINGLE SPAN SECTIONS AND DETAILS ARE SIMILAR TO ABOVE SHOWN WITHOUT STORM BAR & HEADERS.

FLORIDA BUILDING CODE. (High Velocity Hurricane Zone)

PRODUCT REVISED
as complying with the Florida Building Code
Acceptance No 09-0730.02
Expiration Date 09/09/2014
By Helena A. Melo
Miami Dade Product Control Division

MIAMI-DADE COUNTY

LICENSED STATE OF FLORIDA PROFESSIONAL ENGINEER No. 44167
7/14/09
P.E. SEAL/SIGNATURE/DATE

©2009 TILTECO INC.

TILTECO INC.
TILLIT TESTING & ENGINEERING COMPANY
6355 N.W. 36th. St., Ste. 305 – VIRGINIA GARDENS, FL 33166
Phone : (305) 871-1530 , Fax : (305) 871-1531
e-mail: tilteco@aol.com
EB-0006719
WALTER A. TILLIT Jr., P.E.
FLORIDA Lic. # 44167

ASSA/60mm. BERTHA ROLL-UP

WILLARD SHUTTER COMPANY, INC.
(ASSA # 180)
4420 N.W. 35th COURT
MIAMI, FL. 33142
Phone: (305) 633-0162, Fax: (305) 638-8634

REV Nº	DESCRIPTION	DATE	REV Nº	DESCRIPTION	DATE
1	OLD 05-267	07/14/09	3		
2			4		

L.G.
DRAWN BY

07/14/09
DATE

09-136
DRAWING Nº

SHEET 58 OF 14

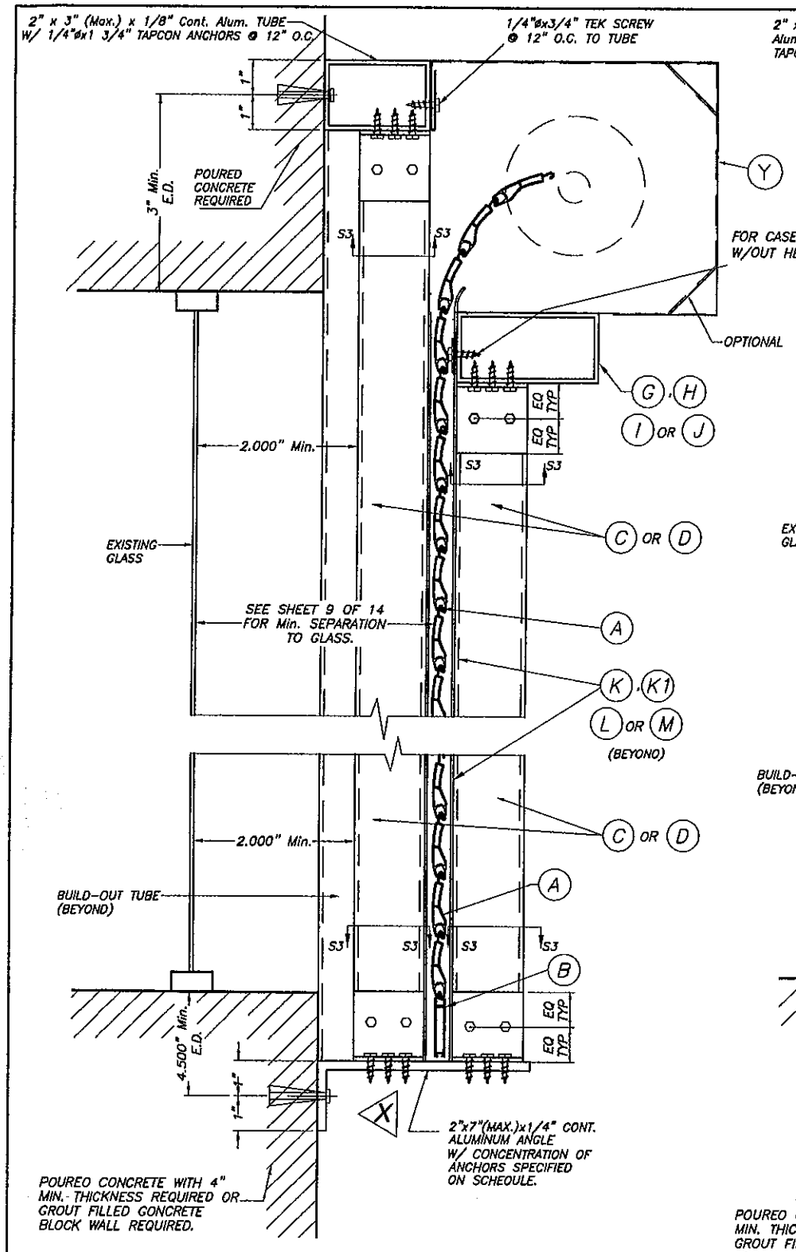

CASE I

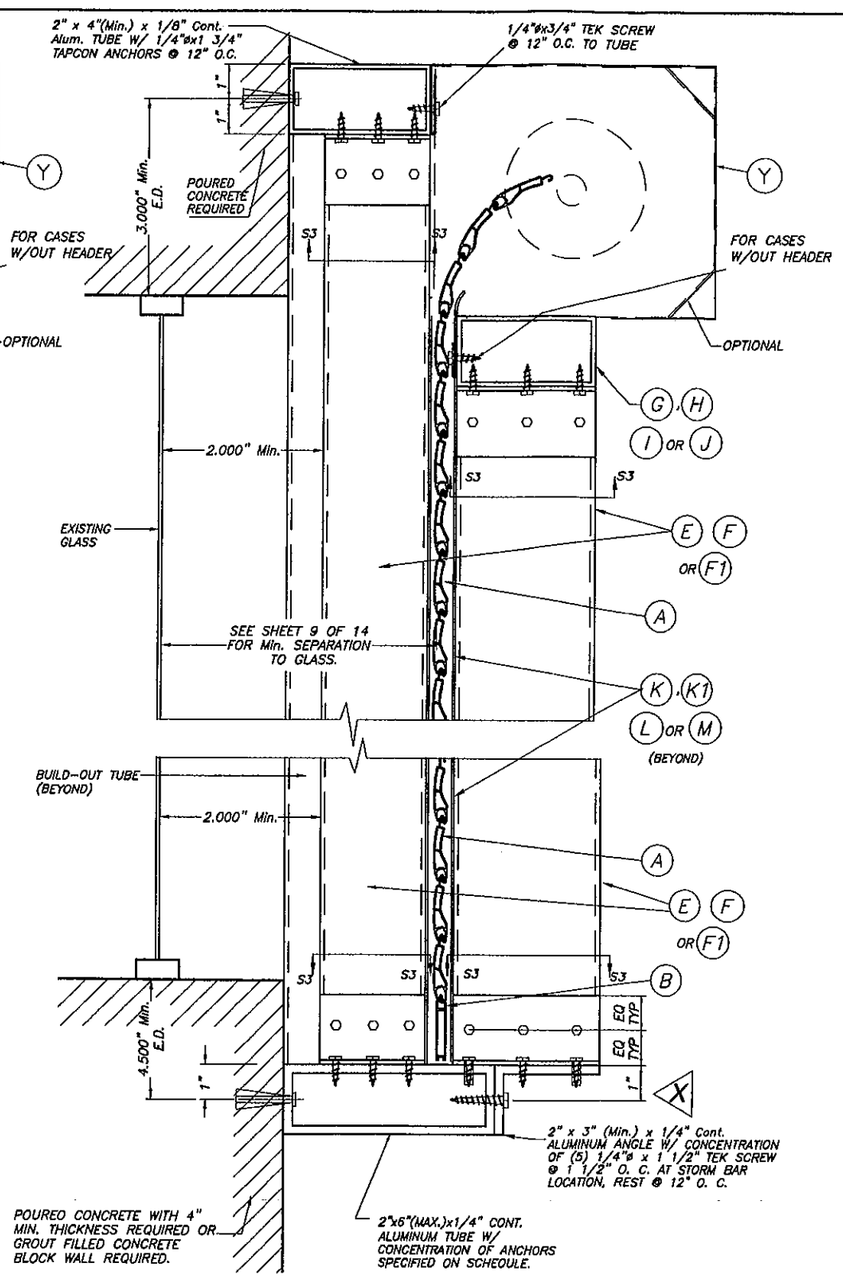

CASE II

FIXED STORM BAR CONNECTION AT BUILD-OUT INSTALLATIONS W/SHEET METAL SCREWS OR MACHINE SCREWS

SCALE : 1/4" = 1"

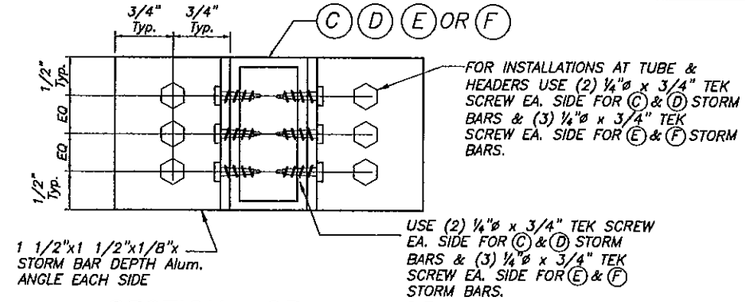

SECTION S3 – S3

SCALE : 1/2" = 1"

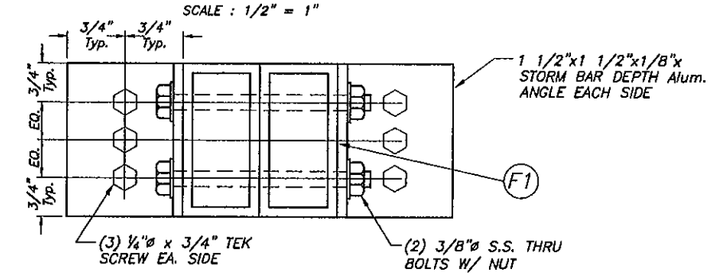

SECTION S3 – S3

SCALE : 1/2" = 1"

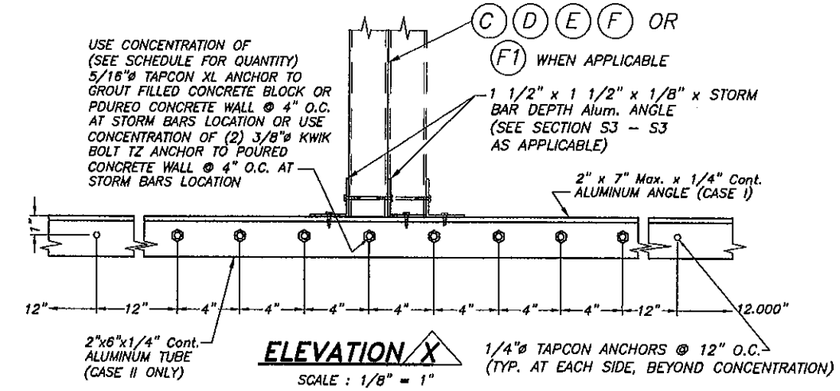

ELEVATION X

SCALE : 1/8" = 1"

ANCHORS & STORM BARS SCHEDULE FOR ELEVATION X

ANCHOR TYPE & QUANTITY	STORM BAR TYPE
(6) 5/16" ø TAPCON XL	C, D
(8) 5/16" ø TAPCON XL	E, F
(8) 5/16" ø TAPCON XL	F1 *

LIMITED TO 195psf, 3'-1" SPACING & 7'-0" MAX. SPAN STORM BAR F1

FLORIDA BUILDING CODE. (High Velocity Hurricane Zone)

SECTION V – V(3)

SINGLE SPAN SECTIONS AND DETAILS ARE SIMILAR TO ABOVE SHOWN WITHOUT STORM BAR & HEADERS.

PRODUCT REVISED
as complying with the Florida Building Code
Acceptance No 09-0730.02
Expiration Date 09/09/2014
By Helen A. Klein
Miami Dade Product Control Division
MIAMI-DADE COUNTY

LICENSED No. 44167
07/14/09
P.E. SEAL/SIGNATURE/DATE

©2009 TILTECO INC.

TILTECO INC.
TILLIT TESTING & ENGINEERING COMPANY
6355 N.W. 36th. St., Ste. 305 – VIRGINIA GARDENS, FL 33166
Phone : (305) 871-1530 , Fax : (305) 871-1531
e-mail: tilteco@aol.com
EB-0006719
WALTER A. TILLIT Jr., P.E.
FLORIDA Lic. # 44167

ASSA/60mm. BERTHA ROLL-UP

WILLARD SHUTTER COMPANY, INC.
(ASSA # 180)
4420 N.W. 35th COURT
MIAMI, FL. 33142
Phone: (305) 633-0162, Fax: (305) 638-8634

REV N°	DESCRIPTION	DATE	REV N°	DESCRIPTION	DATE
1	OLD 05-267	07/14/09	3		
2			4		

L.G.
DRAWN BY

07/14/09
DATE

09-136
DRAWING N°

SHEET 6 OF 14

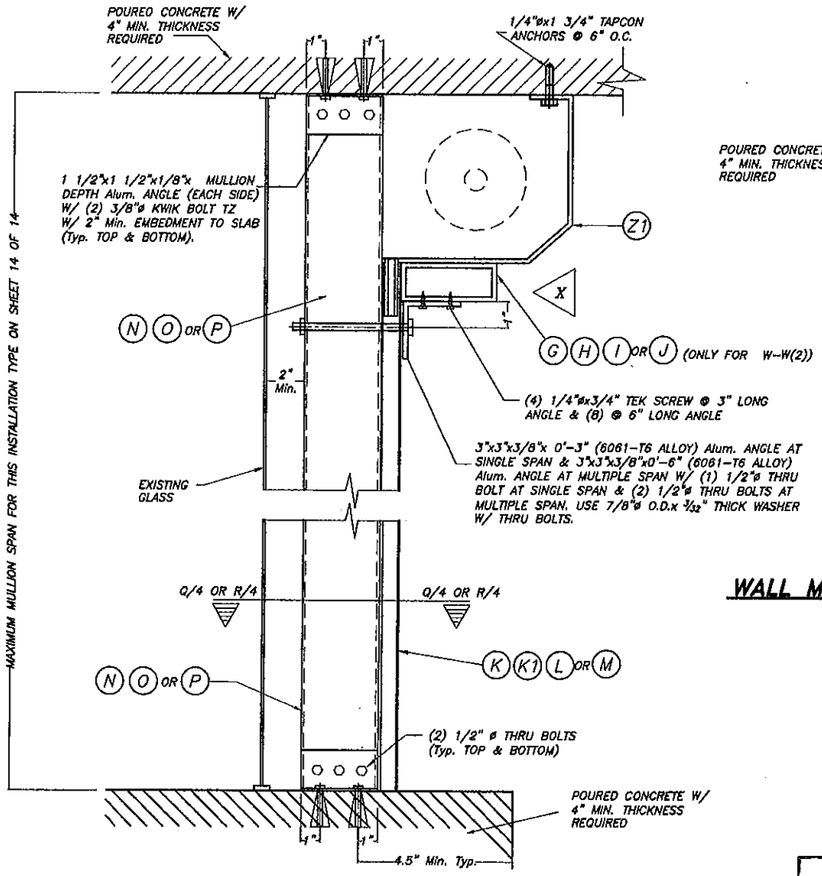

FLOOR/CEILING MOUNTING : SECTION W-W (1). W/O HEADER SECTION W-W (2). W/HEADER

SCALE : 1/8" = 1"

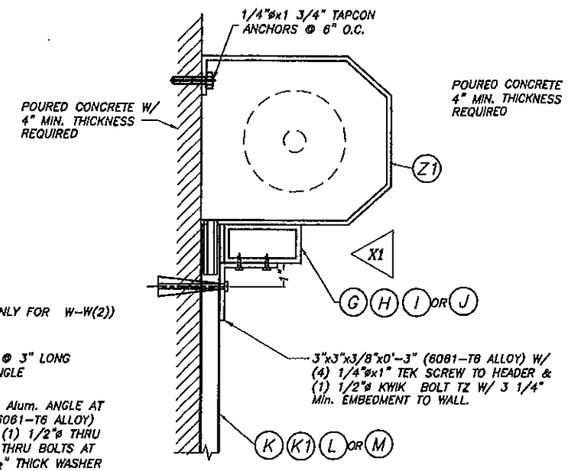

ALTERNATIVE: 1 WALL MOUNTING : SECTION W-W (3)

SCALE : 1/8" = 1"

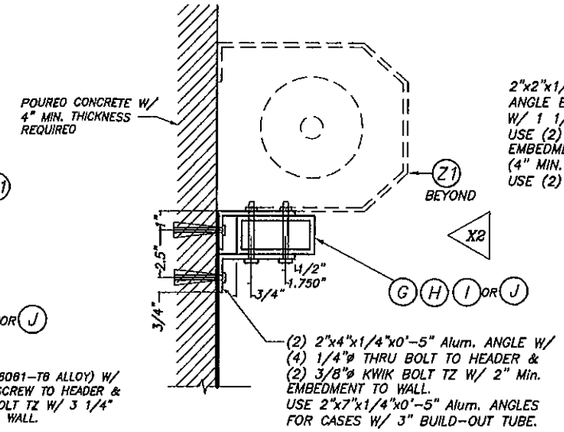

ALTERNATIVE: 2 WALL MOUNTING : SECTION W-W(3)

SCALE : 1/8" = 1"

NOTE:
THIS INSTALLATION IS ONLY VALID FOR STORM BARS WITH MAX. SPAN= 7'-0", HEADERS CON 12'-D" MAX. SINGLE SPAN & 80 p.s.f. MAXIMUM DESIGN LOAD, OR STORM BARS WITH MAX. SPAN = 6'-0", HEADERS WITH 15'-0" SINGLE 80 p.s.f. MAXIMUM DESIGN LOAD.

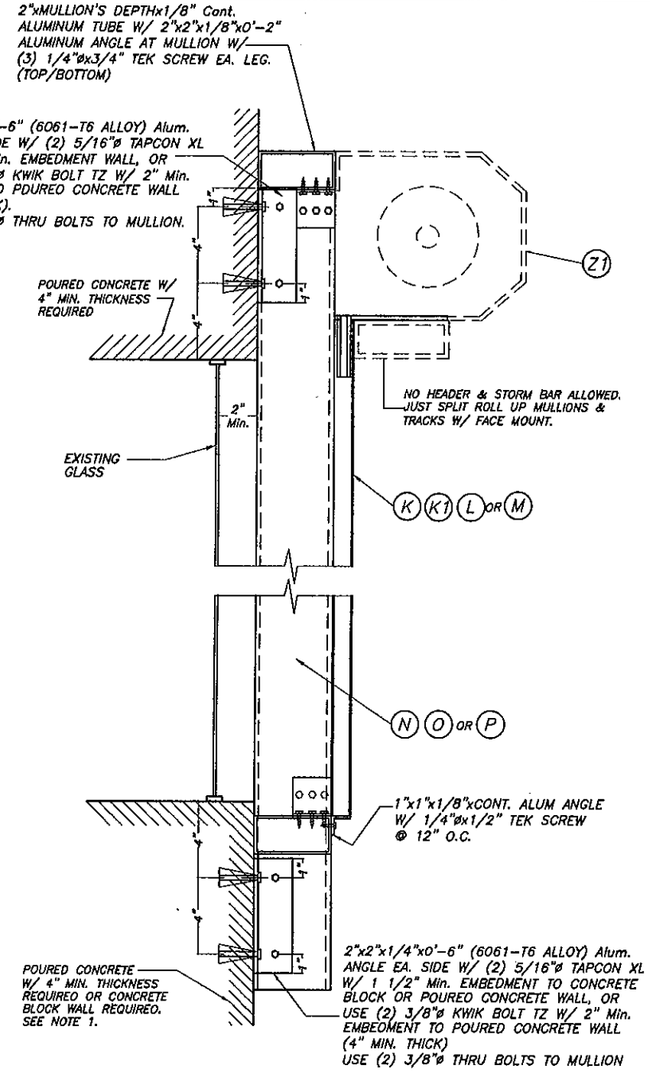

WALL MOUNTING : MULLION CONNECTION AT TOP & BOTTOM : SECTION W-W (1)

SCALE : 1/8" = 1"

NOTE 1:
EXISTING WALL MAY CONCRETE BLOCK FOR DESIGN LOADS UP TO 130.0 psf W/ 4'-0" Max. MULLION SPAN AND 4'-0" Max. MULLION SPACING AND SHALL BE 4" MIN. THICK POUREO CONCRETE FOR ALL GREATER MULLION SPAN AND LOAD COMBINATIONS.

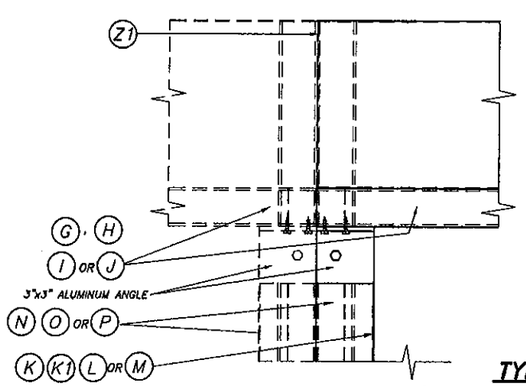

ELEVATION X

SCALE : 1/8" = 1"

TYPICAL HEADER CONNECTION AT ENDS: SECTION W-W

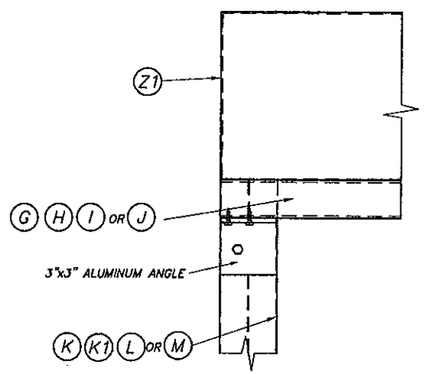

ELEVATION X1

SCALE : 1/8" = 1"

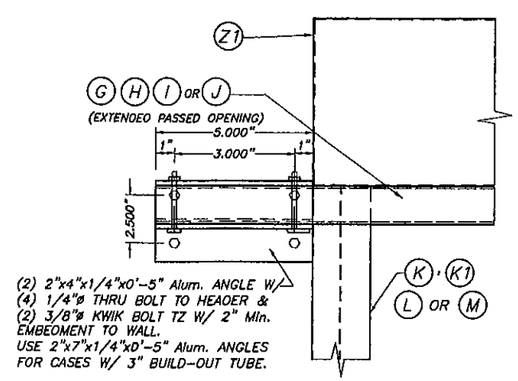

ELEVATION X2

SCALE : 1/8" = 1"

FLORIDA BUILDING CODE. (High Velocity Hurricane Zone)

PRODUCT REVISED
as complying with the Florida Building Code
Acceptance No 09-0730.02
Expiration Date 09/09/2014
By
Miami Dade Product Control Division
MIAMI-DADE COUNTY

P.E. SEAL/SIGNATURE/DATE

©2009 TILTECO INC.

TILTECO INC.
TILLIT TESTING & ENGINEERING COMPANY
6355 N.W. 36th St., Ste. 305 - VIRGINIA GARDENS, FL 33166
Phone : (305) 871-1530 , Fax : (305) 871-1531
e-mail: tilteco@aol.com
EB-0008719
WALTER A. TILLIT Jr., P.E.
FLORIDA Lic. # 44167

ASSA/60mm. BERTHA ROLL-UP

WILLARD SHUTTER COMPANY, INC.
(ASSA # 180)
4420 N.W. 35th COURT
MIAMI, FL. 33142
Phone: (305) 633-0162, Fax: (305) 638-8634

REV Nº	DESCRIPTION	DATE	REV Nº	DESCRIPTION	DATE
1	OLD 05-267	07/14/09	3		
2			4		

L.G.
DRAWN BY

07/14/09
DATE

09-136
DRAWING Nº

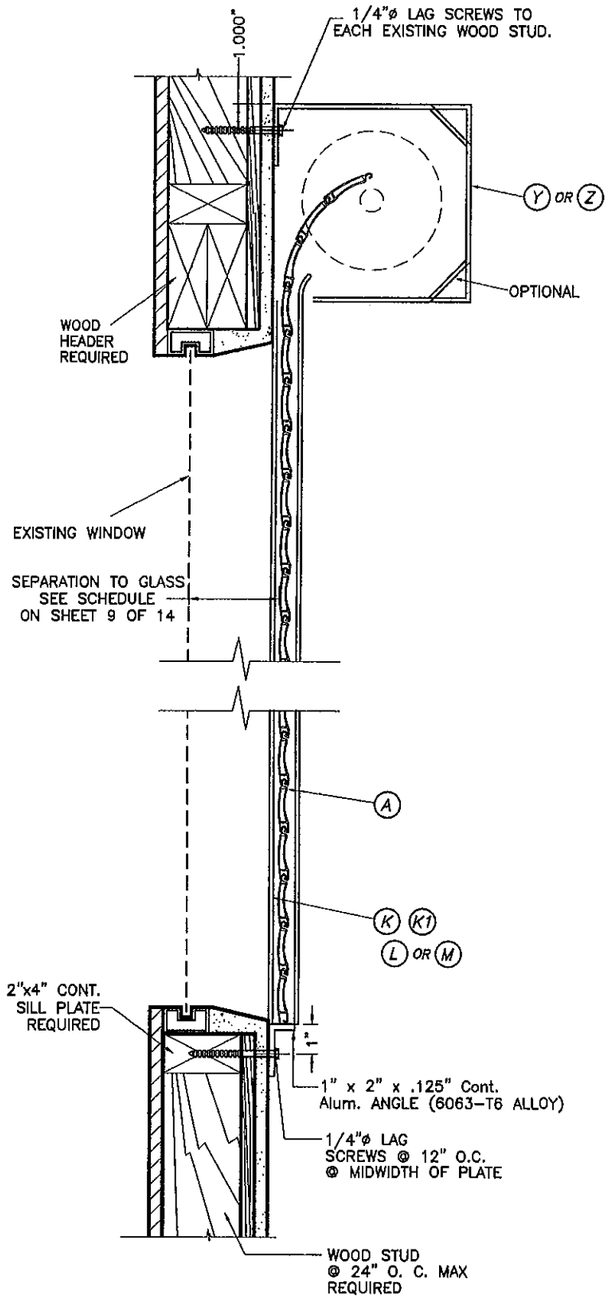

WALL MOUNTING INSTALLATION SINGLE SPAN CONDITION

N. T. S.

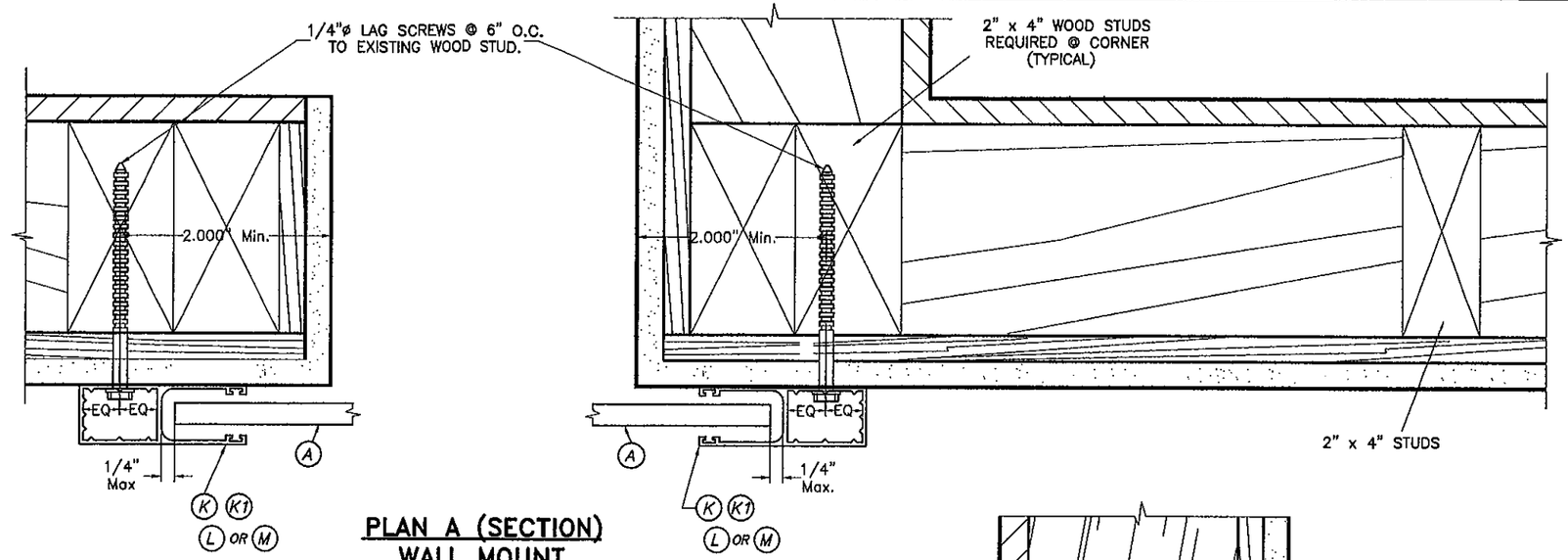

PLAN A (SECTION) WALL MOUNT

SCALE : 3/8" = 1"

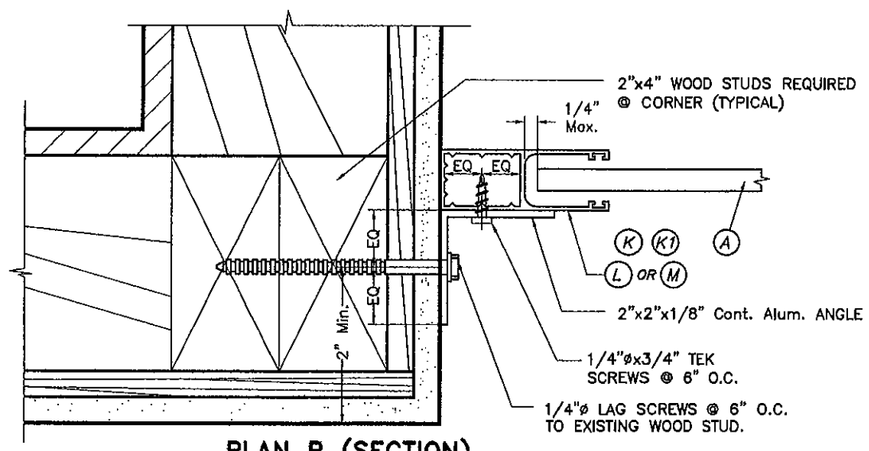

PLAN B (SECTION) INSIDE MOUNT

SCALE : 3/8" = 1"

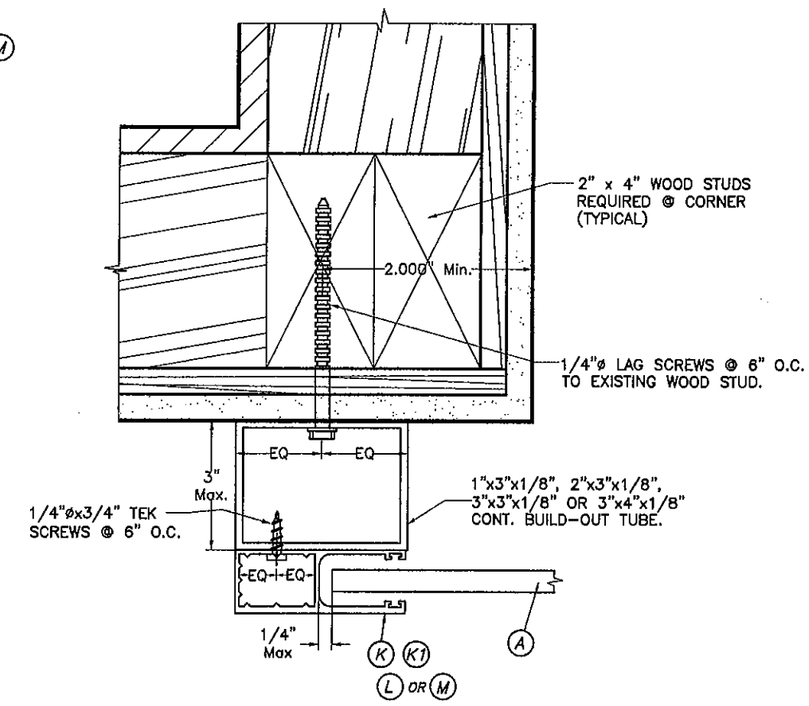

PLAN C (SECTION) BUILD-OUT

SCALE : 3/8" = 1"

NOTES:

1. INSTALLATIONS ARE ONLY VALID FOR BUILDINGS WITH DESIGN LOADS UP TO 75.0 psf.
2. FOR NEW FRAME CONSTRUCTION: WOOD MEMBER TO BE SOUTHERN PINE No. 2 W/ SPECIFIC DENSITY OF 0.55 OR EQUAL.
3. THIS APPROVAL INCLUDES INSTALLATION IN WOOD FOR SINGLE UNITS WITHOUT STORM BARS, MULLIONS & HEADERS AS SHOWN IN THIS SHEET.

FLORIDA BUILDING CODE. (High Velocity Hurricane Zone)

PRODUCT REVISED
as complying with the Florida Building Code
Acceptance No 09-0730.02
Expiration Date 09/09/2014
By Helen A. Miller
Miami Dade Product Control Division MIAMI-DADE COUNTY

7/14/09
P.E. SEAL/SIGNATURE/DATE

©2009 TILTECO INC.

TILTECO INC.
TILLIT TESTING & ENGINEERING COMPANY
6355 N.W. 36th. St., Ste. 305 - VIRGINIA GARDENS, Fl. 33166
Phone : (305) 871-1530 , Fax : (305) 871-1531
e-mail: tilteco@aol.com
EB-0006719
WALTER A. TILLIT Jr., P.E.
FLORIDA Lic. # 44167

ASSA/60mm. BERTHA ROLL-UP

WILLARD SHUTTER COMPANY, INC.
(ASSA # 180)
4420 N.W. 35th COURT
MIAMI, FL. 33142
Phone: (305) 633-0162, Fax: (305) 638-8634

REV N°	DESCRIPTION	DATE	REV N°	DESCRIPTION	DATE
1	OLD 05-267	07/14/09	3		
2			4		

L.G.
DRAWN BY

07/14/09
DATE

09-136
DRAWING N°

SHEET 8 OF 14

SLAT PERFORMANCE CHART MAXIMUM DESIGN PRESSURE RATING "W" (psf) AND CORRESPONDING MAXIMUM SLAT SPAN "L" (ft) FOR TYPE 1 SLAT

(USE MAXIMUM VALUES BETWEEN POSITIVE AND NEGATIVE LOAD)

SLAT TYPE / Max. DESIGN LOAD "W" (p.s.f.)	MAXIMUM SLAT SPAN "L" (ft)	MINIMUM SEPARATION TO GLASS (in)	
	SINGLE & MULTIPLE UNIT *	SINGLE & MULTIPLE UNIT **	SINGLE & MULTIPLE UNIT ***
40.0	6'-5"	4 3/8"	3 5/8"
45.0	6'-2"	4"	3 1/2"
50.0	5'-11"	4"	3 3/8"
55.0	5'-9"	4"	3 3/8"
60.0	5'-7"	4"	3 1/4"
65.0	5'-5"	4"	3 1/4"
70.0	5'-4'	4"	3 1/8"
75.0	5'-2"	4"	3 1/8"
80.0	5'-1"	4"	3"
85.0	5'-0"	4"	3"
90.0	4'-11"	4"	3"
95.0	4'-10"	4"	3"
100.0	4'-9"	4"	3"
105.0	4'-8"	4"	3"
110.0	4'-7"	4"	2 7/8"
115.0	4'-6"	2 7/8"	2 7/8"
120.0	4'-5"	2 7/8"	2 7/8"
125.0	4'-5"	2 7/8"	2 7/8"
130.0	4'-4"	2 3/4"	2 3/4"
135.0	4'-3"	2 3/4"	2 3/4"
140.0	4'-3"	2 3/4"	2 3/4"
145.0	4'-2"	2 3/4"	2 3/4"
150.0	4'-1"	2 3/4"	2 3/4"
155.0	4'-1"	2 3/4"	2 3/4"
160.0	4'-0"	2 5/8"	2 5/8"
165.0	4'-0"	2 5/8"	2 5/8"
170.0	3'-11"	2 5/8"	2 5/8"
175.0	3'-11"	2 5/8"	2 5/8"
180.0	3'-11"	2 5/8"	2 5/8"
185.0	3'-10"	2 5/8"	2 5/8"
190.0	3'-10"	2 5/8"	2 5/8"
195.0	3'-9"	2 1/2"	2 1/2"

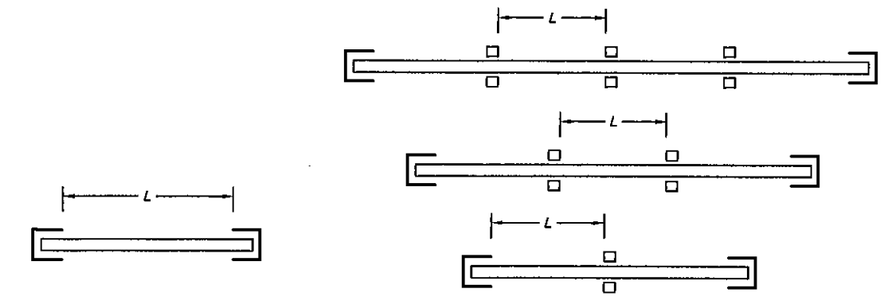

SINGLE SPAN

MULTIPLE SPAN

SPAN LAYOUT

* SPANS VALID FOR EVERY INSTALLATION LOCATED AT ANY ELEVATION OF BUILDING MEASURED AT BOTTOM OF SHUTTER. MINIMUM SEPARATION TO GLASS FOR SINGLE AND MULTIPLE UNITS SHALL BE MEASURED FROM BACK OF SLAT TO GLASS.

** MINIMUM SEPARATION TO GLASS FOR SHUTTERS INSTALLED WITHIN THE FIRST 30'-0" ELEVATION OF BUILDING AND MAXIMUM SPAN. SEE TABLE 1 FOR Min. SEPARATION TO GLASS FOR SPANS LESS THAN THE Max. ALLOWED.

*** MINIMUM SEPARATION TO GLASS FOR SHUTTERS INSTALLED ABOVE 30'-0" ELEVATION OF BUILDING, MEASURED AT BOTTOM OF SHUTTER.

TABLE 1:

SLAT SPAN (ft.)	MINIMUM SEPARATION TO GLASS
48" OR LESS	2 5/8"
> 48" TO 54"	2 7/8"
> 54" TO 74"	4"
> 74" TO 77"	4 3/8"

FLORIDA BUILDING CODE. (High Velocity Hurricane Zone)

PRODUCT REVISED
as complying with the Florida Building Code
Acceptance No 09-0730.02
Expiration Date 09/09/2014
By Helen H. Walker
Miami Dade Product Control Division
MIAMI-DADE COUNTY

LICENSED NO. 44167 STATE OF FLORIDA
07/14/09
P.E. SEAL/SIGNATURE/DATE

©2009 TILTECO INC.

TILTECO INC.
TILLIT TESTING & ENGINEERING COMPANY
6355 N.W. 36th. St., Ste. 305 - VIRGINIA GARDENS, FL 33166
Phone : (305) 871-1530 , Fax : (305) 871-1531
e-mail: tilteco@aol.com
EB-0006719
WALTER A. TILLIT Jr., P.E.
FLORIDA Lic. # 44167

ASSA/60mm. BERTHA ROLL-UP

WILLARD SHUTTER COMPANY, INC.
(ASSA # 180)
4420 N.W. 35th COURT
MIAMI, FL. 33142
Phone: (305) 633-0162, Fax: (305) 638-8634

REV N°	DESCRIPTION	DATE	REV N°	DESCRIPTION	DATE
1	OLD 05-267	07/14/09	3		
2			4		

L.G.
DRAWN BY

07/14/09
DATE

09-136
DRAWING N°

SHEET 9 OF 14

STORM BAR LOADING CHART
MAXIMUM DESIGN PRESSURE RATING "W" (p. s. f.) AND CORRESPONDING MAXIMUM SPAN "L" FOR A GIVEN TYPE OF STORM BAR AND STORM BAR SPACING.

(USE MAXIMUM VALUES BETWEEN POSITIVE AND NEGATIVE LOAD)

MAXIMUM DESIGN LOAD "W" (p.s.f.)	TYPE 1 STORM BAR 2" x 2" x 1/4" (C)					TYPE 2 STORM BAR 2" x 3" x 1/8" (D)					TYPE 3 STORM BAR 2" x 4" x 1/8" (E)				
	* STORM BAR SPACING					* STORM BAR SPACING					* STORM BAR SPACING				
	≤ 3'-0"	3' TO 4'	4' TO 5'	5' TO 6'	6' TO 6.5'	≤ 3'-0"	3' TO 4'	4' TO 5'	5' TO 6'	6' TO 6.5'	≤ 3'-0"	3' TO 4'	4' TO 5'	5' TO 6'	6' TO 6.5'
40 OR LESS	7'-7"	7'-1"	6'-9"	6'-2"	5'-11"	8'-0"	7'-9"	6'-11"	6'-4"	6'-1"	10'-0"	9'-6"	8'-6"	7'-9"	7'-5"
45	7'-5"	6'-11"	6'-4"	5'-10"	5'-7"	8'-0"	7'-4"	6'-7"	6'-0"	5'-9"	9'-11"	8'-11"	8'-0"	7'-4"	7'-0"
50	7'-3"	6'-9"	6'-0"	5'-6"	5'-4"	8'-0"	7'-0"	6'-3"	5'-8"	5'-6"	9'-8"	8'-6"	7'-7"	6'-11"	6'-8"
55	7'-0"	6'-5"	5'-9"	5'-3"	—	7'-8"	6'-8"	5'-6"	5'-6"	—	9'-4"	8'-1"	7'-3"	6'-7"	—
60	6'-11"	6'-2"	5'-6"	5'-0"	—	7'-4"	6'-4"	5'-8"	5'-2"	—	8'-11"	7'-9"	6'-11"	6'-4"	—
65	6'-9"	5'-11"	5'-4"	4'-10"	—	7'-1"	6'-1"	5'-5"	5'-0"	—	8'-7"	7'-5"	6'-8"	6'-1"	—
70	6'-7"	5'-8"	5'-1"	4'-8"	—	6'-10"	5'-11"	5'-3"	4'-10"	—	8'-3"	7'-2"	6'-5"	5'-10"	—
75	6'-4"	5'-6"	4'-11"	4'-6"	—	6'-7"	5'-8"	5'-1"	4'-8"	—	8'-0"	6'-11"	6'-2"	5'-8"	—
80	6'-2"	5'-4"	4'-9"	4'-4"	—	6'-4"	5'-6"	4'-11"	4'-6"	—	7'-9"	6'-9"	6'-0"	5'-6"	—
85	6'-0"	5'-2"	4'-8"	4'-3"	—	6'-2"	5'-4"	4'-9"	4'-4"	—	7'-6"	6'-6"	5'-10"	5'-4"	—
90	5'-10"	5'-0"	4'-6"	4'-1"	—	6'-0"	5'-2"	4'-8"	4'-3"	—	7'-4"	6'-4"	5'-8"	5'-2"	—
95	5'-8"	4'-11"	4'-5"	4'-0"	—	5'-10"	5'-1"	4'-6"	4'-1"	—	7'-1"	6'-2"	5'-6"	5'-0"	—
100	5'-6"	4'-9"	4'-3"	3'-11"	—	5'-8"	4'-11"	4'-5"	4'-0"	—	6'-11"	6'-0"	5'-4"	4'-11"	—
105	5'-5"	4'-8"	4'-2"	3'-10"	—	5'-7"	4'-10"	4'-4"	3'-11"	—	6'-9"	5'-10"	5'-3"	4'-9"	—
110	5'-3"	4'-7"	4'-1"	—	—	5'-5"	4'-8"	4'-2"	—	—	6'-7"	5'-9"	5'-1"	—	—
115	5'-2"	4'-5"	4'-0"	—	—	5'-4"	4'-7"	4'-1"	—	—	6'-6"	5'-7"	5'-0"	—	—
120	5'-0"	4'-4"	3'-11"	—	—	5'-2"	4'-6"	4'-0"	—	—	6'-4"	5'-6"	4'-11"	—	—
125	4'-11"	4'-3"	3'-10"	—	—	5'-1"	4'-5"	3'-11"	—	—	6'-2"	5'-4"	4'-10"	—	—
130	4'-10"	4'-2"	3'-9"	—	—	5'-0"	4'-4"	3'-10"	—	—	6'-1"	5'-3"	4'-9"	—	—
135	4'-9"	4'-1"	3'-8"	—	—	4'-11"	4'-3"	3'-9"	—	—	6'-0"	5'-2"	4'-7"	—	—
140	4'-8"	4'-0"	3'-7"	—	—	4'-10"	4'-2"	3'-9"	—	—	5'-10"	5'-1"	4'-6"	—	—
145	4'-7"	4'-0"	3'-7"	—	—	4'-9"	4'-1"	3'-8"	—	—	5'-9"	5'-0"	4'-6"	—	—
150	4'-6"	3'-11"	3'-6"	—	—	4'-8"	4'-0"	3'-7"	—	—	5'-8"	4'-11"	4'-5"	—	—
155	4'-5"	3'-10"	3'-5"	—	—	4'-7"	3'-11"	3'-6"	—	—	5'-7"	4'-10	4'-4"	—	—
160	4'-4"	3'-9"	3'-4"	—	—	4'-6"	3'-11"	3'-6"	—	—	5'-6"	4'-9"	4'-3"	—	—
165	4'-3"	3'-9"	3'-4"	—	—	4'-5"	3'-10"	3'-5"	—	—	5'-5"	4'-8"	4'-2"	—	—
170	4'-3"	3'-8"	—	—	—	4'-4"	3'-9"	—	—	—	5'-4"	4'-7"	—	—	—
175	4'-2"	3'-7"	—	—	—	4'-4"	3'-9"	—	—	—	5'-3"	4'-6"	—	—	—
180	4'-1"	3'-7"	—	—	—	4'-3"	3'-8"	—	—	—	5'-2"	4'-6"	—	—	—
185	4'-1"	3'-6"	—	—	—	4'-2"	3'-7"	—	—	—	5'-1"	4'-5"	—	—	—
190	4'-0"	3'-6"	—	—	—	4'-1"	3'-7"	—	—	—	5'-0"	4'-4"	—	—	—
195	3'-11"	3'-5"	—	—	—	4'-1"	3'-6"	—	—	—	5'-0"	4'-4"	—	—	—

* STORM BAR SPACING SHALL BE SUCH THAT MAXIMUM SLAT SPAN SHALL NOT BE EXCEEDED.

FLORIDA BUILDING CODE. (High Velocity Hurricane Zone)

PRODUCT REVISED
as complying with the Florida
Building Code
Acceptance No 09-0730.02
Expiration Date 09/09/2014
By
Miami Dade Product Control
Division
MIAMI-DADE COUNTY

7/14/09
P.E. SEAL/SIGNATURE/DATE

©2009 TILTECO INC.

TILTECO INC.
TILLIT TESTING & ENGINEERING COMPANY
8355 N.W. 36th. St., Ste. 305 – VIRGINIA GARDENS, Fl. 33166
Phone : (305) 871-1530 , Fax : (305) 871-1531
e-mail: tilteco@aol.com
EB-0006719
WALTER A. TILLIT Jr., P.E.
FLORIDA Lic. # 44167

ASSA/60mm. BERTHA ROLL-UP

WILLARD SHUTTER COMPANY, INC.
(ASSA # 18D)
4420 N.W. 35th COURT
MIAMI, FL. 33142
Phone: (305) 633-0162, Fax: (305) 638-8634

REV N°	DESCRIPTION	DATE	REV N°	DESCRIPTION	DATE
1	OLD 05-267	07/14/09	3		
2			4		

L.G.
DRAWN BY

07/14/09
DATE

09-136
DRAWING N°

STORM BAR LOADING CHART

MAXIMUM DESIGN PRESSURE RATING "W" (p. s. f.) AND CORRESPONDING MAXIMUM SPAN "L" FOR A GIVEN TYPE OF STORM BAR AND STORM BAR SPACING.

(USE MAXIMUM VALUES BETWEEN POSITIVE AND NEGATIVE LOAD)

MAXIMUM DESIGN LOAD "W" (p.s.f.)	TYPE 4 STORM BAR 2" x 4" x .250" (F)					TYPE 5 STORM BAR (2) 2" x 4" x .250" (F1)				
	* STORM BAR SPACING					* STORM BAR SPACING				
	≤ 3'-0"	3' TO 4'	4' TO 5'	5' TO 6'	6' TO 6.5'	≤ 3'-0"	3' TO 4'	4' TO 5'	5' TO 6'	6' TO 6.5'
40 OR LESS	11'-10"	11'-0"	10'-5"	9'-11"	9'-9"	14'-1"	13'-1"	12'-5"	11'-10"	11'-7"
45	11'-6"	10'-8"	10'-1"	9'-8"	9'-4"	13'-8"	12'-9"	12'-0"	11'-6"	11'-3"
50	11'-2"	10'-5"	9'-10"	9'-2"	8'-10"	13'-4"	12'-5"	11'-9"	11'-2"	11'-0"
55	10'-11"	10'-2"	9'-7"	8'-9"	–	13'-0"	12'-1"	11'-5"	10'-11"	–
60	10'-8"	9'-11"	9'-2"	8'-5"	–	12'-9"	11'-10"	11'-2"	10'-8"	–
65	10'-6"	9'-9"	8'-10"	8'-1"	–	12'-6"	11'-7"	11'-0"	10'-6"	–
70	10'-4"	9'-6"	8'-6"	7'-9"	–	12'-3"	11'-5"	10'-9"	10'-4"	–
75	10'-1"	9'-2"	8'-3"	7'-6"	–	12'-0"	11'-2"	10'-7"	10'-1"	–
80	9'-11"	8'-11"	7'-11"	7'-3"	–	11'-10"	11'-0"	10'-5"	9'-11"	–
85	9'-10"	8'-7"	7'-9"	7'-0"	–	11'-8"	10'-10"	10'-3"	9'-10"	–
90	9'-8"	8'-5"	7'-6"	6'-10"	–	11'-6"	10'-8"	10'-1"	9'-8"	–
95	9'-5"	8'-2"	7'-4"	6'-8"	–	11'-4"	10'-7"	10'-0"	9'-5"	–
100	9'-2"	7'-11"	7'-1"	6'-6"	–	11'-2"	10'-5"	9'-10"	9'-2"	–
105	8'-11"	7'-9"	6'-11"	6'-4"	–	11'-1"	10'-4"	9'-9"	8'-11"	–
110	8'-9"	7'-7"	6'-9"	–	–	10'-11"	10'-2"	9'-7"	–	–
115	8'-7"	7'-5"	6'-8"	–	–	10'-10"	10'-1"	9'-4"	–	–
120	8'-5"	7'-3"	6'-6"	–	–	10'-8"	9'-11"	9'-2"	–	–
125	8'-3"	7'-1"	6'-4"	–	–	10'-7"	9'-10"	9'-0"	–	–
130	8'-1"	7'-0"	6'-3"	–	–	10'-6"	9'-9"	8'-10"	–	–
135	7'-11"	6'-10"	6'-1"	–	–	10'-5"	9'-8"	8'-8"	–	–
140	7'-9"	6'-9"	6'-0"	–	–	10'-4"	9'-6"	8'-6"	–	–
145	7'-7"	6'-7"	5'-11"	–	–	10'-2"	9'-4"	8'-4"	–	–
150	7'-6"	6'-6"	5'-10"	–	–	10'-1"	9'-2"	8'-2"	–	–
155	7'-4"	6'-5"	5'-9"	–	–	10'-0"	9'-0"	8'-1"	–	–
160	7'-3"	6'-3"	5'-7"	–	–	9'-11"	8'-11"	7'-11"	–	–
165	7'-2"	6'-2"	5'-6"	–	–	9'-11"	8'-9"	7'-10"	–	–
170	7'-0"	6'-1"	–	–	–	9'-10"	8'-7"	–	–	–
175	6'-11"	6'-0"	–	–	–	9'-9"	8'-6"	–	–	–
180	6'-10"	5'-11"	–	–	–	9'-8"	8'-4"	–	–	–
185	6'-9"	5'-10"	–	–	–	9'-6"	8'-3"	–	–	–
190	6'-8"	5'-9"	–	–	–	9'-5"	8'-2"	–	–	–
195	6'-7"	5'-8"	–	–	–	9'-3"	8'-0"	–	–	–

* STORM BAR SPACING SHALL BE SUCH THAT MAXIMUM SLAT SPAN SHALL NOT BE EXCEEDED.

FLORIDA BUILDING CODE. (High Velocity Hurricane Zone)

PRODUCT REVISED
as complying with the Florida
Building Code
Acceptance No 09-0730.02
Expiration Date 09/09/2014
By
Miami Dade Product Control
Division
MIAMI-DADE COUNTY

P.E. SEAL/SIGNATURE/DATE

©2009 TILTECO INC.

TILTECO INC.
TILLIT TESTING & ENGINEERING COMPANY
8355 N.W. 36th. St., Ste. 305 – VIRGINIA GARDENS, Fl. 33166
Phone : (305) 871-1530 , Fax : (305) 871-1531
e-mail: tilteco@aol.com
EB-0006719
WALTER A. TILLIT Jr., P.E.
FLORIDA Lic. # 44167

ASSA/60mm. BERTHA ROLL-UP

WILLARD SHUTTER COMPANY, INC.
(ASSA # 180)
4420 N.W. 35th COURT
MIAMI, FL. 33142
Phone: (305) 633-0162, Fax: (305) 638-8634

REV N°	DESCRIPTION	DATE	REV N°	DESCRIPTION	DATE
1	OLD 05-287	07/14/09	3		
2			4		

L.G.
DRAWN BY

07/14/09
DATE

09-136
DRAWING N°

SHEET 11 OF 14

HEADER LOADING CHART MAXIMUM DESIGN PRESSURE RATING "W" (psf) AND CORRESPONDING MAXIMUM SPAN "L" FOR A GIVEN TYPE OF HEADER.

(USE MAXIMUM VALUES BETWEEN POSITIVE AND NEGATIVE LOAD)

MAXIMUM DESIGN LOAD "W" (p.s.f.)	TYPE 1 HEADER (G) 2" x 3" x 1/8"		TYPE 2 HEADER (H) 2" x 4" x 1/8"			TYPE 3 HEADER (I) 2" x 4" x 1/4"					TYPE 4 HEADER (J) 2" x 6" x 1/8"				
	STORM BAR HEIGHT		STORM BAR HEIGHT			STORM BAR HEIGHT					STORM BAR HEIGHT				
	⩽ 5'-0"	5' TO 7'	⩽ 5'-0"	5' TO 8'	8' TO 10'	⩽ 6'-0"	6' TO 8'	8' TO 10'	10' TO 12'	12' TO 14'	⩽ 6'-0"	6' TO 8'	8' TO 10'	10' TO 12'	12' TO 14'
40.0 OR LESS	9'-11"	8'-4"	12'-2"	9'-8"	8'-8"	14'-10"	12'-10"	11'-6"	10'-6"	9'-9"	15'-1"	13'-1"	11'-8"	10'-8"	9'-11"
45.0	9'-4"	7'-11"	11'-6"	9'-1"	8'-2"	14'-0"	12'-2"	10'-10"	9'-11"	9'-2"	14'-3"	12'-4"	11'-0"	10'-1"	9'-4"
50.0	8'-10"	7'-6"	10'-11"	8'-8"	7'-9"	13'-4"	11'-6"	10'-4"	9'-5"	8'-8"	13'-6"	11'-8"	10'-6"	9'-7"	8'-10"
55.0	8'-5"	7'-2"	10'-5"	8'-3"	7'-4"	12'-8"	11'-0"	9'-10"	9'-0"	8'-4"	12'-11"	11'-2"	10'-0"	9'-1"	8'-5"
60.0	8'-1"	6'-10"	10'-0"	7'-11"	7'-1"	12'-2"	10'-6"	9'-5"	9'-7"	7'-11"	12'-4"	10'-8"	9'-7"	8'-9"	8'-1"
65.0	7'-9"	6'-7"	9'-7"	7'-7"	6'-9"	11'-8"	10'-1"	9'-0"	8'-3"	7'-8"	11'-10"	10'-3"	9'-2"	8'-5"	7'-9"
70.0	7'-6"	6'-4"	9'-3"	7'-4"	6'-6"	11'-3"	9'-9"	8'-8"	7'-11"	7'-4"	11'-5"	9'-11"	8'-10"	8'-1"	7'-6"
75.0	7'-3"	6'-1"	8'-11"	7'-1"	6'-4"	10'-10"	9'-5"	8'-5"	7'-8"	7'-1"	11'-0"	9'-7"	8'-7"	7'-10"	7'-3"
80.0	7'-0"	5'-11"	8'-8"	6'-10"	6'-1"	10'-6"	9'-1"	8'-2"	7'-5"	6'-11"	10'-8"	9'-3"	8'-3"	7'-7"	7'-0"
85.0	6'-9"	5'-9"	8'-5"	6'-7"	5'-11"	10'-2"	8'-10"	7'-11"	7'-3"	6'-8"	10'-4"	9'-0"	8'-0"	7'-4"	6'-9"
90.0	6'-7"	5'-7"	8'-2"	6'-5"	5'-9"	9'-11"	8'-7"	7'-8"	7'-0"	6'-6"	10'-1"	8'-9"	7'-10"	7'-1"	6'-7"
95.0	6'-5"	5'-5"	7'-11"	6'-3"	5'-7"	9'-8"	8'-4"	7'-6"	6'-10"	6'-4"	9'-10"	8'-6"	7'-7"	6'-11"	6'-5"
100.0	6'-3"	5'-3"	7'-9"	6'-1"	5'-6"	9'-5"	8'-2"	7'-3"	6'-8"	6'-2"	9'-7"	8'-3"	7'-5"	6'-9"	6'-3"
105.0	6'-1"	5'-2"	7'-6"	6'-0"	5'-4"	9'-2"	7'-11"	7'-1"	6'-6"	6'-0"	9'-4"	8'-1"	7'-3"	6'-7"	6'-1"
110.0	6'-0"	5'-1"	7'-4"	5'-10"	5'-2"	9'-0"	7'-9"	6'-11"	6'-4"	5'-10"	9'-1"	7'-11"	7'-1"	6'-5"	6'-0"
115.0	5'-10"	4'-11"	7'-2"	5'-8"	5'-1"	8'-9"	7'-7"	6'-9"	6'-2"	5'-9"	8'-11"	7'-9"	6'-11"	6'-4"	5'-10"
120.0	5'-9"	4'-10"	7'-1"	5'-7"	5'-0"	8'-7"	7'-5"	6'-8"	6'-1"	5'-7"	8'-9"	7'-7"	6'-9"	6'-2"	5'-9"
125.0	5'-7"	4'-9"	6'-11"	5'-6"	4'-11"	8'-5"	7'-3"	6'-6"	5'-11"	5'-6"	8'-7"	7'-5"	6'-7"	6'-1"	5'-7"
130.0	5'-6"	4'-8"	6'-9"	5'-4	4'-9"	8'-3"	7'-2"	6'-5"	5'-10"	5'-5"	8'-5"	7'-3"	6'-6"	5'-11"	5'-6"
135.0	5'-5"	4'-7"	6'-8"	5'-3"	4'-8"	8'-1"	7'-0"	6'-3"	5'-9"	5'-4"	8'-3"	7'-1"	6'-4"	5'-10"	5'-5"

FLORIDA BUILDING CODE. (High Velocity Hurricane Zone)

PRODUCT REVISED
as complying with the Florida
Building Code
Acceptance No 09-0730.02
Expiration Date 09/09/2014
By
Miami Dade Product Control
Division MIAMI-DADE COUNTY

7/14/09
P.E. SEAL/SIGNATURE/DATE

©2009 TILTECO INC.

TILTECO INC.
TILLIT TESTING & ENGINEERING COMPANY
6355 N.W. 36th. St., Ste. 305 - VIRGINIA GARDENS, Fl. 33166
Phone : (305) 871-1530 , Fax : (305) 871-1531
e-mail: tilteco@aol.com
EB-0006719
WALTER A. TILLIT Jr., P.E.
FLORIDA Lic. # 44167

ASSA/60mm. BERTHA ROLL-UP

WILLARD SHUTTER COMPANY, INC.
(ASSA # 180)
4420 N.W. 35th COURT
MIAMI, FL. 33142
Phone: (305) 633-0162, Fax: (305) 638-8634

REV N°	DESCRIPTION	DATE	REV N°	DESCRIPTION	DATE
1	OLD 05-267	07/14/09	3		
2			4		

L.G.
DRAWN BY

07/14/09
DATE

09-136
DRAWING N°

SHEET 12 OF 14

HEADER LOADING CHART MAXIMUM DESIGN PRESSURE RATING "W" (psf) AND CORRESPONDING MAXIMUM SPAN "L" FOR A GIVEN TYPE OF HEADER.

(USE MAXIMUM VALUES BETWEEN POSITIVE AND NEGATIVE LOAD)

MAXIMUM DESIGN LOAD "W" (p.s.f.)	TYPE 1 HEADER (G) 2" x 3" x 1/8"		TYPE 2 HEADER (H) 2" x 4" x 1/8"			TYPE 3 HEADER (I) 2" x 4" x 1/4"					TYPE 4 HEADER (J) 2" x 6" x 1/8"				
	STORM BAR HEIGHT		STORM BAR HEIGHT			STORM BAR HEIGHT					STORM BAR HEIGHT				
	⩽ 5'-0"	5' TO 7'	⩽ 5'-0"	5' TO 8'	8' TO 10'	⩽ 6'-0"	6' TO 8'	8' TO 10'	10' TO 12'	12' TO 14'	⩽ 6'-0"	6' TO 8'	8' TO 10'	10' TO 12'	12' TO 14'
140.0	5'-3"	4'-6"	6'-6"	5'-2"	4'-7"	7'-11"	6'-11"	6'-2"	5'-7"	5'-2"	8'-1"	7'-0"	6'-3"	5'-9"	5'-3"
145.0	5'-2"	4'-5"	6'-5"	5'-1"	4'-6"	7'-10"	6'-9"	6'-1"	5'-6"	5'-1"	7'-11"	6'-10"	6'-2"	5'-7"	5'-2"
150.0	5'-1"	4'-4"	6'-4"	5'-0"	4'-6"	7'-8"	6'-8"	5'-11"	5'-5"	5'-0"	7'-10"	6'-9"	6'-1"	5'-6"	5'-1"
155.0	5'-0"	4'-3"	6'-2"	4'-11"	4'-5"	7'-7"	6'-6"	5'-10"	5'-4"	4'-11"	7'-8"	6'-8"	5'-11"	5'-5"	5'-0"
160.0	4'-11"	4'-2"	6'-1"	4'-10"	4'-4"	7'-5"	6'-5"	5'-9"	5'-3"	4'-10"	7'-7"	6'-6"	5'-10"	5'-4"	4'-11"
165.0	4'-10"	4'-1"	6'-0"	4'-9"	4'-3"	7'-4"	6'-4"	5'-8"	5'-2"	4'-10"	7'-5"	6'-5"	5'-9"	5'-3"	4'-10"
170.0	4'-10"	4'-1"	5'-11"	4'-8"	4'-2"	7'-3"	6'-3"	5'-7"	5'-1"	4'-9"	7'-4"	6'-4"	5'-8"	5'-2"	4'-10"
175.0	4'-9"	4'-0"	5'-10"	4'-7"	4'-2"	7'-1"	6'-2"	5'-6"	5'-0"	4'-8"	7'-3"	6'-3"	5'-7"	5'-1"	4'-9"
180.0	4'-8"	3'-11"	5'-9"	4'-7"	4'-1"	7'-0"	6'-1"	5'-5"	4'-11"	4'-7"	7'-1"	6'-2"	5'-6"	5'-0"	4'-8"
185.0	4'-7"	3'-11"	5'-8"	4'-6"	4'-0"	6'-11"	6'-0"	5'-4"	4'-11"	4'-6"	7-'0"	6'-1"	5'-5"	5'-0"	4'-7"
190.0	4'-6"	3'-10"	5'-7"	4'-5"	4'-0"	6'-10"	5'-11"	5'-3"	4'-10"	4'-6"	6'-11"	6'-0"	5'-4"	4'-11"	4'-6"
195.0	4'-6"	3'-9"	5'-6"	4'-4"	3'-11"	6'-9"	5'-10"	5'-3"	4'-9"	4'-5"	6'-10"	5'-11"	5'-4"	4'-10"	4'-6"

FLORIDA BUILDING CODE. (High Velocity Hurricane Zone)

PRODUCT REVISED
as complying with the Florida Building Code
Acceptance No 09-0730.02
Expiration Date 09/09/2014
By Helen A. Miller
Miami Dade Product Control Division MIAMI-DADE COUNTY

07/14/09
P.E. SEAL/SIGNATURE/DATE

©2009 TILTECO INC.

TILTECO INC.
TILLIT TESTING & ENGINEERING COMPANY
6355 N.W. 36th. St., Ste. 305 - VIRGINIA GARDENS, FL. 33166
Phone : (305) 871-1530 , Fax : (305) 871-1531
e-mail: tilteco@aol.com
EB-0008719
WALTER A. TILLIT Jr., P.E.
FLORIDA Lic. # 44167

ASSA/60mm. BERTHA ROLL-UP

WILLARD SHUTTER COMPANY, INC.
(ASSA # 180)
4420 N.W. 35th COURT
MIAMI, FL. 33142
Phone: (305) 633-0162, Fax: (305) 638-8634

REV N°	DESCRIPTION	DATE	REV N°	DESCRIPTION	DATE
1	OLD 05-267	07/14/09	3		
2			4		

L.G.
DRAWN BY

07/14/09
DATE

09-136
DRAWING N°

SHEET 13 OF 14

MULLION LOADING CHART MAXIMUM DESIGN PRESSURE RATING "W" (psf) AND CORRESPONDING MAXIMUM SPAN "L"(Ft) FOR A GIVEN TYPE OF MULLION AND MULLION SPACING (Ft.).

(USE MAXIMUM VALUES BETWEEN POSITIVE AND NEGATIVE LOAD)

MAXIMUM DESIGN LOAD "W" (p.s.f.)	TYPE 1 MULLION (N) 3" x 4" x 1/8"				TYPE 2 MULLION (O) 4" x 4" x 1/4"				TYPE 3 MULLION (P) 4" x 6" x 1/4"					
	MULLION SPACING				MULLION SPACING				MULLION SPACING					
	⩽ 4'-0"	4' TO 5'	5' TO 6'	6' TO 8'	⩽ 4'-0"	4' TO 5'	5' TO 6'	6' TO 8'	⩽ 4'-0"	4' TO 5'	5' TO 6'	6' TO 8'	8' TO 10'	10' TO 12'
40.0 OR LESS	9'-0"	8'-4"	7'-10"	8'-2"	11'-9"	10'-11"	10'-3"	10'-9"	16'-4"	15'-2"	14'-3"	14'-10"	13'-10"	13'-0"
45.0	8'-8"	8'-0"	7'-7"	7'-10"	11'-4"	10'-6"	9'-11"	10'-4"	15'-8"	14'-7"	13'-8"	14'-4"	13'-3"	12'-6"
50.0	8'-4"	7'-9"	7'-3"	7'-7"	10'-11"	10'-2"	9'-7"	10'-0"	15'-2"	14'-1"	13'-3"	13'-10"	12'-10"	12'-1"
55.0	8'-1"	7'-6"	7'-1"	7'-4"	10'-7"	9'-10"	9'-3"	9'-8"	14'-8"	13'-7"	12'-10"	13'-4"	12'-5"	11'-8"
60.0	7'-10"	7'-3"	6'-10"	7'-2"	10'-3"	9'-7"	9'-0"	9'-5"	14'-3"	13'-3"	12'-5"	13'-0"	12'-1"	11'-4"
65.0	7'-8"	7'-1"	6'-8"	7'-0"	10'-0"	9'-4"	8'-9"	9'-2"	13'-11"	12'-11"	12'-2"	12'-8"	11'-9"	11'-1"
70.0	7'-5"	6'-11"	6'-6"	6'-10"	9'-9"	9'-1"	8'-6"	8'-11"	13'-7"	12'-7"	11'-10"	12'-4"	11'-5"	10'-9"
75.0	7'-3"	6'-9"	6'-4"	6'-8"	9'-7"	8'-10"	8'-4"	8'-8"	13'-3"	12'-3"	11'-7"	12'-1"	11'-2"	10'-6"
80.0	7'-2"	6'-7"	6'-3"	6'-6"	9'-4"	8'-8"	8'-2"	8'-6"	12'-11"	12'-0"	11'-4"	11'-10"	10'-11"	10'-4"
85.0	7'-0"	6'-6"	6'-1"	6'-4"	9'-2"	8'-6"	8'-0"	8'-4"	12'-8"	11'-9"	11'-1"	11'-7"	10'-9"	10'-1"
90.0	6'-10"	6'-4"	6'-0"	6'-3"	9'-0"	8'-4"	7'-10"	8'-2"	12'-5"	11'-7"	10'-11"	11'-4"	10'-6"	9'-11"
95.0	6'-9"	6'-3"	5'-10"	6'-2"	8'-10"	8'-2"	7'-9"	8'-1"	12'-3"	11'-4"	10'-8"	11'-2"	10'-4"	9'-9"
100.0	6'-7"	6'-2"	5'-9"	6'-0"	8'-8"	8'-1"	7'-7"	7'-11"	12'-0"	11'-2"	10'-6"	10'-11"	10'-2"	9'-7"
105.0	6'-6"	6'-1"	5'-7"	5'-11"	8'-6"	7'-11"	7'-6"	7'-9"	11'-10"	11'-0"	10'-4"	10'-9"	—	—
110.0	6'-5"	5'-11"	5'-5"	5'-10"	8'-5"	7'-10"	7'-4"	7'-8"	11'-8"	10'-10"	10'-2"	10'-7"	—	—
115.0	6'-4"	5'-10"	5'-4"	5'-8"	8'-3"	7'-8"	7'-3"	7'-7"	11'-6"	10'-8"	10'-0"	10'-5"	—	—
120.0	6'-3"	5'-9"	5'-3"	5'-7"	8'-2"	7'-7"	7'-2"	7'-5"	11'-4"	10'-6"	9'-11"	10'-4"	—	—
125.0	6'-2"	5'-7"	5'-1"	5'-5"	8'-1"	7'-6"	7'-0"	7'-4"	11'-2"	10'-4"	9'-9"	10'-2"	—	—
130.0	6'-1"	5'-6"	5'-0"	5'-4"	7'-11"	7'-5"	6'-11"	7'-3"	11'-0"	10'-3"	9'-8"	10'-0"	—	—
135.0	6'-0"	5'-5"	4'-11"	5'-3"	7'-10"	7'-3"	6'-10"	7'-2"	10'-11"	10'-1"	9'-6"	9'-11"	—	—
140.0	5'-11"	5'-3"	4'-10"	5'-2"	7'-9"	7'-2"	6'-9"	7'-1"	10'-9"	10'-0"	9'-5"	9'-10"	—	—
145.0	5'-10"	5'-2"	4'-9"	5'-1"	7'-8"	7'-1"	6'-8"	7'-0"	10'-7"	9'-10"	9'-3"	9'-8"	—	—
150.0	5'-9"	5'-1"	4'-8"	5'-0"	7'-7"	7'-0"	6'-7"	6'-11"	10'-6"	9'-9"	9'-2"	9'-7"	—	—
155.0	5'-7"	5'-0"	4'-7"	4'-11"	7'-6"	7'-0"	6'-7"	6'-10"	10'-5"	9'-8"	9'-1"	9'-6"	—	—
160.0	5'-6"	4'-11"	4'-6"	4'-10"	7'-5"	6'-11"	6'-6"	6'-9"	10'-3"	9'-7"	9'-0"	9'-4"	—	—
165.0	5'-5"	4'-10"	4'-5"	4'-9"	7'-4"	6'-10"	6'-5"	6'-8"	10'-2"	9'-5"	8'-10"	9'-3"	—	—
170.0	5'-4"	4'-10"	4'-5"	4'-8"	7'-3"	6'-9"	6'-4"	6'-8"	10'-1"	9'-4"	8'-9"	9'-2"	—	—
175.0	5'-3"	4'-9"	4'-4"	4'-7"	7'-2"	6'-8"	6'-4"	6'-7"	10'-0"	9'-3"	8'-7"	9'-1"	—	—
180.0	5'-3"	4'-8"	4'-3"	4'-6"	7'-2"	6'-7"	6'-3"	6'-6"	9'-11"	9'-2"	8'-6"	9'-0"	—	—
185.0	5'-2"	4'-7"	4'-2"	4'-6"	7'-1"	6'-7"	6'-2"	6'-5"	9'-10"	9'-1"	8'-4"	8'-11"	—	—
190.0	5'-1"	4'-6"	4'-2"	4'-5"	7'-0"	6'-6"	6'-1"	6'-5"	9'-9"	9'-0"	8'-3"	8'-9"	—	—
195.0	5'-0"	4'-6"	4'-1"	4'-4"	6'-11"	6'-5"	6'-1"	6'-4"	9'-8"	8'-11"	8'-2"	8'-8"	—	—

NOTES : REFER TO ELEVATIONS ON SHEET 1A OF 14

1-. FOR MULLIONS INSTALLED W/O STORM BARS

A) MULLION SPACING SHALL BE SUCH THAT MAXIMUM SLAT SPAN SHALL NOT BE EXCEEDED

2-. FOR MULLIONS INSTALLED W/ STORM BARS & HEADERS

A) MULLION SPACING SHALL BE SUCH THAT MAXIMUM HEADER SPAN SHALL NOT BE EXCEEDED

B) STORM BAR SPACING SHALL BE SUCH THAT MAXIMUM SLAT SPAN SHALL NOT BE EXCEEDED

FLORIDA BUILDING CODE. (High Velocity Hurricane Zone)

PRODUCT REVISED
as complying with the Florida
Building Code
Acceptance No 09-0730.02
Expiration Date 09/09/2014
By Helena A. Molina
Miami Dade Product Control
Division
MIAMI-DADE COUNTY

P.E. SEAL/SIGNATURE/DATE

©2009 TILTECO INC.

TILTECO INC.
TILLIT TESTING & ENGINEERING COMPANY
6355 N.W. 36th. St., Ste. 305 – VIRGINIA GARDENS, FL. 33166
Phone : (305) 871-1530 , Fax : (305) 871-1531
e-mail: tilteco@aol.com
EB-0008719
WALTER A. TILLIT Jr., P.E.
FLORIDA Lic. # 44167

ASSA/60mm. BERTHA ROLL-UP

WILLARD SHUTTER COMPANY, INC.
(ASSA # 180)
4420 N.W. 35th COURT
MIAMI, FL. 33142
Phone: (305) 633-0162, Fax: (305) 638-8634

REV N°	DESCRIPTION	DATE	REV N°	DESCRIPTION	DATE
1	OLD 05-267	07/14/09	3		
2			4		

L.G.
DRAWN BY

07/14/09
DATE

09-136
DRAWING N°

SHEET 14 OF 14