MIAMI-DADE COUNTY
BUILDING CODE COMPLIANCE OFFICE (BCCO)
PRODUCT CONTROL DIVISION

MIAMI-DADE COUNTY, FLORIDA
METRO-DADE FLAGLER BUILDING

140 WEST FLAGLER STREET, SUITE 1603
MIAMI, FLORIDA 33130-1563
(305) 375-2901 FAX (305) 375-2908
www.miamidade.gov

NOTICE OF ACCEPTANCE (NOA)

JHA Associates, LTD
540 NE 142nd Street
Miami, Florida 33161

SCOPE:

This NOA is being issued under the applicable rules and regulations governing the use of construction materials. The documentation submitted has been reviewed by Miami-Dade County Product Control Division and accepted by the Board of Rules and Appeals (BORA) to be used in Miami Dade County and other areas where allowed by the Authority Having Jurisdiction (AHJ).

This NOA shall not be valid after the expiration date stated below. The Miami-Dade County Product Control Division (In Miami Dade County) and/or the AHJ (in areas other than Miami Dade County) reserve the right to have this product or material tested for quality assurance purposes. If this product or material fails to perform in the accepted manner, the manufacturer will incur the expense of such testing and the AHJ may immediately revoke, modify, or suspend the use of such product or material within their jurisdiction. BORA reserves the right to revoke this acceptance, if it is determined by Miami-Dade County Product Control Division that this product or material fails to meet the requirements of the applicable building code.

This product is approved as described herein, and has been designed to comply with the High Velocity Hurricane Zone of the Florida Building Code.

DESCRIPTION: " RS-1 High Velocity " Aluminum Accordion Shutter System

APPROVAL DOCUMENT: Drawing No. 09-017RS1, titled " RS-1 High Velocity Shutter System ", sheets 1 through 9 of 9, & 2A of 9, prepared by V. M. Engineering, dated May 31, 2009, signed and sealed by Morgan Villanueva, P.E., on May 31, 2009, bearing the Miami-Dade County Product Control Approval stamp with the Notice of Acceptance number and the Approval date by the Miami-Dade County Product Control Division.

MISSILE IMPACT RATING: Large and Small Missile Impact

LABELING: Each unit shall bear a permanent label with the manufacturer's name or logo, Kingston 5, Jamaica and the following statement: "Miami-Dade County Product Control Approved", unless otherwise noted herein.

RENEWAL of this NOA shall be considered after a renewal application has been filed and there has been no change in the applicable building code negatively affecting the performance of this product.

TERMINATION of this NOA will occur after the expiration date or if there has been a revision or change in the materials, use, and/or manufacture of the product or process. Misuse of this NOA as an endorsement of any product, for sales, advertising or any other purposes shall automatically terminate this NOA. Failure to comply with any section of this NOA shall be cause for termination and removal of NOA.

ADVERTISEMENT: The NOA number preceded by the words Miami-Dade County, Florida, and followed by the expiration date may be displayed in advertising literature. If any portion of the NOA is displayed, then it shall be done in its entirety.

INSPECTION: A copy of this entire NOA shall be provided to the user by the manufacturer or its distributors and shall be available for inspection at the job site at the request of the Building Official.

This NOA consists of this page 1, evidence submitted page E-1 as well as approval document mentioned above. The submitted documentation was reviewed by **Helmy A. Makar, P.E., M.S.**

MIAMI-DADE COUNTY APPROVED

Helmy A. Makar
11/25/2009

NOA No. 09-0806.04
Expiration Date: 11/25/2014
Approval Date: 11/25/2009

JHA Associates, LTD

NOTICE OF ACCEPTANCE: EVIDENCE SUBMITTED

A. DRAWINGS

1. *Drawing No. 09-017RS1, titled " RS-1 High Velocity Shutter System ", sheets 1 through 9 of 9, & 2A of 9, prepared by V. M. Engineering, dated May 31, 2009, signed and sealed by Morgan Villanueva, P.E., on May 31, 2009.*

B. TESTS

1. *See Association's generic approval under 09-0830.*

C. CALCULATIONS

1. *See Association's generic approval under 09-0830.*

D. QUALITY ASSURANCE

1. *By Miami-Dade County Building Code Compliance Office.*

E. MATERIAL CERTIFICATIONS

1. *See Association's generic approval under 09-0830.*

F. STATEMENTS

1. *Release letter issued by the National Shutter Association, Inc., dated March 07, 2007, certifying this product to meet the criteria of product tested and approved, and allowing JHA Associates, LTD to use the test results approved under Miami-Dade County Approval No. 09-0830, signed by Mr. Sam Downs.*
2. *Acknowledgment letter by JHA Associates, LTD, dated March 07, 2007, signed by Mr. Harry Harper.*
3. *Letter by V. M. Engineering, dated November 05, 2009, signed and sealed by Morgan Villanueva, P.E., certifying that the drawing (No.09-017RS1) prepared for JHA Associates, LTD, is engineering wise identical to National Shutter Association, Inc. generic drawing.*

Helmy A. Makar, P.E., M.S.
Senior Product Control Examiner
NOA No. 09-0806.04
Expiration Date: 11/25/2014
Approval Date: 11/25/2009

GENERAL NOTES:

1. THIS SHUTTER ACCORDION "RS-1" HAS BEEN VERIFIED IN ACCORDANCE WITH SECTION 1609.1.2.2 OF THE FLORIDA BUILDING CODE EDITION 2007 AND AS PER TAS-201 (201-94.1), TAS 202 (202-94.1) & TAS 203 (203-94.1) OF THE TEST PROTOCOLS FOR HIGH-VELOCITY HURRICANES ZONES, AND AS PER AMERICAN TESTING LABORATORY WITH THE TEST No. 4986.
THE DESIGN WIND LOADS COMPLY WITH SECTION 1626 OF THE F.B.C. 2007 CODE. IN ORDER TO VERIFY THAT ANCHORS ON THIS PRODUCT APPROVAL DOCUMENTS, AS TESTED, SHALL BE DETERMINED AS PER SECTION 1626 OF THE ABOVE MENTIONED CODE. IN ORDER TO VERIFY THAT ANCHORS ON THIS PRODUCT APPROVAL DOCUMENTS, AS TESTED, WERE NOT OVERSTRESSED, A 33% INCREASE IN ALLOWABLE STRESS FOR WIND LOADS WAS NOT USED IN THEIR ANALYSIS, AND IN THE LABORATORY THE TEST LOAD WAS 50% MORE OF DESIGN LOAD.
THE RS-1 ALUMINUM ACCORDION HIGH VELOCITY SHUTTER SYSTEM IS ADEQUATE FOR IMPACT AND FATIGUE RESISTANCE AS SHOW IN THE TEST RESULTS FROM LABORATORY.
AND LAST BUT NOT LESS, THE RS-1 ALUMINUM ACCORDION HIGH VELOCITY SHUTTER SYSTEM MAY BE INSTALLED AT HIGH VELOCITY HURRICANE ZONES (H.V.H.Z.)

2. ALL ALUMINUM EXTRUSIONS SHALL BE ALUMINUM ASSOCIATION 6063-T6 ALLOY AND TEMPER, WITH Fy = 25.0 ksi MINIMUM (UNLESS OTHERWISE NOTED).

3. SCREWS SHALL BE:
- AISI SERIES 304 OR 316 STAINLESS STEEL, Fy=35ksi MIN.
- CARBON STEEL CORROSION RESISTANT AS PER DIN 50018, Fy=50ksi.

4. BOLTS SHALL BE:
- T4-2024 ALUMINUM ALLOY AND TEMPER, Fy= 18ksi MIN.
- ASTM A-307 GALVANIZED STEEL, Fy= 50ksi
- AISI SERIES 304 STAILESS STEEL, Fy=35ksi MIN.

5. ANCHORS TO WALL SHALL BE AS FOLLOWS:
(5.1) TO EXISTING POURED CONCRETE: (Min. f'c = 3 ksi)
- 1/4"ø TAPCON ANCHORS AND 1/4"ø MAXI-SET TAPCON, AS MANUFACTURED BY I.T.W. RAMSET/ RED HEAD.
- 1/4"ø CRETE-FLEX SS4 ANCHORS, AS MANUFACTURED BY ELCO TEXTRON.
- 1/4"ø x 7/8" CALK-IN ANCHORS AS MANUFACTURED BY ALL POWERS FASTENERS

NOTES:
5.1.1) MINIMUM EMBEDMENT INTO POURED CONCRETE OF TAPCON ANCHORS IS 1 3/4".
5.1.2) MINIMUM EMBEDMENT OF 1/4"ø CALK-IN ANCHORS SHALL BE 7/8" INTO THE POURED CONCRETE. NO EMBEDMENT INTO STUCCO SHALL BE PERMITTED. 1/4" ø-20 S.S. MACHINE SCREW USED TOGETHER WITH 1/4"ø CALK-IN ANCHORS.

5.2) IN CASE THAT PRECAST STONE, PRECAST CONCRETE PANELS, PAVERS OR ANY VENEER BE FOUND ON THE EXISTING WALL OR FLOOR, ANCHORS SHALL BE LONG ENOUGH TO REACH THE MAIN STRUCTURE BEHIND SAID WALL FINISHES. ANCHORAGE SHALL BE AS INDICATED ON NOTES 5.1.1) & 5.1.2) ABOVE.

(5.3) TO EXISTING CONCRETE BLOCK WALL:
- 1/4"ø TAPCON ANCHORS AND 1/4"ø MAXI-SET TAPCON, AS MANUFACTURED BY I.T.W. RAMSET/ RED HEAD.
- 1/4"ø CRETE-FLEX SS4 ANCHORS, AS MANUFACTURED BY ELCO TEXTRON.
- 1/4"ø x 7/8" CALK-IN ANCHORS AS MANUFACTURED BY ALL POWERS FASTENERS

NOTES:
5.4.1) MINIMUM EMBEDMENT INTO CONCRETE BLOCK OF TAPCON & WEDGE-BOLT ANCHORS, IS 1 1/4".
5.4.2) MINIMUM EMBEDMENT OF 1/4"ø CALK-IN ANCHORS SHALL BE 7/8" INTO THE POURED CONCRETE. NO EMBEDMENT INTO STUCCO SHALL BE PERMITTED. 1/4" ø-20 S.S. MACHINE SCREW USED TOGETHER WITH 1/4"ø CALK-IN ANCHORS.
5.5) IN CASE THAT PRECAST STONE, PRECAST CONCRETE PANELS, PAVERS OR ANY VENEER BE FOUND ON THE EXISTING WALL OR FLOOR, ANCHORS SHALL BE LONG ENOUGH TO REACH THE MAIN STRUCTURE BEHIND SAID WALL FINISHES. ANCHORAGE SHALL BE AS INDICATED ON NOTES 5.4.1) & 5.4.2) ABOVE.

(5.6) ANCHORS SHALL BE INSTALLED FOLLOWING ALL OF THE RECOMMENDATIONS AND SPECIFICATIONS OF THE ANCHOR'S MANUFACTURER.

(5.7) SEE SCHEDULE BELOW FOR EDGE DISTANCE (E.D.) VERSUS SPACING RELATIONSHIP FOR ANCHORS ON SHEET 7 OF 9.

6 MOUNTING SECTIONS CAN BE COMBINED IN ANY WAY TO SUIT ANY INSTALLATION. (SEE ALTERNATIVES NOTES ON SHEET 6 OF 9).
- FLOOR MOUNTING INSTALLATION SHALL BE REMOVABLE WHEN PERFORMED ADJACENT TO AN OPERABLE EXIT OR ENTRANCE

7. CONTRACTOR SHALL VERIFY THE EXISTING CONDITIONS OF THE OPENINGS WHERE SHUTTER WILL BE INSTALLED TO INSURE APPROPRIATE INSTALLATION.

CONTRACTOR SHALL BE RESPONSIBLE FOR:
-VERIFY THE EXISTING CONDITIONS OF THE STRUCTURE WHERE SHUTTER WILL BE INSTALLED TO PREVENT ANY DAMAGE TO EXISTING STRUCTURE.
-SEAL ALL SHUTTER TRACKS COMPONENTS ALL AROUND EDGES IN CONTACT WITH THE STRUCTURE TO PREVENT ANY DAMAGE DUE TO WIND AND RAIN
-SELECT THE PROPER TYPE OF INSTALLATION TO PROVIDE APPROPRIATE WORK INCLUDING LIFE SAFETY OF THIS PRODUCT.
-IF IN ANY CASE CONTRACTOR NEEDS TO MADE ANY MODIFICATION HE/SHE SHOULD COMMUNICATE IMMEDIATELY TO ENGINEER OF RECORD BEFORE ANY ACTION.

8. A LABEL SHALL BE PLACED FOR EVERY OPENING BY THE MANUFACTURER AND SHALL BE EXPOSED ON THE CENTERMATE, COMPONENT 2 OR 3.
LABEL SHALL READ:
RS-1 ALUMINUM ACCORDION.
ROLLINGSHIELD INC.
MIAMI, FLORIDA
MIAMI-DADE COUNTY PRODUCT CONTROL APPROVED.

9. THE INSTALLATION OF THIS RS-1 ALUMINUM ACCORDION HIGH VELOCITY SHUTTER SYSTEM SHALL COMPLY WITH THE SPECIFICATIONS INDICATED IN THIS DRAWING PLUS ANY BUILDING AND ZONING REGULATIONS PROVIDED BY THE JURISDICTION WHERE PERMIT IS APPLIED TO.

10. THIS PRODUCT APPROVAL DOCUMENTS WILL BE VALID ONLY WHEN IT MEETS THE FOLLOWING TERMS:
-PLANS SHALL BE SIGNED & SEALED BY THE ENGINEER OF RECORD.
-NO MODIFICATIONS AND/OR ALTERATIONS MAY BE MADE BY ANY MEANS.

11. THIS PRODUCT APPROVAL DOCUMENTS WAS NOT PREPARED FOR A SPECIFIC SITE.

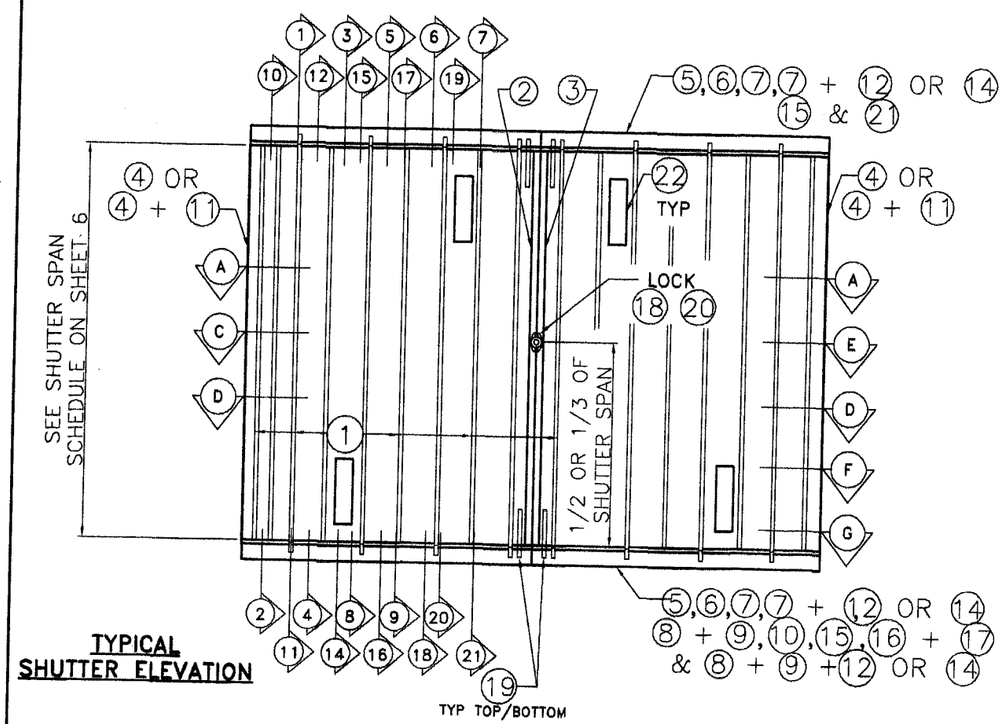

TYPICAL SHUTTER ELEVATION

RS-1 ALUMINUM SHUTTER
HIGH VELOCITY SHUTTER SYSTEM

JHA Associates, LTD
PHONE (876) 929-5648 FAX (876) 995-9181
15 Retirement Crescent
Kingston 5, Jamaica WI

REV. No	DESCRIPTION	DATE
1	-	-
2	-	-
3	-	-
4	-	-

V.M. Engineering Inc.
C. of A. No. 27633
11278 S.W. 153rd Place
MIAMI, FLORIDA 33196
TEL: 786-281-6968
TEL: 305-383-5896

MORGAN VILLANUEVA, P.E.
STRUCTURAL ENGINEER
FLORIDA LIC. NO.: 60292

Approved as complying with the Florida Building Code
Date 11/25/2009
NOA# 09-0806.04
Miami Dade Product Control Division
By

MIAMI-DADE COUNTY

SCALE:
DATE: 5-31-09

F.B.C.
(High Velocity Hurricane Zone)

DWG No: **09-017RS1**

SHEET **1 OF 9**

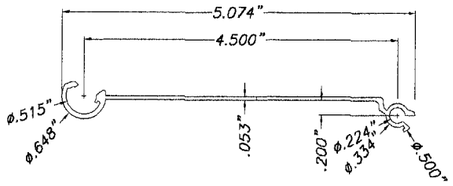

1 MALE/FEMALE BLADE

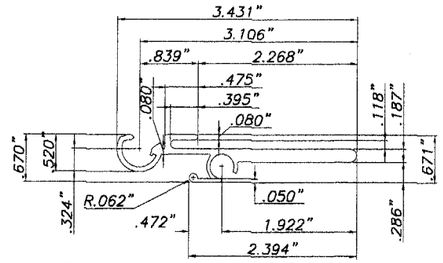

2 MALE CENTERMATE BLADE

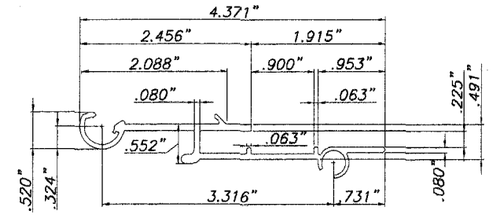

3 FEMALE CENTERMATE BLADE

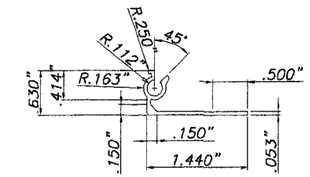

4 180° MALE STARTER

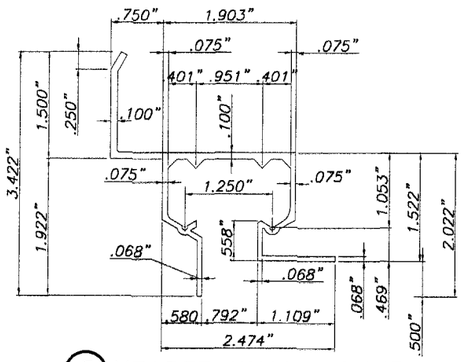

5 HEADER WALL MOUNT.

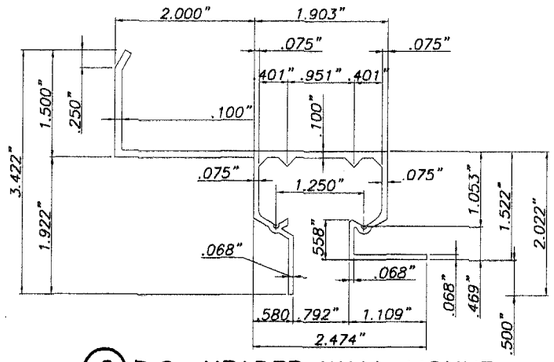

6 B.O. HEADER WALL MOUNT.

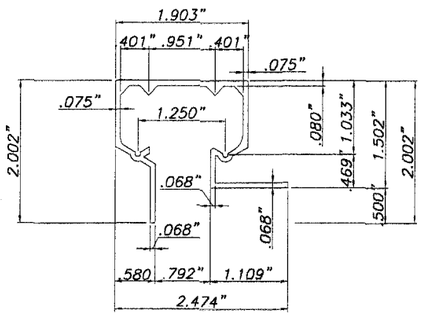

7 CEILING HEADER MOUNT.

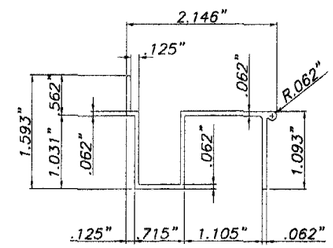

8 FLOOR SILL

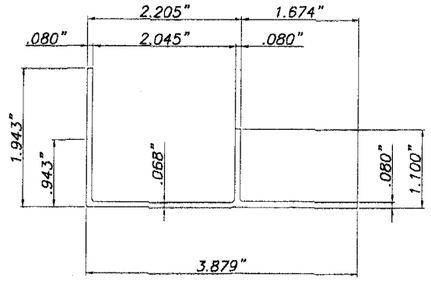

9 ADJUSTABLE FLOOR SILL ADAPTOR

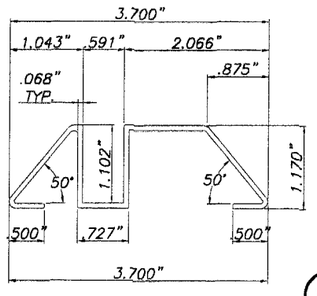

10 THRESHOLD TRACK

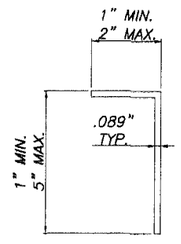

11 STARTER ANGLE

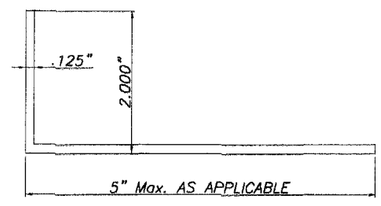

12 ALUMINUM B.O. ANGLE

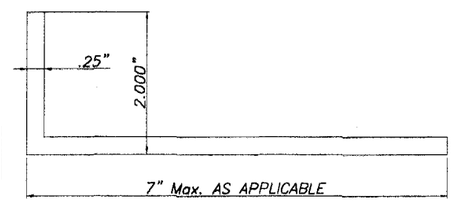

14 ALUMINUM B.O ANGLE

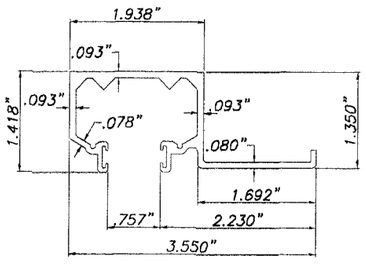

15 CEILING HEADER

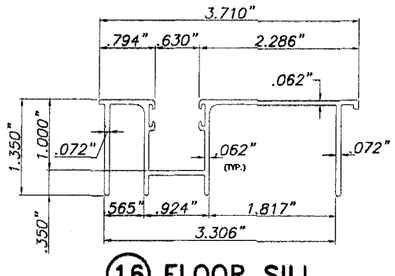

16 FLOOR SILL

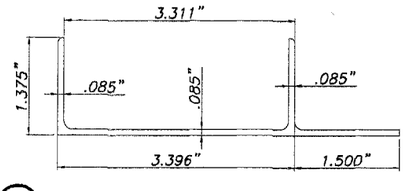

17 ADJUSTABLE FLOOR SILL ADAPTOR W / LIP

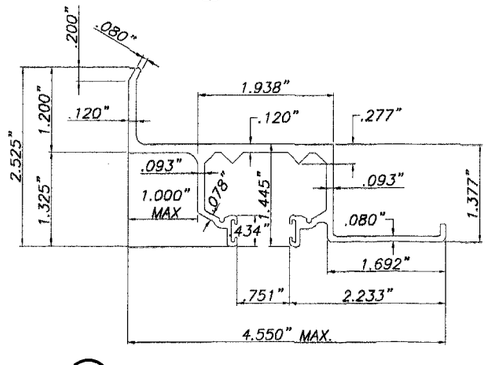

21 WALL HEADER

RS-1 ALUMINUM SHUTTER
HIGH VELOCITY SHUTTER SYSTEM

JHA Associates, LTD
PHONE (876) 929-5648 FAX (876) 995-9161
15 Retirement Crescent
Kingston 5, Jamaica WI

REV. No	DESCRIPTION	DATE
1	-	-
2	-	-
3	-	-
4	-	-

V.M. Engineering Inc.
C. of A. No. 27633
11278 S.W. 153rd Place
MIAMI, FLORIDA 33196
TEL: 786-281-6968
TEL: 305-383-5896

MORGAN VILLANUEVA, P.E.
STRUCTURAL ENGINEER
FLORIDA LIC. NO.: 60292

05/31/09

Approved as complying with the Florida Building Code
Date 11/25/2009
NOA# 09-0806.04
Miami Dade Product Control Division
By

MIAMI-DADE COUNTY

SCALE:
DATE: 5-31-09

F.B.C.
(High Velocity Hurricane Zone)

DWG No: 09-017RS1

SHEET 2 OF 9

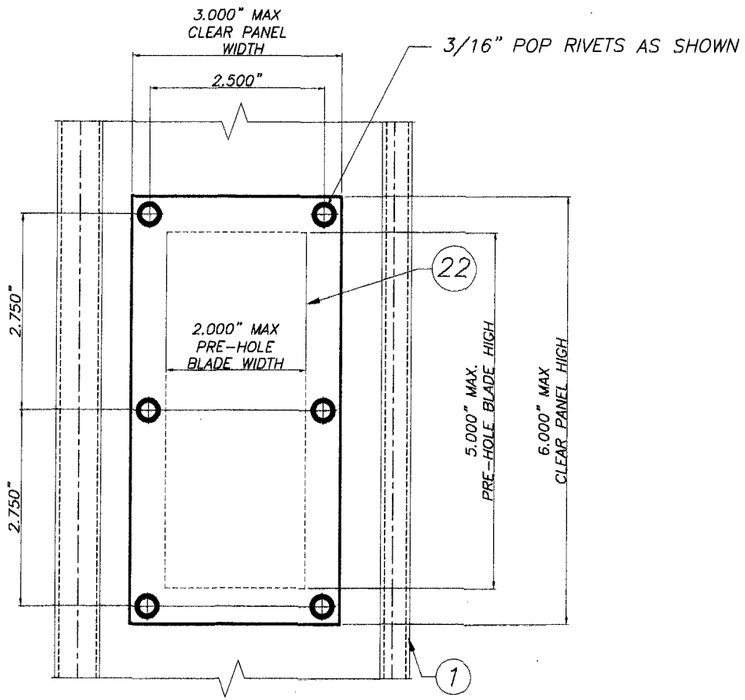

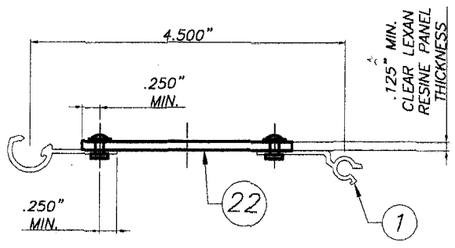

MALE/FEMALE BLADE DETAIL OF CLEAR PANEL LOCATION

MAXIMUM NUMBER OF CLEAR PANELS PER SHUTTER MUST NOT EXCEEDED FOUR (4) PER ACCORDION AND LOCATED TWO AT EACH SIDE OF THE CENTERMATES STARTED AT THIRD BLADE AFTER THE CENTERMATES AND THE SECOND ONE FOURTH BLADE AFTER, TYPICAL AT EACH SIDE OF THE SHUTTER.

☆
CLEAR PANEL SHALL BE LEXAN RESIN #103-112 (UV STABILIZED) OR EQUIVALENT COMPARABLE TO G.E. LEXAN POLYMER SHEET #90-34, APPROVED BY MIAMI-DADE COUNTY NOA #03-1210.4, THERMOPLASTIC POLYMER TENSILE STRENGTH Fy=8.9ksi, Fb=12.9ksi, E=328.7ksi

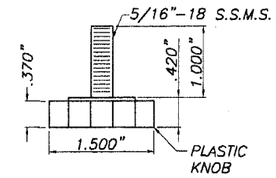

(18) PLASTIC KNOB LOCK

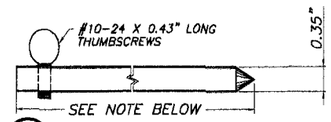

(19) LOCKING PIN

24" Min. FOR UP TO 9'-0" SHUTTER BLADE LENGTHS, AND FOR SHUTTER BLADE LENGTHS GREATER THAN 9'-0" INCREASE LOCKING PIN'S LENGTH BY 2" FOR EVERY 6" INCREASE ON SHUTTER BLADE'S LENGTH.

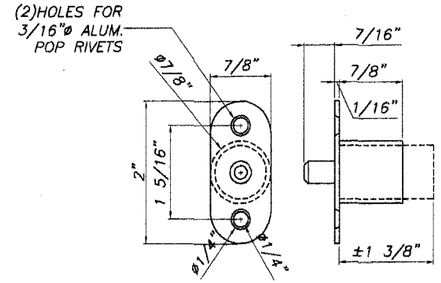

(20) NICKEL PLATED PUSH LOCK BOTTOM

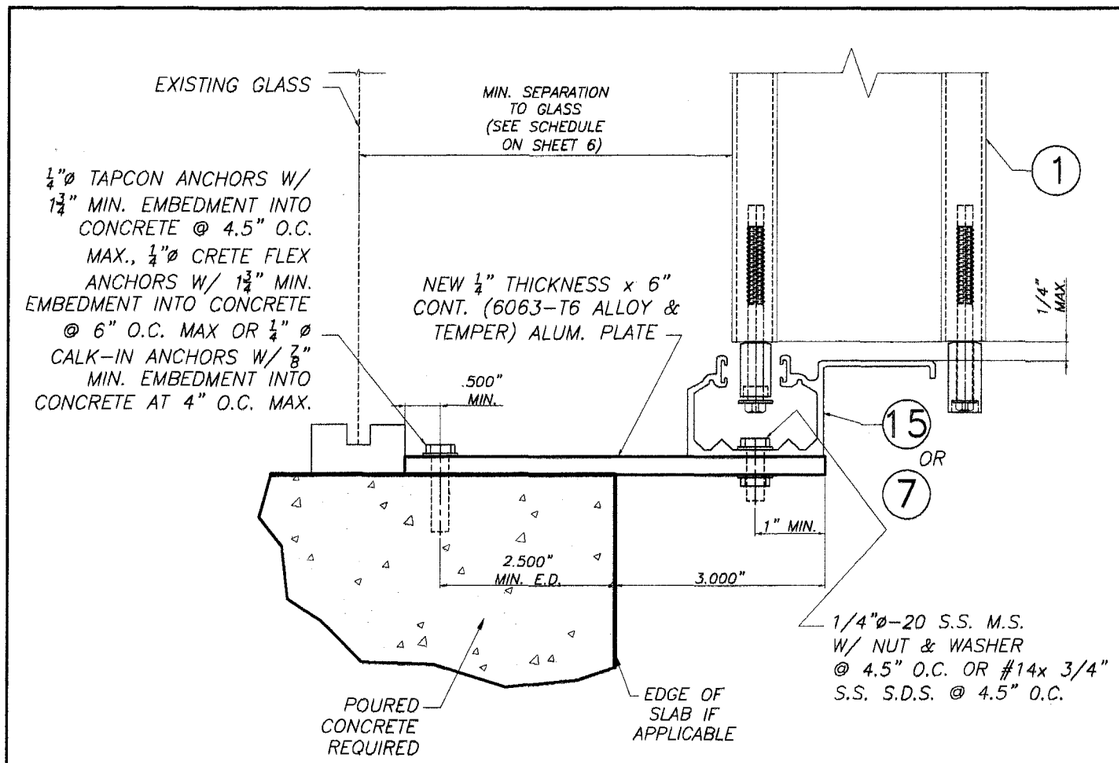

TYPICAL CONNECTION WITH ALUMINUM PLATE (ONLY FOR WINDOW SILL)

RS-1 ALUMINUM SHUTTER
HIGH VELOCITY SHUTTER SYSTEM

JHA Associates, LTD
PHONE (876) 929-5648 FAX (876) 995-9161
15 Retirement Crescent
Kingston 5, Jamaica WI

REV. No	DESCRIPTION	DATE
1	-	-
2	-	-
3	-	-
4	-	-

V.M. Engineering Inc.
C. of A. No. 27633
11278 S.W. 153rd Place
MIAMI, FLORIDA 33196
TEL: 786-281-6968
TEL: 305-383-5696

MORGAN VILLANUEVA, P.E.
STRUCTURAL ENGINEER
FLORIDA LIC. NO.: 60292

Approved as complying with the Florida Building Code
Date 11/25/2009
NOA# 09-0806.04
Miami Dade Product Control Division
By

MIAMI-DADE COUNTY

SCALE:
DATE: 5-31-09

F.B.C.
(High Velocity Hurricane Zone)

DWG No: 09-017RS1

SHEET 2A OF 9

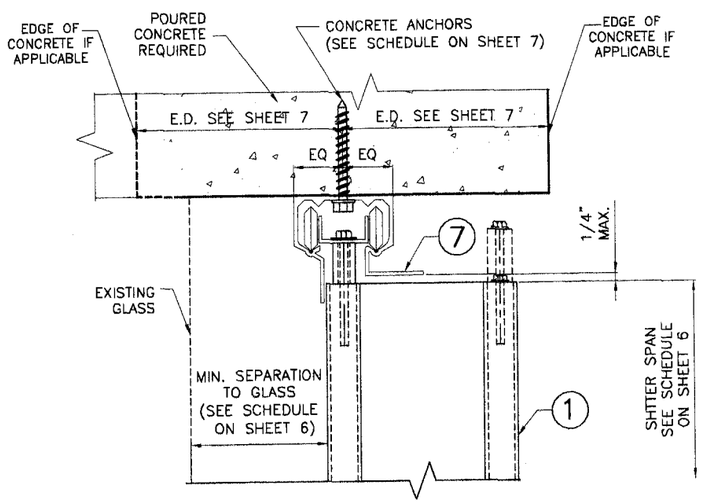

① CEILING HEADER MOUNTING INSTALLATION

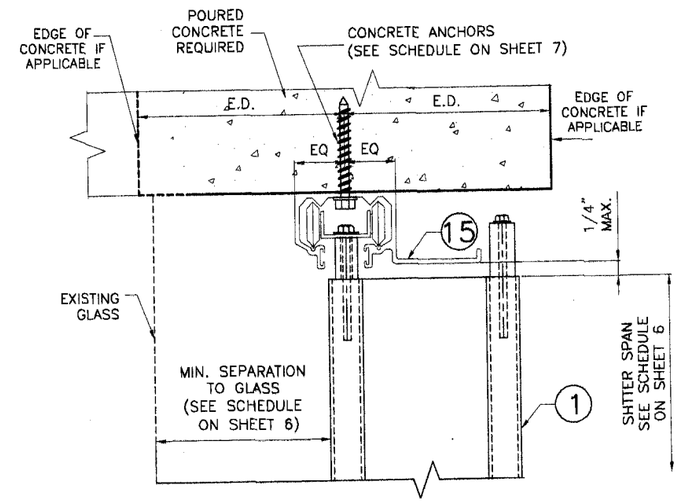

③ CEILING HEADER MOUNTING INSTALLATION

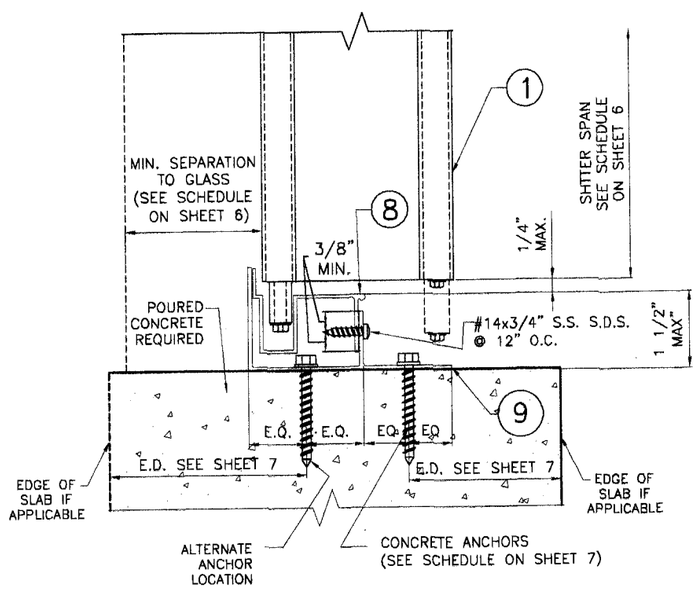

② SILL & ADJUSTABLE FLOOR MOUNTING INSTALLATION

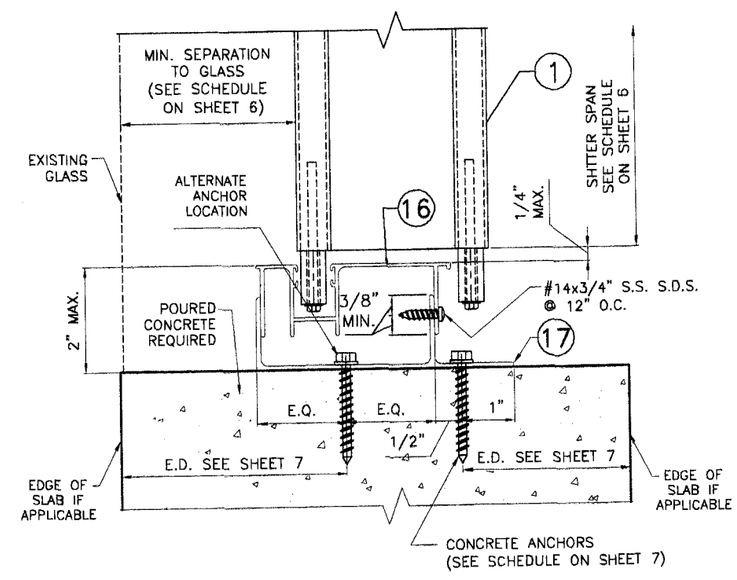

④ SILL & ADJUSTABLE FLOOR MOUNTING INSTALLATION

RS-1 ALUMINUM SHUTTER
HIGH VELOCITY SHUTTER SYSTEM

JHA Associates, LTD
PHONE (876) 929-5648 FAX (876) 995-9161
15 Retirement Crescent
Kingston 5, Jamaica WI

REV. No	DESCRIPTION	DATE
1	-	-
2	-	-
3	-	-
4	-	-

V.M. Engineering Inc.
C. of A. No. 27633
11278 S.W. 153rd Place
MIAMI, FLORIDA 33196
TEL: 786-281-6968
TEL: 305-383-5896

05/31/09

MORGAN VILLANUEVA, P.E.
STRUCTURAL ENGINEER
FLORIDA LIC. NO.: 60292

Approved as complying with the Florida Building Code
Date 11/25/2009
NOA# 09-0806.04
Miami Dade Product Control Division
By

MIAMI-DADE COUNTY

SCALE:
DATE: 5-31-09

F.B.C. 3/8" = 1'
(High Velocity Hurricane Zone)

DWG No: 09-017RS1

SHEET 3 OF 9

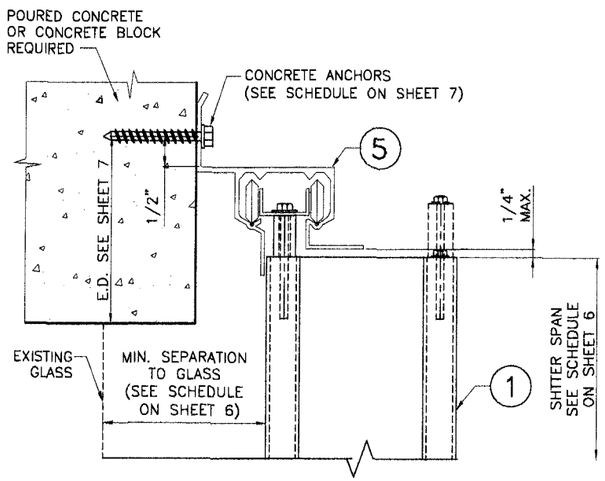

⑤ HEADER WALL MOUNTING INSTALLATION

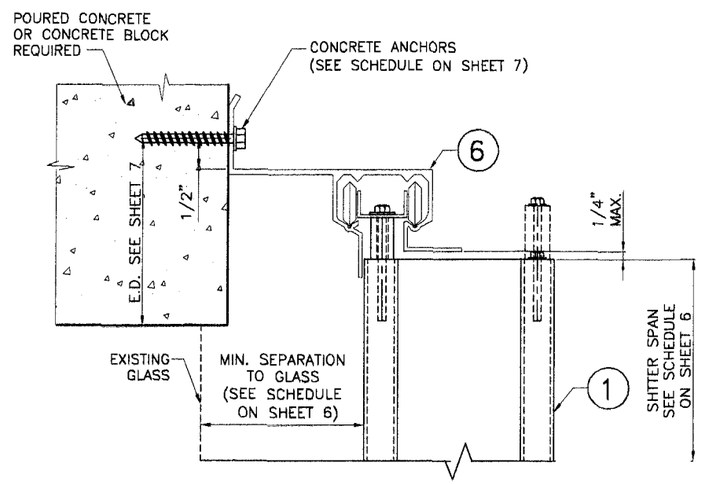

⑥ B.O. HEADER WALL MOUNTING INSTALLATION

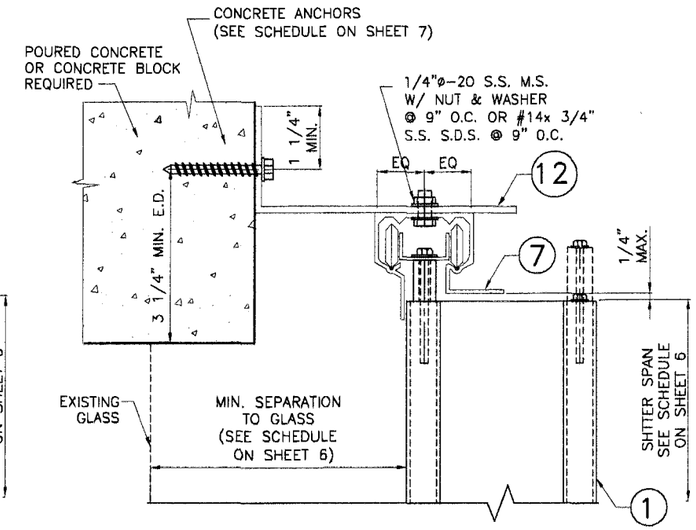

⑦ B.O. CEILING HEADER MOUNTING INSTALLATION

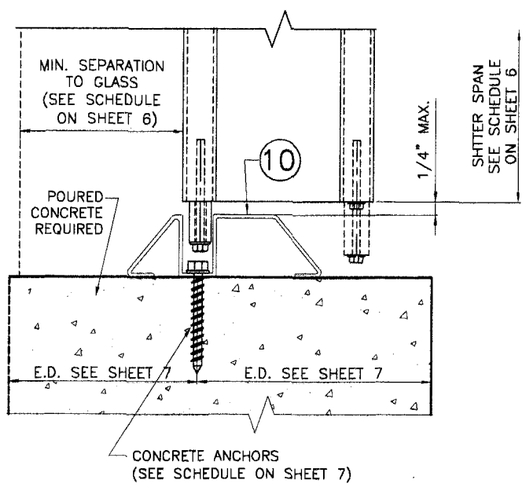

⑨ THRESHOLD FLOOR MOUNTING INSTALLATION

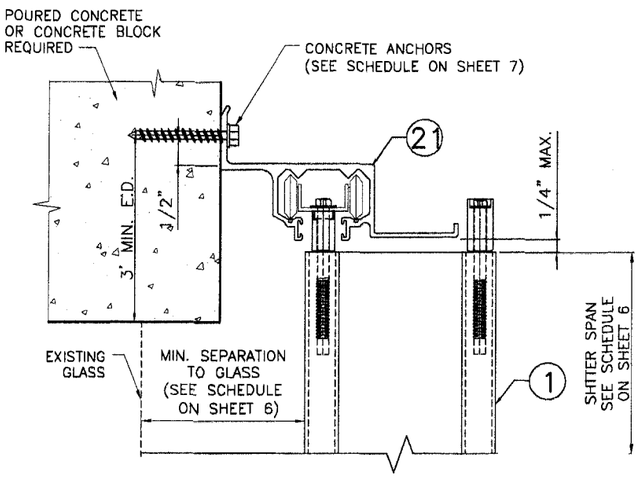

⑩ WALL MOUNTING INSTALLATION

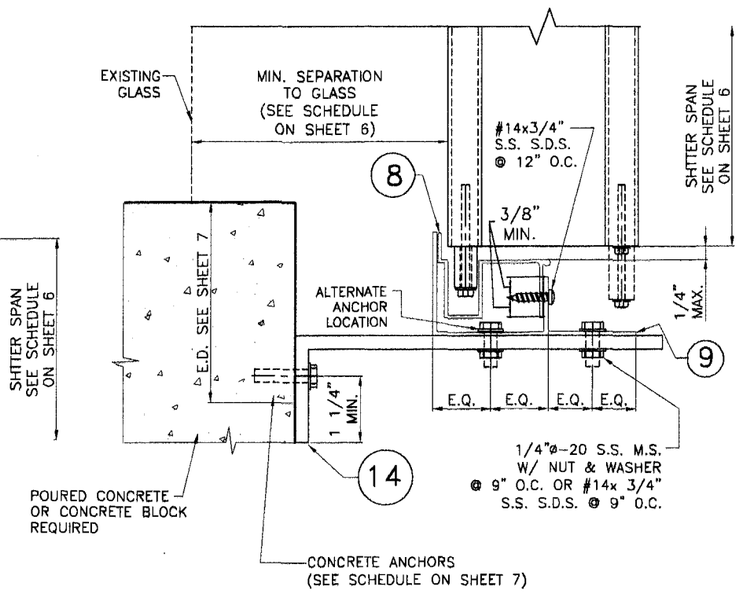

⑧ B.O. SILL & ADJUSTABLE FLOOR MOUNTING INSTALLATION

RS-1 ALUMINUM SHUTTER
HIGH VELOCITY SHUTTER SYSTEM

JHA Associates, LTD
PHONE (876) 929-5648 FAX (876) 995-9161
15 Retirement Crescent
Kingston 5, Jamaica WI

REV. No	DESCRIPTION	DATE
1	-	-
2	-	-
3	-	-
4	-	-

V.M. Engineering Inc.
C. of A. No. 27633
11278 S.W. 153rd Place
MIAMI, FLORIDA 33196
TEL: 786-281-6968
TEL: 305-383-5896

MORGAN VILLANUEVA, P.E.
STRUCTURAL ENGINEER
FLORIDA LIC. NO.: 60292

Approved as complying with the Florida Building Code
Date 11/25/2009
NOA# 09-0806.04
Miami-Dade Product Control Division
By

MIAMI-DADE COUNTY

SCALE:
DATE: 5-31-09

F.B.C.
(High Velocity Hurricane Zone)

DWG No: **09-017RS1**

SHEET **4 OF 9**

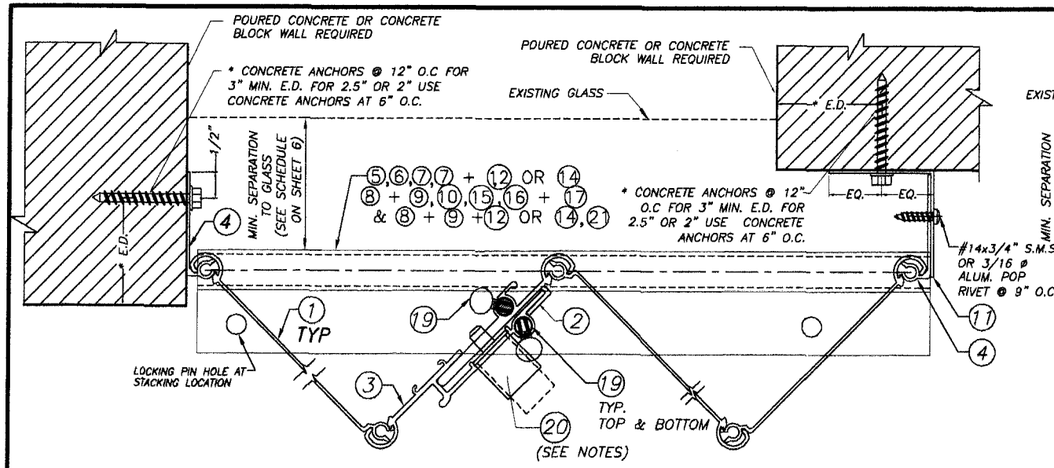

SECTION A–A

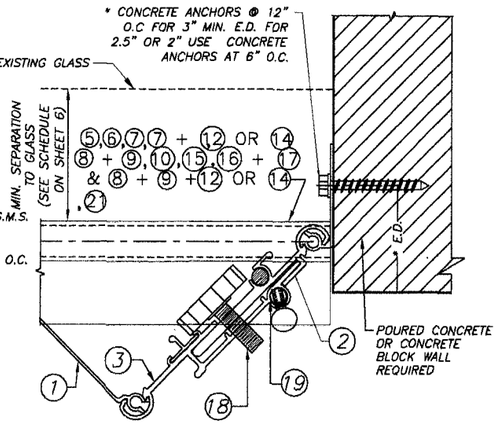

SECTION B
END CLOSURE ALTERNATE

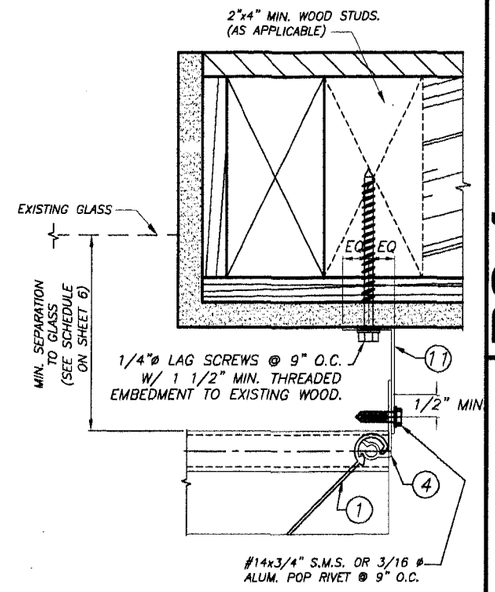

SECTION F

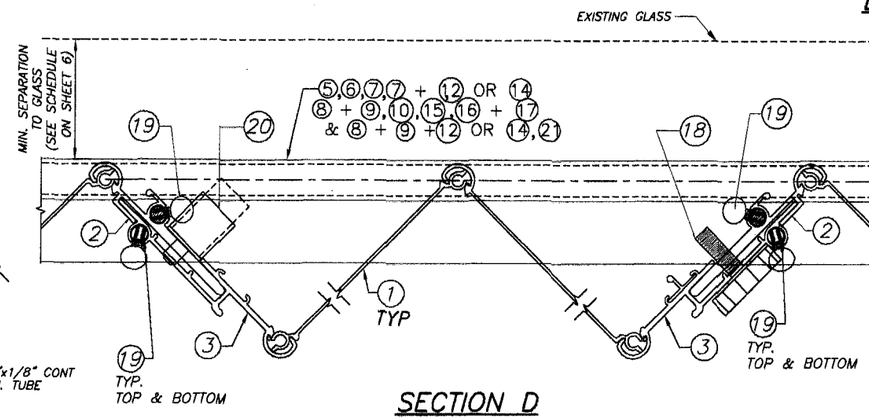

SECTION D

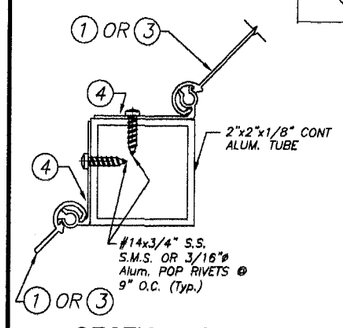

SECTION C

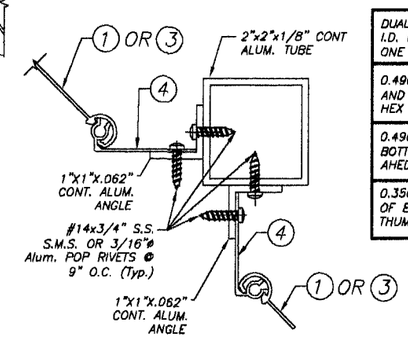

SECTION E

DUAL NYLON WHEELS WITH 0.490" BY 1.100" LONG NYLON GUIDE, WITH NO I.D. MARKS, AT TOP OF INTERIOR SLATS SPACED EQUALLY, FASTENED WITH ONE NO. 14 BY 3" HEX HEAD PIN SCREWS.	
0.490" DIAMETER BY 0.590" NYLON GUIDE, WITH NO I.D. MARKS, AT TOP AND BOTTOM OF EACH EXTERIOR SLAT, FASTENED WITH ONE NO. 14 BY 3" HEX HEAD PIN SCREWS.	
0.490" DIAMETER BY 0.820" NYLON GUIDE, WITH NO MARKS, AT TOP AND BOTTOM OF EACH INTERIOR SLAT, FASTENED WITH ONE NO. 14 BY 3" HEX AHED PIN SCREWS.	
0.350" DIAMETER BY 24" LONG ALUMINUM LOCK PIN, AT TOP AND BOTTOM OF EACH LOCKING SLAT, FASTENED WITH ONE 10-24 BY 0.430" LONG THUMB TURN SCREWS.	

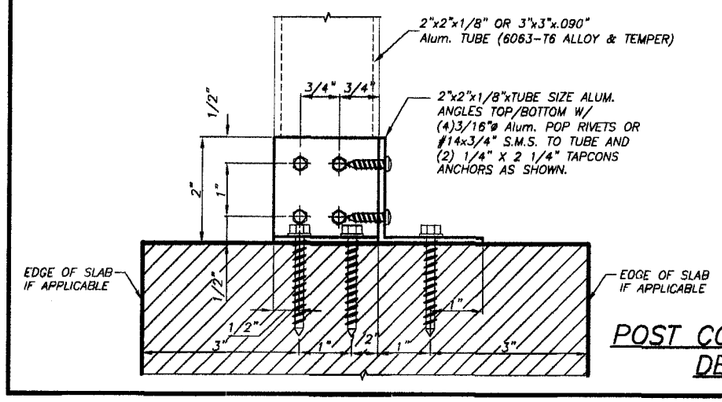

POST CONNECTION DETAIL

NOTES FOR LOCKING OF 2 & 3

PUSH BOTTOM LOCK 20 MAY BE USED FOR INSTALLATIONS SECURED FROM THE OUTSIDE OR INSIDE OF SHUTTER.
WHEN INSTALLING 20 FROM THE OUTSIDE, A 7/8"ø HOLE SHALL BE DRILLED AT 3 AND 20 MUST BE RIVETED FROM THE BACK OF 3 TO THE FRONT W/ (2)3/16"ø ALUM. POP RIVETS. A 3/8"ø HOLE MUST THEN BE DRILLED AT 2 TO ALLOW FOR 20 PIN TO PASS THRU.
WHEN INSTALLING 20 FROM THE INSIDE, 20 MUST BE RIVETED TO 2 W/(2)3/16"ø ALUM. POP RIVETS. A 3/8"ø HOLE MUST THEN BE DRILLED THRU 3 AND 2 TO ALLOW FOR 20 PIN TO PASS THRU.

5/16"x1" LOCK 18 MAY BE USED ALTERNATIVELLY TO 20 LOCK FOR INSTALLATIONS SECURED FROM THE OUTSIDE OR INSIDE OF SHUTTER. IN THIS CASE, A 5/16"ø HOLE SHALL BE DRILLED THRU 2 AND 3. HOLE DRILLED TO 2 SHALL BE TAPPED TO ACCEPT 18 THREADS PER INCH MACHINE SCREW.

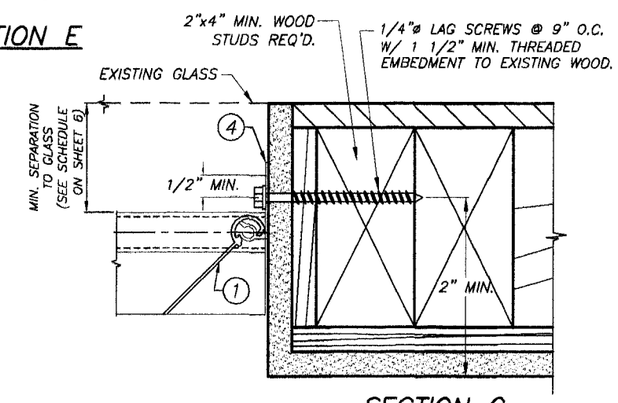

SECTION G

RS-1 ALUMINUM SHUTTER
HIGH VELOCITY SHUTTER SYSTEM

JHA Associates, LTD
PHONE (876) 929-5648 FAX (876) 995-9161
15 Retirement Crescent
Kingston 5, Jamaica WI

REV. No	DESCRIPTION	DATE
1	-	-
2	-	-
3	-	-
4	-	-

V.M. Engineering Inc.
C. of A. No. 27633
11278 S.W. 153rd Place
MIAMI, FLORIDA 33196
TEL: 786-281-6968
TEL: 305-383-5896

MORGAN VILLANUEVA, P.E.
STRUCTURAL ENGINEER
FLORIDA LIC. NO.: 60292

Approved as complying with the Florida Building Code
Date 11/25/2009
NOA# 09-0806.04
Miami Dade Product Control Division
By

MIAMI–DADE COUNTY

SCALE:
DATE: 5-31-09

F.B.C.
(High Velocity Hurricane Zone)

DWG No: 09-017RS1

SHEET 5 OF 9

MAXIMUM DESIGN PRESSURE RATING "W" (p.s.f.) AND CORRESPONDING MAXIMUM SPAN "L" SCHEDULE.

MAXIMUM WIND LOAD DESIGN "W" (p.s.f.)	MAXIMUM ALLOWABLE DESIGN SPANS								MINIMUM SEPARATION TO GLASS (in.)	
	SECTIONS 5 TO 8 WALL MOUNTING INSTALLATIONS		SECTIONS 1, 2 & 9 FLOOR/CEILING MOUNTING INSTALLATIONS		SECTIONS 3 & 4 FLOOR/CEILING MOUNTING INSTALLATIONS		SECTION 10 WALL MOUNTING INSTALLATION		WHEN SHUTTERS INSTALLED WITHIN THE FIRST 30'-0" ELEVATION OF BUILDING MEASURED AT BOTTOM OF SHUTTER.	WHEN SHUTTERS INSTALLED ABOVE 30'-0" ELEVATION OF BUILDING, MEASURED AT BOTTOM OF SHUTTER.
	L+	L-	L+	L-	L+	L-	L+	L-		
30	12'-4"	12'-4"	12'-4"	12'-4"	12'-4"	12'-4"	12'-4"	12'-4"	3"	2 3/4"
35	12'-4"	12'-4"	12'-4"	12'-4"	12'-4"	12'-4"	12'-4"	12'-4"	3"	2 3/4"
40	12'-4"	12'-4"	12'-4"	12'-4"	12'-4"	12'-4"	12'-4"	12'-4"	3"	2 3/4"
45	11'-10"	11'-10"	11'-10"	11'-10"	12'-4"	12'-4"	12'-1"	12'-3"	3"	2 3/4"
50	11'-3"	11'-3"	11'-5"	11'-5"	12'-4"	12'-4"	11'-11"	12'-1"	3"	2 3/4"
55	10'-8"	10'-8"	11'-0"	11'-0"	12'-4"	12'-4"	11'-8"	12'-0"	3"	2 3/4"
60	10'-3"	10'-3"	10'-7"	10'-7"	12'-0"	12'-4"	11'-6"	11'-10"	3"	2 3/4"
65	9'-10"	9'-10"	10'-2"	10'-2"	11'-6"	12'-4"	11'-3"	11'-9"	3"	2 3/4"
70	9'-6"	9'-6"	9'-9"	9'-9"	11'-1"	12'-4"	11'-1"	11'-6"	3"	2 3/4"
75	9'-2"	9'-2"	9'-4"	9'-4"	10'-9"	12'-4"	10'-10"	11'-4"	3"	2 3/4"
80	8'-10"	8'-10"	9'-4"	9'-4"	10'-5"	12'-4"	10'-8"	11'-2"	3"	2 3/4"
85	8'-7"	8'-7"	9'-0"	9'-4"	10'-1"	12'-4"	10'-5"	11'-0"	3"	2 3/4"
90	8'-4"	8'-4"	8'-9"	9'-3"	9'-10"	12'-4"	10'-3"	10'-10"	3"	2 3/4"
95	7'-8"	8'-2"	8'-6"	9'-3"	9'-6"	12'-4"	10'-0"	10'-8"	2 3/4"	2 3/4"
100	6'-10"	7'-11"	8'-4"	9'-1"	9'-4"	12'-4"	9'-10"	10'-6"	2 3/4"	2 3/4"
105	6'-3"	7'-9"	8'-1"	8'-10"	8'-10"	12'-2"	9'-7"	10'-5"	2 3/4"	2 3/4"
110	5'-6"	7'-7"	7'-9"	8'-8"	8'-6"	11'-11"	9'-5"	10'-3"	2 3/4"	2 3/4"
115	4'-10"	7'-5"	7'-3"	8'-6"	8'-0"	11'-8"	9'-2"	10'-2"	2 3/4"	2 3/4"
120	4'-2"	7'-3"	7'-2"	8'-3"	7'-7"	11'-5"	9'-0"	10'-1"	2 3/4"	2 3/4"
125	3'-6"	7'-1"	7'-0"	8'-1"	7'-3"	11'-2"	-	10'-0"	2 3/4"	2 3/4"
130	-	6'-11"	-	7'-11"	7'-0"	10'-11"	-	9'-10"	2 3/4"	2 3/4"
135	-	6'-10"	-	7'-10"	6'-9"	10'-9"	-	9'-9"	2 3/4"	2 3/4"
140	-	6'-8"	-	7'-8"	6'-6"	10'-7"	-	9'-8"	2 3/4"	2 3/4"
145	-	6'-7"	-	7'-6"	6'-3"	10'-4"	-	9'-7"	2 3/4"	2 3/4"
150	-	6'-6"	-	7'-1"	6'-0"	10'-2"	-	9'-6"	2 3/4"	2 3/4"
155	-	6'-4"	-	6'-9"	5'-10"	10'-0"	-	9'-5"	2 3/4"	2 3/4"
160	-	6'-3"	-	6'-5"	5'-8"	9'-10"	-	9'-4"	2 3/4"	2 3/4"
165	-	6'-2"	-	6'-0"	5'-6"	9'-9"	-	9'-4"	2 1/2"	2 3/4"
170	-	5'-11"	-	5'-8"	5'-4"	9'-7"	-	9'-3"	2 1/2"	2 3/4"
175	-	5'-6"	-	5'-4"	5'-2"	9'-5"	-	9'-1"	2 1/2"	2 3/4"
180	-	5'-2"	-	4'-11"	5'-0"	9'-4"	-	9'-0"	2 1/2"	2 3/4"
185	-	4'-10"	-	4'-7"	4'-10"	9'-0"	-	8'-11"	2 1/2"	2 3/4"
190	-	4'-5"	-	4'-2"	4'-9"	8'-10"	-	8'-9"	2 1/2"	2 3/4"
195	-	4'-1"	-	3'-10"	4'-8"	8'-6"	-	8'-6"	2 1/2"	2 3/4"
200	-	3'-6"	-	3'-6"	4'-7"	8'-0"	-	8'-0"	2 1/2"	2 3/4"

NOTES:

(1) L+: ALLOWABLE SPAN DUE TO POSITIVE DESIGN LOAD +W (psf)
L-: ALLOWABLE SPAN DUE TO NEGATIVE DESIGN LOAD -W (psf)

(2) TO DETERMINE MAXIMUM ALLOWABLE SPAN:
GIVEN: POSITIVE LOAD (W+) AND NEGATIVE LOAD (W-)

- IDENTIFY TYPE OF INSTALLATION (WALL MOUNTING, FLOOR MOUNTING, ...ETC.).

- DETERMINE VALUE OF L+ AND L- FROM TABLE

FINAL MAXIMUM ALLOWABLE SPAN SHALL BE EQUAL TO THE "MINIMUM" OF VALUES OF L+ AND L-

(3) AFTER THE MAXIMUM ALLOWABLE SPAN CHECK SCHEDULE TABLE TO OBTAIN MAXIMUM ANCHOR SPACING.

REMEMBER TO SELECT ANCHOR SPACING USING NEGATIVE DESIGN LOAD (W psf)

DUAL NYLON WHEELS WITH 0.490" BY 1.100" LONG NYLON GUIDE, WITH NO I.D. MARKS, AT TOP OF INTERIOR SLATS SPACED EQUALLY, FASTENED WITH ONE NO. 14 BY 3" HEX HEAD PIN SCREWS.

0.490" DIAMETER BY 0.590" NYLON GUIDE, WITH NO I.D. MARKS, AT TOP AND BOTTOM OF EACH EXTERIOR SLAT, FASTENED WITH ONE NO. 14 BY 3" HEX HEAD PIN SCREWS.

0.490" DIAMETER BY 0.820" NYLON GUIDE, WITH NO MARKS, AT TOP AND BOTTOM OF EACH INTERIOR SLAT, FASTENED WITH ONE NO. 14 BY 3" HEX AHED PIN SCREWS.

0.350" DIAMETER BY 24" LONG ALUMINUM LOCK PIN, AT TOP AND BOTTOM OF EACH LOCKING SLAT, FASTENED WITH ONE 10-24 BY 0.430" LONG THUMB TURN SCREWS.

ALTERNATIVES NOTES:

A) SECTIONS (1) & (2) ON THESE GROUPS CAN BE COMBINED AND MOST BE TAKEN THE LOWEST SPAN.

B) SECTIONS (1) & (2) ON THESE GROUPS CAN BE COMBINED AND MOST BE TAKEN THE LOWEST SPAN.

RS-1 ALUMINUM SHUTTER
HIGH VELOCITY SHUTTER SYSTEM

JHA Associates, LTD
PHONE (876) 929-5648 FAX (876) 995-9161
15 Retirement Crescent
Kingston 5, Jamaica WI

REV. No	DESCRIPTION	DATE
1	-	-
2	-	-
3	-	-
4	-	-

V.M. Engineering Inc.
C. of A. No. 27633
11278 S.W. 153rd Place
MIAMI, FLORIDA 33196
TEL: 786-281-6968
TEL: 305-383-5896

MORGAN VILLANUEVA, P.E.
STRUCTURAL ENGINEER
FLORIDA LIC. NO.: 60292

Approved as complying with the Florida Building Code
Date 11/25/2009
NOA# 09-0806.04
Miami Dade Product Control Division
By

MIAMI-DADE COUNTY

SCALE:
DATE: 5-31-09

F.B.C.
(High Velocity Hurricane Zone)

DWG No: **09-017RS1**

SHEET **6 OF 9**

MAXIMUM WIND LOAD DESIGN PRESSURE "W" AND CORRESPONDING MAXIMUM ANCHOR SPACING (in.) SCHEDULE.

MAXIMUM DESIGN LOAD "W" (p.s.f.)	WALL MOUNTING INSTALLATION AT TOP OR BOTTOM (SECTIONS 5 THRU 8) (TO CONCRETE)			WALL MOUNTING INSTALLATION AT TOP OR BOTTOM (SECTIONS 5 THRU 8) (TO MASONRY)		
	SHUTTER SPAN			SHUTTER SPAN		
	5'-0" OR LESS	5'-0" TO 8'-6"	8'-6" TO MAX. ALLOWED	5'-0" OR LESS	5'-0" TO 8'-6"	8'-6" TO MAX. ALLOWED
LESS THAN 30.0	9	9	9	9	9	9
	9	9	9	9	9	9
	9	9	9	9	9	9
FROM >30.0 TO 60.0	9	9	9	9	7	5
	9	9	8	9	9	9
	9	9	9	9	9	7
FROM >60.0 TO 70.0	9	9	9	9	5.5	4
	9	9	8	9	9	8.5
	9	9	9	9	8	6
FROM >70.0 TO 80.0	9	9	9	9	4	3.5
	9	9	6.5	9	8	7.5
	9	9	9	9	6	5.5
FROM >80.0 TO 90.0	9	9	6	8	3.5	n/a
	9	9	n/a	9	6.5	n/a
	9	9	n/a	9	5	n/a
FROM >90.0 TO 100.0	9	9	n/a	7	3	n/a
	9	6	n/a	9	6	n/a
	9	9	n/a	9	4.5	n/a
FROM >100.0 TO 120.0	9	8	n/a	5.5	n/a	n/a
	8.5	4	n/a	9	5	n/a
	7	9	n/a	7.5	3	n/a
FROM >120.0 TO 140.0	9	7	n/a	4	n/a	n/a
	8	3.5	n/a	7.5	4.5	n/a
	7	8	n/a	5.5	3	n/a
FROM >140.0 TO 160.0	9	6	n/a	3	n/a	n/a
	6.5	3.5	n/a	6	4	n/a
	6.5	7	n/a	4	3	n/a
FROM >160.0 TO 180.0	7.5	5	n/a	n/a	n/a	n/a
	6	3	n/a	5	4	n/a
	6	6	n/a	3.5	3	n/a
FROM >180.0 TO 200.0	9	n/a	n/a	4	n/a	n/a
	9	n/a	n/a	3.5	n/a	n/a
	9	n/a	n/a	3.5	n/a	n/a

MAXIMUM ANCHOR SPACINGS FOR TAPCON, MAXI-SET TAPCONS OR CRETE-FLEX SS4 ARE VALID FOR 3 1/2" EDGE DISTANCE. FOR EDGE DISTANCE LESS THAN 3 1/2", REDUCE ANCHOR SPACING BY MULTIPLYING SPACING GIVEN ON SCHEDULE BY THE BELLOW FACTORS. THE MINIMUM EDGE DISTANCE FOR CALK-IN ANCHORS IS 2 1/2". **THE MINIMUM ANCHOR SPACING FOR TAPCON, MAXI-SET TAPCONS OR CRETE-FLEX SS4 IS 3" O.C. AND 2 1/2" FOR CALK-IN ANCHORS.**

EXISTING E. D.	FACTOR
3"	.90
2 1/2"	.75
2"	.50

ANCHOR LEGEND
TAPCON OR MAXI-SET TAPCONS
CRETE-FLEX SS4
CALK-IN

MAXIMUM WIND LOAD DESIGN PRESSURE "W" AND CORRESPONDING MAXIMUM ANCHOR SPACING (in.) SCHEDULE.

MAXIMUM DESIGN LOAD "W" (p.s.f.)	CEILING & FLOOR MOUNTING INSTALLATION AT TOP OR BOTTOM (SECTIONS 1,2 & 9) (TO CONCRETE)		
	SHUTTER SPAN		
	5'-0" OR LESS	5'-0" TO 8'-6"	8'-6" TO MAX. ALLOWED
LESS THAN 30.0	9	9	9
	9	9	9
	9	9	9
FROM >30.0 TO 60.0	9	7.5	6
	9	9	9
	9	7.5	6
FROM >60.0 TO 70.0	9	6.5	5.5
	9	9	8
	9	6.5	5.5
FROM >70.D TO 80.0	9	5.5	5
	9	8	7.5
	9	5.5	5
FROM >80.0 TO 90.0	8.5	5	4.5
	9	7	6.5
	8.5	5	4.5
FROM >90.0 TO 100.0	7.5	4.5	4.5
	9	6.5	6
	8	4.5	4.5
FROM >100.0 TO 120.0	6.5	4	n/a
	9	5.5	n/a
	6.5	4	n/a
FROM >120.0 TO 140.0	5.5	3.5	n/a
	8	5	n/a
	5.5	3.5	n/a
FROM >140.0 TO 160.0	5	3.5	n/a
	7	5.0	n/a
	5	3.5	n/a
FROM >160.0 TO 180.0	4	3.5	n/a
	6.5	n/a	n/a
	4.5	n/a	n/a
FROM >180.0 TO 200.0	4.0	n/a	n/a
	6.5	n/a	n/a
	4.5	n/a	n/a

MAXIMUM WIND LOAD DESIGN PRESSURE "W" AND CORRESPONDING MAXIMUM ANCHOR SPACING (in.) SCHEDULE.

MAXIMUM DESIGN LOAD "W" (p.s.f.)	CEILING & FLOOR MOUNTING INSTALLATION AT TOP OR BOTTOM (SECTIONS 3 & 4) (TO CONCRETE)		
	SHUTTER SPAN		
	5'-0" OR LESS	5'-0" TO 8'-6"	8'-6" TO MAX. ALLOWED
LESS THAN 30.0	9	9	9
	9	9	9
	9	9	9
FROM >30.0 TO 60.0	9	9	6.5
	9	9	9
	9	9	6
FROM >60.0 TO 70.0	9	8	5.5
	9	9	8
	9	8	5.5
FROM >70.0 TO 80.0	9	7	4.5
	9	9	7
	9	7	4.5
FROM >80.0 TO 90.0	9	6	4
	9	9	6
	9	6	4
FROM >90.0 TO 100.0	9	5.5	3.5
	9	8	5.5
	9	5.5	3.5
FROM >100.0 TO 120.0	8	4.5	3.5
	9	6.5	5
	7.5	4.5	3.5
FROM >120.0 TO 140.0	6.5	4	3
	9	6	4.5
	6.5	4	3
FROM >140.0 TO 160.0	6	3.5	3
	8.5	5	4.5
	5.5	3.5	3
FROM >160.0 TO 180.0	5	3	n/a
	7.5	4.5	4
	5	3	2.5
FROM >180.0 TO 200.0	4.5	3	n/a
	7	4	n/a
	4.5	3	n/a

MAXIMUM WIND LOAD DESIGN PRESSURE "W" AND CORRESPONDING MAXIMUM ANCHOR SPACING (in.) SCHEDULE.

MAXIMUM DESIGN LOAD "W" (p.s.f.)	WALL MOUNTING INSTALLATION AT TOP OR BOTTOM (SECTIONS 5 THRU 8) (TO CONCRETE)			WALL MOUNTING INSTALLATION AT TOP OR BOTTOM (SECTIONS 5 THRU 8) (TO MASONRY)		
	SHUTTER SPAN			SHUTTER SPAN		
	5'-0" OR LESS	5'-0" TO 8'-6"	8'-6" TO MAX. ALLOWED	5'-0" OR LESS	5'-0" TO 8'-6"	8'-6" TO MAX. ALLOWED
LESS THAN 30.0	9	9	9	9	9	9
	9	9	9	9	9	9
	9	9	9	9	9	9
FROM >30.0 TO 60.0	9	9	9	9	7	3.5
	9	9	9	9	9	7.5
	9	9	9	9	9	5.5
FROM >60.0 TO 70.0	9	9	7	9	6	n/a
	9	9	9	9	9	4.5
	9	9	8	9	9	3.5
FROM >70.0 TO 80.0	9	9	5	9	4.5	n/a
	9	9	7	9	9	3.5
	9	9	6	9	6.5	2.5
FROM >80.0 TO 90.0	9	8.5	4	8	n/a	n/a
	9	9	6	9	5.5	n/a
	9	9	5	9	4	n/a
FROM >90.0 TO 100.0	9	6	3.5	7.5	n/a	n/a
	9	8	5	9	4	n/a
	9	7	4	9	3	n/a
FROM >100.0 TO 120.0	9	4	n/a	6	n/a	n/a
	9	5	3.5	9	n/a	n/a
	9	4.5	3	9	2.5	n/a
FROM >120.0 TO 140.0	9	3	n/a	4	n/a	n/a
	9	4	3	8	n/a	n/a
	9	3.5	2.5	5.5	n/a	n/a
FROM >140.0 TO 160.0	7	n/a	n/a	n/a	n/a	n/a
	9	3	n/a	4.5	n/a	n/a
	8.5	2.5	n/a	3.5	n/a	n/a
FROM >160.0 TO 180.0	5	n/a	n/a	n/a	n/a	n/a
	7	n/a	n/a	3.5	n/a	n/a
	6	n/a	n/a	2.5	n/a	n/a
FROM >180.0 TO 200.0	4	n/a	n/a	n/a	n/a	n/a
	5.5	n/a	n/a	n/a	n/a	n/a
	5	n/a	n/a	n/a	n/a	n/a

RS-1 ALUMINUM SHUTTER
HIGH VELOCITY SHUTTER SYSTEM

JHA Associates, LTD
PHONE (876) 929-5648 FAX (876) 995-9181
15 Retirement Crescent
Kingston 5, Jamaica WI

REV. No	DESCRIPTION	DATE
1	-	-
2	-	-
3	-	-
4	-	-

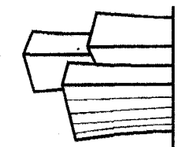

V.M. Engineering Inc.
C. of A. No. 27633
11278 S.W. 153rd Place
MIAMI, FLORIDA 33196
TEL: 786-281-6968
TEL: 305-383-5896

05/31/09

MORGAN VILLANUEVA, P.E.
STRUCTURAL ENGINEER
FLORIDA LIC. NO.: 60292

Approved as complying with the Florida Building Code
Date 11/25/2009
NOA# 09-0806.04
Miami Dade Product Control Division
By _____

MIAMI-DADE COUNTY

SCALE:
DATE: 5-31-09

F.B.C.
(High Velocity Hurricane Zone)

DWG No: **09-017RS1**

SHEET **7 OF 9**

NOTE:
ALL WOOD MEMBERS SHALL COMPLIED WITH THE NATIONAL DESIGN SPECIFICATIONS CURRENT EDITION, MINIMUM OF STRUCTURAL GRADE Fb=2000 psi AND SPECIFIC GRAVITY OF 0.55

RECOMMENDED INSTALLATIONS AT STRUCTURAL WOOD MEMBERS

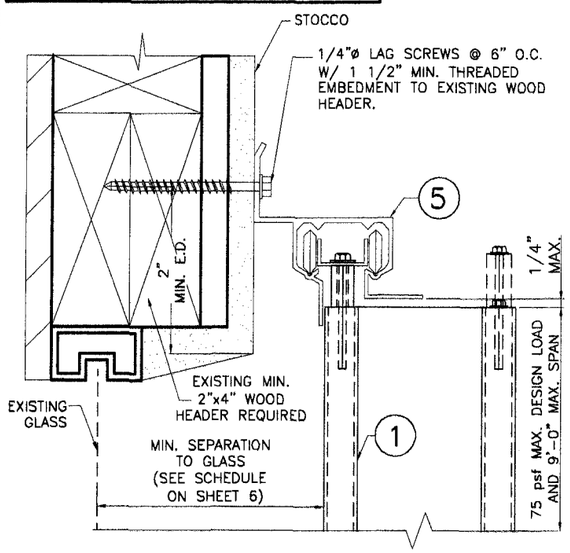

(10) WALL CONNECTION AT TOP

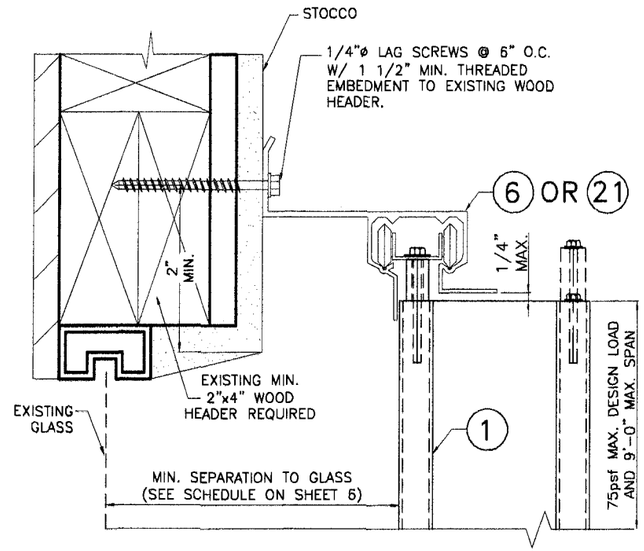

(12) WALL CONNECTION AT TOP

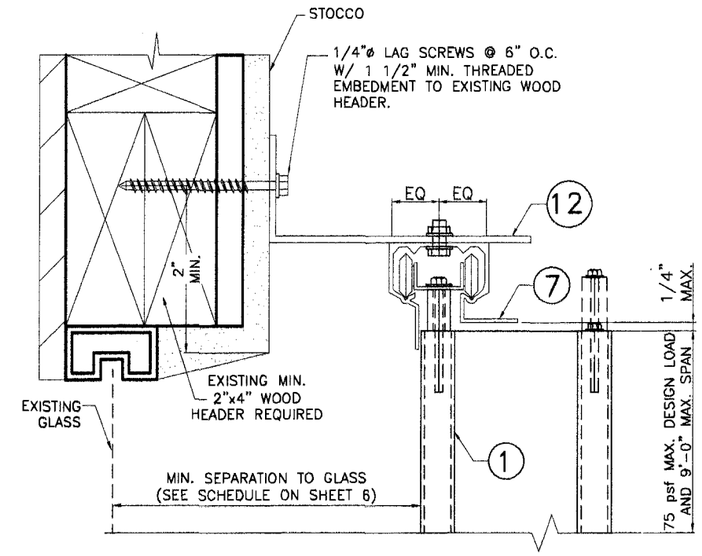

(15) B.O WALL CONNECTION AT TOP

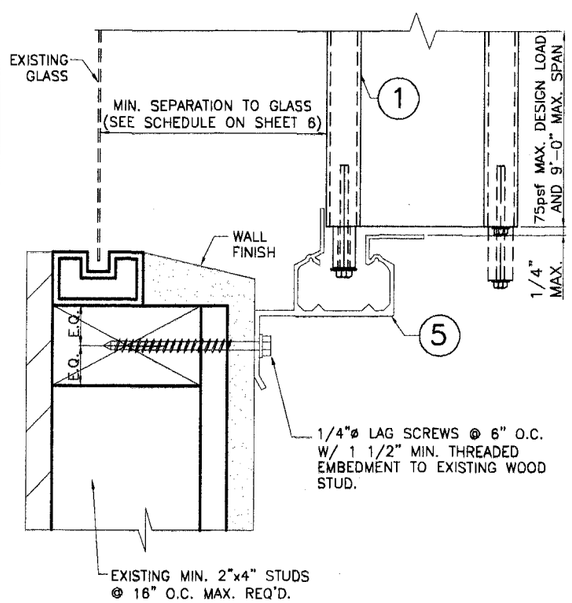

(11) WALL CONNECTION AT BOTTOM

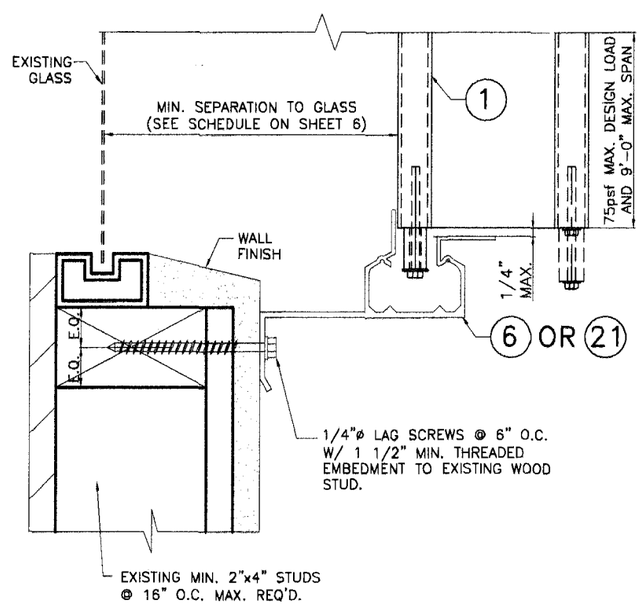

(14) WALL CONNECTION AT BOTTOM

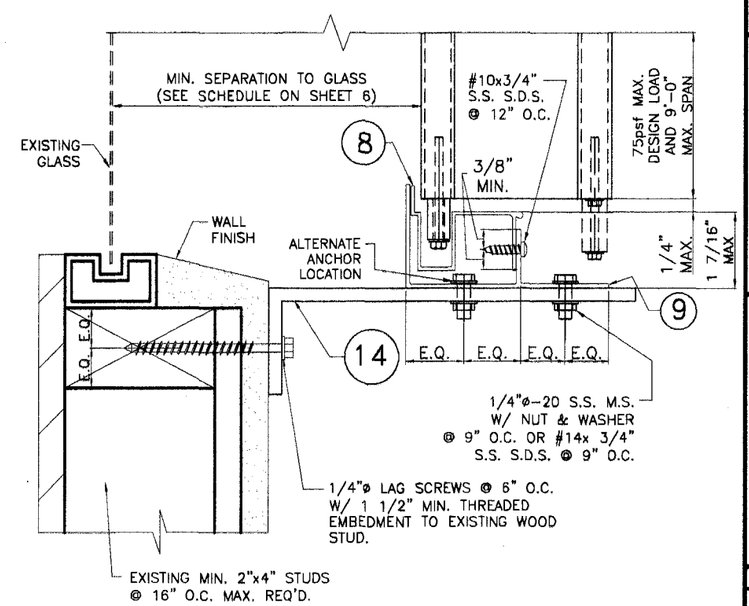

(16) B.O WALL CONNECTION AT BOTTOM

RS-1 ALUMINUM SHUTTER
HIGH VELOCITY SHUTTER SYSTEM

JHA Associates, LTD
PHONE (876) 929-5648 FAX (876) 995-9161
15 Retirement Crescent
Kingston 5, Jamaica WI

REV. No	DESCRIPTION	DATE
1	-	-
2	-	-
3	-	-
4	-	-

V.M. Engineering Inc.
C. of A. No. 27633
11278 S.W. 153rd Place
MIAMI, FLORIDA 33196
TEL: 786-281-6968
TEL: 305-383-5896

MORGAN VILLANUEVA, P.E.
STRUCTURAL ENGINEER
FLORIDA LIC. NO.: 60292

Approved as complying with the Florida Building Code
Date 11/25/2009
NOA# 09-0806.04
Miami Dade Product Control Division
By

MIAMI-DADE COUNTY

SCALE:
DATE: 5-31-09

F.B.C.
(High Velocity Hurricane Zone)

DWG No: 09-017RS1

SHEET 8 OF 9

NOTE:
ALL WOOD MEMBERS SHALL COMPLIED WITH THE NATIONAL DESIGN SPECIFICATIONS CURRENT EDITION, MINIMUM OF STRUCTURAL GRADE Fb=2000 psi AND SPECIFIC GRAVITY OF 0.55

RECOMMENDED INSTALLATIONS AT STRUCTURAL WOOD MEMBERS

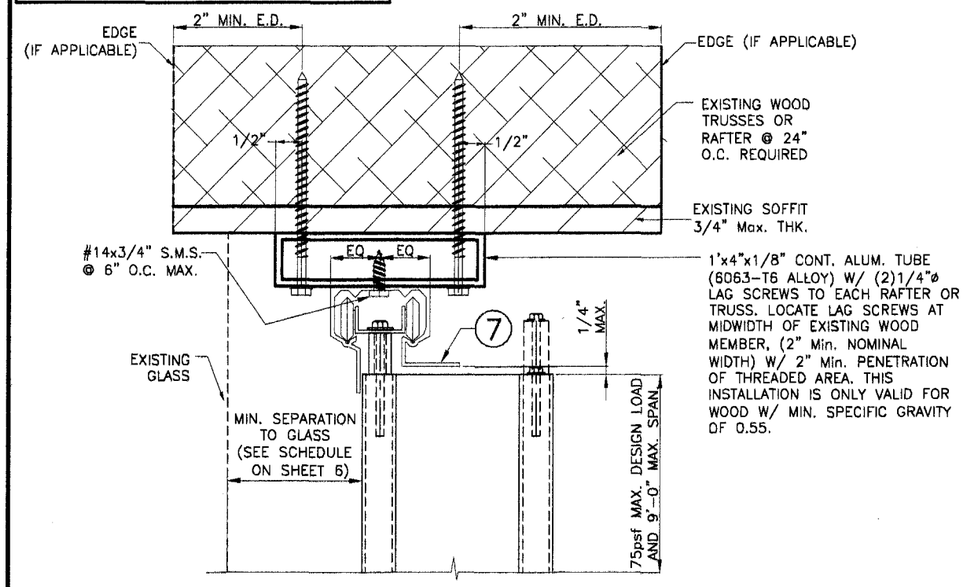

10 HOLLOW CEILING MOUNTING INSTALLATION

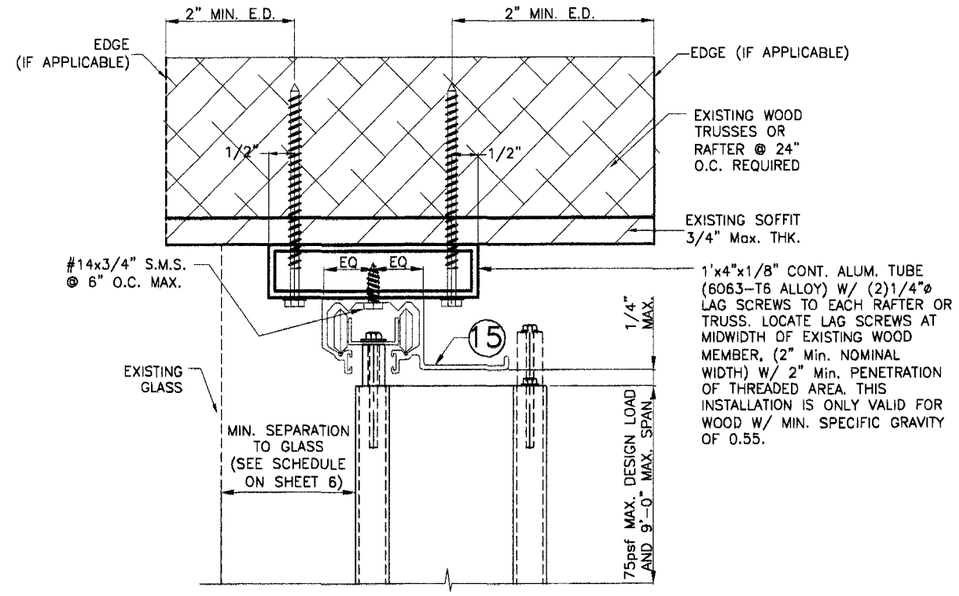

12 HOLLOW CEILING MOUNTING INSTALLATION

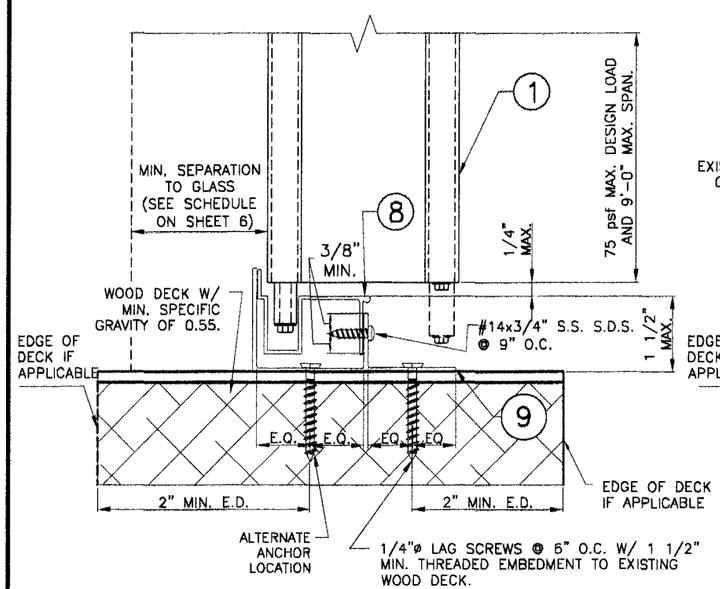

11 SILL & ADJUSTABLE FLOOR MOUNTING INSTALLATION

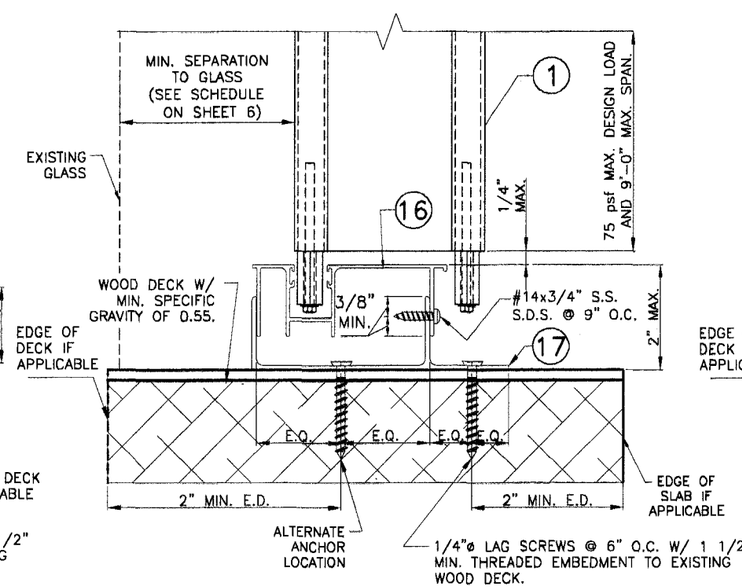

14 SILL & ADJUSTABLE FLOOR MOUNTING INSTALLATION

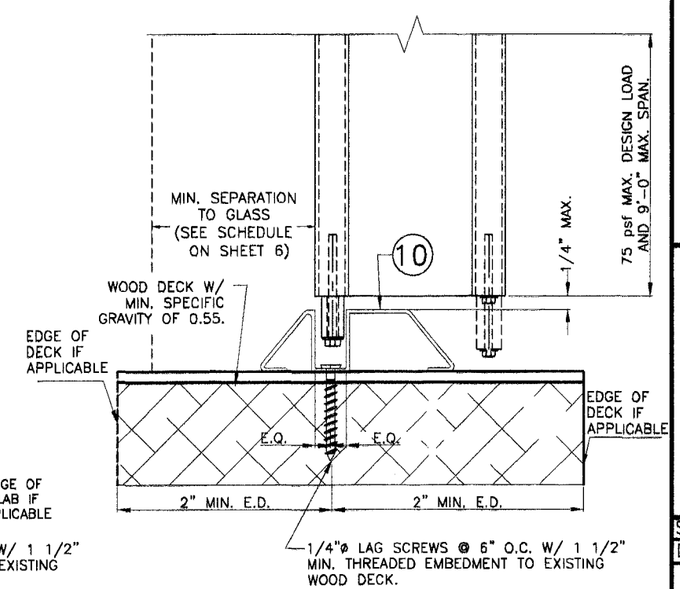

9 THRESHOLD FLOOR MOUNTING INSTALLATION

RS-1 ALUMINUM SHUTTER
HIGH VELOCITY SHUTTER SYSTEM

JHA Associates, LTD
PHONE (876) 929-5648 FAX (876) 995-9161
15 Retirement Crescent
Kingston 5, Jamaica WI

REV. No	DESCRIPTION	DATE
1	-	-
2	-	-
3	-	-
4	-	-

V.M. Engineering Inc.
C. of A. No. 27633
11278 S.W. 153rd Place
MIAMI, FLORIDA 33196
TEL: 786-281-6968
TEL: 305-383-5896

MORGAN VILLANUEVA, P.E.
STRUCTURAL ENGINEER
FLORIDA LIC. NO.: 60292

Approved as complying with the Florida Building Code
Date 11/25/2009
NOA# 09-0806.04
Miami Dade Product Control Division
By

MIAMI-DADE COUNTY

SCALE:
DATE: 5-31-09
F.B.C. 3/8" = 1"
(High Velocity Hurricane Zone)
DWG No: 09-017RS1
SHEET 9 OF 9