MIAMI-DADE

BUILDING CODE COMPLIANCE OFFICE (BCCO)
PRODUCT CONTROL DIVISION

MIAMI-DADE COUNTY, FLORIDA
METRO-DADE FLAGLER BUILDING
140 WEST FLAGLER STREET, SUITE 1603
MIAMI, FLORIDA 33130-1563
(305) 375-2901 FAX (305) 375-2908

NOTICE OF ACCEPTANCE (NOA)

Polyglass USA Inc.
150 Lyon Drive
Fernley, NV 89408

SCOPE:
This NOA is being issued under the applicable rules and regulations governing the use of construction materials. The documentation submitted has been reviewed by Miami-Dade County Product Control Division and accepted by the Board of Rules and Appeals (BORA) to be used in Miami Dade County and other areas where allowed by the Authority Having Jurisdiction (AHJ).

his NOA shall not be valid after the expiration date stated below. The Miami-Dade County Product Control Division (In Miami Dade County) and/or the AHJ (in areas other than Miami Dade County) reserve the right to have this product or material tested for quality assurance purposes. If this product or material fails to perform in the accepted manner, the manufacturer will incur the expense of such testing and the AHJ may immediately revoke, modify, or suspend the use of such product or material within their jurisdiction. BORA reserves the right to revoke this acceptance, if it is determined by Miami-Dade County Product Control Division that this product or material fails to meet the requirements of the applicable building code.

This product is approved as described herein, and has been designed to comply with the Florida Building Code and the High Velocity Hurricane Zone of the Florida Building Code.

DESCRIPTION: Polystick MTS, IR-Xe, TU, TU Plus and TU P

LABELING: Each unit shall bear a permanent label with the manufacturer's name or logo, city, state and following statement: "Miami-Dade County Product Control Approved", unless otherwise noted herein.

RENEWAL of this NOA shall be considered after a renewal application has been filed and there has been no change in the applicable building code negatively affecting the performance of this product.

TERMINATION of this NOA will occur after the expiration date or if there has been a revision or change in the materials, use, and/or manufacture of the product or process. Misuse of this NOA as an endorsement of any product, for sales, advertising or any other purposes shall automatically terminate this NOA. Failure to comply with any section of this NOA shall be cause for termination and removal of NOA.

ADVERTISEMENT: The NOA number preceded by the words Miami-Dade County, Florida, and followed by the expiration date may be displayed in advertising literature. If any portion of the NOA is displayed, then it shall be done in its entirety.

INSPECTION: A copy of this entire NOA shall be provided to the user by the manufacturer or its distributors and shall be available for inspection at the job site at the request of the Building Official.

This NOA revises NOA No. 08-0929.03 and consists of pages 1 through 6.
The submitted documentation was reviewed by Jorge L. Acebo.

MIAMI-DADE COUNTY APPROVED

ROOFING COMPONENT APPROVAL

Category: Roofing
Sub-Category: Underlayment
Material: SBS , APP Self-Adhering Modified Bitumen

PRODUCTS DESCRIPTION:

Product	Dimensions	Test Specification	Product Description
Polystick MTS underlayment *Manufacturing Location* **#2**	Roll: 65'8" x 3'3-$^3/_8$" 60 mils thick	TAS 103	A homogeneous, rubberized asphalt waterproofing membrane, glass fiber reinforced with polyolefinic film on the upper surface for use as an underlayment for metal roofing, roof tile, slate tiles and shingle underlayment.
Polystick IR-Xe underlayment *Manufacturing Location* **#1 & #2**	Roll: 65'8" x 3'3-$^3/_8$" 80 mils thick	TAS 103 and ASTM D 1970	A fine granular/sand top surface self-adhering, APP polymer modified, fiberglass reinforced, bituminous sheet material for use as an underlayment in sloped roof assemblies. Designed as an ice & rain shield and as a flat roof tile underlayment.
Polystick TU underlayment *Manufacturing Location* **#1 & #2**	Roll: 32'10" x 3'3-$^3/_8$" 100 mils thick	TAS 103 and ASTM D 1970	A heavy granuled surface self adhering, APP polymer modified, fiberglass or polyester reinforced, bituminous sheet material for use as an underlayment in sloped roof assemblies. Designed as a a roof tile underlayment.
Polystick TU Plus underlayment (Facer of Membrane Labeled in Orange or Black Ink) *Manufacturing Location* **#1 & #2**	Roll: 65'8" x 3'3-$^3/_8$" 80 mils thick	TAS 103 and ASTM D 1970	A non-wicking fabric surfaced, self-adhering, APP polymer modified, fiberglass reinforced with a high strength polyester fabric, bituminous sheet material for use an an underlayment in sloped roof assemblies. Designed as a metal roofing and roof tile underlayment.
Polystick TU P underlayment *Manufacturing Location* **#2**	Roll: 32'10" x 3'3-3/8" 130 mils thick	TAS 103 and ASTM D 1970	A rubberized asphalt waterproofing membrane, glass-fiber/polyester reinforced, with a granular surface designed for use as a tile roof underlayment.

MANUFACTURING PLANTS:

1. 555 Oakridge Road, Hazelton, PA
2. 621 Sniveley Avenue, Winter Haven, FL

EVIDENCE SUBMITTED:

Test Agency	Test Identifier	Test Name/Report	Date
Exterior Research & Design, LLC	#11756.04.01-1	TAS 103	04/27/01
	#11756.08.01-1	ASTM D 1970	08/14/01
	#02202.08.05	TAS 103	08/29/05
Trinity | ERD	#P5110.08.07	TAS 103	08/29/07
	P10870.09.08-R1	TAS 103	12/04/08
	P10870.04.09	TAS 103/ASTM D4798 & G155	04/13/09
PRI Asphalt Technologies	PRI01111	ASTM D 4977	04/08/02
	PUSA-005-02-01	ASTM D 4977	01/31/02
	PUSA-018-02-01	ASTM D 2523	07/14/03
	PUSA-035-02-01	TAS 103	09/29/06
	PUSA-033-02-01	ASTM D 1970	01/12/06
	PUSA-055-02-02	TAS 103	12/10/07
	PUSA-083-02-01	TAS 103	06/30/08
	PUSA-089-02-01	TAS 103/ASTM D4798 & G155	07/06/09
Momentum Technologies, Inc.	JX20H7A	TAS 103/ASTM D4798 & G155	04/01/08
	RX14E8A	TAS 103/ASTM D4798 & G155	11/09/09
	DX23D8B	TAS 103/ASTM D4798 & G155	02/18/10
	DX23D8A	TAS 103/ASTM D4798 & G155	02/18/10

INSTALLATION PROCEDURES:

Deck Type 1: Wood, non-insulated

Base Sheet: One or more plies of ASTM D 226 Type II or ASTM D 2626.

Fastening: Per FBC 1518.2 & 1518.4 Nails and tin caps 12" grid, 6" o.c. at a minimum 4" head lap. (for base sheet only)

Membrane: Polystick membranes self-adhered.

Surfacing: None

1. All nails in the deck shall be carefully checked for protruding heads. Re-fasten any loose decking panels, and sweep the deck thoroughly to remove any dust and debris prior to application.
2. Place the underlayment over metal drip edge in accordance with RAS 111.
3. Place the first course of membrane parallel to the eave, rolling the membrane to obtain maximum contact. Remove the release film as the membrane is applied. . All side laps shall be a minimum of 3-½" and end laps shall be a minimum of 6." Roll the membrane into place after removing the release strip. Vertical strapping of the roof with Polystick is acceptable. Membrane shall be back nailed in accordance with applicable building code.
4. When applying the membrane in the valley, start at the low point and work to the high point, rolling the membrane from the center outward in both directions.
5. For ridge applications, center the membrane and roll from the center outward in both directions.
6. Roll or broom the entire membrane surface so as to have full contact with the surface, giving special attention to lap areas.
7. Flash vent pipes, stacks, chimneys and penetrations in compliance with Roof Assembly current Product Control Notice of Acceptance.
8. All protrusions or drains shall be initially taped with a 6" piece of underlayment. The flashing tape shall be pressed in place and formed around the protrusion to ensure a tight fit. A second layer of Polystick shall be applied over the underlayment.

GENERAL LIMITATIONS:

1. Fire classification is not part of this acceptance.
2. Polystick MTS and TU Plus may be used in asphaltic shingles, wood shakes and shingles, non-structural metal roofing, roof tile systems and quarry slate roof assemblies. IR-Xe, TU, and TU P may be used in all the previous assemblies listed except metal roofing.
3. Deck requirements shall be in compliance with applicable building code.
4. Polystick membranes shall be applied to a smooth, clean and dry surface. The deck shall be free of irregularities.
5. Polystick membranes shall not be adhered directly over a pre-existing roof membrane as a recover system.
6. The following membranes ***manufactured in Winter Haven, FL Plant;*** Polystick MTS, IR-Xe, TU, TU P and TU Plus shall not be left exposed as a temporary roof for longer than 180 days after application. Polystick TU Plus ***manufactured in Hazelton, PA Plant*** shall not be left exposed as a temporary roof for longer than 180 days after application. Polystick IR-Xe and TU ***manufactured in Hazelton, PA Plant*** shall not be left exposed as a temporary roof for longer than 30 days after application. Polyglass reserves the right to revise or alter product exposure times; not to exceed the preceeding maximum time limitations.
7. All products listed herein shall have a quality assurance audit in accordance with the Florida Building Code and Rule 9B-72 of the Florida Administrative Code.
8. In roof tile application, data for the attachment resistance of roof tiles shall be as set forth in the roof tile manufacturer's Notice of Acceptance. Polystick TU and TU Plus may be used in both adhesive set and mechanically fastened roof tile applications. Polystick IR-Xe is limited to mechanically fastened roof tile applications. Polystick MTS is limited to mechanically fastened with battens roof tile applications. Polystick TU P may be used in both adhesive set and mechanically fastened roof tile applications with the exception of mortar set tile applications.
9. The maximum roof slope for use as roof tile underlayment for (direct-to-deck) tile assemblies shall be as follows: (See Table Below)

Tile Profile	Polystick MTS	Polystick IR-Xe	Polystick TU, TU Plus TU P
Flat Tile	Prohibited without battens	5:12	No limitation
Profiled Tile	Prohibited without battens	Prohibited	No limitation

The above slope limitations can be exceeded only by using battens and counter battens in accordance with the Approved Tile System Notice of Acceptance and applicable Florida Building Code requirements. **Polystick MTS shall not be used in direct-to-deck applications. Battens are required for both loading and installation of tiles at all times.**

10. Care should be taken during the loading procedure to keep foot traffic to a minimum and to avoid dropping of tile directly on the underlayment. Refer to Polyglass' Tile loading detail below for loading procedure for all underlayments except Polystick MTS which shall be loaded onto battens.

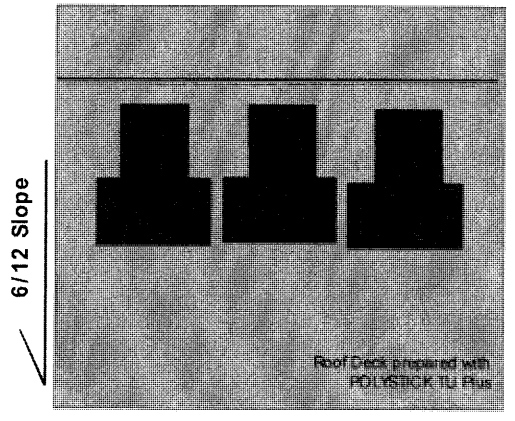

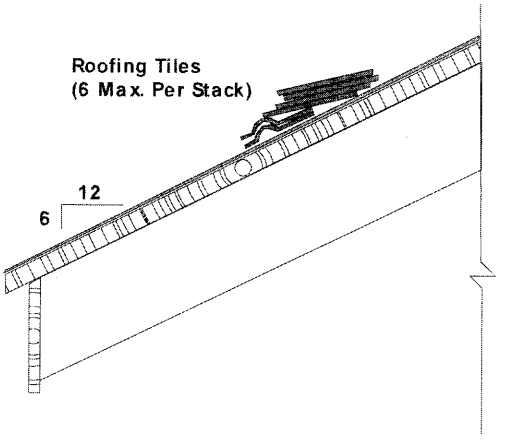

GENERAL LIMITATIONS: (CONTINUED)

11. Refer to prepared roofing system Product Control Notice of Acceptance for listed approval of this product with specific prepared roofing products. Polystick MTS, IR-Xe, TU, TU Plus and TU P may be used with any approved roof covering Notice of Acceptance listing Polystick MTS, IR-Xe, TU, TU Plus and TU P as a component part of an assembly in the Notice of Acceptance. If Polystick MTS, IR-Xe, TU, TU Plus and TU P is not listed, a request may be made to the Authority Having Jurisdiction (AHJ) or the Miami-Dade County Product Control Department for approval provided that appropriate documentation is provided to detail compatibility of the products, wind uplift resistance, and fire testing results.

LABELING:

1. All membranes or packaging shall bear the imprint or identifiable marking of the manufacturer's name or logo, city and state of manufacturing facility and the following statement: "Miami-Dade County Product Control Approved" or the Miami-Dade County Product Control Seal as shown below.

MIAMI-DADE COUNTY
APPROVED

BUILDING PERMIT REQUIREMENTS:

Application for building permit shall be accompanied by copies of the following:

1. This Notice of Acceptance.
2. Any other documents required by the Building Official or applicable building code in order to properly evaluate the installation of this materials.

POLYGLASS GENERAL APPLICATION GUIDELINES FOR POLYSTICK MEMBRANES:

1. Polyglass does accept the direct application of Polystick underlayment membranes to wood decks. Installers are cautioned to refer to applicable local building codes prior to direct deck installation to ensure this is acceptable. Please also refer to applicable Product Data Sheets of the corresponding products.
2. All rolls, with the exception of Polystick TU Plus should be back-nailed in selvage edge seam as per Polyglass Back Nailing Guide. Nails shall be, 11 gauge ring shank type, applied with a minimum 1" metal disk as required in Dade County or simplex type nail as otherwise allowable in other regions, at a minimum rate of 12" o.c. Polystick TU Plus should be back nailed in designated area marked "nail area, area para clavar" on the face of membrane, with the above stated nails and/or disks. The head lap membrane is to cover the area being back-nailed. (Please refer to applicable local building codes prior to installation.)
3. All seal lap seams (selvage laps) must be rolled with a hand roller to ensure full contact.
4. All fabric over fabric; and granule over granule end laps, shall have a 6" wide, uniform layer of Polyglass Polyplus 55 Premium Modified Flashing Cement, Polyglass Polyplus 50 Premium MB Flashing Cement, Polyglass PG500 MB Flashing Cement, Mule-Hide 241 Premium Modified Flashing Cement, Mule-Hide 251 Premium Wet/Dry Elastomeric Flashing Cement, or Mule-Hide 421 Mod Bit Flashing Adhesive Trowel Grade mastic, applied in between the application of the lap. The use of mastic between the laps does not apply to Polystick MTS.

5. A maximum of 6 tiles per stack are allowed when loading tile on the underlayments. Refer to the Polyglass Tile Loading Guidelines. See General Limitations #9 and #10.

6. Battens and/or Counter-battens, as required by the tile manufacturers NOA's, must be used on all projects for pitch/slopes of 7"/12" or greater. It is suggested that on pitch/slopes in excess of 6 ¼"/12", precautions should be taken, such as the use of battens to prevent tile sliding during the loading process.

7. Minimum cure time after membrane installation & before loading of roofing tiles is Forty-Eight (48) Hours.

8. Polystick membranes may not be used in any exposed application such as crickets, exposed valleys, or exposed roof to wall details.

9. Repair of Polystick membranes is to be accomplished by applying Polyglass Polyplus 55 Premium Modified Flashing Cement, Polyglass Polyplus 50 Premium MB Flashing Cement, Polyglass PG500 MB Flashing Cement, Mule-Hide 241 Premium Modified Flashing Cement, Mule-Hide 251 Premium Wet/Dry Elastomeric Flashing Cement, or Mule-Hide 421 Mod Bit Flashing Adhesive Trowel Grade mastic to the area in need of repair, followed by a patch of the Polystick material of like kind should be set and hand rolled in place over the area needing such repair. Patching membrane shall be a minimum of 6 inches in either direction. The repair should be installed in such a way so that water will run parallel to or over the top of all laps of the patch.

10. All self-adhered membranes must be rolled to ensure full contact with approved substrates. Polyglass requires a minimum of 40 lbs for a weighted roller for the rolling of the field membrane. Hand rollers are acceptable for rolling of patches or small areas of the roof. Brooming may be used where slope prohibits rolling.

11. All approved substrates should be dry, clean and properly prepared, before any application of Polystick membranes commences. An approved substrate technical bulletin can be furnished upon request. It is recommended to refer to applicable building codes prior to installation to verify acceptable substrates.

12. The Polyglass Miami-Dade Notice of Acceptance (NOA) approval for Polystick membranes and PolyProtector UDL can be furnished upon request by our Technical Services Department by calling 1 (800) 894-4563.

13. Polyglass offers a 10 year Limited Material Warranty on all properly installed Polystick self-adhered underlayments. Warranty must be requested and registered by Polyglass to be in force.

14. Questions in regards to the application of Polyglass products should be directed to our Technical Services Department at 1 (800) 894-4563.

15. Polyglass recommends that applicators follow good roofing practices and applicable procedures as outlined by the National Roofing Contractors Association (NRCA).

PLEASE CHECK WITH LOCAL BUILDING CODES REGARDING LIMITATIONS OF SPECIFIC APPLICATIONS. LOCAL CODES MAY SUPERSEDE POLYGLASS REQUIREMENTS AND RECOMMENDATIONS.

END OF THIS ACCEPTANCE