MIAMI-DADE COUNTY
BUILDING CODE COMPLIANCE OFFICE (BCCO)
PRODUCT CONTROL DIVISION

MIAMI–DADE COUNTY, FLORIDA
METRO–DADE FLAGLER BUILDING
140 WEST FLAGLER STREET, SUITE 1107
MIAMI, FLORIDA 33130–1563
(305) 375–2902 FAX (305) 372–6339
www.miamidade.gov/buildingcode

NOTICE OF ACCEPTANCE (NOA)

R.C. Aluminum Industries, Inc.
2805 NW 75th Avenue
Miami, FL 33122

SCOPE:

This NOA is being issued under the applicable rules and regulations governing the use of construction materials. The documentation submitted has been reviewed by Miami–Dade County Product Control Division and accepted by the Board of Rules and Appeals (BORA) to be used in Miami–Dade County and other areas where allowed by the Authority Having Jurisdiction (AHJ).

This NOA shall not be valid after the expiration date stated below. The Miami–Dade County Product Control Division (In Miami–Dade County) and/or the AHJ (in areas other than Miami–Dade County) reserve the right to have this product or material tested for quality assurance purposes. If this product or material fails to perform in the accepted manner, the manufacturer will incur the expense of such testing and the AHJ may immediately revoke, modify, or suspend the use of such product or material within their jurisdiction. BORA reserves the right to revoke this acceptance, if it is determined by Miami–Dade County Product Control Division that this product or material fails to meet the requirements of the applicable building code.

This product is approved as described herein, and has been designed to comply with the Florida Building Code, including the High Velocity Hurricane Zone.

DESCRIPTION: Series "PH 3050" Aluminum Window Wall System – L.M.I.

APPROVAL DOCUMENT: Drawing No. **W07–57**, titled "PH3050 Alum. Window Wall System (L.M.I.)", sheets 1 through 6 of 6, dated 08/01/07, with revision "**A**" dated 07/07/09, prepared by Al–Farooq Corporation, signed and sealed by Arshad Viqar, P. E., bearing the Miami–Dade County Product Control Revision stamp with the Notice of Acceptance number and expiration date by the Miami–Dade County Product Control Division.

MISSILE IMPACT RATING: Large and Small Missile Impact Resistant

LABELING: Each unit shall bear a permanent label with the manufacturer's name or logo, city, state and following statement: "Miami–Dade County Product Control Approved", unless otherwise noted herein.

RENEWAL of this NOA shall be considered after a renewal application has been filed and there has been no change in the applicable building code negatively affecting the performance of this product.

TERMINATION of this NOA will occur after the expiration date or if there has been a revision or change in the materials, use, and/or manufacture of the product or process. Misuse of this NOA as an endorsement of any product, for sales, advertising or any other purposes shall automatically terminate this NOA. Failure to comply with any section of this NOA shall be cause for termination and removal of NOA.

ADVERTISEMENT: The NOA number preceded by the words Miami–Dade County, Florida, and followed by the expiration date may be displayed in advertising literature. If any portion of the NOA is displayed, then it shall be done in its entirety.

INSPECTION: A copy of this entire NOA shall be provided to the user by the manufacturer or its distributors and shall be available for inspection at the job site at the request of the Building Official.

This NOA **revises NOA No. 07–1212.06** and consists of this page 1 and evidence pages E–1, E–2 and E–3, as well as approval document mentioned above.

The submitted documentation was reviewed by **Jaime D. Gascon, P. E.**

MIAMI-DADE COUNTY APPROVED

J. Gascon
10/28/09

R.C. Aluminum Industries, Inc.

NOTICE OF ACCEPTANCE: EVIDENCE SUBMITTED

A. DRAWINGS

1. Manufacturer's die drawings and sections.
2. Drawing No **W07–57**, titled "PH3050 Alum. Window Wall System (L.M.I.)", sheets 1 through 6 of 6, dated 08/01/07, with revision "**A**" dated 07/07/09, prepared by Al–Farooq Corporation, signed and sealed by Arshad Viqar, P. E.

B. TESTS

1. Test reports on: 1) Air Infiltration Test, per FBC, TAS 202–94
   2) Uniform Static Air Pressure Test, Loading per FBC TAS 202–94
   3) Water Resistance Test, per FBC, TAS 202–94
   4) Small Missile Impact Test per FBC, TAS 201–94
   5) Cyclic Wind Pressure Loading per FBC, TAS 203–94
   6) Forced Entry Test, per FBC 2411 3.2.1, TAS 202–94
   7) Safety Performance Specifications and Methods of Test, per FBC 35.5, ANSI Z97.1–04

   along with marked–up drawings and installation diagram of a series PH3050 aluminum window wall system, prepared by Fenestration Testing Laboratory, Inc., Test Report No. **FTL–5776**, dated 02/17/09, signed and sealed by Michael R. Wenzel, P. E.
2. Test reports on: 1) Air Infiltration Test, per FBC, TAS 202–94
   2) Uniform Static Air Pressure Test, Loading per FBC TAS 202–94
   3) Water Resistance Test, per FBC, TAS 202–94
   4) Large Missile Impact Test per FBC, TAS 201–94
   5) Cyclic Wind Pressure Loading per FBC, TAS 203–94

   along with marked–up drawings and installation diagram of a series PH3050 aluminum window wall system, prepared by Fenestration Testing Laboratory, Inc., Test Report No. **FTL–4968**, dated 10/10/07, signed and sealed by Edmundo Largaespada, P. E.

   (Submitted under previous NOA No. 07–1212.06)
3. Test reports on: 1) Air Infiltration Test, per FBC, TAS 202–94
   2) Uniform Static Air Pressure Test, Loading per FBC TAS 202–94
   3) Water Resistance Test, per FBC, TAS 202–94
   4) Small Missile Impact Test per FBC, TAS 201–94
   5) Cyclic Wind Pressure Loading per FBC, TAS 203–94

   along with marked–up drawings and installation diagram of a series PH3050 aluminum window wall system, prepared by Fenestration Testing Laboratory, Inc., Test Report No. **FTL–5316**, dated 07/10/07, signed and sealed by Carlos S. Rionda, P. E.

   (Submitted under previous NOA No. 07–1212.06)

Jaime D. Gascon, P. E.
Chief, Product Control Division
NOA No. 09–0812.12
Expiration Date: February 07, 2013
Approval Date: November 18, 2009

NOTICE OF ACCEPTANCE: EVIDENCE SUBMITTED

B. TESTS (CONTINUED)

4. Test reports on: 1) Air Infiltration Test, per FBC, TAS 202–94
2) Uniform Static Air Pressure Test, Loading per FBC TAS 202–94
3) Water Resistance Test, per FBC, TAS 202–94
along with marked–up drawings and installation diagram of a series PH3050 aluminum window wall system, prepared by Fenestration Testing Laboratory, Inc., Test Report No. **FTL–5043**, dated 02/02/07, signed and sealed by Carlos S. Rionda, P. E.
(Submitted under previous NOA No. 07–1212.06)

C. CALCULATIONS

1. Anchor verification calculations and structural analysis, complying with FBC–2007, prepared by Al–Farooq Corporation, dated 07/27/09, signed and sealed by Arshad Viqar, P. E.
Complies with ASTM E1300–02/ 04

D. QUALITY ASSURANCE

1. Miami–Dade Building Code Compliance Office (BCCO).

E. MATERIAL CERTIFICATIONS

1. Notice of Acceptance No. **09-0312.03** issued to E.I. DuPont DeNemours & Co., Inc. for their "**DuPont Sentry Glass® Interlayer**" dated 05/13/09, expiring on 01/14/12.

2. TREMCO Part No. **TR-14271E** EPDM exterior glazing gasket complying with ASTM C864 Option II exceptions, ASTM D412 1600 PSI, D395B 22 HRS 158°F.

F. STATEMENTS

1. Statement letter of conformance and no financial interest, dated July 06, 2009, signed and sealed by Arshad Viqar, P. E.

2. Laboratory compliance letter for Test Report No. **FTL–5776**, issued by Fenestration Testing Laboratory, Inc., dated February 17, 2009, signed and sealed by Michael R. Wenzel, P. E.

3. Proposal issued by BCCO, dated June 09, 2008, signed by Jaime D. Gascon, P. E.
(Submitted under previous NOA No. 07–1212.06)

4. Laboratory compliance letter for Test Report No. **FTL–4968,** issued by Fenestration Testing Laboratory, Inc., dated October 10, 2007, signed and sealed by Edmundo Largaespada, P. E.
(Submitted under previous NOA No. 07–1212.06)

Jaime D. Gascon, P. E.
Chief, Product Control Division
NOA No. 09–0312.12
Expiration Date: February 01, 2013
Approval Date: November 18, 2009

F. STATEMENTS (CONTINUED)

5. Laboratory compliance letter for Test Report No.'s **FTL–5043** and **FTL–5316,** issued by Fenestration Testing Laboratory, Inc., dated February 02 and July 10, 2007, signed and sealed by Carlos S. Rionda, P. E.
(Submitted under previous NOA No. 07–1212.06)

G. OTHERS

1. Notice of Acceptance No. **07–1212.06**, issued to R.C. Aluminum Industries, Inc. for their Series "**PH3050 Aluminum Window Wall System – L.M.I.**", approved on 02/07/08 and expiring on 02/07/13.

Jaime D. Gascon, P. E.
Chief, Product Control Division
NOA No. 09–0812.12
Expiration Date: February 07, 2013
Approval Date: November 18, 2009

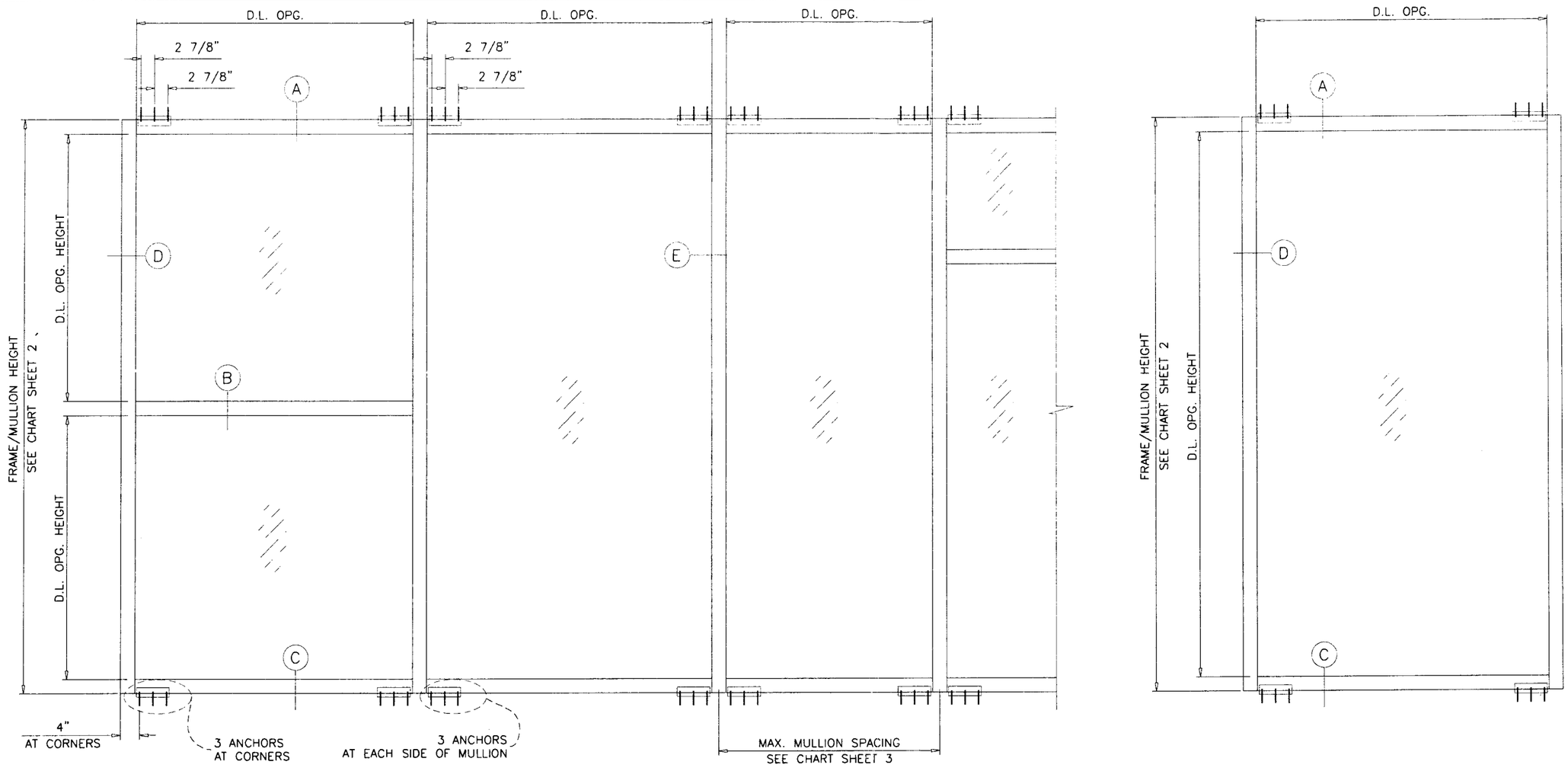

TYPICAL ELEVATIONS

THIS SYSTEM IS RATED FOR LARGE AND SMALL MISSILE IMPACT. SHUTTERS ARE NOT REQUIRED.

PH3050 ALUMINUM WINDOW WALL SYSTEM

THIS PRODUCT HAS BEEN DESIGNED AND TESTED TO COMPLY WITH THE REQUIREMENTS OF THE FLORIDA BUILDING CODE 2007 EDITION INCLUDING HIGH VELOCITY HURRICANE ZONE (HVHZ).

ANCHORS SHALL BE AS LISTED, SPACED AS SHOWN ON DETAILS, ANCHORS EMBEDMENT TO BASE MATERIAL SHALL BE BEYOND WALL DRESSING OR STUCCO.

ANCHORING OR LOADING CONDITIONS NOT SHOWN IN THESE DETAILS ARE NOT PART OF THIS APPROVAL.

MATERIALS INCLUDING BUT NOT LIMITED TO STEEL/METAL SCREWS, THAT COME INTO CONTACT WITH OTHER DISSIMILAR MATERIALS SHALL MEET THE REQUIREMENTS OF 2007 FLORIDA BLDG. CODE SECTION 2003.8.4.

INSTRUCTIONS:

USE CHARTS AS FOLLOWS.

STEP 1 DETERMINE DESIGN WIND LOAD REQUIREMENT BASED ON WIND VELOCITY, BLDG. HEIGHT, WIND ZONE USING APPLICABLE ASCE 7 STANDARD.

STEP 2 CHECK MULLION CAPACITY FOR A GIVEN SPACING AND HEIGHT USING CHARTS ON SHEET 2 THE CAPACITY SHOULD EXCEED THE DESIGN LOAD.

STEP 3 USING CHART ON SHEETS 3 SELECT ANCHOR OPTION WITH DESIGN RATING MORE THAN DESIGN LOAD SPECIFIED IN STEP 1 ABOVE.

STEP 4 THE LOWEST VALUE RESULTING FROM STEPS 2 & 3 SHALL APPLY TO ENTIRE SYSTEM.

PRODUCT COMPLIES WITH REQUIREMENTS OF ANSI Z97.1.

INSULATING LAMINATED GLASS
LARGE MISSILE IMPACT

Engr: ARSHAD VIQAR
CIVIL
FLA. PE # 38863
C.A.N. 3538

JUL 29 2009

PRODUCT REVISED
as complying with the Florida
Building Code
Acceptance No. 09-0812.12
Expiration Date FEBRUARY 07, 2013
By
Miami-Dade Product Control
Division

AL-FAROOQ CORPORATION
ENGINEERS & PROJECT DEVELOPMENT
1235 S.W. 87 AVE
MIAMI, FLORIDA 33174
TEL. (305) 264-8100 FAX. (305) 262-6978
STORE\W07-57RC

PH3050 ALUM. WINDOW WALL SYSTEM (L.M.I.)
R.C. ALUMINUM INDUSTRIES INC.
2805 N.W. 75 TH AVE.
MIAMI, FL. 33122
TEL. (305) 592-1515 FAX. (305) 592-2184

revisions:

no	date	by	description
A	07.07.09		UPDATED FOR 2007 FBC

date: 08-01-07
scale: 1/2"=1'-0"
dr. by: HAMID
chk. by:

drawing no.
W07-57

sheet 1 of 6

MULLION/JAMB DESIGN LOAD CAPACITY – PSF
WITHOUT INTERMEDIATE HORIZONTALS

NOMINAL DIMS.		JAMB 'J1' MULLION 'M1'		JAMB 'J2'	
WIDTH (W)	FRAME HEIGHT	EXT.(+)	INT.(−)	EXT.(+)	INT.(−)
36"	72"	120.0	120.0	120.0	120.0
42"		120.0	120.0	120.0	120.0
48"		120.0	120.0	120.0	120.0
54"		120.0	120.0	120.0	120.0
60"		120.0	120.0	120.0	120.0
66"		120.0	120.0	120.0	120.0
72"		120.0	120.0	120.0	120.0
36"	78"	120.0	120.0	120.0	120.0
42"		120.0	120.0	120.0	120.0
48"		120.0	120.0	120.0	120.0
54"		120.0	120.0	120.0	120.0
60"		120.0	120.0	120.0	120.0
66"		120.0	120.0	118.1	118.1
72"		120.0	120.0	115.2	115.2
36"	84"	120.0	120.0	120.0	120.0
42"		120.0	120.0	114.4	114.4
48"		120.0	120.0	102.9	102.9
54"		120.0	120.0	94.6	94.6
60"		120.0	120.0	88.5	88.5
66"		120.0	120.0	84.1	84.1
36"	90"	120.0	120.0	98.1	98.1
42"		120.0	120.0	85.8	85.8
48"		120.0	120.0	76.9	76.9
54"		120.0	120.0	70.3	70.3
60"		120.0	120.0	65.4	65.4
36"	96"	120.0	120.0	75.3	75.3
42"		120.0	120.0	65.7	65.7
48"		120.0	120.0	58.7	58.7
54"		120.0	120.0	53.4	53.4
60"		120.0	120.0	49.5	49.5
36"	102"	120.0	120.0	58.7	58.7
42"		120.0	120.0	51.1	51.1
48"		120.0	120.0	45.6	45.6
54"		120.0	120.0	41.4	41.4
36"	108"	120.0	120.0	46.5	46.5
42"		120.0	120.0	40.4	40.4
48"		120.0	120.0	35.9	35.9
54"		120.0	120.0	–	–
36"	114"	120.0	120.0	37.3	37.3
42"		120.0	120.0	32.4	32.4
48"		120.0	120.0	28.7	28.7
36"	120"	120.0	120.0	30.3	30.3
42"		120.0	120.0	26.3	26.3
48"		120.0	120.0	23.3	23.3

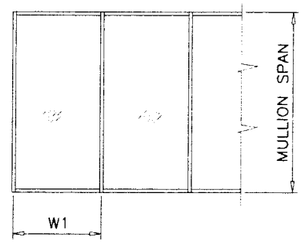

WIDTH (W) = W1
AT FRAME JAMB

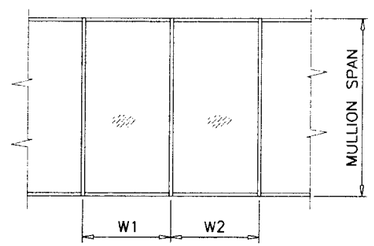

WIDTH (W) = $\frac{W1 + W2}{2}$
AT FRAME MULLION

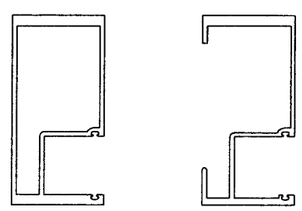

JAMB 'J1'

JAMB 'J2'

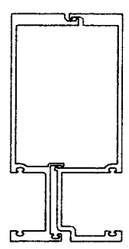

MULLION 'M1'

MULLION/JAMB DESIGN LOAD CAPACITY – PSF
WITH INTERMEDIATE HORIZONTALS

NOMINAL DIMS.		JAMB 'J1' MULLION 'M1'		JAMB 'J2'	
WIDTH (W)	FRAME HEIGHT	EXT.(+)	INT.(−)	EXT.(+)	INT.(−)
36"	72"	120.0	120.0	120.0	120.0
42"		120.0	120.0	120.0	120.0
48"		120.0	120.0	120.0	120.0
54"		120.0	120.0	120.0	120.0
60"		120.0	120.0	120.0	120.0
66"		120.0	120.0	120.0	120.0
72"		120.0	120.0	120.0	120.0
36"	78"	120.0	120.0	120.0	120.0
42"		120.0	120.0	120.0	120.0
48"		120.0	120.0	120.0	120.0
54"		120.0	120.0	120.0	120.0
60"		120.0	120.0	120.0	120.0
66"		120.0	120.0	110.3	110.3
72"		120.0	120.0	101.1	101.1
36"	84"	120.0	120.0	120.0	120.0
42"		120.0	120.0	120.0	120.0
48"		120.0	120.0	120.0	120.0
54"		120.0	120.0	111.0	111.0
60"		120.0	120.0	99.9	99.9
66"		120.0	120.0	90.8	90.8
36"	90"	120.0	120.0	120.0	120.0
42"		120.0	120.0	118.6	118.6
48"		120.0	120.0	103.7	103.7
54"		120.0	120.0	92.2	92.2
60"		120.0	120.0	83.0	83.0
36"	96"	120.0	120.0	115.6	115.6
42"		120.0	120.0	99.1	99.1
48"		120.0	120.0	86.7	86.7
54"		120.0	120.0	77.1	77.1
60"		120.0	120.0	69.4	69.4
36"	102"	120.0	120.0	96.4	96.4
42"		120.0	120.0	82.6	82.6
48"		120.0	120.0	72.3	72.3
54"		120.0	120.0	64.3	64.3
36"	108"	120.0	120.0	74.1	74.1
42"		120.0	120.0	63.6	63.6
48"		120.0	120.0	55.6	55.6
54"		120.0	120.0	–	–
36"	114"	120.0	120.0	58.0	58.0
42"		120.0	120.0	49.7	49.7
48"		120.0	120.0	43.5	43.5
36"	120"	120.0	120.0	46.0	46.0
42"		120.0	120.0	39.4	39.4
48"		120.0	120.0	34.5	34.5

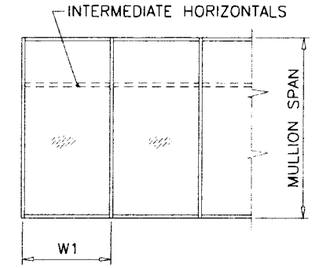

WIDTH (W) = W1
AT FRAME JAMB

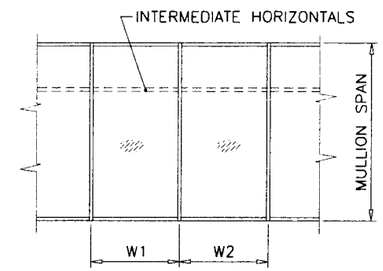

WIDTH (W) = $\frac{W1 + W2}{2}$
AT FRAME MULLION

Engr: ARSHAD VIQAR
CIVIL
FLA. PE # 38863
C.A.N. 3538

JUL 29 2009

PRODUCT REVISED
as complying with the Florida
Building Code
Acceptance No 09-0812.12
Expiration Date FEBRUARY 07, 2013
By
Miami-Dade Product Control
Division

AL-FAROOQ CORPORATION
ENGINEERS & PRODUCT DEVELOPMENT
1235 S.W. 87 AVE
MIAMI, FLORIDA 33174
TEL. (305) 264-8100 FAX. (305) 262-6978

STORE\W07-57RC

PH3050 ALUM. WINDOW WALL SYSTEM (L.M.I.)

R.C. ALUMINUM INDUSTRIES INC.
2805 N.W. 75 TH AVE.
MIAMI, FL. 33122
TEL. (305) 592-1515 FAX. (305) 592-2184

revisions:

no	date	by	description
A	07.07.09		UPDATED FOR 2007 FBC

date: 08-01-07
scale: –
dr. by: HAMID
chk. by:

drawing no.
W07-57

ANCHOR DESIGN LOAD CAPACITY - PSF				
NOMINAL DIMS.		ANCHORS TYPE 'A'		ANCHORS 'B'
		2" MIN. EDGE DIST.	2-1/2" MIN. EDGE DIST.	3/4" MIN. EDGE DIST.
WIDTH (W)	FRAME HEIGHT	EXT. (+) INT. (-)	EXT. (+) INT. (-)	EXT. (+) INT. (-)
36"	72"	120.0	120.0	120.0
42"		120.0	120.0	120.0
48"		120.0	120.0	120.0
54"		120.0	120.0	120.0
60"		120.0	120.0	120.0
66"		120.0	120.0	120.0
72"		110.7	120.0	120.0
36"	78"	120.0	120.0	120.0
42"		120.0	120.0	120.0
48"		120.0	120.0	120.0
54"		120.0	120.0	120.0
60"		120.0	120.0	120.0
66"		111.4	120.0	120.0
72"		102.2	120.0	120.0
36"	84"	120.0	120.0	120.0
42"		120.0	120.0	120.0
48"		120.0	120.0	120.0
54"		120.0	120.0	120.0
60"		113.8	120.0	120.0
66"		103.5	120.0	120.0
36"	90"	120.0	120.0	120.0
42"		120.0	120.0	120.0
48"		120.0	120.0	120.0
54"		118.0	120.0	120.0
60"		106.2	120.0	120.0
36"	96"	120.0	120.0	120.0
42"		120.0	120.0	120.0
48"		120.0	120.0	120.0
54"		110.7	120.0	120.0
60"		99.6	120.0	118.5
36"	102"	120.0	120.0	120.0
42"		120.0	120.0	120.0
48"		117.2	120.0	120.0
54"		104.2	120.0	120.0
36"	108"	120.0	120.0	120.0
42"		120.0	120.0	120.0
48"		110.7	120.0	120.0
36"	114"	120.0	120.0	120.0
42"		119.8	120.0	120.0
48"		104.8	120.0	120.0
36"	120"	120.0	120.0	120.0
42"		113.8	120.0	120.0
48"		99.6	120.0	118.5

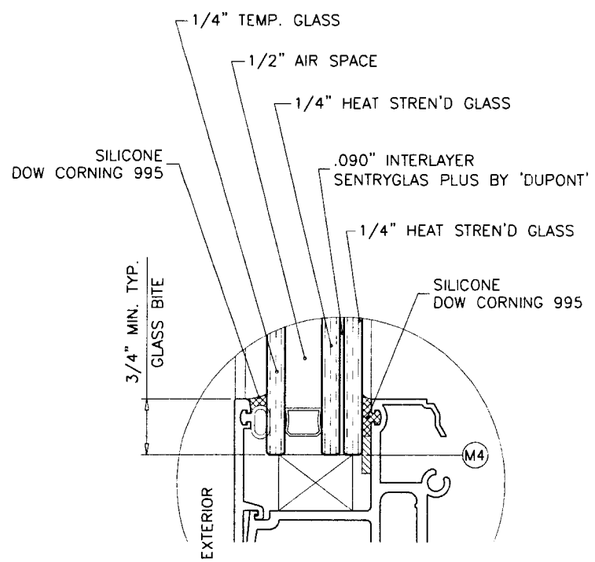

GLAZING DETAIL

1-3/8" OVERALL INSUL. LAM. GLASS

NOTE:
GLASS CAPACITIES ON THIS SHEET ARE
BASED ON ASTM E1300-02/04 (3 SEC. GUSTS).

Engr: ARSHAD VIQAR
CIVIL
FLA. PE # 38863
C.A.N. 3538

JUL 2 9 2009

PRODUCT REVISED
as complying with the Florida
Building Code
Acceptance No. 09-0812.12
Expiration Date FEBRUARY 07, 2013
By
Miami Dade Product Control
Division

AL-FAROOQ CORPORATION
ENGINEERS & PRODUCT DEVELOPMENT
1235 S.W. 87 AVE
MIAMI, FLORIDA 33174
TEL. (305) 264-8100 FAX. (305) 262-6978
STORE\W07-57RC

PH3050 ALUM. WINDOW WALL SYSTEM (L.M.I.)

R.C. ALUMINUM INDUSTRIES INC.
2805 N.W. 75 TH AVE.
MIAMI, FL. 33122
TEL. (305) 592-1515 FAX. (305) 592-2184

revisions:

no	date	by	description
A	07.07.09		UPDATED FOR 2007 FBC

date: 08-01-07
scale: -
dr. by: HAMID
chk. by:

drawing no.
W07-57

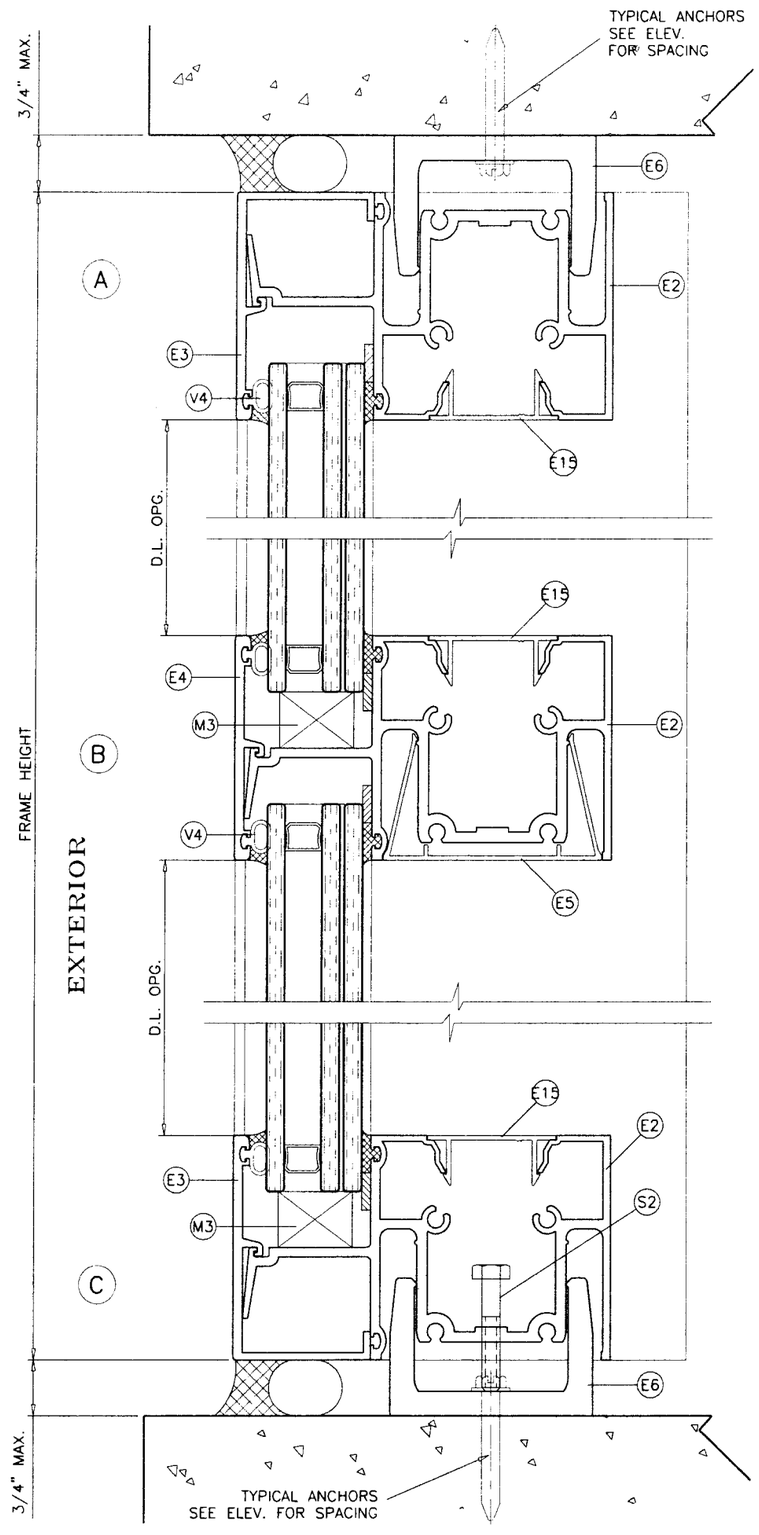

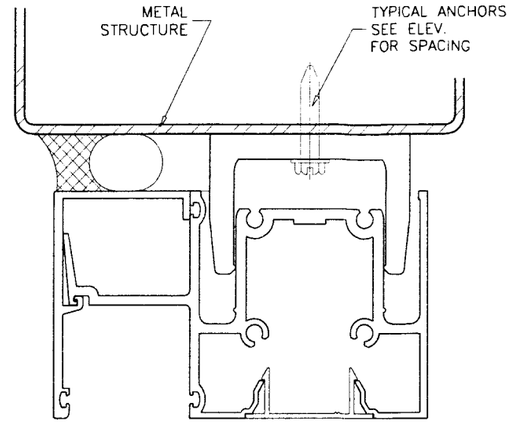

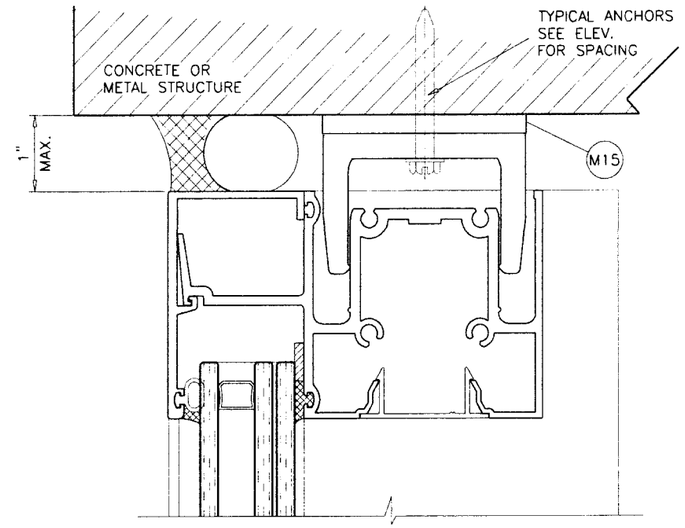

ALT. INSTALLATION AT HEAD/SILL
ANCHOR CHANNEL WITH SHIM PLATE

METAL STRUCTURES NOT BY RC ALUMINUM
MUST SUPPORT LOADS IMPOSED BY GLAZING SYSTEM AND
TRANSFER THEM TO THE BUILDING STRUCTURE.

TYPICAL ANCHORS: SEE ELEV. FOR SPACING

TYPE 'A'– 1/4" HILTI KWIK-CON II (Fu=163 KSI, Fy=157 KSI)

DIRECTLY INTO CONCRETE (3000 PSI MIN)
1-1/4" MIN. EMBED INTO CONCRETE

TYPE 'B'– 1/4-20 KWIK-FLEX SELF DRILLING SCREWS (Fu=92 KSI, Fy=120 KSI)
INTO METAL STRUCTURES
STEEL : 12 GA. MIN. (Fy = 36 KSI MIN.)
ALUMINUM : 1/8" THK. MIN. (6063-T6 MIN.)
(STEEL IN CONTACT WITH ALUMINUM TO BE PLATED OR PAINTED)

ANCHOR EDGE DISTANCES
INTO CONCRETE = 2" OR 2-1/2" MIN. (SEE CHART ON SHEET 3)
INTO METAL STRUCTURE = 3/4" MIN.

SEALANTS:

ALL FRAME CORNERS AND MULLION SEAMS SEALED
WITH SILICONE.

Engr: ARSHAD VIQAR
CIVIL
FLA. PE # 38863
C.A.N. 3538

JUL 2 9 2009

PRODUCT REVISED
In complying with the Florida
Building Code
Acceptance No 09-0812.12
Expiration Date FEBRUARY 07, 2013
By
Miami-Dade Product Control
Division

AL-FAROOQ CORPORATION
ENGINEERS & PRODUCT DEVELOPMENT
1235 S.W. 87 AVE
MIAMI, FLORIDA 33174
TEL. (305) 264-8100 FAX. (305) 262-6978
STORE\W07-57RC

PH3050 ALUM. WINDOW WALL SYSTEM (L.M.I.)
R.C. ALUMINUM INDUSTRIES INC.
2805 N.W. 75 TH AVE.
MIAMI, FL. 33122
TEL. (305) 592-1515 FAX. (305) 592-2184

revisions:

no	date	by	description
A	07.07.09		UPDATED FOR 2007 FBC

date: 08-01-07
scale: 1/2" = 1"
dr. by: HAMID
chk. by:

drawing no.
W07-57

ITEM NO.	PART NUMBER	QUANTITY	DESCRIPTION	MATERIAL	MANF./SUPPLIER/REMARKS
E1	PH3050-003	AS REQD.	OPEN BACK FRAME JAMB	6063-T6	–
E1A	PH3050-017	AS REQD.	CLOSED FRAME JAMB	6063-T6	–
E2	PH3050-004	AS REQD.	HEAD, SILL & INTERMIDIATE HORIZONTAL	6063-T6	–
E3	PH3050-005	AS REQD.	GLAZING RETAINER HEAD & SILL	6063-T6	–
E4	PH3050-006	AS REQD.	GLAZING RETAINER INTERMEDIATE	6063-T6	–
E5	PH3050-007	AS REQD.	INTERIOR HORIZONTAL COVER	6063-T6	–
E6	PH3050-008	AS REQD.	ANCHOR CHANNEL HEAD & SILL	6005-T5	7-3/4" LONG
E13	PH3050-015	AS REQD.	MALE MULLION	6005-T5	–
E14	PH3050-016	AS REQD.	FEMALE MULLION	6005-T5	–
E15	FX345-007	–	INTERIOR COVER	6063-T6	–
–	–	–	–	–	–
V4	V-032	AS REQD.	GLAZING GASKET	VINYL	AT HEAD/SILL/HORIZONTAL
V6	V-047	AS REQD.	MULLION GASKET	VINYL	–
V8	–	AS REQD.	ø 0.187 SPLINE	–	AT JAMB/MULLION
	–	–	–	–	–
S1	#14 X 1-1/4"	4/ CORNER	ASSEMBLY SCREWS	ST/ST	PH. PHL. SMS POINT "B"
S2	1/4-20 X 1-1/2"	AS REQD.	LEVELING SCREWS	–	HEX HEAD FULL THREAD
–	–	–	–	–	–
M1	–	2/ LITE	1/8" X 1/2" X 4" LG. SETTING BLOCK	NEOPRENE	AT 6" FROM EACH END
M3	–	2/ LITE	3/4" X 3/4" X 4" LG SETTING BLOCK	NEOPRENE	AT 6" FROM EACH END
M4	–	AS REQD.	1/8" X 1/2" SINGLE FACE TAPE V2100	–	–
M5	–	2/ LITE	7/8" X 7/8" X 4" LG SETTING BLOCK	NEOPRENE	AT 6" FROM EACH END
M15	–	AS REQD.	1/4" X 2-3/4" ANCHOR CHANNEL PLATE	6063-T6	7-3/4" LONG

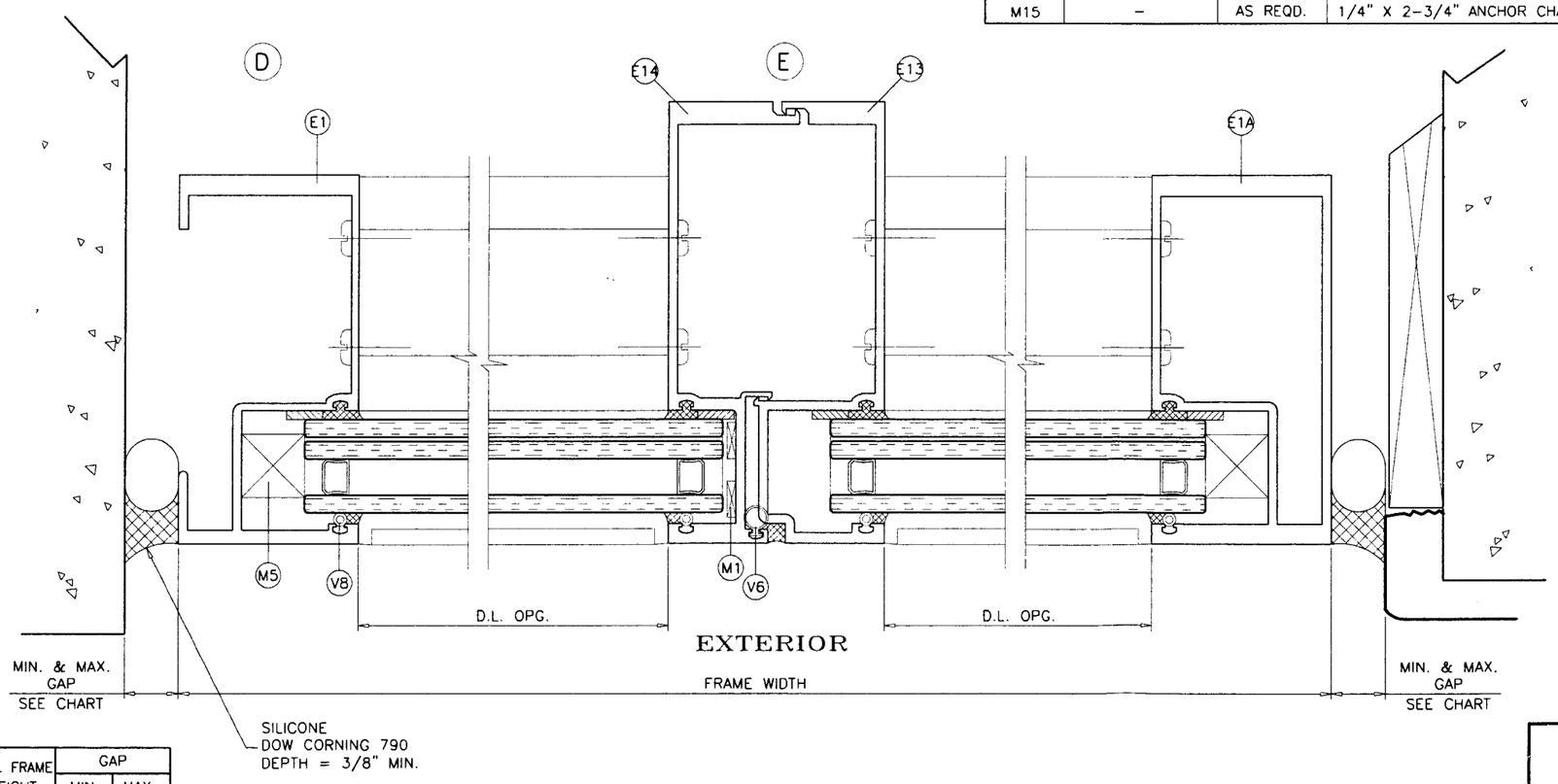

MAX. FRAME HEIGHT	GAP	
	MIN.	MAX.
72"	1/4"	3/4"
84"	3/8"	3/4"
96"	3/8"	3/4"
108"	3/8"	3/4"
120"	1/2"	3/4"

Engr: ARSHAD VIQAR
CIVIL
FLA. PE # 38863
C.A.N. 3538

JUL 29 2009

PRODUCT REVISED
as complying with the Florida
Building Code
Acceptance No 09-0812.12
Expiration Date FEBRUARY 07 2013
By
Miami Dade Product Control
Division

AL-FAROOQ CORPORATION
ENGINEERS & PRODUCT DEVELOPMENT
1235 S.W. 87 AVE
MIAMI, FLORIDA 33174
TEL. (305) 264-8100 FAX. (305) 262-6978
STORE\W07-57RC

PH3050 ALUM. WINDOW WALL SYSTEM (L.M.I.)

R.C. ALUMINUM INDUSTRIES INC.
2805 N.W. 75 TH AVE.
MIAMI, FL. 33122
TEL. (305) 592-1515 FAX. (305) 592-2184

revisions:

no	date	by	description
A	07.07.09		UPDATED FOR 2007 FBC

date: 08-01-07
scale: 1/2" = 1"
dr. by: HAMID
chk. by:

drawing no.
W07-57

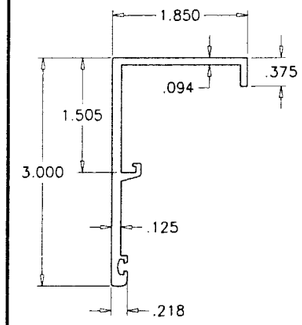

E3 GLAZING RETAINER HEAD/SILL

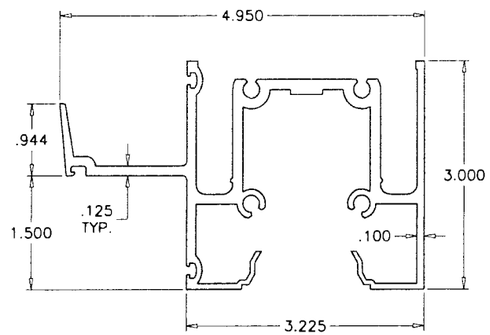

E2 FRAME HEAD/SILL/HORIZONTAL

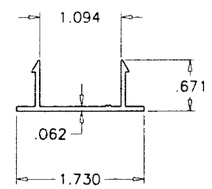

E15 COVER HEAD/SILL/HORIZONTAL

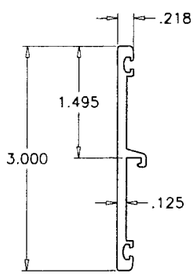

E4 GLAZING RETAINER HORIZONTAL

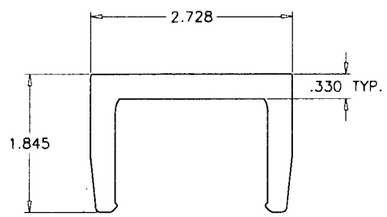

E6 ANCHOR

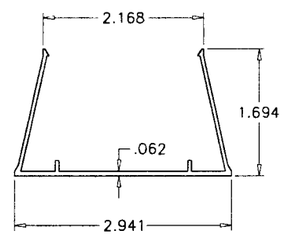

E5 INTERIOR COVER HORIZONTAL

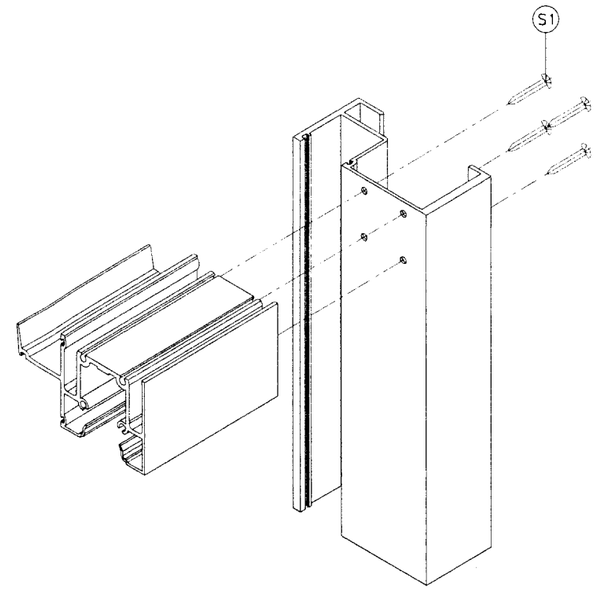

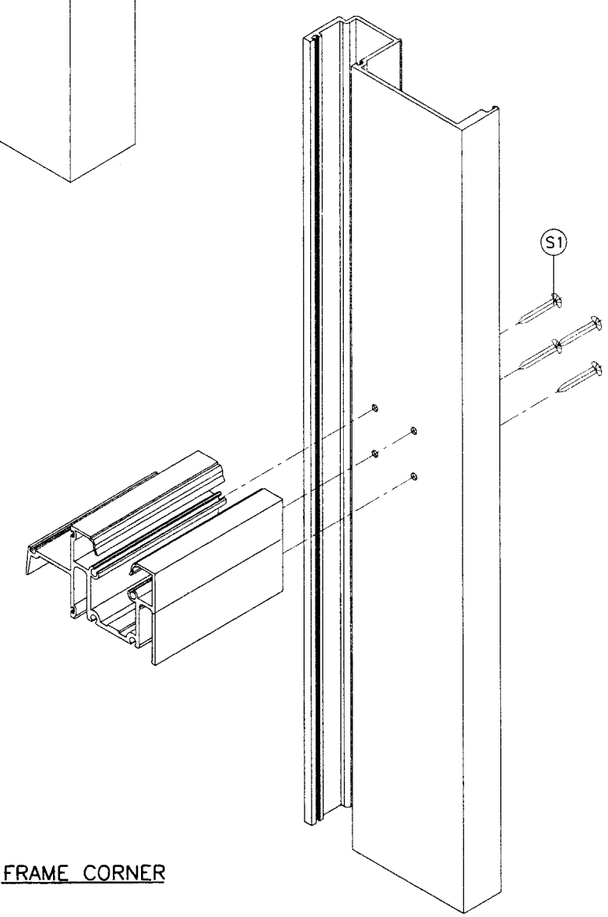

FRAME CORNER

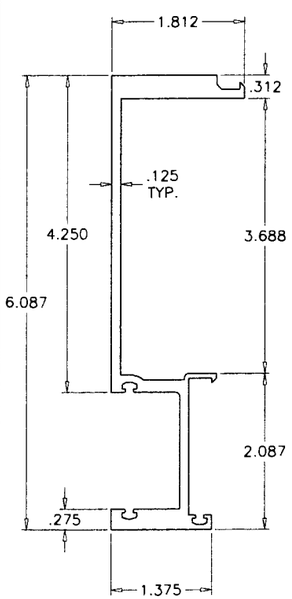

E14 MALE MULLION

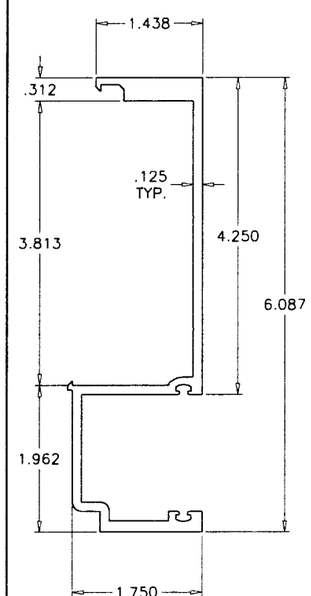

E13 FEMALE MULLION

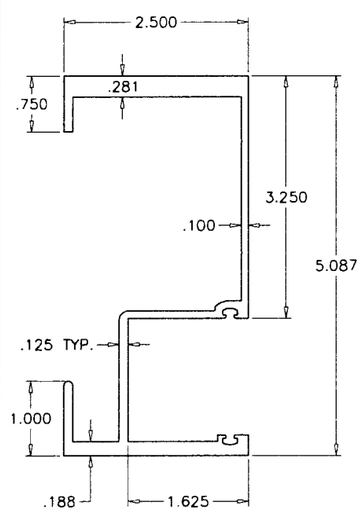

E1 OPEN BACK FRAME JAMB

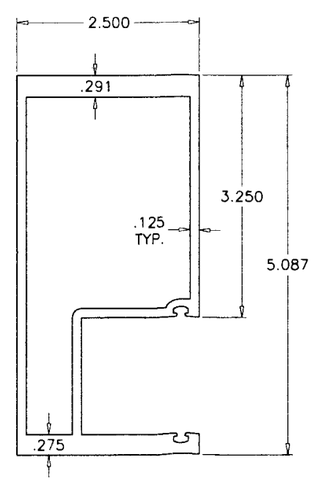

E1A CLOSED FRAME JAMB

Engr: ARSHAD VIQAR
CIVIL
FLA. PE # 38863
C.A.N. 3538

JUL 29 2009

PRODUCT REVISED
as complying with the Florida
Building Code
Amendment No. 09-0812.12
Expiration Date FEBRUARY 07, 2013
By
Miami Dade Product Control
Division

AL-FAROOQ CORPORATION
ENGINEERS & PRODUCT DEVELOPMENT
1235 S.W. 87 AVE
MIAMI, FLORIDA 33174
TEL. (305) 264-8100 FAX. (305) 262-6978

STORE\W07-57RC

PH3050 ALUM. WINDOW WALL SYSTEM (L.M.I.)

R.C. ALUMINUM INDUSTRIES INC.
2805 N.W. 75 TH AVE.
MIAMI, FL. 33122
TEL. (305) 592-1515 FAX. (305) 592-2184

revisions:

no	date	by	description
A	07.07.09		UPDATED FOR 2007 FBC

date: 08-01-07
scale: 1/2" = 1"
dr. by: HAMID
chk. by:

drawing no.
W07-57

sheet 6 of 6