MIAMI-DADE COUNTY
BUILDING CODE COMPLIANCE OFFICE (BCCO)
PRODUCT CONTROL DIVISION

MIAMI–DADE COUNTY, FLORIDA
METRO–DADE FLAGLER BUILDING
140 WEST FLAGLER STREET, SUITE 1107
MIAMI, FLORIDA 33130–1563
(305) 375–2902 FAX (305) 372–6339
www.miamidade.gov/buildingcode

NOTICE OF ACCEPTANCE (NOA)

R. C. Aluminum Industries, Inc.
2805 N.W. 75th Ave.
Miami, FL 33122

SCOPE:

This NOA is being issued under the applicable rules and regulations governing the use of construction materials. The documentation submitted has been reviewed by Miami–Dade County Product Control Division and accepted by the Board of Rules and Appeals (BORA) to be used in Miami–Dade County and other areas where allowed by the Authority Having Jurisdiction (AHJ).

This NOA shall not be valid after the expiration date stated below. The Miami–Dade County Product Control Division (In Miami–Dade County) and/or the AHJ (in areas other than Miami–Dade County) reserve the right to have this product or material tested for quality assurance purposes. If this product or material fails to perform in the accepted manner, the manufacturer will incur the expense of such testing and the AHJ may immediately revoke, modify, or suspend the use of such product or material within their jurisdiction. BORA reserves the right to revoke this acceptance, if it is determined by Miami–Dade County Product Control Division that this product or material fails to meet the requirements of the applicable building code.

This product is approved as described herein, and has been designed to comply with the Florida Building Code, including the High Velocity Hurricane Zone.

DESCRIPTION: Series "HP 3070" Aluminum Window Wall System – S.M.I.

APPROVAL DOCUMENT: Drawing No. **W04–26**, titled "HP 3070 Alum. Window Wall System (S.M.I.)", sheets 1 through 12 of 12, prepared by Al–Farooq Corporation, dated 03/23/04 with revision "**G**" dated 07/09/09, signed and sealed by Arshad Viqar, P. E., bearing the Miami–Dade County Product Control Revision stamp with the Notice of Acceptance number and expiration date by the Miami–Dade County Product Control Division.

MISSILE IMPACT RATING: Small Missile Impact Resistant.

LIMITATIONS: Miami–Dade County Product Control Approved Shutters Or Protection Devices Shall Be Required For Installations Up To 30 Ft. Above Grade.

LABELING: Each unit shall bear a permanent label with the manufacturer's name or logo, city, state and following statement: "Miami–Dade County Product Control Approved", unless otherwise noted herein.

RENEWAL of this NOA shall be considered after a renewal application has been filed and there has been no change in the applicable building code negatively affecting the performance of this product.

TERMINATION of this NOA will occur after the expiration date or if there has been a revision or change in the materials, use, and/or manufacture of the product or process. Misuse of this NOA as an endorsement of any product, for sales, advertising or any other purposes shall automatically terminate this NOA. Failure to comply with any section of this NOA shall be cause for termination and removal of NOA.

ADVERTISEMENT: The NOA number preceded by the words Miami–Dade County, Florida, and followed by the expiration date may be displayed in advertising literature. If any portion of the NOA is displayed, then it shall be done in its entirety.

INSPECTION: A copy of this entire NOA shall be provided to the user by the manufacturer or its distributors and shall be available for inspection at the job site at the request of the Building Official.

This NOA **revises NOA No. 08–1119.08** and consists of this page 1 and evidence pages E–1, E–2 and E–3, as well as approval document mentioned above.

The submitted documentation was reviewed by **Jaime D. Gascon, P. E.**

MIAMI-DADE COUNTY APPROVED

J. Gascon
10/29/09

R. C. Aluminum Industries, Inc.

NOTICE OF ACCEPTANCE: EVIDENCE SUBMITTED

A. DRAWINGS

1. Manufacturer's die drawings and sections.
2. Drawing No **W04–26**, titled "HP 3070 Alum. Window Wall System (S.M.I.)", sheets 1 through 12 of 12, prepared by Al–Farooq Corporation, dated 03/23/04 with revision "**G**" dated 07/09/09, signed and sealed by Arshad Viqar, P. E.

B. TESTS

1. Test reports on: 1) Air Infiltration Test, per FBC, TAS 202–94
   2) Uniform Static Air Pressure Test, Loading per FBC, TAS 202–94
   3) Water Resistance Test, per FBC, TAS 202–94
   4) Small Missile Impact Test per FBC, TAS 201–94
   5) Cyclic Wind Pressure Loading per FBC, TAS 203–94
   6) Forced Entry Resistant Test, per FBC, TAS 202–94
   7) Safety Performance (Drop Load Impact) Test per ANSI Z97.1–04 (CPSC 16 CFR 1201)

   along with marked–up drawings and installation diagram of an aluminum window wall system, prepared by Fenestration Testing Laboratory, Inc., Test Reports No. **FTL–5739** dated 01/20/09, signed and sealed by Carlos S. Rionda, P. E.
2. Test reports on: 1) Air Infiltration Test, per FBC, TAS 202–94
   2) Uniform Static Air Pressure Test, Loading per FBC, TAS 202–94
   3) Water Resistance Test, per FBC, TAS 202–94
   4) Small Missile Impact Test per FBC, TAS 201–94
   5) Cyclic Wind Pressure Loading per FBC, TAS 203–94
   6) Forced Entry Resistant Test, per FBC, TAS 202–94

   along with marked–up drawings and installation diagram of an aluminum window wall system with Transom and Sliding Glass Door, prepared by Fenestration Testing Laboratory, Inc., Test Report No. **FTL–5108**, dated 02/02/07, signed and sealed by Michael S. Wenzel, P. E.
   (Submitted under NOA No. 07–1019.02)
3. Test reports on: 1) Air Infiltration Test, per FBC, TAS 202–94
   2) Uniform Static Air Pressure Test, Loading per FBC, TAS 202–94
   3) Water Resistance Test, per FBC, TAS 202–94
   4) Small Missile Impact Test per FBC, TAS 201–94
   5) Cyclic Wind Pressure Loading per FBC, TAS 203–94
   6) Impact (Drop Load) Test, per CPSC 16 CFR 1201

   along with marked–up drawings and installation diagram of an aluminum window wall system, prepared by Fenestration Testing Laboratory, Inc., Test Report No. **FTL–5189**, dated 05/04/07, signed and sealed by Carlos S. Rionda, P. E.
   (Submitted under NOA No. 07–1019.02)

Jaime D. Gascon, P. E.
Chief, Product Control Division
NOA No. 09–0812.16
Expiration Date: July 01, 2014
Approval Date: November 18, 2009

B. TESTS (Continued)

4. Test reports on: 1) Safety Performance (Drop Load Impact) Test per CPSC 16 CFR 1201 (ANSI Z97.1-84),
along with marked–up drawings and installation diagram of an aluminum window wall system, prepared by Fenestration Testing Laboratory, Inc., Test Report No. **FTL–5319** and **FTL–5320,** dated 07/05/07, signed and sealed by Carlos S. Rionda, P. E.
(Submitted under NOA No. 07–1019.02)

5. Test reports on: 1) Air Infiltration Test, per FBC, TAS 202–94
2) Uniform Static Air Pressure Test, Loading per FBC, TAS 202–94
3) Water Resistance Test, per FBC, TAS 202–94
4) Small Missile Impact Test, per FBC, TAS 201–94
5) Cyclic Wind Pressure Loading per FBC, TAS 203–94
6) Forced Entry Resistant Test, per FBC, TAS 202–94
along with marked–up drawings and installation diagram of an aluminum window wall system, prepared by Fenestration Testing Laboratory, Inc., Test Report No. **FTL–4981** dated 10/31/06 and **FTL–4992** dated 06/20/06, signed and sealed by Edmundo Largaespada, P. E.
(Submitted under NOA No. 07–1019.02)

6. Test reports on: 1) Air Infiltration Test, per FBC, TAS 202–94
2) Uniform Static Air Pressure Test, Loading per FBC, TAS 202–94
3) Water Resistance Test, per FBC, TAS 202–94
4) Small Missile Impact Test per FBC, TAS 201–94
5) Cyclic Wind Pressure Loading per FBC, TAS 203–94
6) Forced Entry Resistant Test, per FBC, TAS 202–94
along with marked–up drawings and installation diagram of an aluminum window wall system, prepared by Fenestration Testing Laboratory, Inc., Test Reports No. **FTL–3928** dated 10/08/03, and **FTL–3970** dated 11/10/03, both signed and sealed by Edmundo J. Largaespada, P. E.
(Submitted under NOA No. 04–0512-02)

C. CALCULATIONS

1. Anchor verification calculations and structural analysis, complying with FBC–2007, prepared by Al–Farooq Corporation, dated 07/07/09, signed and sealed by Arshad Viqar, P. E.
Complies with ASTM E1300–04

2. Anchor verification calculations and structural analysis, complying with FBC–2007, prepared by Al–Farooq Corporation, dated 10/13/08, signed and sealed by Humayoun Farooq, P. E.
Complies with ASTM E1300–98/04
(Submitted under NOA No. 08-1119.08)

Jaime D. Gascon, P. E.
Chief, Product Control Division
NOA No. 09–0812.16
Expiration Date: July 01, 2014
Approval Date: November 18, 2009

NOTICE OF ACCEPTANCE: EVIDENCE SUBMITTED

C. CALCULATIONS (CONTINUED)

3. Anchor verification calculations and structural analysis, complying with FBC–2004, prepared by Al–Farooq Corporation, dated 06/14/07, signed and sealed by Humayoun Farooq, P. E.
   Complies with ASTM E1300–98/02
   (Submitted under NOA No. 07-1019.02)

D. QUALITY ASSURANCE

1. Miami–Dade Building Code Compliance Office (BCCO).

E. MATERIAL CERTIFICATIONS

1. Notice of Acceptance No. **09-0312.03** issued to E.I. DuPont DeNemours & Co., Inc. for their "**DuPont Sentry Glass® Interlayer**" dated 05/13/09, expiring on 01/14/12.
2. Notice of Acceptance No. **09-0312.02** issued to E.I. DuPont DeNemours & Co., Inc. for their "**DuPont Butacite® PVB, Interlayer**" dated 05/13/09, expiring on 12/11/10.

F. STATEMENTS

1. Statement letter of conformance and no financial interest, dated June 30, 2009, signed and sealed by Arshad Viqar, P. E.
2. Laboratory code compliance letters for Test Report No. **FTL–5739** issued by Fenestration Testing Laboratory, Inc., signed and sealed by Carlos S. Rionda, P. E.
3. Proposal issued by BCCO, dated October 28, 2008, signed by Jaime D. Gascon, P. E.
   (Submitted under NOA No. 08–1119.08)
4. Laboratory code compliance letters for Test Report No.'s **FTL–4981**, **FTL–4992**, **FTL–5108**, **FTL–5189**, **FTL–5319** and **FTL–5320** issued by Fenestration Testing Laboratory, Inc., signed and sealed by Michael S. Wenzel, P. E. and Carlos S. Rionda, P. E.
   (Submitted under NOA No. 07–1019.02)
5. Laboratory code compliance letters for Test Report No.'s **FTL–3928** and **FTL–3970**, issued by Fenestration Testing Laboratory, Inc., signed and sealed by Edmundo Largaespada, P. E.
   (Submitted under NOA No. 04–0512-02)

G. OTHERS

1. Notice of Acceptance No. **08–1119.08**, issued to R. C. Aluminum Industries, Inc. for their Series HP 3070 Aluminum Window Wall System w/ 7" Mullion – (S.M.I.), approved on 04/08/09 and expiring on 07/01/14.

Jaime D. Gascon, P. E.
Chief, Product Control Division
NOA No. 09–0812.16
Expiration Date: July 01, 2014
Approval Date: November 18, 2009

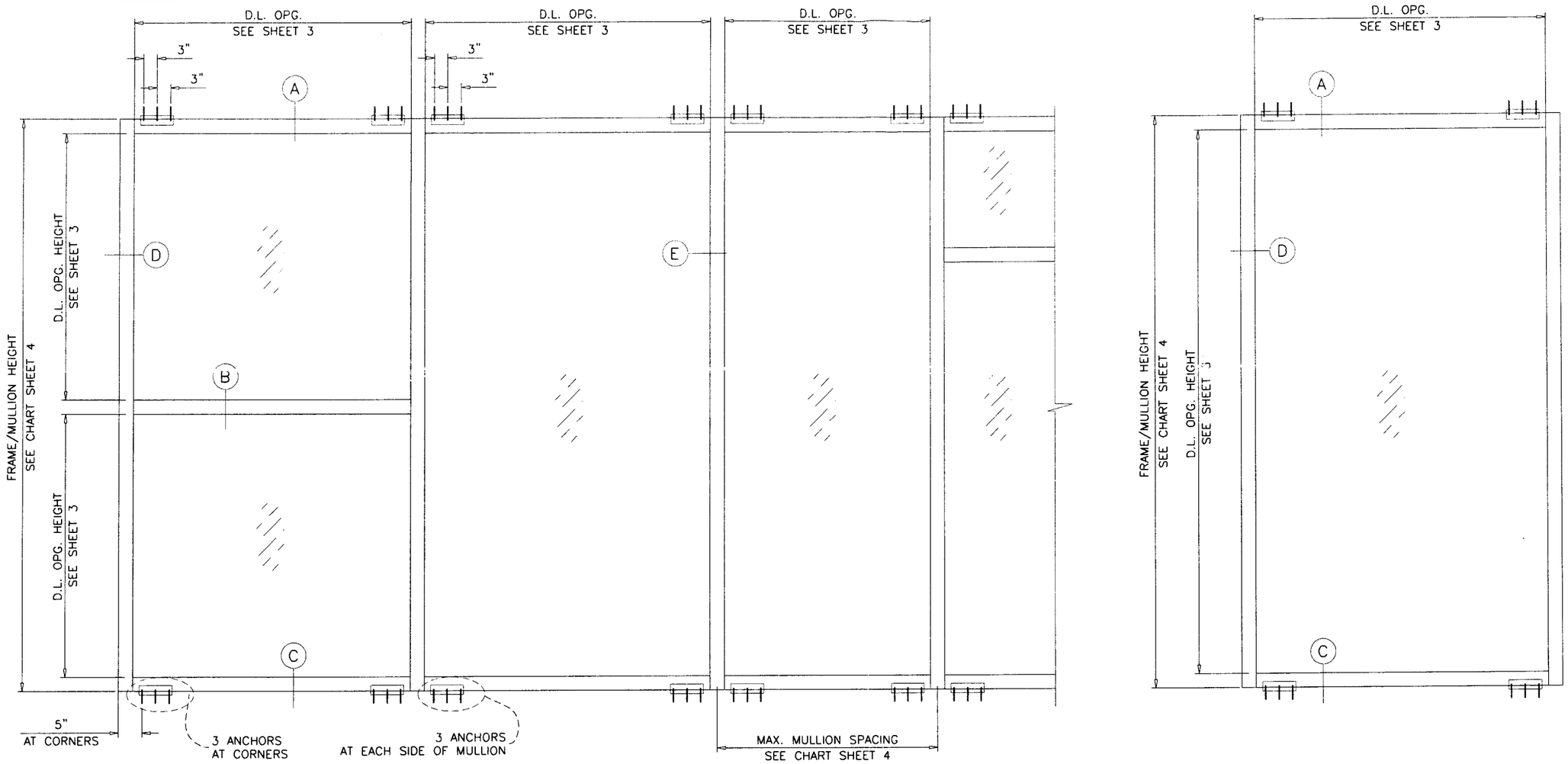

TYPICAL ELEVATIONS

HP3070 ALUM. WINDOW WALL SYSTEM (S.M.I.)

THIS SYSTEM MAY BE USED IN CONJUNCTION WITH MIAMI-DADE COUNTY APPR'D SMALL MISSILE IMPACT RESISTANT DOORS.
FOR CONNECTION DETAILS TO MULLION SEE SEPARATE DOOR NOA.

THIS PRODUCT HAS BEEN DESIGNED AND TESTED TO COMPLY WITH THE REQUIREMENTS OF THE FLORIDA BUILDING CODE 2007 EDITION INCLUDING HIGH VELOCITY HURRICANE ZONE (HVHZ).

ANCHORS SHALL BE AS LISTED, SPACED AS SHOWN ON DETAILS, ANCHORS EMBEDMENT TO BASE MATERIAL SHALL BE BEYOND WALL DRESSING OR STUCCO.

ANCHORING OR LOADING CONDITIONS NOT SHOWN IN THESE DETAILS ARE NOT PART OF THIS APPROVAL.

MATERIALS INCLUDING BUT NOT LIMITED TO STEEL/METAL SCREWS, THAT COME INTO CONTACT WITH OTHER DISSIMILAR MATERIALS SHALL MEET THE REQUIREMENTS OF 2007 FLORIDA BLDG. CODE SECTION 2003.8.4.

THIS SYSTEM IS RATED FOR SMALL MISSILE IMPACT.
MIAMI-DADE COUNTY APPROVED IMPACT RESISTANT SHUTTERS REQUIRED FOR INSTALLATIONS UP TO 30 FT. OF GRADE.
SHUTTERS NOT REQD. FOR INSTALLATIONS ABOVE 30 FT. OF GRADE.

INSTRUCTIONS:

USE CHARTS AS FOLLOWS.

STEP 1 DETERMINE DESIGN WIND LOAD REQUIREMENT BASED ON WIND VELOCITY, BLDG. HEIGHT, WIND ZONE USING APPLICABLE ASCE 7 STANDARD.

STEP 2 SEE CHARTS ON SHEET 3 FOR DESIGN LOAD CAPACITY OF DESIRED GLASS SIZE.

STEP 3 CHECK MULLION CAPACITY FOR A GIVEN SPACING AND HEIGHT USING CHARTS ON SHEET 4.
THE CAPACITY SHOULD EXCEED THE DESIGN LOAD.

STEP 4 THE LOWEST VALUE RESULTING FROM STEPS 2 AND 3 SHALL APPLY TO ENTIRE SYSTEM.

WINDOW WALL SYSTEM WITH GLASS TYPES 'A', 'D' & 'F' COMPLIES WITH REQUIREMENTS OF ANSI Z97.1.

LAMINATED GLASS
SMALL MISSILE IMPACT

Engr: ARSHAD VIQAR
CIVIL
FLA. PE # 38863
C.A.N. 3538

JUL 1 3 2009

PRODUCT REVISED
as complying with the Florida Building Code
Acceptance No. 09-0812.16
Expiration Date July 01, 2014
By
Miami Dade Product Control Division

AL-FAROOQ CORPORATION
ENGINEERS & PRODUCT DEVELOPMENT
1235 S.W. 87 AVE
MIAMI, FLORIDA 33174
TEL. (305) 264-8100 FAX. (305) 262-6978
STORE\W04-26RC

HP3070 ALUM. WINDOW WALL SYSTEM (S.M.I.)

R.C. ALUMINUM INDUSTRIES INC.
2805 N.W. 75 TH AVE.
MIAMI, FL. 33122
TEL. (305) 592-1515 FAX. (305) 592-2184

revisions:

no	date	by	description
C	11.11.05		NOTE DELETED
D	06.26.07		GENERAL REV.
E	01.16.08		REV. PER BCCO COMMENTS
F	10.08.08		UPDATED FOR 2007 FBC
G	07.09.09		NO CHANGE THIS SHEET

date: 03-23-04
scale: 1/2"=1'-0"
dr. by: HAMID
chk. by:

drowing no.
W04-26

sheet 1 of12

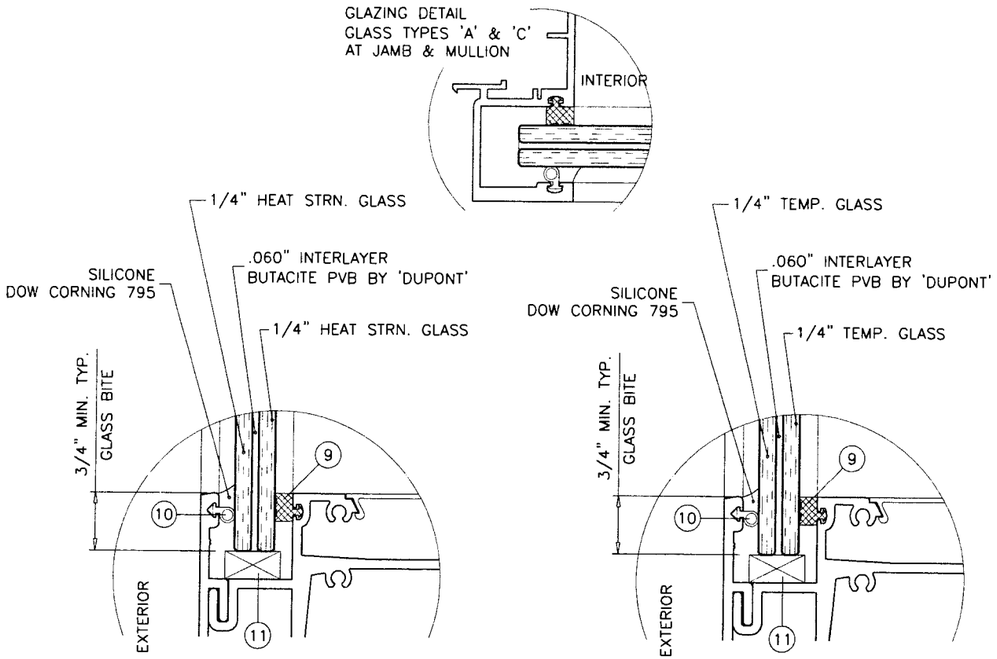

GLASS TYPE 'A'
9/16" OVERALL LAM. GLASS

GLASS TYPE 'C'
9/16" OVERALL LAM. GLASS

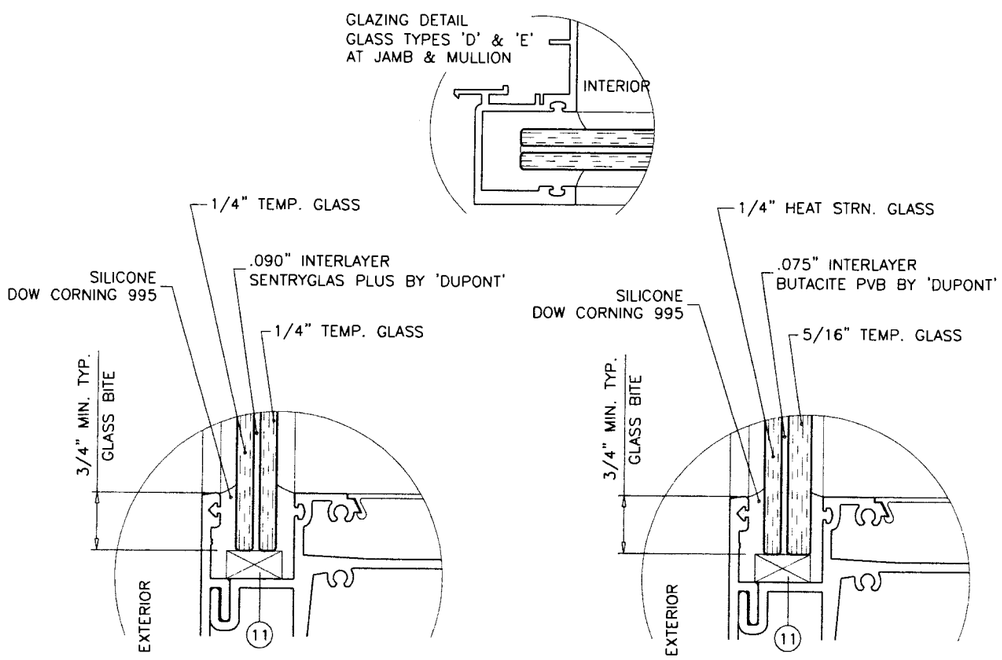

GLASS TYPE 'D'
9/16" OVERALL LAM. GLASS

GLASS TYPE 'E'
5/8" OVERALL LAM. GLASS

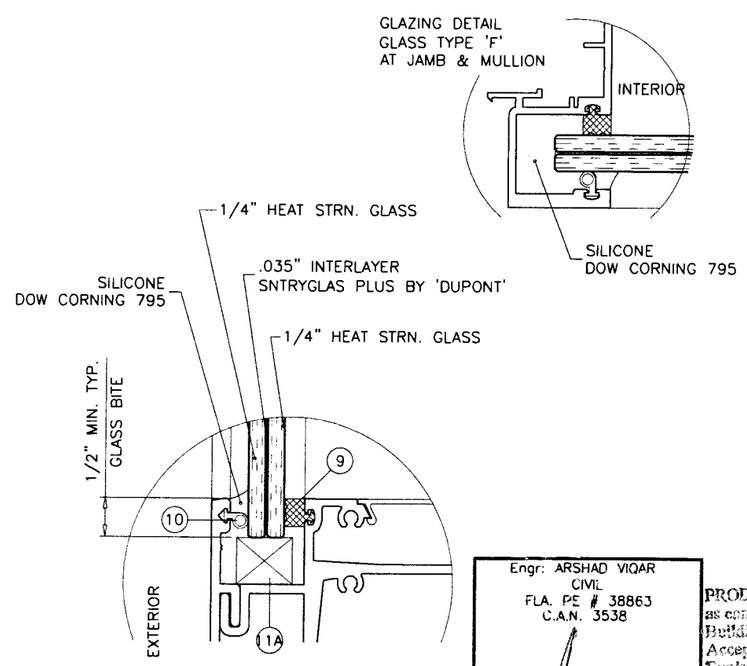

GLASS TYPE 'F'
9/16" OVERALL LAM. GLASS

GLAZING OPTIONS

ITEM NO.	PART NUMBER	QUANTITY	DESCRIPTION	MATERIAL	MANF./SUPPLIER/REMARKS
1	HP3060-051	AS REQD.	FRAME HEAD/SILL	6005-T5	–
2	FX345-006	AS REQD.	GLAZING RETAINER (HEAD/SILL)	6063-T6	–
3	FX345-005	AS REQD.	GLAZING RETAINER (HORIZONTAL)	6063-T6	–
4	HP3060-044	AS REQD.	FRAME JAMB	6063-T6	–
4A	HP3060-066	AS REQD.	CLOSED FRAME JAMB	6005-T6	–
5	HP3060-041	AS REQD.	HORIZONTAL	6063-T6	–
6	HP3060-042	AS REQD.	FEMALE MULLION	6063-T6	–
7	HP3060-043	AS REQD.	MALE MULLION	6063-T6	–
8	HP3060-011	AS REQD.	SNAP-IN COVER HEAD/SILL	6063-T6	–
9	WV-8215	AS REQD.	GLAZING GASKET	VINYL	WIBORG
10	WV-3289	AS REQD.	BULB WEATHERSTRIPPING	VINYL	WIBORG
11	–	2/ LITE	SETTING BLOCKS (3/4" X 3/8" X 4")	NEOPRENE	LOWE
11A	–	2/ LITE	SETTING BLOCKS (3/4" X 5/8" X 4")	NEOPRENE	LOWE
12	–	–	SEALANT DOW CORNING 795	SILICONE	–
13	–	–	–	–	–
14	–	AS REQD.	REINFORCING BAR (1/2" X 5")	STEEL	SILICONED IN PLACE
15	–	AS REQD.	FRAME ASSEMBLY SCREWS	–	#12 X 1-1/4" PH SMS ST/ST
16	–	AS REQD.	LEVELING SCREWS	–	1/4-20 X 3/4" HH MS ST/ST
17	–	AS REQD.	ANCHOR TUBE (2 X 3 X 1/8")	6063-T6	7" LONG
18	–	AS REQD.	FILLER TUBE	ALUMINUM	–
19	–	AS REQD.	ALUM PLATE (3 X 7 X 3/8")	ALUMINUM	–
20	–	3/ PLATE	ALUM PLATE FASTENERS	–	#14 X 1" FH SELF DRILLING SCREWS
21	HP3060-065	AS REQD.	GLAZING POCKET COVER	6063-T6	–

Engr: ARSHAD VIQAR
CIVIL
FLA. PE # 38863
C.A.N. 3538

JUL 1 8 2009

PRODUCT REVISED
as complying with the Florida
Building Code
Acceptance No. 09-0812.16
Expiration Date July 01, 2014
By
Miami Dade Product Control
Division

AL-FAROOQ CORPORATION
ENGINEERS & PRODUCT DEVELOPMENT
1235 S.W. 87 AVE
MIAMI, FLORIDA 33174
TEL. (305) 264-8100 FAX. (305) 262-6978

STORE\W04-26RC

HP3070 ALUM. WINDOW WALL SYSTEM (S.M.I.)

R.C. ALUMINUM INDUSTRIES INC.
2805 N.W. 75 TH AVE.
MIAMI, FL. 33122
TEL. (305) 592-1515 FAX. (305) 592-2184

revisions:

no	date	by	description
C	11.11.05		NO CHANGE THIS SHEET
D	06.26.07		GENERAL REV.
E	01.16.08		REV. PER BCCO COMMENTS
F	10.08.08		GLASS TYPE F ADDED
G	07.09.09		NO CHANGE THIS SHEET

date: 03-23-04
scale: 1/2" = 1"
dr. by: HAMID
chk. by:

drawing no.
W04-26

GLASS DESIGN LOAD CAPACITY – PSF

NOMINAL DIMS		GLASS TYPE 'A'	GLASS TYPE 'C'	GLASS TYPE 'D'	GLASS TYPE 'E'	GLASS TYPE 'F'
D.L.O. WIDTH	D.L.O. HEIGHT	EXT. (+) INT. (–)	EXT. (+) INT. (–)	EXT. (+) INT. (–)	EXT. (+) INT. (–)	EXT. (+) INT. (–)
24"	60"	160.0	170.0	170.0	180.0	160.0
27"		160.0	170.0	170.0	180.0	160.0
30"		160.0	170.0	170.0	180.0	160.0
33"		160.0	170.0	170.0	180.0	160.0
36"		160.0	170.0	170.0	180.0	160.0
39"		160.0	170.0	170.0	180.0	160.0
42"		160.0	170.0	170.0	180.0	160.0
45"		160.0	170.0	170.0	180.0	160.0
48"		160.0	170.0	170.0	180.0	160.0
51"		160.0	170.0	170.0	180.0	160.0
54"		160.0	170.0	170.0	180.0	160.0
57"		160.0	170.0	170.0	180.0	160.0
60"		160.0	170.0	170.0	180.0	160.0
63"		150.0	170.0	170.0	180.0	160.0
66"		150.0	–	170.0	180.0	160.0
69"		150.0	–	170.0	180.0	150.0
72"		150.0	–	170.0	180.0	150.0
24"	66"	160.0	170.0	170.0	180.0	160.0
27"		160.0	170.0	170.0	180.0	160.0
30"		160.0	170.0	170.0	180.0	160.0
33"		160.0	170.0	170.0	180.0	160.0
36"		160.0	170.0	170.0	180.0	160.0
39"		160.0	170.0	170.0	180.0	160.0
42"		160.0	170.0	170.0	180.0	160.0
45"		160.0	170.0	170.0	180.0	160.0
48"		160.0	170.0	170.0	180.0	160.0
51"		160.0	170.0	170.0	180.0	160.0
54"		160.0	170.0	170.0	180.0	160.0
57"		150.0	170.0	170.0	180.0	160.0
60"		150.0	–	170.0	180.0	160.0
63"		150.0	–	170.0	180.0	150.0
66"		150.0	–	170.0	180.0	150.0
69"		150.0	–	170.0	–	150.0
72"		147.0	–	–	–	150.0
24"	72"	160.0	170.0	170.0	180.0	160.0
27"		160.0	170.0	170.0	180.0	160.0
30"		160.0	170.0	170.0	180.0	160.0
33"		160.0	170.0	170.0	180.0	160.0
36"		160.0	170.0	170.0	180.0	160.0
39"		160.0	170.0	170.0	180.0	160.0
42"		160.0	170.0	170.0	180.0	160.0
45"		160.0	170.0	170.0	180.0	160.0
48"		160.0	170.0	170.0	180.0	160.0
51"		150.0	170.0	170.0	180.0	160.0
54"		150.0	170.0	170.0	180.0	160.0
57"		150.0	–	170.0	180.0	160.0
60"		150.0	–	170.0	180.0	150.0
63"		150.0	–	170.0	176.4	150.0
66"		147.0	–	–	–	150.0
69"		143.0	–	–	–	150.0

GLASS DESIGN LOAD CAPACITY – PSF

NOMINAL DIMS		GLASS TYPE 'A'	GLASS TYPE 'C'	GLASS TYPE 'D'	GLASS TYPE 'E'	GLASS TYPE 'F'
D.L.O. WIDTH	D.L.O. HEIGHT	EXT. (+) INT. (–)	EXT. (+) INT. (–)	EXT. (+) INT. (–)	EXT. (+) INT. (–)	EXT. (+) INT. (–)
24"	78"	160.0	170.0	170.0	180.0	160.0
27"		160.0	170.0	170.0	180.0	160.0
30"		160.0	170.0	170.0	180.0	160.0
33"		160.0	170.0	170.0	180.0	160.0
36"		160.0	170.0	170.0	180.0	160.0
39"		160.0	170.0	170.0	180.0	160.0
42"		160.0	170.0	170.0	180.0	160.0
45"		160.0	170.0	170.0	180.0	160.0
48"		150.0	170.0	170.0	180.0	160.0
51"		150.0	–	170.0	180.0	160.0
54"		150.0	–	170.0	180.0	150.0
57"		150.0	–	170.0	176.7	150.0
60"		145.0	–	–	–	150.0
63"		141.0	–	–	–	150.0
24"	84"	160.0	170.0	170.0	180.0	160.0
27"		160.0	170.0	170.0	180.0	160.0
30"		160.0	170.0	170.0	180.0	160.0
33"		160.0	170.0	170.0	180.0	160.0
36"		160.0	170.0	170.0	180.0	160.0
39"		160.0	170.0	170.0	180.0	160.0
42"		160.0	170.0	170.0	180.0	160.0
45"		160.0	170.0	170.0	180.0	160.0
48"		150.0	–	170.0	180.0	160.0
51"		150.0	–	170.0	180.0	150.0
54"		147.0	–	170.0	173.7	150.0
57"		141.0	–	–	–	150.0
24"	90"	160.0	170.0	170.0	180.0	160.0
27"		160.0	170.0	170.0	180.0	160.0
30"		160.0	170.0	170.0	180.0	160.0
33"		160.0	170.0	170.0	180.0	160.0
36"		160.0	170.0	170.0	180.0	160.0
39"		160.0	170.0	170.0	180.0	160.0
42"		150.0	170.0	170.0	180.0	160.0
45"		150.0	–	170.0	180.0	160.0
48"		150.0	–	170.0	180.0	150.0
51"		143.0	–	170.0	–	150.0
54"		137.0	–	–	–	146.4
24"	96"	160.0	170.0	170.0	180.0	160.0
27"		160.0	170.0	170.0	180.0	160.0
30"		160.0	170.0	170.0	180.0	160.0
33"		160.0	170.0	170.0	180.0	160.0
36"		160.0	170.0	170.0	180.0	160.0
39"		150.0	170.0	170.0	180.0	160.0
42"		150.0	–	170.0	180.0	160.0
45"		150.0	–	170.0	180.0	150.0
48"		142.0	–	–	–	150.0
51"		135.0	–	–	–	142.8

GLASS DESIGN LOAD CAPACITY – PSF

NOMINAL DIMS		GLASS TYPE 'A'	GLASS TYPE 'C'	GLASS TYPE 'D'	GLASS TYPE 'E'	GLASS TYPE 'F'
D.L.O. WIDTH	D.L.O. HEIGHT	EXT. (+) INT. (–)	EXT. (+) INT. (–)	EXT. (+) INT. (–)	EXT. (+) INT. (–)	EXT. (+) INT. (–)
24"	102"	160.0	170.0	170.0	180.0	160.0
27"		160.0	170.0	170.0	180.0	160.0
30"		160.0	170.0	170.0	180.0	160.0
33"		160.0	170.0	170.0	180.0	160.0
36"		150.0	170.0	170.0	180.0	160.0
39"		150.0	–	170.0	180.0	160.0
42"		150.0	–	170.0	180.0	150.0
45"		143.0	–	170.0	–	150.0
48"		134.0	–	–	–	141.8
24"	108"	160.0	170.0	170.0	180.0	160.0
27"		160.0	170.0	170.0	180.0	160.0
30"		160.0	170.0	170.0	180.0	160.0
33"		160.0	170.0	170.0	180.0	160.0
36"		150.0	170.0	170.0	180.0	160.0
39"		150.0	–	170.0	180.0	150.0
42"		147.0	–	170.0	180.0	150.0
45"		136.0	–	–	–	143.6
24"	114"	160.0	–	170.0	180.0	160.0
27"		160.0	–	170.0	180.0	160.0
30"		160.0	–	170.0	180.0	160.0
33"		150.0	–	170.0	180.0	160.0
36"		150.0	–	170.0	180.0	160.0
39"		150.0	–	170.0	180.0	150.0
42"		141.0	–	–	–	148.2
24"	120"	160.0	–	170.0	180.0	160.0
27"		160.0	–	170.0	180.0	160.0
30"		160.0	–	170.0	180.0	160.0
33"		150.0	–	170.0	180.0	160.0
36"		150.0	–	170.0	180.0	150.0
39"		150.0	–	–	–	150.0
42"		–	–	–	–	142.9
24"	126"	–	–	170.0	180.0	160.0
27"		–	–	170.0	180.0	160.0
30"		–	–	170.0	180.0	160.0
33"		–	–	170.0	180.0	150.0
36"		–	–	170.0	180.0	150.0
39"		–	–	–	–	150.0

NOTE:
GLASS CAPACITIES ON THIS SHEET ARE
BASED ON ASTM E1300–02/04 (3 SEC. GUSTS).

Engr: ARSHAD VIQAR
CIVIL
FLA. PE # 38863
C.A.N. 3538

JUL 1 3 2009

PRODUCT REVISED
as complying with the Florida
Building Code
Acceptance No 09-0812.16
Expiration Date July 01, 2014
By
Miami Dade Product Control
Division

AL-FAROOQ CORPORATION
ENGINEERS & PRODUCT DEVELOPMENT
1235 S.W. 87 AVE
MIAMI, FLORIDA 33174
TEL. (305) 264-8100 FAX. (305) 262-6978
STORE\W04–26RC

HP3070 ALUM. WINDOW WALL SYSTEM (S.M.I.)

R.C. ALUMINUM INDUSTRIES INC.
2805 N.W. 75 TH AVE.
MIAMI, FL. 33122
TEL. (305) 592–1515 FAX. (305) 592–2184

revisions:

no	date	by	description
C	11.11.05		NO CHANGE THIS SHEET
D	06.26.07		GENERAL REV.
E	01.16.08		NO CHANGE THIS SHEET
F	10.08.08		GLASS TYPE F ADDED
G	07.09.09		GLASS CHART REV.

date: 03–23–04
scale: 1/2" = 1"
dr. by: HAMID
chk. by:

drawing no.
W04–26

MULLION/JAMB DESIGN LOAD CAPACITY – PSF

NOMINAL DIMS.		JAMB 'J1' JAMB 'J2'		JAMB 'CJ1' MULLION 'M1'		JAMB 'J3'		JAMB 'CJ2' MULLION 'M2'	
WIDTH (W)	FRAME HEIGHT	EXT.(+)	INT.(–)	EXT.(+)	INT.(–)	EXT.(+)	INT.(–)	EXT.(+)	INT.(–)
30"	66"	150.0	160.0	150.0	170.0	150.0	160.0	150.0	180.0
36"		150.0	160.0	150.0	170.0	150.0	160.0	150.0	180.0
42"		150.0	160.0	150.0	170.0	150.0	160.0	150.0	180.0
45"		150.0	160.0	150.0	170.0	150.0	160.0	150.0	180.0
48"		150.0	160.0	150.0	170.0	150.0	160.0	150.0	180.0
54"		150.0	160.0	150.0	170.0	150.0	160.0	150.0	180.0
60"		150.0	160.0	150.0	170.0	150.0	160.0	150.0	180.0
66"		150.0	160.0	150.0	170.0	150.0	160.0	150.0	180.0
72"		150.0	160.0	150.0	160.0	150.0	160.0	150.0	170.0
30"	72"	150.0	160.0	150.0	170.0	150.0	160.0	150.0	180.0
36"		150.0	160.0	150.0	170.0	150.0	160.0	150.0	180.0
42"		150.0	160.0	150.0	170.0	150.0	160.0	150.0	180.0
45"		150.0	160.0	150.0	170.0	150.0	160.0	150.0	180.0
48"		150.0	160.0	150.0	170.0	150.0	160.0	150.0	180.0
54"		150.0	160.0	150.0	170.0	150.0	160.0	150.0	180.0
60"		150.0	160.0	150.0	170.0	150.0	160.0	150.0	180.0
66"		150.0	160.0	150.0	160.0	150.0	160.0	150.0	180.0
72"		150.0	160.0	150.0	160.0	150.0	160.0	150.0	170.0
30"	78"	150.0	160.0	150.0	170.0	150.0	160.0	150.0	180.0
36"		150.0	160.0	150.0	170.0	150.0	160.0	150.0	180.0
42"		150.0	160.0	150.0	170.0	150.0	160.0	150.0	180.0
45"		150.0	160.0	150.0	170.0	150.0	160.0	150.0	180.0
48"		150.0	160.0	150.0	170.0	150.0	160.0	150.0	180.0
54"		150.0	160.0	150.0	170.0	150.0	160.0	150.0	180.0
60"		150.0	160.0	150.0	160.0	150.0	160.0	150.0	180.0
66"		150.0	160.0	150.0	160.0	150.0	160.0	150.0	180.0
72"		150.0	150.0	150.0	150.0	150.0	160.0	150.0	160.0
30"	84"	150.0	160.0	150.0	170.0	150.0	160.0	150.0	180.0
36"		150.0	160.0	150.0	170.0	150.0	160.0	150.0	180.0
42"		150.0	160.0	150.0	170.0	150.0	160.0	150.0	180.0
45"		150.0	160.0	150.0	170.0	150.0	160.0	150.0	180.0
48"		150.0	160.0	150.0	170.0	150.0	160.0	150.0	180.0
54"		150.0	160.0	150.0	170.0	150.0	160.0	150.0	180.0
60"		150.0	160.0	150.0	160.0	150.0	160.0	150.0	180.0
66"		150.0	150.0	150.0	150.0	150.0	160.0	150.0	160.0
72"		–	–	–	–	100.0	138.0	100.0	138.0
30"	90"	150.0	160.0	150.0	170.0	150.0	160.0	150.0	180.0
36"		150.0	160.0	150.0	170.0	150.0	160.0	150.0	180.0
42"		150.0	160.0	150.0	170.0	150.0	160.0	150.0	180.0
45"		150.0	160.0	150.0	170.0	150.0	160.0	150.0	180.0
48"		150.0	160.0	150.0	170.0	150.0	160.0	150.0	180.0
54"		150.0	160.0	150.0	160.0	150.0	160.0	150.0	180.0
60"		150.0	150.0	150.0	150.0	150.0	160.0	150.0	160.0
66"		–	–	–	–	120.0	160.0	120.0	160.0
72"		–	–	–	–	90.0	110.0	90.0	110.0
30"	96"	150.0	160.0	150.0	170.0	150.0	160.0	150.0	180.0
36"		150.0	160.0	150.0	170.0	150.0	160.0	150.0	180.0
42"		150.0	160.0	150.0	170.0	150.0	160.0	150.0	180.0
45"		150.0	160.0	150.0	170.0	150.0	160.0	150.0	180.0
48"		150.0	160.0	150.0	160.0	150.0	160.0	150.0	180.0
54"		150.0	160.0	150.0	160.0	150.0	160.0	150.0	180.0
60"		–	–	–	–	120.0	160.0	150.0	160.0
66"		–	–	–	–	90.0	110.0	90.0	110.0
72"		–	–	–	–	90.0	110.0	90.0	110.0

MULLION/JAMB DESIGN LOAD CAPACITY – PSF

NOMINAL DIMS.		JAMB 'J1' JAMB 'J2'		JAMB 'CJ1' MULLION 'M1'		JAMB 'J3'		JAMB 'CJ2' MULLION 'M2'	
WIDTH (W)	FRAME HEIGHT	EXT.(+)	INT.(–)	EXT.(+)	INT.(–)	EXT.(+)	INT.(–)	EXT.(+)	INT.(–)
30"	102"	150.0	160.0	150.0	170.0	150.0	160.0	150.0	180.0
36"		150.0	160.0	150.0	170.0	150.0	160.0	150.0	180.0
42"		150.0	160.0	150.0	170.0	150.0	160.0	150.0	180.0
45"		150.0	160.0	150.0	160.0	150.0	160.0	150.0	180.0
48"		150.0	160.0	150.0	160.0	150.0	160.0	150.0	180.0
54"		150.0	150.0	150.0	150.0	150.0	160.0	150.0	160.0
60"		–	–	–	–	90.0	110.0	90.0	110.0
66"		–	–	–	–	90.0	110.0	90.0	110.0
30"	108"	150.0	160.0	150.0	160.0	150.0	160.0	150.0	180.0
36"		150.0	160.0	150.0	160.0	150.0	160.0	150.0	180.0
42"		150.0	160.0	150.0	160.0	150.0	160.0	150.0	180.0
45"		150.0	160.0	150.0	160.0	150.0	160.0	150.0	180.0
48"		150.0	160.0	150.0	160.0	150.0	160.0	150.0	180.0
54"		–	–	–	–	120.0	160.0	120.0	160.0
60"		–	–	–	–	90.0	110.0	90.0	110.0
66"		–	–	–	–	90.0	110.0	90.0	110.0
30"	114"	150.0	160.0	150.0	160.0	150.0	160.0	150.0	180.0
36"		150.0	160.0	150.0	160.0	150.0	160.0	150.0	180.0
42"		150.0	160.0	150.0	160.0	150.0	160.0	150.0	180.0
45"		150.0	160.0	150.0	160.0	150.0	160.0	150.0	180.0
48"		150.0	150.0	150.0	150.0	150.0	160.0	150.0	160.0
54"		–	–	–	–	90.0	110.0	90.0	110.0
60"		–	–	–	–	90.0	110.0	90.0	110.0
30"	120"	150.0	160.0	150.0	160.0	150.0	160.0	150.0	180.0
36"		150.0	160.0	150.0	160.0	150.0	160.0	150.0	180.0
42"		150.0	160.0	150.0	160.0	150.0	160.0	150.0	180.0
45"		150.0	150.0	150.0	150.0	150.0	160.0	150.0	160.0
48"		–	–	–	–	120.0	160.0	150.0	160.0
54"		–	–	–	–	90.0	110.0	90.0	110.0
30"	126"	–	–	–	–	120.0	160.0	120.0	180.0
36"		–	–	–	–	120.0	160.0	120.0	180.0
42"		–	–	–	–	120.0	160.0	120.0	160.0
45"		–	–	–	–	120.0	160.0	120.0	160.0
48"		–	–	–	–	100.0	138.0	100.0	138.0
54"		–	–	–	–	90.0	110.0	90.0	110.0
30"	132"	–	–	–	–	120.0	160.0	120.0	180.0
36"		–	–	–	–	120.0	160.0	120.0	180.0
42"		–	–	–	–	120.0	160.0	120.0	160.0
45"		–	–	–	–	120.0	160.0	120.0	160.0
48"		–	–	–	–	90.0	110.0	90.0	110.0
54"		–	–	–	–	90.0	110.0	90.0	110.0
30"	138"	–	–	–	–	100.0	138.0	100.0	138.0
36"		–	–	–	–	100.0	138.0	100.0	138.0
42"		–	–	–	–	100.0	138.0	100.0	138.0
45"		–	–	–	–	90.0	110.0	90.0	110.0
48"		–	–	–	–	90.0	110.0	90.0	110.0
30"	144"	–	–	–	–	100.0	138.0	100.0	138.0
36"		–	–	–	–	100.0	138.0	100.0	138.0
42"		–	–	–	–	100.0	138.0	100.0	138.0
45"		–	–	–	–	90.0	110.0	90.0	110.0
48"		–	–	–	–	90.0	110.0	90.0	110.0
30"	147"	–	–	–	–	90.0	110.0	90.0	110.0
36"		–	–	–	–	90.0	110.0	90.0	110.0
42"		–	–	–	–	90.0	110.0	90.0	110.0
45"		–	–	–	–	90.0	110.0	90.0	110.0
48"		–	–	–	–	90.0	110.0	90.0	110.0

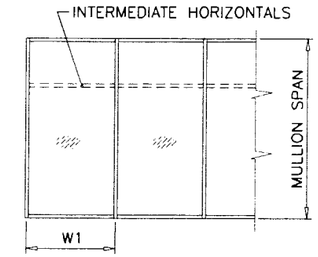

WIDTH (W) = W1
AT FRAME JAMB

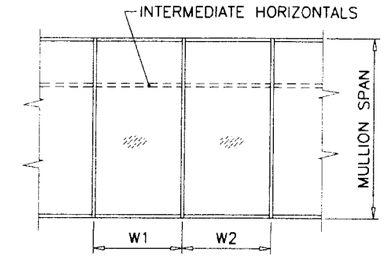

WIDTH (W) = $\frac{W1 + W2}{2}$
AT FRAME MULLION

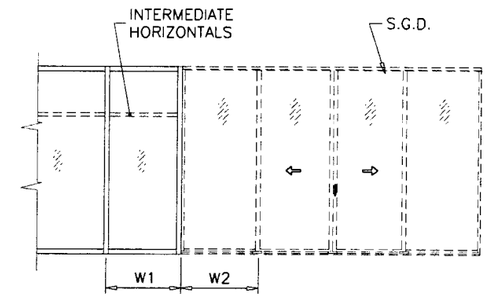

WIDTH (W) = $\frac{W1 + W2}{2}$
AT CLOSED JAMB

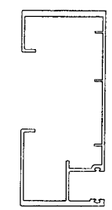

JAMB 'J1'

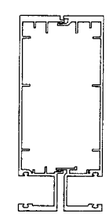

JAMB 'J2'

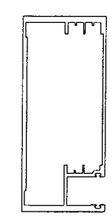

CLOSED JAMB 'CJ1'

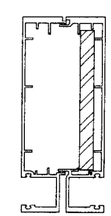

JAMB 'J3'

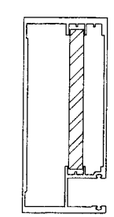

CLOSED JAMB 'CJ2'

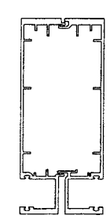

MULLION 'M1'

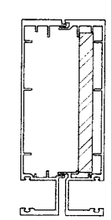

MULLION 'M2'

Engr: ARSHAD VIQAR
CIVIL
FLA. PE # 38863
C.A.N. 3538

JUL 3 8 2009

PRODUCT REVISED
as complying with the Florida
Building Code
Acceptance No. 09-0812.16
Expiration Date July 01, 2014
By
Miami Dade Product Control
Division

AL-FAROOQ CORPORATION
ENGINEERS & PRODUCT DEVELOPMENT
1235 S.W. 87 AVE
MIAMI, FLORIDA 33174
TEL. (305) 264-8100 FAX. (305) 262-6978
STORE\W04-26RC

HP3070 ALUM. WINDOW WALL SYSTEM (S.M.I.)

R.C. ALUMINUM INDUSTRIES INC.
2805 N.W. 75 TH AVE.
MIAMI, FL. 33122
TEL. (305) 592-1515 FAX. (305) 592-2184

revisions:

no	date	by	description
C	11.11.05		NO CHANGE THIS SHEET
D	06.26.07		GENERAL REV.
E	01.16.08		NO CHANGE THIS SHEET
F	10.08.08		NO CHANGE THIS SHEET
G	07.09.09		MULLION CHART REV.

date: 03-23-04
scale: –
dr. by: HAMID
chk. by:

drawing no.
W04-26

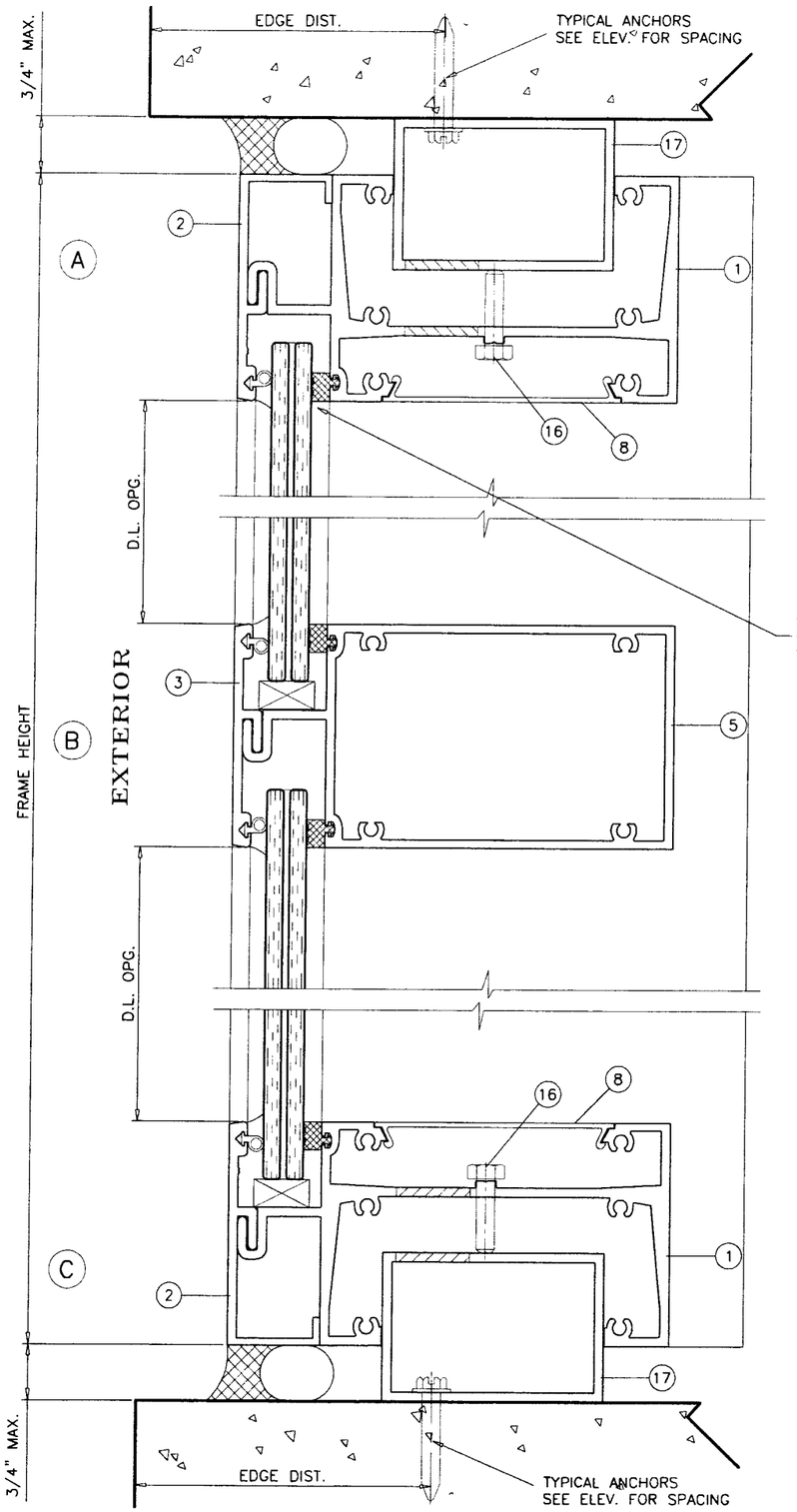

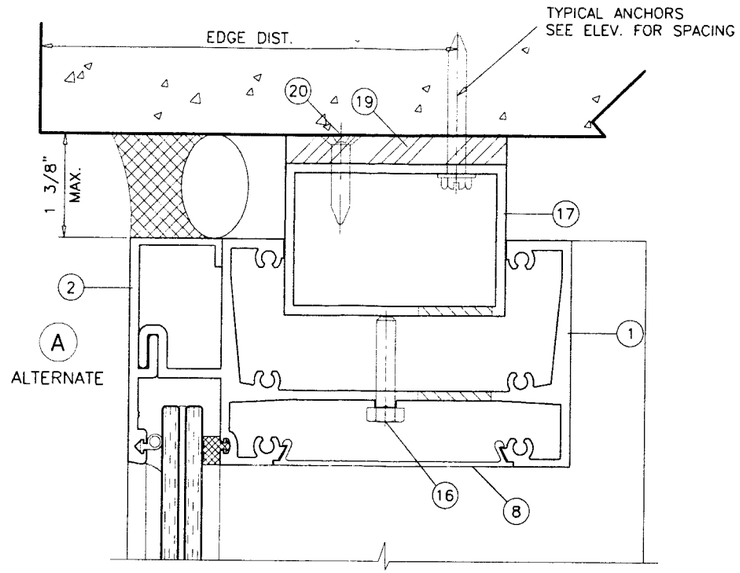

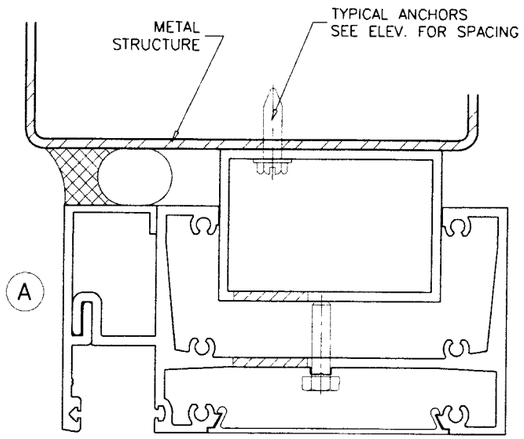

TYPICAL ANCHORS: SEE ELEV. FOR SPACING

1/4" HILTI KWIK-CON II (Fu=163 KSI, Fy=157 KSI)

DIRECTLY INTO CONCRETE (4000 PSI MIN)
1-5/8" MIN. EMBED INTO CONCRETE

1/4" DIA. SELF DRILLING SCREWS (Fu=92 KSI, Fy=120 KSI)
INTO METAL STRUCTURES

STEEL : 1/8" THK. MIN. (Fy = 36 KSI MIN.)
ALUMINUM : 1/8" THK. MIN. (6063-T6 MIN.)
(STEEL IN CONTACT WITH ALUMINUM TO BE PLATED OR PAINTED)

ANCHOR EDGE DISTANCES

INTO CONCRETE = 2-1/2" MIN.
INTO METAL STRUCTURE = 3/4" MIN.

SEALANTS:

ALL FRAME CORNERS AND MULLION SEAMS SEALED
WITH SILICONE.

METAL STRUCTURES NOT BY RC ALUMINUM
MUST SUPPORT LOADS IMPOSED BY GLAZING SYSTEM AND
TRANSFER THEM TO THE BUILDING STRUCTURE.

Engr: ARSHAD VIQAR
CIVIL
FLA. PE # 38863
C.A.N. 3538

JUL 1 3 2009

PRODUCT REVISED
as complying with the Florida
Building Code
Acceptance No 09-0812.16
Expiration Date July 01, 2014
By
Miami Dade Product Control
Division

AL-FAROOQ CORPORATION
ENGINEERS & PRODUCT DEVELOPMENT
1235 S.W. 87 AVE
MIAMI, FLORIDA 33174
TEL. (305) 264-8100 FAX. (305) 262-6978

STORE\W04-26RC

HP3070 ALUM. WINDOW WALL SYSTEM (S.M.I.)

R.C. ALUMINUM INDUSTRIES INC.
2805 N.W. 75 TH AVE.
MIAMI, FL. 33122
TEL. (305) 592-1515 FAX. (305) 592-2184

revisions:

no	date	by	description
C	11.11.05		EDGE DIST. ADDED
D	06.26.07		GENERAL REV.
E	01.16.08		REV. PER BCCO COMMENTS
F	10.08.08		UPDATED FOR 2007 FBC
G	07.09.09		ANCHORS REV.

date: 03-23-04
scale: 1/2" = 1"
dr. by: HAMID
chk. by:

drawing no.
W04-26

sheet 5 of 12

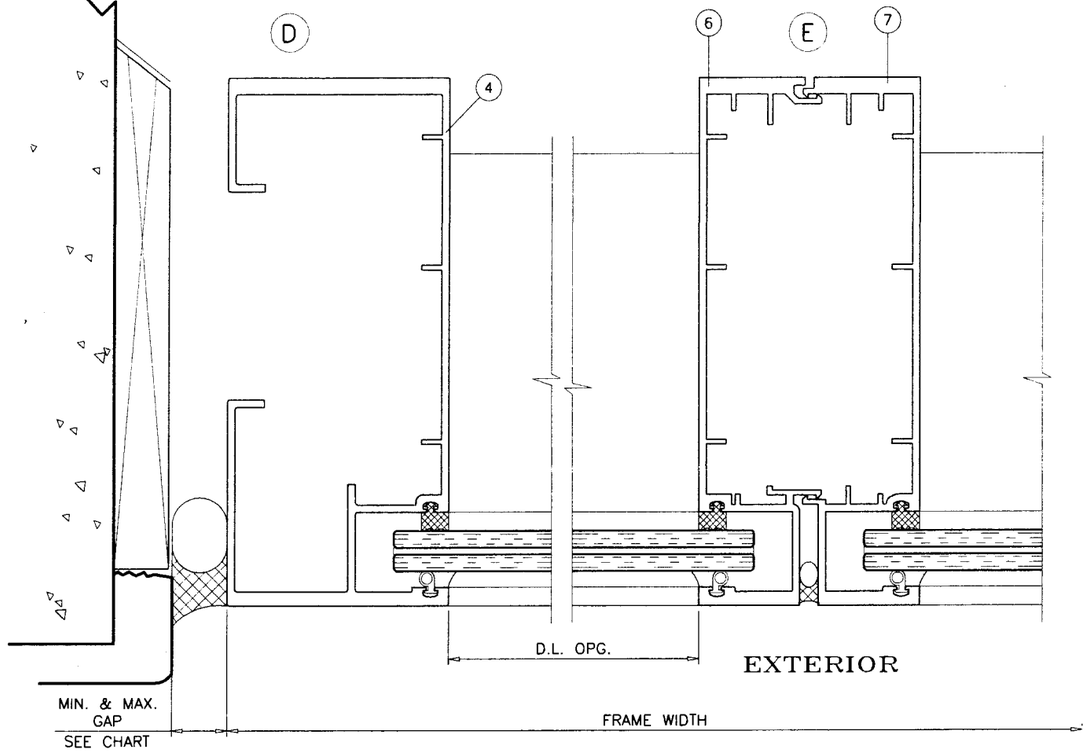

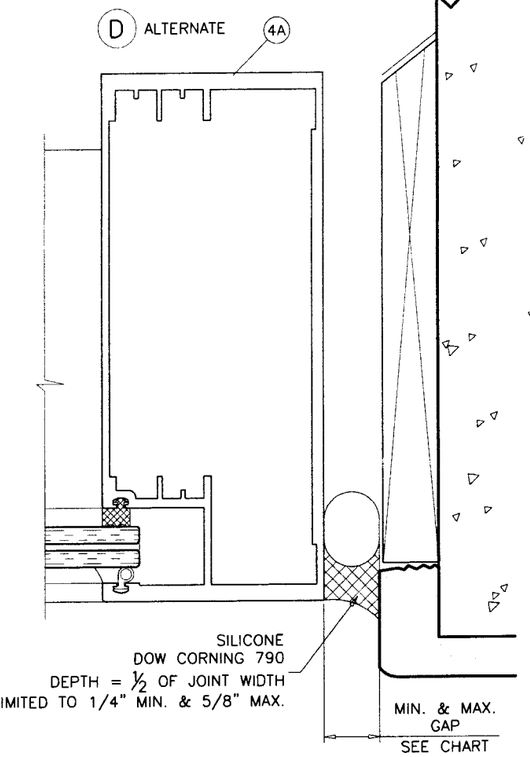

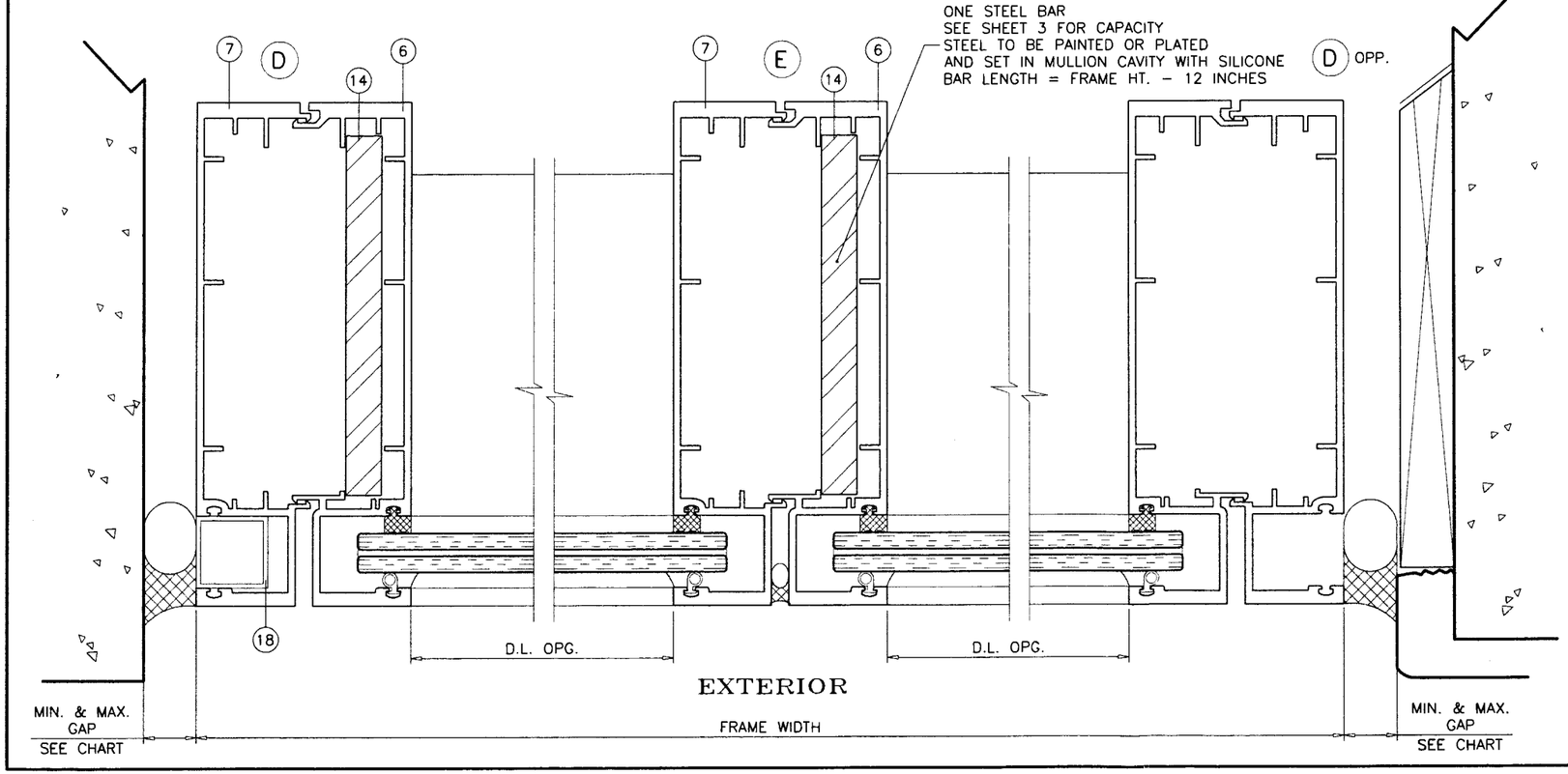

MAX. FRAME HEIGHT	GAP	
	MIN.	MAX.
72"	1/4"	5/8"
84"	3/8"	5/8"
96"	3/8"	5/8"
108"	3/8"	5/8"
120"	1/2"	5/8"
132"	1/2"	5/8"
148"	1/2"	5/8"

Engr: ARSHAD VIQAR
CIVIL
FLA. PE # 38663
C.A.N. 3538

JUL 1 3 2009

PRODUCT REVISED
as complying with the Florida
Building Code
Acceptance No 09-0812.16
Expiration Date July 01, 2014
By
Miami Dade Product Control
Division

AL-FAROOQ CORPORATION
ENGINEERS & PRODUCT DEVELOPMENT
1235 S.W. 87 AVE
MIAMI, FLORIDA 33174
TEL. (305) 264-8100 FAX. (305) 262-6978

STORE\W04-26RC

HP3070 ALUM. WINDOW WALL SYSTEM (S.M.I.)

R.C. ALUMINUM INDUSTRIES INC.
2805 N.W. 75 TH AVE.
MIAMI, FL. 33122
TEL. (305) 592-1515 FAX. (305) 592-2184

revisions:

no	date	by	description
C	11.11.05		NO CHANGE THIS SHEET
D	06.26.07		GENERAL REV.
E	01.16.08		REV. PER BCCO COMMENTS
F	10.08.08		NO CHANGE THIS SHEET
G	07.09.09		SILICONE NOTE ADDED

date: 03-23-04
scale: 1/2" = 1"
dr. by: HAMID
chk. by:

drawing no.
W04-26

sheet 6 of 12

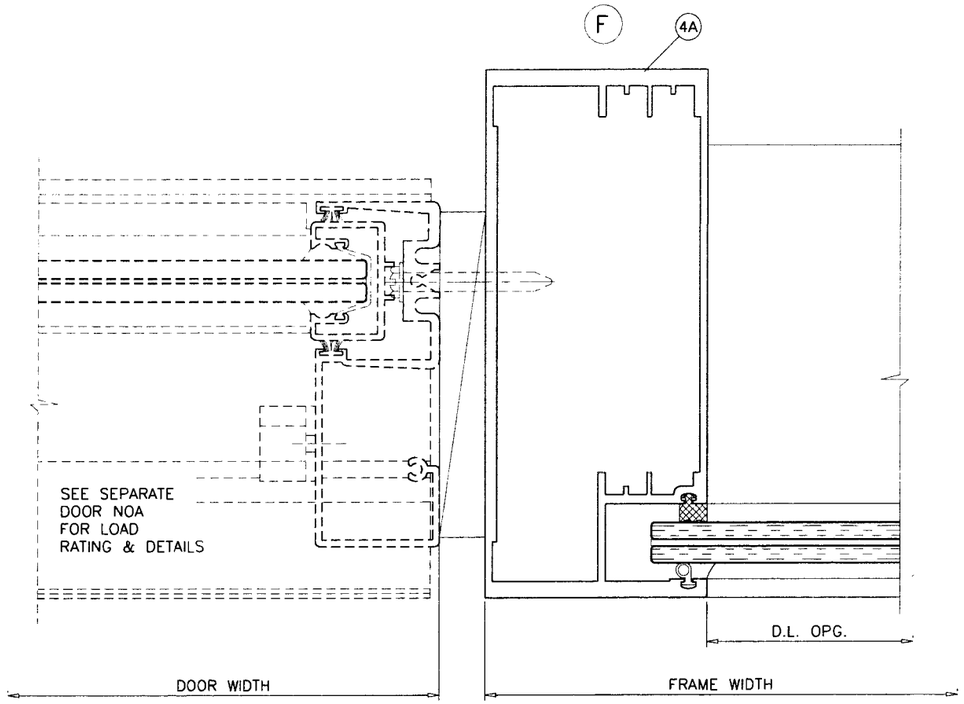

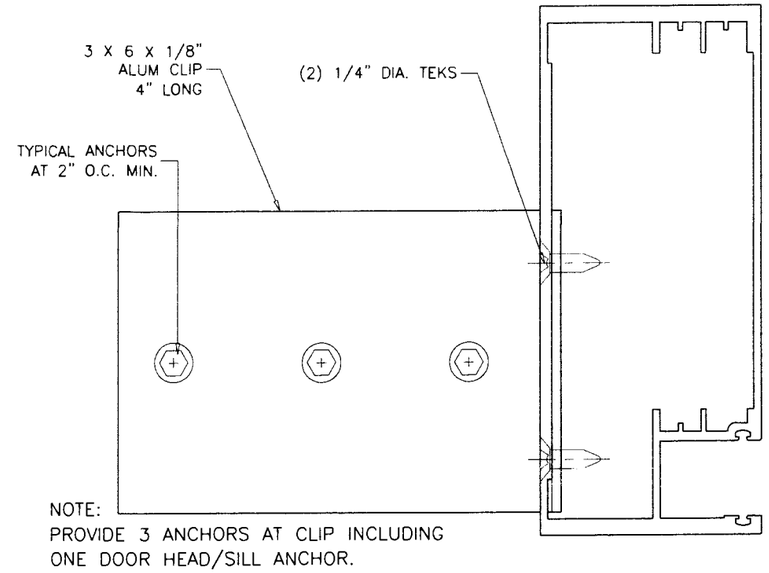

NOTE:
PROVIDE 3 ANCHORS AT CLIP INCLUDING
ONE DOOR HEAD/SILL ANCHOR.

CLOSED JAMB INSTALLATION AT HEAD & SILL

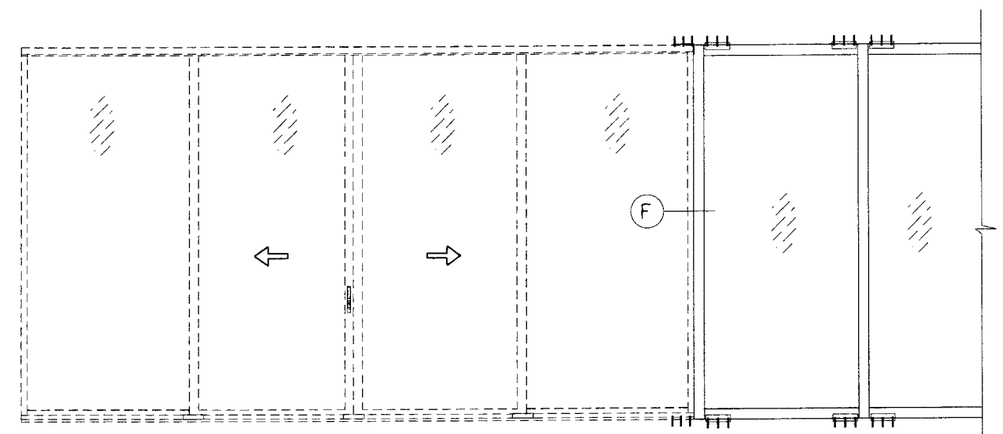

SEE SEPARATE NOA FOR DESIGN LOAD
CAPACITY OF DOORS AND DOOR ANCHORS.

LOWER VALUES FROM DOORS NOA
OR WINDOW WALL SYSTEM CAPACITY CHARTS
WILL APPLY TO ENTIRE SYSTEM.

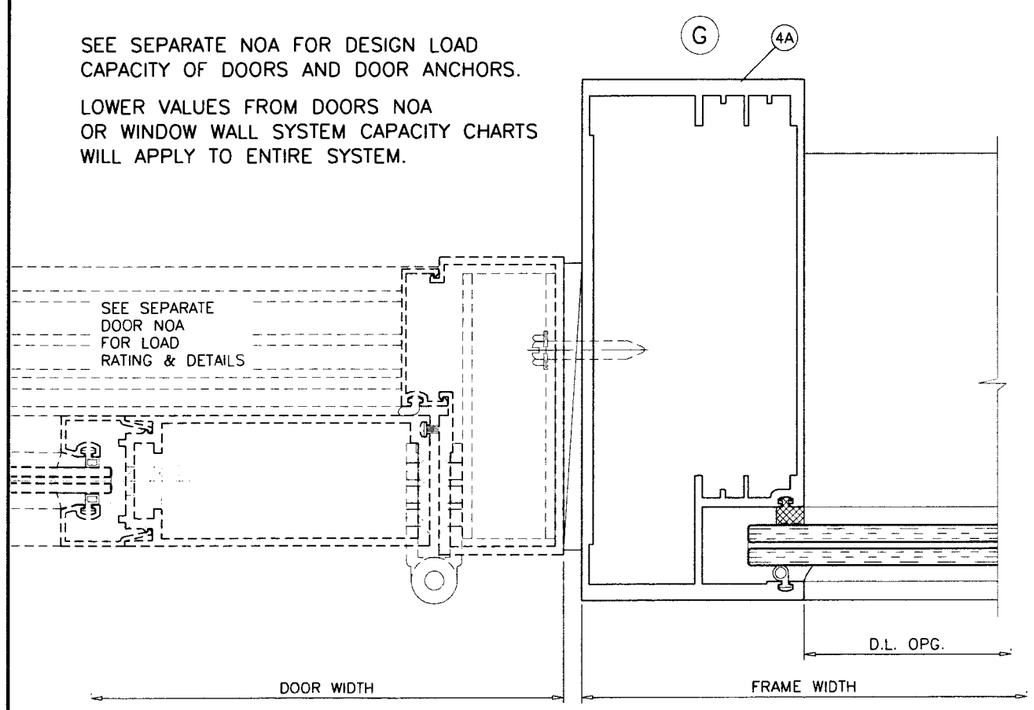

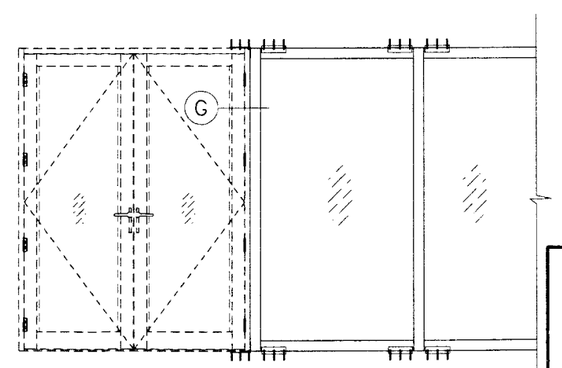

Engr: ARSHAD VIQAR
CIVIL
FLA. PE # 38863
C.A.N. 3538

JUL 1 8 2009

PRODUCT REVISED
as complying with the Florida
Building Code
Acceptance No 09-0812.16
Expiration Date July 01, 2014
By
Miami Dade Product Control
Division

AL-FAROOQ CORPORATION
ENGINEERS & PRODUCT DEVELOPMENT
1235 S.W. 87 AVE
MIAMI, FLORIDA 33174
TEL. (305) 264-8100 FAX. (305) 262-6978

STORE\W04-26RC

HP3070 ALUM. WINDOW WALL SYSTEM (S.M.I.)

R.C. ALUMINUM INDUSTRIES INC.
2805 N.W. 75 TH AVE.
MIAMI, FL. 33122
TEL. (305) 592-1515 FAX. (305) 592-2184

revisions:

no	date	by	description
C	11.11.05		NO CHANGE THIS SHEET
D	06.26.07		GENERAL REV.
E	01.16.08		NO CHANGE THIS SHEET
F	10.08.08		NO CHANGE THIS SHEET
G	07.09.09		NO CHANGE THIS SHEET

date: 03-23-04
scale: 1/2" = 1"
dr. by: HAMID
chk. by:

drawing no.
W04-26

sheet 7 of 12

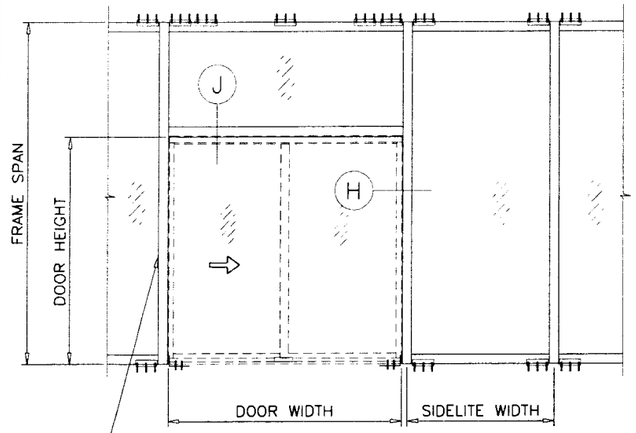

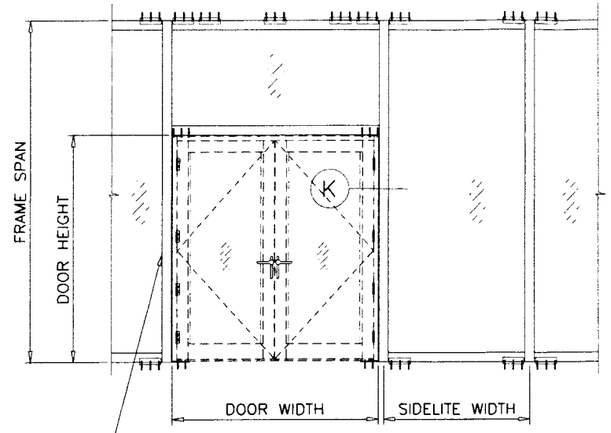

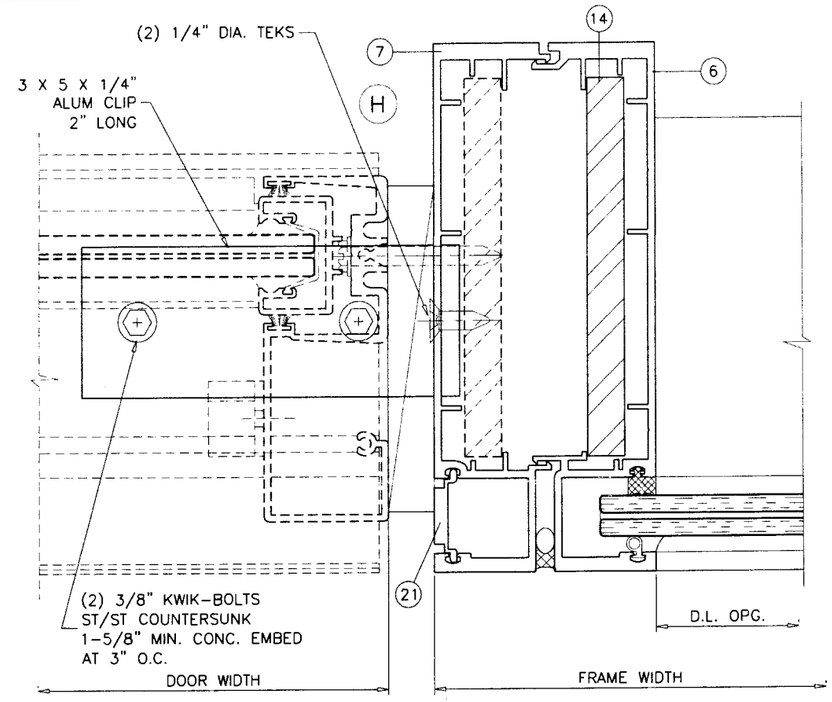

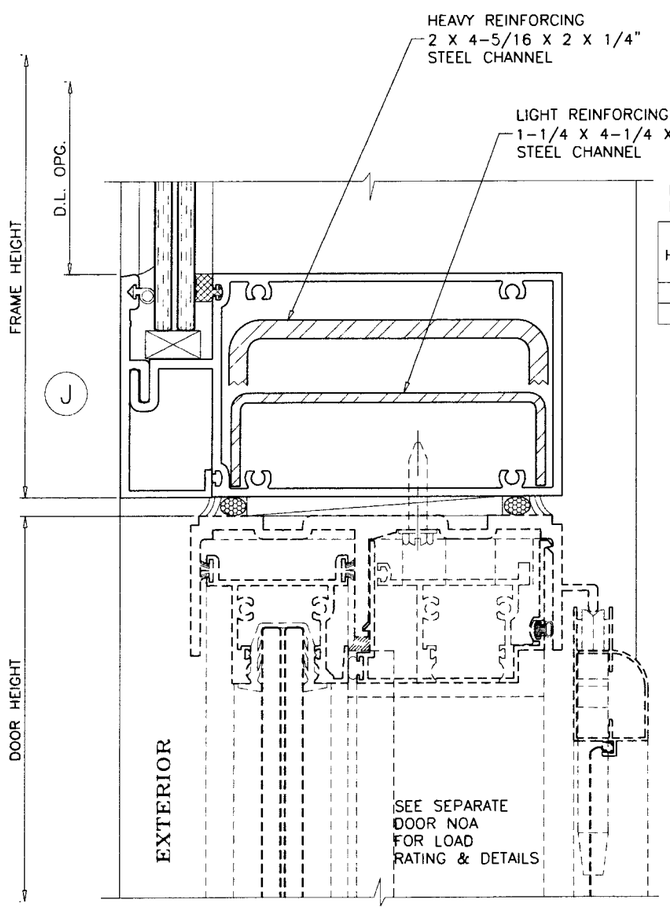

LIMIT MAX. DESIGN LOADS
FOR HORIZONTAL AS FOLLOWS

HORIZ. SPAN MAX.	LOAD CAPACITY – PSF	
	LIGHT REINFORCING	HEAVY REINFORCING
96"	85.0	131.0
72"	131.0	131.0

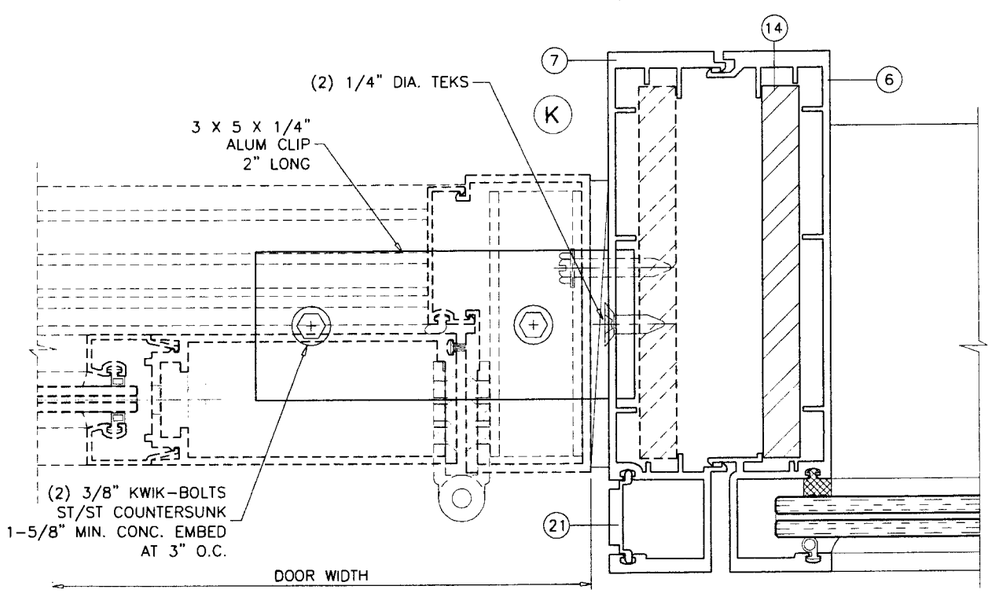

DOOR MULLION INSTALLATION AT SILL

SEE SEPARATE NOA FOR DESIGN LOAD CAPACITY OF DOORS AND DOOR ANCHORS.

LOWER VALUES FROM DOORS NOA OR WINDOW WALL SYSTEM CAPACITY CHARTS WILL APPLY TO ENTIRE SYSTEM.

Eng.: ARSHAD VIQAR
C/ML
FLA. PE # 38863
C.A.N. 3538

JUL 1 3 2009

PRODUCT REVISED
as complying with the Florida
Building Code
Acceptance No 09-0812.16
Expiration Date July 01 2014
By
Miami Dade Product Control
Division

AL-FAROOQ CORPORATION
ENGINEERS & PRODUCT DEVELOPMENT
1235 S.W. 87 AVE
MIAMI, FLORIDA 33174
TEL. (305) 264-8100 FAX. (305) 262-6978
STORE\W04-26RC

HP3070 ALUM. WINDOW WALL SYSTEM (S.M.I.)

R.C. ALUMINUM INDUSTRIES INC.
2805 N.W. 75 TH AVE.
MIAMI, FL. 33122
TEL. (305) 592-1515 FAX. (305) 592-2184

revisions:

no	date	by	description
E	01.16.08		NEW SHEET ADDED
F	10.08.08		NO CHANGE THIS SHEET
G	07.09.09		NO CHANGE THIS SHEET

date: 03-23-04
scale: 1/2" = 1"
dr. by: HAMID
chk. by:

drawing no.
W04-26

DOOR MULLION LOAD CAPACITY

NOMINAL DIMS.				1 STL. BAR	2 STL. BARS
DOOR WIDTH W1	SIDELITE WIDTH W2	DOOR HEIGHT A	FRAME SPAN L	EXT. (+) INT. (-)	EXT. (+) INT. (-)
72"	30"	120"	132"	131.0	131.0
	36"			131.0	131.0
	42"			131.0	131.0
	46"			131.0	131.0
	48"			131.0	131.0
	54"			131.0	131.0
	60"			131.0	131.0
	72"			122.6	131.0
84"	30"			131.0	131.0
	36"			131.0	131.0
	42"			131.0	131.0
	46"			131.0	131.0
	48"			131.0	131.0
	54"			131.0	131.0
	60"			127.9	131.0
96"	30"			131.0	131.0
	36"			131.0	131.0
	42"			131.0	131.0
	46"			131.0	131.0
	48"			131.0	131.0
	54"			126.6	131.0
72"	30"	120"	144"	131.0	131.0
	36"			131.0	131.0
	42"			129.7	131.0
	46"			124.4	131.0
	48"			121.9	131.0
	54"			115.0	131.0
	60"			108.8	131.0
84"	30"			131.0	131.0
	36"			126.7	131.0
	42"			119.3	131.0
	46"			114.8	131.0
	48"			112.7	131.0
	54"			106.8	130.6
96"	30"			123.9	131.0
	36"			116.8	131.0
	42"			110.5	131.0
	46"			106.6	130.4

DOOR MULLION LOAD CAPACITY

NOMINAL DIMS.				1 STL. BAR	2 STL. BARS
DOOR WIDTH W1	SIDELITE WIDTH W2	DOOR HEIGHT A	FRAME SPAN L	EXT. (+) INT. (-)	EXT. (+) INT. (-)
72"	30"	114"	120"	131.0	131.0
	36"			131.0	131.0
	42"			131.0	131.0
	46"			131.0	131.0
	48"			131.0	131.0
	54"			131.0	131.0
	60"			131.0	131.0
	72"			131.0	131.0
84"	30"			131.0	131.0
	36"			131.0	131.0
	42"			131.0	131.0
	46"			131.0	131.0
	48"			131.0	131.0
	54"			131.0	131.0
	60"			131.0	131.0
	72"			131.0	131.0
96"	30"			131.0	131.0
	36"			131.0	131.0
	42"			131.0	131.0
	46"			131.0	131.0
	48"			131.0	131.0
	54"			131.0	131.0
	60"			131.0	131.0
	72"			127.8	127.9
72"	30"	114"	132"	131.0	131.0
	36"			131.0	131.0
	42"			131.0	131.0
	46"			131.0	131.0
	48"			131.0	131.0
	54"			131.0	131.0
	60"			131.0	131.0
	72"			119.2	131.0
84"	30"			131.0	131.0
	36"			131.0	131.0
	42"			131.0	131.0
	46"			131.0	131.0
	48"			131.0	131.0
	54"			130.2	131.0
	60"			123.5	131.0
96"	30"			131.0	131.0
	36"			131.0	131.0
	42"			131.0	131.0
	46"			130.5	131.0
	48"			128.2	131.0
	54"			121.7	131.0
72"	30"	114"	144"	131.0	131.0
	36"			131.0	131.0
	42"			125.3	131.0
	46"			120.4	131.0
	48"			118.0	131.0
	54"			111.6	131.0
	60"			105.8	129.4
84"	30"			129.6	131.0
	36"			121.9	131.0
	42"			115.0	131.0
	46"			110.8	131.0
	48"			108.9	131.0
	54"			103.3	126.4
96"	30"			118.5	131.0
	36"			112.0	131.0
	42"			106.2	130.0
	46"			102.7	125.6

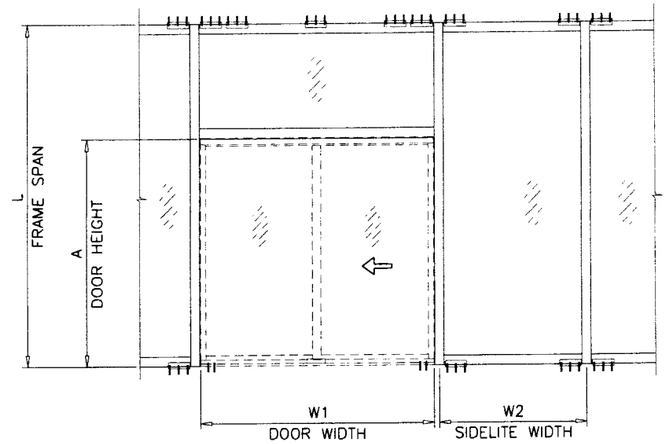

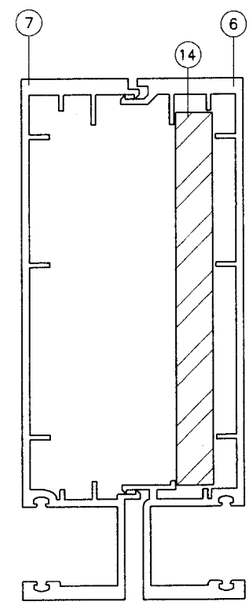

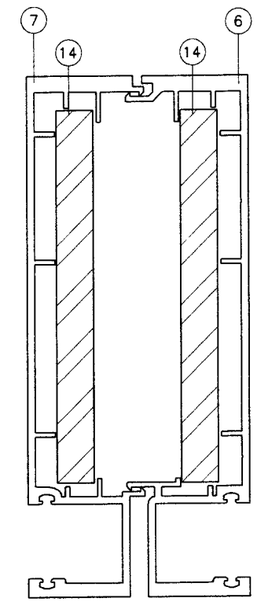

Engr: ARSHAD VIQAR
CIVIL
FLA. PE # 38863
C.A.N. 3538

JUL 1 3 2009

PRODUCT REVISED
as complying with the Florida
Building Code
Acceptance No 09-0812.16
Expiration Date July 01, 2014
By
Miami Dade Product Control
Division

AL-FAROOQ CORPORATION
ENGINEERS & PRODUCT DEVELOPMENT
1235 S.W. 87 AVE
MIAMI, FLORIDA 33174
TEL. (305) 264-8100 FAX. (305) 262-6978

STORE\W04-26RC

HP3070 ALUM. WINDOW WALL SYSTEM (S.M.I.)

R.C. ALUMINUM INDUSTRIES INC.
2805 N.W. 75 TH AVE.
MIAMI, FL. 33122
TEL. (305) 592-1515 FAX. (305) 592-2184

revisions:

no	date	by	description
E	01.16.08		NEW SHEET ADDED
F	10.08.08		NO CHANGE THIS SHEET
G	07.09.09		NO CHANGE THIS SHEET

date: 03-23-04
scale: 1/2" = 1"
dr. by: HAMID
chk. by:

drawing no.
W04-26

DOOR MULLION LOAD CAPACITY

NOMINAL DIMS.				1 STL. BAR	2 STL. BARS
DOOR WIDTH W1	SIDELITE WIDTH W2	DOOR HEIGHT A	FRAME SPAN L	EXT. (+) INT. (−)	EXT. (+) INT. (−)
72"	30"	108"	120"	131.0	131.0
	36"			131.0	131.0
	42"			131.0	131.0
	46"			131.0	131.0
	48"			131.0	131.0
	54"			131.0	131.0
	60"			131.0	131.0
	72"			131.0	131.0
84"	30"			131.0	131.0
	36"			131.0	131.0
	42"			131.0	131.0
	46"			131.0	131.0
	48"			131.0	131.0
	54"			131.0	131.0
	60"			131.0	131.0
	72"			131.0	131.0
96"	30"			131.0	131.0
	36"			131.0	131.0
	42"			131.0	131.0
	46"			131.0	131.0
	48"			131.0	131.0
	54"			131.0	131.0
	60"			131.0	131.0
	72"			129.7	129.7
72"	30"	108"	132"	131.0	131.0
	36"			131.0	131.0
	42"			131.0	131.0
	46"			131.0	131.0
	48"			131.0	131.0
	54"			131.0	131.0
	60"			128.2	131.0
	72"			115.9	131.0
84"	30"			131.0	131.0
	36"			131.0	131.0
	42"			131.0	131.0
	46"			131.0	131.0
	48"			131.0	131.0
	54"			125.6	131.0
	60"			119.4	131.0
96"	30"			131.0	131.0
	36"			131.0	131.0
	42"			129.6	131.0
	46"			125.1	131.0
	48"			123.0	131.0
	54"			117.1	131.0
72"	30"	108"	144"	131.0	131.0
	36"			128.8	131.0
	42"			121.2	131.0
	46"			116.6	131.0
	48"			114.4	131.0
	54"			108.3	131.0
	60"			102.9	125.8
84"	30"			124.3	131.0
	36"			117.2	131.0
	42"			110.9	131.0
	46"			107.0	130.9
	48"			105.2	128.7
	54"			100.1	122.4
96"	30"			113.5	131.0
	36"			107.6	131.0
	42"			102.2	125.0
	46"			98.9	121.0

DOOR MULLION LOAD CAPACITY

NOMINAL DIMS.				1 STL. BAR	2 STL. BARS
DOOR WIDTH W1	SIDELITE WIDTH W2	DOOR HEIGHT A	FRAME SPAN L	EXT. (+) INT. (−)	EXT. (+) INT. (−)
72"	30"	102"	108"	131.0	131.0
	36"			131.0	131.0
	42"			131.0	131.0
	46"			131.0	131.0
	48"			131.0	131.0
	54"			131.0	131.0
	60"			131.0	131.0
	72"			131.0	131.0
84"	30"			131.0	131.0
	36"			131.0	131.0
	42"			131.0	131.0
	46"			131.0	131.0
	48"			131.0	131.0
	54"			131.0	131.0
	60"			131.0	131.0
	72"			131.0	131.0
96"	30"			131.0	131.0
	36"			131.0	131.0
	42"			131.0	131.0
	46"			131.0	131.0
	48"			131.0	131.0
	54"			131.0	131.0
	60"			131.0	131.0
	72"			131.0	131.0
72"	30"	102"	120"	131.0	131.0
	36"			131.0	131.0
	42"			131.0	131.0
	46"			131.0	131.0
	48"			131.0	131.0
	54"			131.0	131.0
	60"			131.0	131.0
	72"			131.0	131.0
84"	30"			131.0	131.0
	36"			131.0	131.0
	42"			131.0	131.0
	46"			131.0	131.0
	48"			131.0	131.0
	54"			131.0	131.0
	60"			131.0	131.0
	72"			131.0	131.0
96"	30"			131.0	131.0
	36"			131.0	131.0
	42"			131.0	131.0
	46"			131.0	131.0
	48"			131.0	131.0
	54"			131.0	131.0
	60"			131.0	131.0
	72"			126.7	131.0

DOOR MULLION LOAD CAPACITY

NOMINAL DIMS.				1 STL. BAR	2 STL. BARS
DOOR WIDTH W1	SIDELITE WIDTH W2	DOOR HEIGHT A	FRAME SPAN L	EXT. (+) INT. (−)	EXT. (+) INT. (−)
72"	30"	102"	132"	131.0	131.0
	36"			131.0	131.0
	42"			131.0	131.0
	46"			131.0	131.0
	48"			131.0	131.0
	54"			131.0	131.0
	60"			124.3	131.0
	72"			112.7	131.0
84"	30"			131.0	131.0
	36"			131.0	131.0
	42"			131.0	131.0
	46"			129.8	131.0
	48"			127.6	131.0
	54"			121.2	131.0
	60"			115.4	131.0
96"	30"			131.0	131.0
	36"			130.9	131.0
	42"			124.2	131.0
	46"			120.1	131.0
	48"			118.2	131.0
	54"			112.7	131.0
72"	30"	102"	144"	131.0	131.0
	36"			124.3	131.0
	42"			117.2	131.0
	46"			112.9	131.0
	48"			110.9	131.0
	54"			105.2	128.7
	60"			100.1	122.4
84"	30"			119.4	131.0
	36"			112.9	131.0
	42"			107.0	130.9
	46"			103.5	126.5
	48"			101.7	124.4
	54"			96.9	118.6
96"	30"			108.7	131.0
	36"			103.4	126.4
	42"			98.4	120.4
	46"			95.4	116.7

Engr: ARSHAD VIQAR
CIVIL
FLA. PE # 38863
C.A.N. 3538

JUL 1 3 2009

PRODUCT APPROVAL
as complying with the Florida
Building Code
Acceptance No. 09-0812.16
Expiration Date July 01, 2014
By
Miami Dade Product Control
Division

AL-FAROOQ CORPORATION
ENGINEERS & PRODUCT DEVELOPMENT
1235 S.W. 87 AVE
MIAMI, FLORIDA 33174
TEL. (305) 264-8100 FAX. (305) 262-6978

STORE\W04-26RC

HP3070 ALUM. WINDOW WALL SYSTEM (S.M.I.)

R.C. ALUMINUM INDUSTRIES INC.
2805 N.W. 75 TH AVE.
MIAMI, FL. 33122
TEL. (305) 592-1515 FAX. (305) 592-2184

revisions:

no	date	by	description
E	01.16.08		NEW SHEET ADDED
F	10.08.08		NO CHANGE THIS SHEET
G	07.09.09		NO CHANGE THIS SHEET

date: 03-23-04
scale: 1/2" = 1"
dr. by: HAMID
chk. by:

drawing no.
W04-26

DOOR MULLION LOAD CAPACITY

NOMINAL DIMS.				1 STL. BAR	2 STL. BARS
DOOR WIDTH W1	SIDELITE WIDTH W2	DOOR HEIGHT A	FRAME SPAN L	EXT. (+) INT. (−)	EXT. (+) INT. (−)
72"	30"	96"	108"	131.0	131.0
	36"			131.0	131.0
	42"			131.0	131.0
	46"			131.0	131.0
	48"			131.0	131.0
	54"			131.0	131.0
	60"			131.0	131.0
	72"			131.0	131.0
84"	30"			131.0	131.0
	36"			131.0	131.0
	42"			131.0	131.0
	46"			131.0	131.0
	48"			131.0	131.0
	54"			131.0	131.0
	60"			131.0	131.0
	72"			131.0	131.0
96"	30"			131.0	131.0
	36"			131.0	131.0
	42"			131.0	131.0
	46"			131.0	131.0
	48"			131.0	131.0
	54"			131.0	131.0
	60"			131.0	131.0
	72"			131.0	131.0
72"	30"	96"	120"	131.0	131.0
	36"			131.0	131.0
	42"			131.0	131.0
	46"			131.0	131.0
	48"			131.0	131.0
	54"			131.0	131.0
	60"			131.0	131.0
	72"			131.0	131.0
84"	30"			131.0	131.0
	36"			131.0	131.0
	42"			131.0	131.0
	46"			131.0	131.0
	48"			131.0	131.0
	54"			131.0	131.0
	60"			131.0	131.0
	72"			129.8	131.0
96"	30"			131.0	131.0
	36"			131.0	131.0
	42"			131.0	131.0
	46"			131.0	131.0
	48"			131.0	131.0
	54"			131.0	131.0
	60"			131.0	131.0
	72"			122.1	131.0

DOOR MULLION LOAD CAPACITY

NOMINAL DIMS.				1 STL. BAR	2 STL. BARS
DOOR WIDTH W1	SIDELITE WIDTH W2	DOOR HEIGHT A	FRAME SPAN L	EXT. (+) INT. (−)	EXT. (+) INT. (−)
72"	30"	96"	132"	131.0	131.0
	36"			131.0	131.0
	42"			131.0	131.0
	46"			131.0	131.0
	48"			131.0	131.0
	54"			126.9	131.0
	60"			120.6	131.0
	72"			109.7	131.0
84"	30"			131.0	131.0
	36"			131.0	131.0
	42"			129.5	131.0
	46"			125.0	131.0
	48"			122.9	131.0
	54"			117.0	131.0
	60"			111.7	131.0
96"	30"			131.0	131.0
	36"			125.2	131.0
	42"			119.2	131.0
	46"			115.4	131.0
	48"			113.6	131.0
	54"			108.6	131.0
72"	30"	96"	144"	127.5	131.0
	36"			120.1	131.0
	42"			113.5	131.0
	46"			109.5	131.0
	48"			107.6	131.0
	54"			102.2	125.0
	60"			97.4	119.1
84"	30"			114.7	131.0
	36"			108.7	131.0
	42"			103.4	126.4
	46"			100.0	122.3
	48"			98.4	120.4
	54"			93.9	114.9
96"	30"			104.3	127.6
	36"			99.4	121.6
	42"			94.8	116.0
	46"			92.1	112.6

Engr: ARSHAD VIQAR
CIVIL
FLA. PE # 38863
C.A.N. 3538

JUL 1 3 2009

PRODUCT REVISED
as complying with the Florida
Building Code
Acceptance No 09-0812.16
Expiration Date July 01, 2014
By
Miami Dade Product Control
Division

AL-FAROOQ CORPORATION
ENGINEERS & PRODUCT DEVELOPMENT
1235 S.W. 87 AVE
MIAMI, FLORIDA 33174
TEL. (305) 264-8100 FAX. (305) 262-6978

STORE\W04-26RC

HP3070 ALUM. WINDOW WALL SYSTEM (S.M.I.)

R.C. ALUMINUM INDUSTRIES INC.
2805 N.W. 75 TH AVE.
MIAMI, FL. 33122
TEL. (305) 592-1515 FAX. (305) 592-2184

revisions:

no	date	by	description
E	01.16.08		NEW SHEET ADDED
F	10.08.08		NO CHANGE THIS SHEET
G	07.09.09		NO CHANGE THIS SHEET

date: 03-23-04
scale: 1/2" = 1"
dr. by: HAMID
chk. by:

drawing no.
W04-26

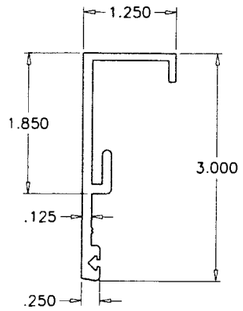

(2) GLAZING RETAINER HEAD/SILL

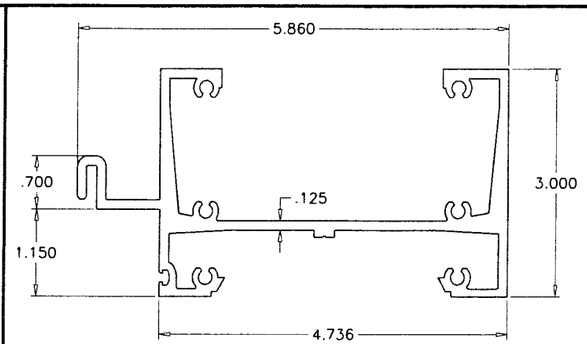

(1) FRAME HEAD/SILL

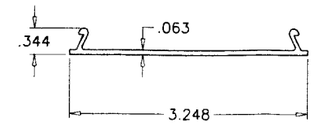

(8) COVER HEAD/SILL

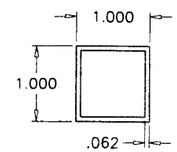

(18) FILLER TUBE

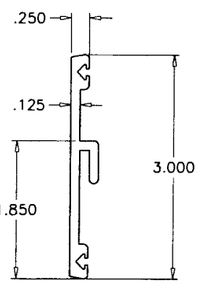

(3) GLAZING RETAINER HORIZONTAL

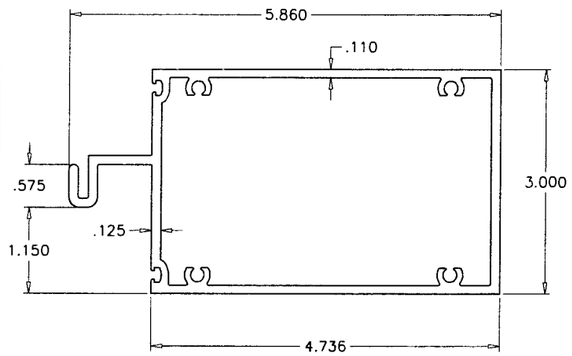

(5) HORIZONTAL

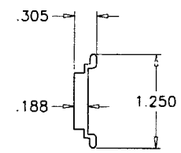

(21) GLAZING POCKET COVER

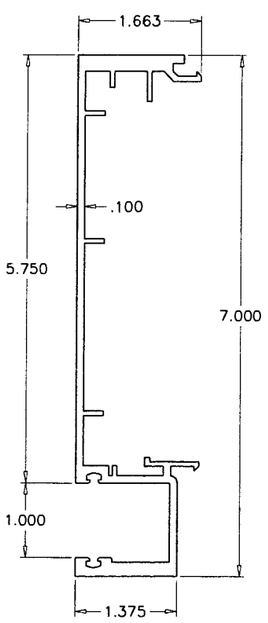

(7) MALE MULLION

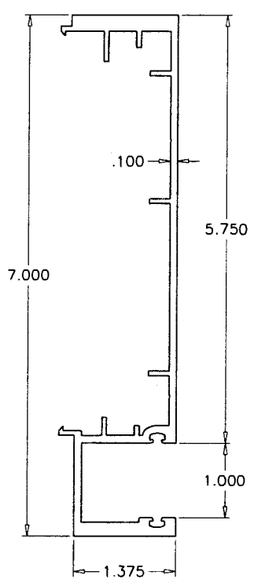

(6) FEMALE MULLION

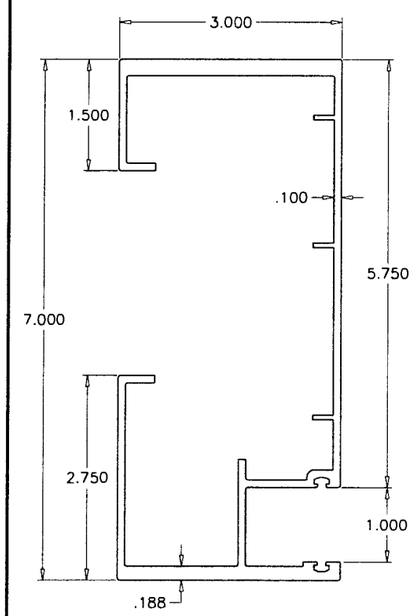

(4) FRAME JAMB

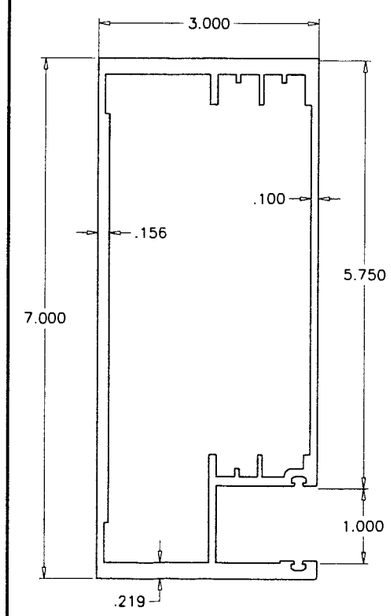

(4A) CLOSED FRAME JAMB

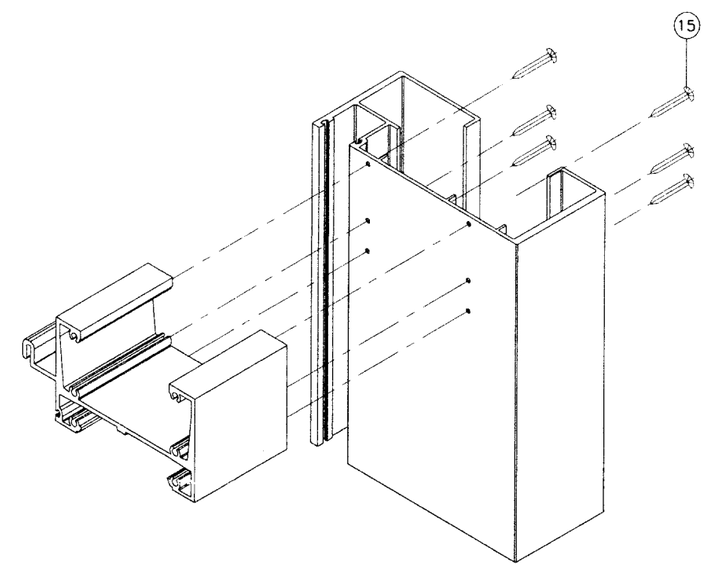

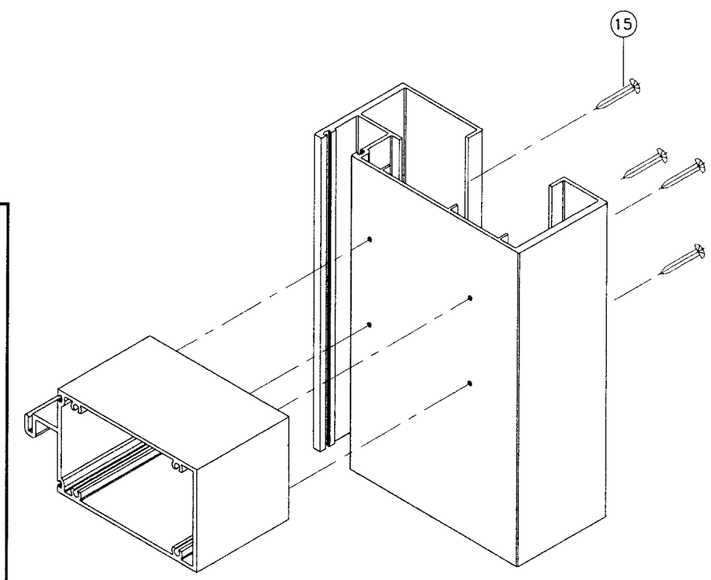

FRAME CORNER

Engr: ARSHAD VIQAR
CIVIL
FLA. PE # 38863
C.A.N. 3538

JUL 1 8 2009

PRODUCT REVISED
as complying with the Florida
Building Code
Acceptance No 09-0812.16
Expiration Date July 01, 2014
By
Miami Dade Product Control
Division

AL-FAROOQ CORPORATION
ENGINEERS & PRODUCT DEVELOPMENT
1235 S.W. 87 AVE
MIAMI, FLORIDA 33174
TEL. (305) 264-8100 FAX. (305) 262-6978
STORE\W04-26RC

HP3070 ALUM. WINDOW WALL SYSTEM (S.M.I.)

R.C. ALUMINUM INDUSTRIES INC.
2805 N.W. 75 TH AVE.
MIAMI, FL. 33122
TEL. (305) 592-1515 FAX. (305) 592-2184

revisions:

no	date	by	description
C	11.11.05		NO CHANGE THIS SHEET
D	06.26.07		GENERAL REV.
E	01.16.08		NO CHANGE THIS SHEET
F	10.08.08		NO CHANGE THIS SHEET
G	07.09.09		NO CHANGE THIS SHEET

date: 03-23-04
scale: 1/2" = 1"
dr. by: HAMID
chk. by:

drawing no.
W04-26

sheet 12 of 12