MIAMI-DADE COUNTY
BUILDING CODE COMPLIANCE OFFICE (BCCO)
PRODUCT CONTROL DIVISION

MIAMI-DADE COUNTY, FLORIDA
METRO-DADE FLAGLER BUILDING
140 WEST FLAGLER STREET, SUITE 1603
MIAMI, FLORIDA 33130-1563
(305) 375-2901 FAX (305) 372-6339
www.miamidade.gov/buildingcode

NOTICE OF ACCEPTANCE (NOA)

The Cookson Company
2417 S. 50th Avenue
Phoenix, AZ 85043

SCOPE: This NOA is being issued under the applicable rules and regulations governing the use of construction materials. The documentation submitted has been reviewed by Miami-Dade County Product Control Division and accepted by the Board of Rules and Appeals (BORA) to be used in Miami Dade County and other areas where allowed by the Authority Having Jurisdiction (AHJ).

This NOA shall not be valid after the expiration date stated below. The Miami-Dade County Product Control Division (In Miami Dade County) and/or the AHJ (in areas other than Miami Dade County) reserve the right to have this product or material tested for quality assurance purposes. If this product or material fails to perform in the accepted manner, the manufacturer will incur the expense of such testing and the AHJ may immediately revoke, modify, or suspend the use of such product or material within their jurisdiction. BORA reserves the right to revoke this acceptance, if it is determined by Miami-Dade County Product Control Division that this product or material fails to meet the requirements of the applicable building code.

This product is approved as described herein, and has been designed to comply with the Florida Building Code, including the High Velocity Hurricane Zone.

DESCRIPTION: 14'-4" Wide Steel Roll-up Door

APPROVAL DOCUMENT: Drawing No. **FBC144-52-DC**, titled "Dade County Wind Door 14'-4" Wide", sheets 1 through 3 of 3, dated 07/12/04 and 07/14/05, with revision 3 dated 06/02/09, prepared by Cookson Rolling Doors, signed and sealed by Joseph H. Dixon, Jr., P.E., bearing the Miami-Dade County Product Control revision stamp with the Notice of Acceptance number and expiration date by the Miami-Dade County Product Control Division.

MISSILE IMPACT RATING: Large and Small Missile Impact Resistant

LABELING: Each unit shall bear a permanent label with the manufacturer's name or logo, city, state and following statement: "Miami-Dade County Product Control Approved", unless otherwise noted herein.

RENEWAL of this NOA shall be considered after a renewal application has been filed and there has been no change in the applicable building code negatively affecting the performance of this product.

TERMINATION of this NOA will occur after the expiration date or if there has been a revision or change in the materials, use, and/or manufacture of the product or process. Misuse of this NOA as an endorsement of any product, for sales, advertising or any other purposes shall automatically terminate this NOA. Failure to comply with any section of this NOA shall be cause for termination and removal of NOA.

ADVERTISEMENT: The NOA number preceded by the words Miami-Dade County, Florida, and followed by the expiration date may be displayed in advertising literature. If any portion of the NOA is displayed, then it shall be done in its entirety.

INSPECTION: A copy of this entire NOA shall be provided to the user by the manufacturer or its distributors and shall be available for inspection at the job site at the request of the Building Official.

This NOA **renews and revises NOA # 04-0402.02** and consists of this page 1 and evidence page E-1, as well as approval document mentioned above.

The submitted documentation was reviewed by **Carlos M. Utrera, P.E.**

MIAMI-DADE COUNTY APPROVED

09/10/09

NOA No. 09-0813.06
Expiration Date: August 26, 2014
Approval Date: September 30, 2009

NOTICE OF ACCEPTANCE: EVIDENCE SUBMITTED

A. DRAWINGS

1. Drawing No. **FBC144-52-DC**, titled "Dade County Wind Door 14'-4" Wide", sheets 1 through 3 of 3, dated 07/12/04 and 07/14/05, with revision 3 dated 06/02/09, prepared by Cookson Rolling Doors, signed and sealed by Joseph H. Dixon, Jr., P.E.

B. TESTS

1. Test report on evaluation of painted or coated specimens subject to corrosive environment per ASTM D 1654 of painted G40 and 60 and G90 specimens, prepared by ETC Laboratories, Test Report No. ETC-04-977-15284.0, signed Joseph L. Doldan, P.E.

   "Submitted under NOA # 04-0402.02"

2. Test report on Large Missile Impact Test per TAS 201, Cyclic Wind Pressure Test per TAS 203, Uniform Static Air Pressure Test per TAS 202 and Standard Tensile Test per ASTM E8 on Series/Model, FC Slat # 5 Roll-Up Door 14'-4" wide, prepared by Architectural Testing, Inc., report No.03-48466.01, dated 03/14/04, signed and sealed by J. A. Reed, PE.

C. CALCULATIONS

1. Calculations for Attachment of Guide Angles to Steel or Masonry Jamb for Steel Slat Rolling Doors, prepared by Joseph H. Dixon Jr., dated 07/01 and 07/17/05, signed and sealed by Joseph H. Dixon Jr., P.E.

D. QUALITY ASSURANCE

1. Miami Dade Building Code Compliance Office (BCCO)

E. MATERIAL CERTIFICATIONS

1. None.

F. STATEMENTS

1. Statement letter of code conformance, dated 06/24/09, signed and sealed by Joseph H. Dixon, Jr., P.E.
2. Statement letter of no financial interest, dated 06/24/09, signed and sealed by Joseph H. Dixon, Jr., P.E.

09/10/09

Carlos M. Utrera, P.E.
Product Control Examiner
NOA No. 09-0813.06
Expiration Date: August 26, 2014
Approval Date: September 30, 2009

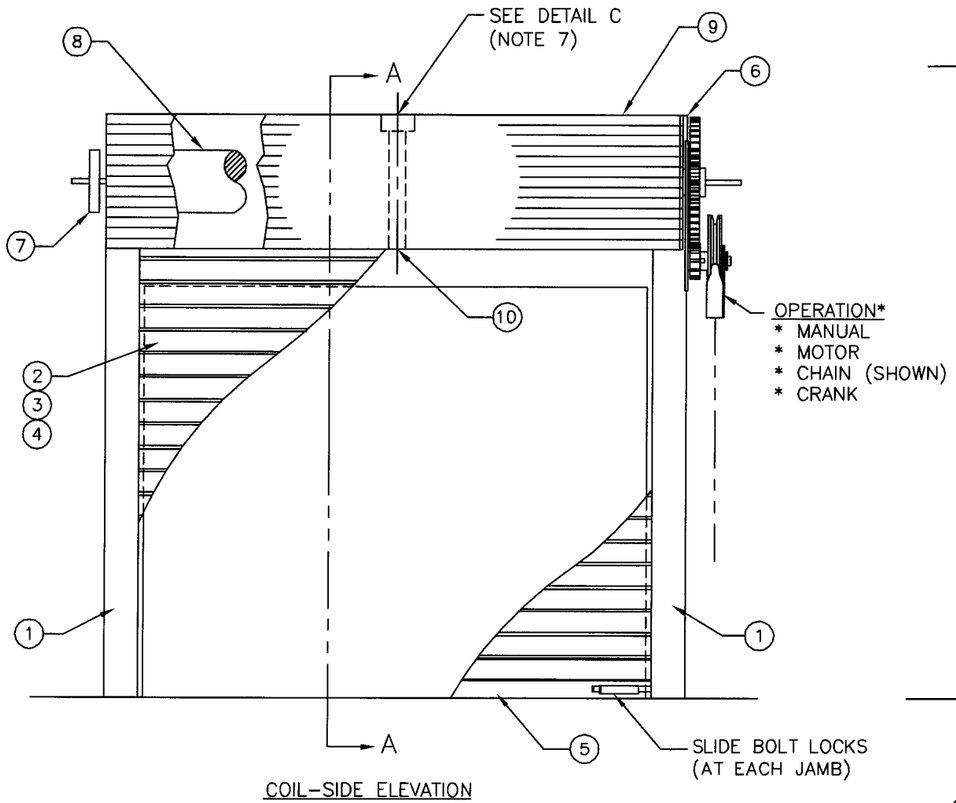

COIL-SIDE ELEVATION

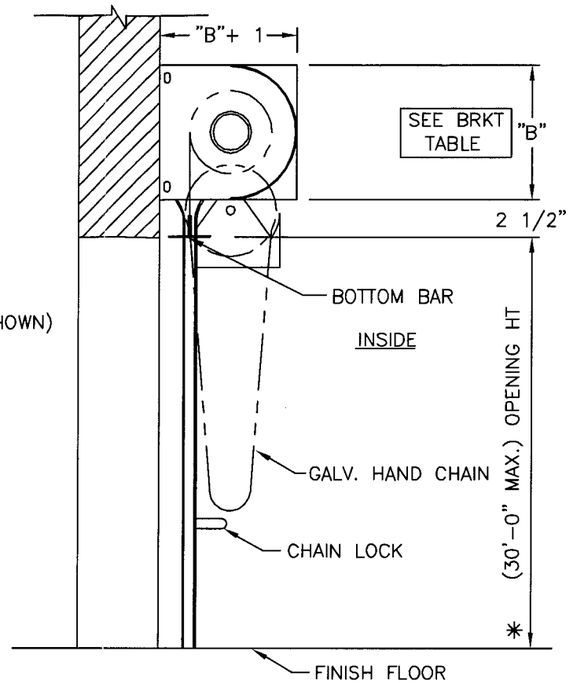

SECTION A-A

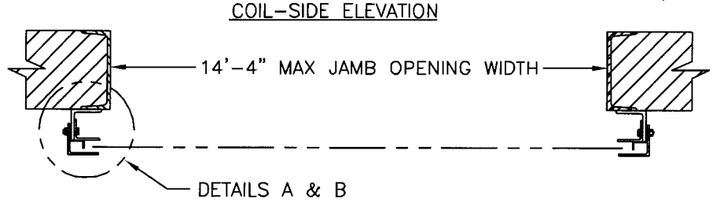

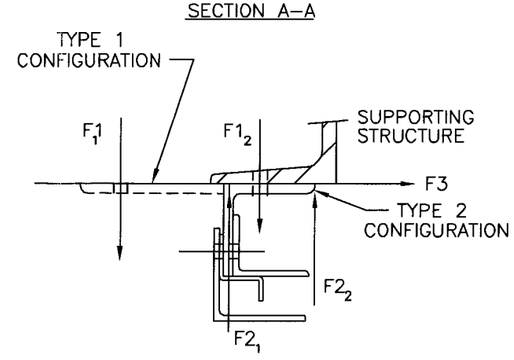

BRACKET TABLE #5 SLAT	
DOOR HT UP TO (FT)	BRACKET SIZE "B"
8	13"
16	15"
18	16"
20	18"
29	20"
30	22"

TABLE OF CONTENTS

SHEET #	DESCRIPTION
1	GENERAL NOTES AND ELEVATION
2	CROSS SECTIONS AND DETAILS
3	FORCE TABLE, FASTENER SCHEDULE & PARTS LIST

DADE COUNTY WIND DOOR 14'-4" WIDE

NOTES:

1. THIS DRAWING HAS BEEN APPROVED AS COMPLYING WITH THE FLORIDA BUILDING CODE 2007.
2. THIS DOOR HAS BEEN TESTED TO TAS 201,TAS 202,&TAS 203.
3. THE DOOR HAS A DESIGN PRESSURE OF ±52 PSF.
4. ANCHOR BOLTS ARE HILTI KWIK BOLT 3 INSTALLED ON 4000 PSI CONCRETE.
5. WALL ANGLE BOLTS TO BE GRADE 5. CALCULATIONS MADE WITH THREADS IN THE SHEAR PLANE.
6. TYPE E70 ELECTRODES TO BE USED FOR WELDED ATTACHMENT.
7. HOOD IS BOLTED TO BRKT. PLATE WITH #10 TEK SCREWS. INTERMEDIATE SUPPORT IS FURNISHED FOR HOODS OVER 14' WIDE.
8. CURTAIN IS FASTENED TO BARREL WITH 3/8" BOLTS @ 36" O.C. MAX.
9. WINDLOCKS/ENDLOCKS ARE ATTACHED TO SLATS WITH ø3/16" PLATED STEEL RIVETS. ENDLOCKS ARE PROVIDED ON CURTAIN ABOVE OPENING HEIGHT.
10. WINDLOCK BAR MATERIAL: FORMED 11 GAGE STEEL (DETAIL A).
11. STEEL PER ASTM A653, WITH A GALV COATING OF G90 (TAN) G60 (WHITE), G40 (GREY), AND G40 (POWDERCOATED) COATING AS TESTED IN THE ETC REPORT #ETC04013 DATED 10/11/04.
12. ADDITIONAL ANGLE CLIP REQUIRED, (1) AT THE TOP OF EACH GUIDE FOR DOORS OVER 20' HIGH WHEN MOUNTING TO CONCRETE.
13. ROLL UP MECHANISM NOT INCLUDED IN THIS APPROVAL. MUST BE CERTIFIED BY AN INDEPENDENT TESTING AGENCY.
14. SLATS ARE COLD ROLLED GALV STEEL, ASTM A653, SS, GRADE 50. TEST DOOR SAMPLE AT YIELD STRENGTH OF 49,000 PSI.

NO.	BY	DATE	REVISION
3	RG	6/2/09	AS NOTED
2	RG	7/14/05	ADD #45 SLAT / DECREASE ANCHOR SPACING
1	RG	7/12/04	AS NOTED
	RG	12/15/03	ORIGINAL DRAWING

COOKSON ROLLING DOORS
2417 S. 50th AVENUE
PHOENIX, AZ 85043
800 TULIP DRIVE
GASTONIA, NC 28052

DADE COUNTY DOOR 14'-4" ±52 PSF	
ENG. NAME: JOSEPH H. DIXON JR.	COOKSON APPROVAL
DISCIPLINE: STRUCTURAL	BY: E.E.
FL REGISTRATION: 7768	DATE: 7/14/05
DRAWING NO. FBC144-52-DC	SHEET 1 OF 3

6/24/09

PRODUCT REVISED
as complying with the Florida Building Code
Acceptance No 09-0813.06
Expiration Date 08/26/2014
By
Miami-Dade Product Control Division

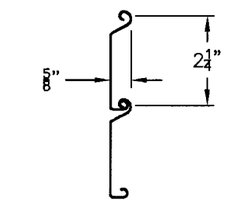

(2) SLAT: .0236

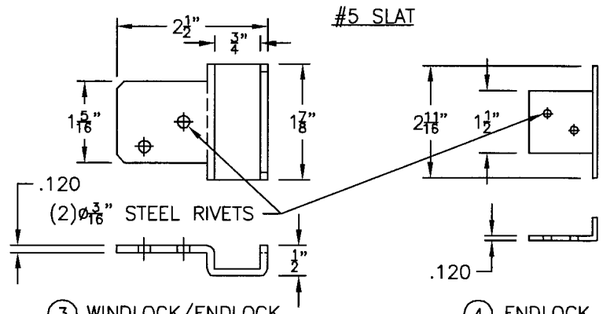

(3) WINDLOCK/ENDLOCK
11GA PLATED STEEL

(4) ENDLOCK
11GA PLATED STEEL

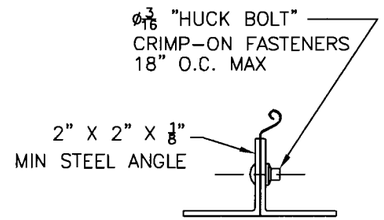

(5) BOTTOM BAR DETAIL

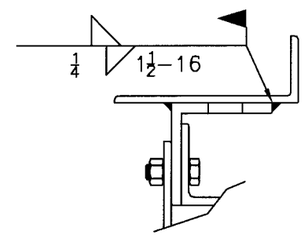

DETAIL B
WELDING TO STEEL JAMB
SIM. TO DETAIL A
EXCEPT AS NOTED
(FOR TYPE 2 GUIDE ONLY)

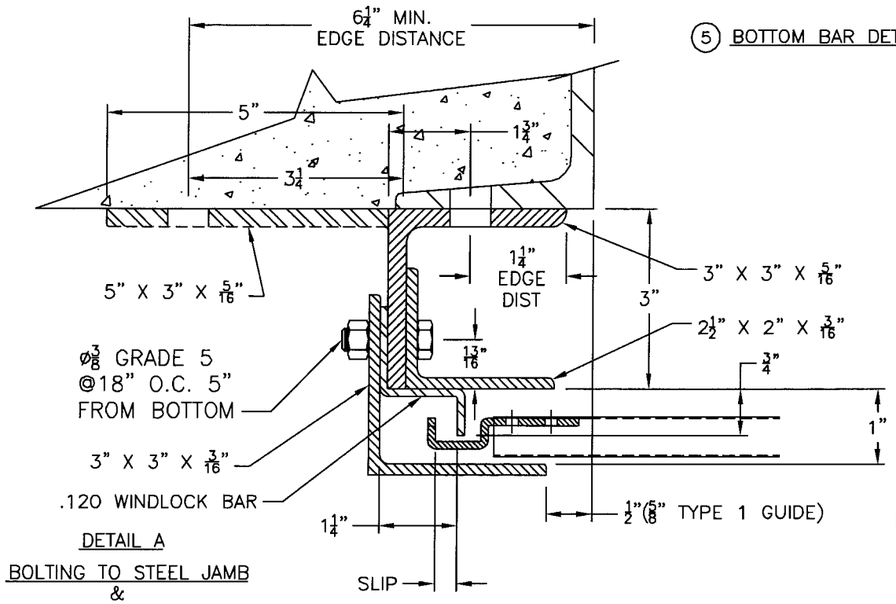

DETAIL A
BOLTING TO STEEL JAMB
&
ANCHORING TO CONCRETE

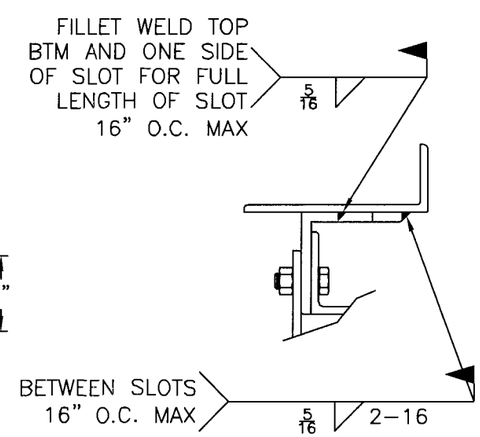

ALTERNATE WELDING TO STEEL JAMB

DADE COUNTY WIND DOOR 14'-4" WIDE

NO.	BY	DATE	REVISION
3	RG	6/2/09	AS NOTED
2	RG	7/14/05	ADD #45 SLAT / DECREASE ANCHOR SPACING
1	RG	7/12/04	AS NOTED
	RG	12/15/03	ORIGINAL DRAWING

COOKSON® ROLLING DOORS
2417 S. 50th AVENUE
PHOENIX, AZ 85043
800 TULIP DRIVE
GASTONIA, NC 28052

DADE COUNTY DOOR 14'-4" ±52 PSF

ENG. NAME: JOSEPH H. DIXON JR.	COOKSON APPROVAL
DISCIPLINE: STRUCTURAL	BY: E.E.
FL REGISTRATION: 7768	DATE: 7/12/04
DRAWING NO. FBC144-52-DC	SHEET 2 OF 3

6/24/09

PRODUCT REVISED
as complying with the Florida
Building Code
Acceptance No 09-0813.06
Expiration Date 08/26/2014
By
Miami-Dade Product Control
Division

FORCE ON STRUCTURE (#/FT.)

#5 SLAT

TYPE 1 GUIDE CONFIGURATION						TYPE 2 GUIDE CONFIGURATION					
POSITIVE (52 PSF)			NEGATIVE (52 PSF)			POSITIVE (52 PSF)			NEGATIVE (52 PSF)		
F1	F2	F3	F1	F2	F3	F1	F2	F3	F1	F2	F3
1829	1454	1980	2386	2761	1980	5562	5187	1980	5398	5772	1980

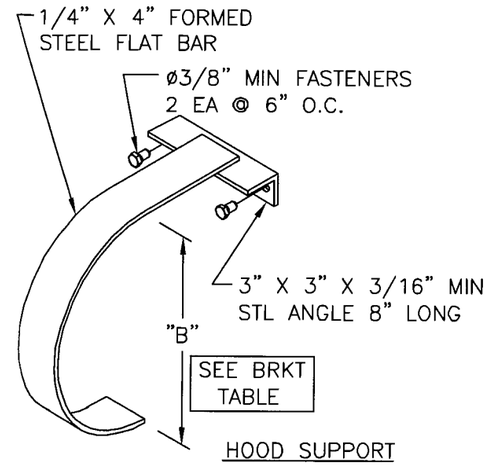

HOOD SUPPORT DETAIL C

FASTENER SCHEDULE

(1) WINDLOCK SPACING	SLIP	GUIDE ANGLE THICKNESS	WALL ANGLE THICKNESS	(3) CONCRETE ANCHOR	MIN EMBED-MENT	(2) WALL ANGLE BOLTS (GRADE 5)	GUIDE ANGLE ASSEMBLY BOLTS
1	7/16"	3/16"	5/16"	1/2ø @ 6" O.C.	3 1/2"	5/8ø @ 16" O.C.	3/8ø @ 18" O.C.

(1) WINDLOCK ON EVERY SLAT UP TO OPENING HEIGHT ON CURTAIN.

(2) 1 3/8 O.D. X 1/8 THICK WASHER

(3) 1/2"ø X 4-1/2 HILTI KWIK BOLT 3, MIN 6-1/4 EDGE DISTANCE FIRST ANCHOR 3" FROM BOTTOM. DO NOT USE FOR TYPE 2 INSTALLATION.

PARTS LIST

ITEM NO.	DESCRIPTION	QTY.	MATERIAL
1	GUIDE (PAIR)	1	STEEL, ASTM A-36
2	SLAT	AS REQ'D	GALV STEEL, ASTM A-653 SS GRADE 50 (NOTE 11)
3	WINDLOCK/ENDLOCK	AS REQ'D	STEEL, ASTM A-1011
4	ENDLOCK	AS REQ'D	STEEL, ASTM A-1011
5	BOTTOM BAR	1	STEEL, ASTM A-36
6	DRIVE BRACKET ASSEMBLY	1	STEEL, ASTM A-36
7	TENSION BRACKET ASSEMBLY	1	STEEL, ASTM A-36
8	BARREL PIPE/COUNTER BALANCE		STEEL, ASTM A-108, A-229, A-500
9	GALVANIZED HOOD	1	GALVANIZED STEEL, ASTM A-653 (NOTE 11)
10	HOOD SUPPORT	AS REQ'D	STEEL, ASTM A-36

DADE COUNTY WIND DOOR 14'-4" WIDE

NO.	BY	DATE	REVISION
3	RG	6/2/09	AS NOTED
2	RG	7/14/05	ADD #45 SLAT / DECREASE ANCHOR SPACING
1	RG	7/12/04	AS NOTED
	RG	12/15/03	ORIGINAL DRAWING

COOKSON ROLLING DOORS
2417 S. 50th AVENUE
PHOENIX, AZ 85043
800 TULIP DRIVE
GASTONIA, NC 28052

DADE COUNTY DOOR 14'-4" ±52 PSF

ENG. NAME: JOSEPH H. DIXON JR.	COOKSON APPROVAL
DISCIPLINE: STRUCTURAL	BY: E.E.
FL REGISTRATION: 7768	DATE: 7/14/05
DRAWING NO. FBC144-52-DC	SHEET 3 OF 3

6/24/09

PRODUCT REVISED
as complying with the Florida Building Code
Acceptance No 09-0813.06
Expiration Date 08/26/2014
By
Miami Dade Product Control Division