MIAMI-DADE COUNTY
BUILDING CODE COMPLIANCE OFFICE (BCCO)
PRODUCT CONTROL DIVISION

MIAMI-DADE COUNTY, FLORIDA
METRO-DADE FLAGLER BUILDING
140 WEST FLAGLER STREET, SUITE 1603
MIAMI, FLORIDA 33130-1563
(305) 375-2901 FAX (305) 372-6339
www.miamidade.gov/buildingcode

NOTICE OF ACCEPTANCE (NOA)

R.C. Aluminum Industries, Inc.
2805 NW 75th Avenue
Miami, FL 33122

SCOPE:

This NOA is being issued under the applicable rules and regulations governing the use of construction materials. The documentation submitted has been reviewed by Miami-Dade County Product Control Division and accepted by the Board of Rules and Appeals (BORA) to be used in Miami Dade County and other areas where allowed by the Authority Having Jurisdiction (AHJ).

This NOA shall not be valid after the expiration date stated below. The Miami-Dade County Product Control Division (In Miami Dade County) and/or the AHJ (in areas other than Miami Dade County) reserve the right to have this product or material tested for quality assurance purposes. If this product or material fails to perform in the accepted manner, the manufacturer will incur the expense of such testing and the AHJ may immediately revoke, modify, or suspend the use of such product or material within their jurisdiction. BORA reserves the right to revoke this acceptance, if it is determined by Miami-Dade County Product Control Division that this product or material fails to meet the requirements of the applicable building code. This product is approved as described herein, and has been designed to comply with the Florida Building Code, including the High Velocity Hurricane Zone.

DESCRIPTION: Series HR-2600 Aluminum Horizontal Sliding Window – S.M.I.

APPROVAL DOCUMENT: Drawing No.**W06-37**, titled "Series HR2600 Alum. Horizontal Sliding Wdw. (S.M.I.)", sheets 1 through 7 of 7, dated 06/20/06, with revision A dated 07/24/09, prepared by Al-Farooq Corporation, signed and sealed by Arshad Viqar, P.E., bearing the Miami-Dade County Product Control Revision stamp with the Notice of Acceptance number and expiration date by the Miami-Dade County Product Control Division.

MISSILE IMPACT RATING: Small Missile Impact Resistant

LABELING: Each unit shall bear a permanent label with the manufacturer's name or logo, city, state and following statement: "Miami-Dade County Product Control Approved", unless otherwise noted herein.

RENEWAL of this NOA shall be considered after a renewal application has been filed and there has been no change in the applicable building code negatively affecting the performance of this product.

TERMINATION of this NOA will occur after the expiration date or if there has been a revision or change in the materials, use, and/or manufacture of the product or process. Misuse of this NOA as an endorsement of any product, for sales, advertising or any other purposes shall automatically terminate this NOA. Failure to comply with any section of this NOA shall be cause for termination and removal of NOA.

ADVERTISEMENT: The NOA number preceded by the words Miami-Dade County, Florida, and followed by the expiration date may be displayed in advertising literature. If any portion of the NOA is displayed, then it shall be done in its entirety.

INSPECTION: A copy of this entire NOA shall be provided to the user by the manufacturer or its distributors and shall be available for inspection at the job site at the request of the Building Official.

This NOA **revises NOA # 06-0712.10** and consists of this page 1 and evidence page E-1, as well as approval document mentioned above.

The submitted documentation was reviewed by **Manuel Perez, P.E.**

MIAMI-DADE COUNTY APPROVED

R.C. Aluminum Industries, Inc.

NOTICE OF ACCEPTANCE: EVIDENCE SUBMITTED

A. DRAWINGS

1. Manufacturer's die drawings and sections.
2. Drawing No **W06-37**, Sheets 1 through 7 of 7, titled "Series HR-2600 Alum. Horizontal Sliding Wdw. (S.M.I.)", dated 06/20/06, with revision A dated 07/24/09, prepared by Al-Farooq Corporation, signed and sealed by Arshad Viqar, P.E.

B. TESTS

1. Test reports on 1) Air Infiltration Test, per FBC, TAS 202-94
   2) Uniform Static Air Pressure Test, Loading per FBC TAS 202-94
   3) Water Resistance Test, per FBC, TAS 202-94
   4) Small Missile Impact Test per FBC, TAS 201-94
   5) Cyclic Wind Pressure Loading per FBC, TAS 203-94
   6) Forced Entry Test, per FBC 2411 3.2.1, TAS 202-94

   along with marked-up drawings and installation diagram of XOX aluminum horizontal sliding window, prepared by Fenestration Testing Laboratory, Inc., Test Report No. **FTL-4770**, dated 01/17/06, signed and sealed by Edmundo Largaespada, P.E. ***(Submitted under previous NOA#06-0712.10)***

C. CALCULATIONS

1. Anchor verification calculations and structural analysis, complying with FBC-2007, prepared by Al-Farooq Corporation, dated 07/22/09, signed and sealed by Arshad Viqar, P.E. **Complies with ASTM E1300-02/04**

D. QUALITY ASSURANCE

1. Miami Dade Building Code Compliance Office (BCCO).

E. MATERIAL CERTIFICATIONS

1. Notice of Acceptance No. **09-0312.02** issued to E.I. DuPont DeNemours & Co., Inc. for their "**DuPont Butacite® PVB, Interlayer**" dated 05/13/09, expiring on 12/11/10.

F. STATEMENTS

1. Statement letter of compliance and no financial interest, dated June 29, 2009, signed and sealed by Arshad Viqar, P.E.
2. Laboratory compliance letter for Test Report no. **FTL- 4770**, issued by Fenestration Testing Laboratory, Inc., dated February 24, 2006, signed and sealed by Edmundo Largaespada, P.E.

G. OTHERS

1. Notice of Acceptance No. **06-0712.10**, issued to R.C. Aluminum Industries, Inc. for their Series HR2600 Aluminum Horizontal Sliding Window – S.M.I., approved on 09/07/06 and expiring on 09/07/11.

Manuel Perez, P.E.
Product Control Examiner
NOA No. 09-0825.07
Expiration Date: September 07, 2011
Approval Date: November 23, 2009

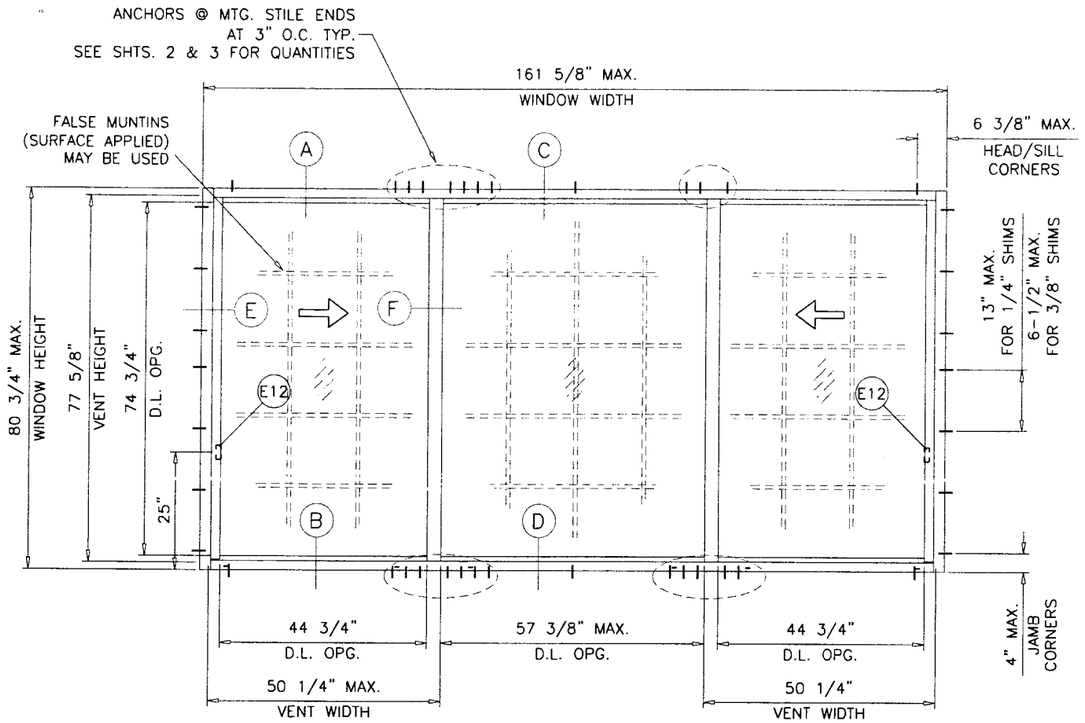

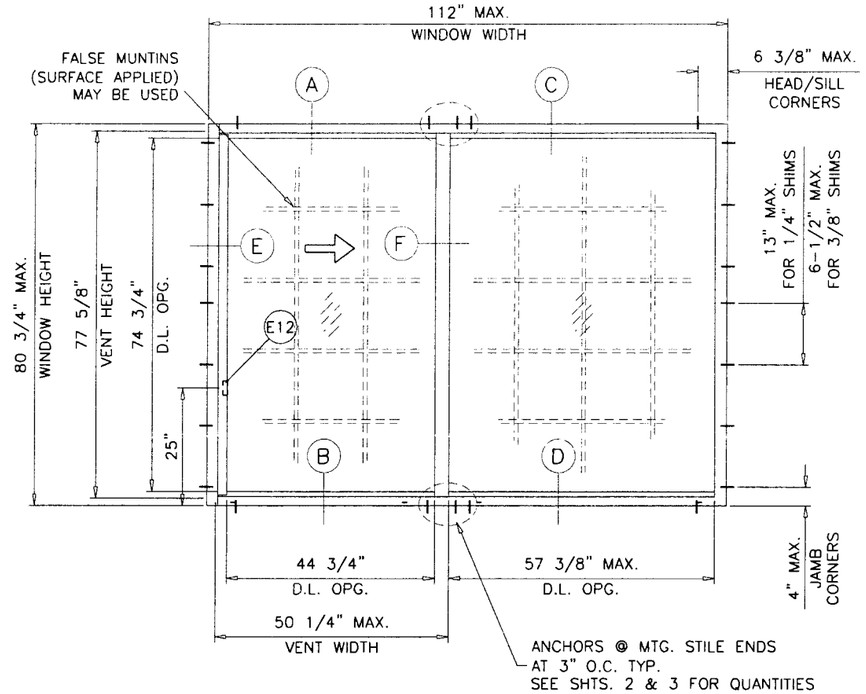

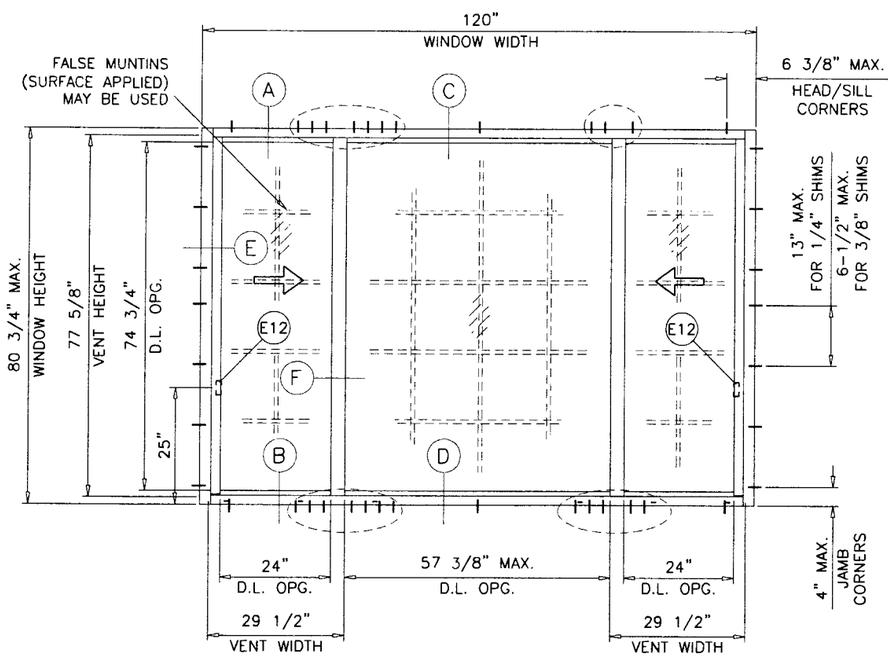

TYPICAL ELEVATIONS

THESE WINDOWS ARE RATED FOR SMALL MISSILE IMPACT.
MIAMI-DADE COUNTY APPROVED IMPACT RESISTANT SHUTTERS
REQUIRED FOR INSTALLATIONS UP TO 30 FT. OF GRADE.
SHUTTERS NOT REQD. FOR INSTALLATIONS ABOVE 30 FT. OF GRADE.

SERIES HR2600
ALUMINUM HORIZONTAL SLIDING WINDOW

DESIGN LOAD RATINGS FOR THESE WINDOWS TO BE AS PER CHARTS SHOWN ON SHEETS 2 & 3.

APPROVAL APPLIES TO SINGLE UNITS OR SIDE BY SIDE COMBINATIONS OF H.S./H.S. OR HORIZONTAL SLIDING WITH OTHER MIAMI-DADE COUNTY APPR'D WINDOWS USING MIAMI-DADE COUNTY APPROVED MULLIONS IN BETWEEN.
LOWER DESIGN PRESSURE FROM WINDOWS OR MULLION APPROVAL WILL APPLY TO ENTIRE SYSTEM.

THIS PRODUCT HAS BEEN DESIGNED AND TESTED TO COMPLY WITH THE REQUIREMENTS OF THE FLORIDA BUILDING CODE 2007 EDITION INCLUDING HIGH VELOCITY HURRICANE ZONE (HVHZ).

ANCHORS SHALL BE AS LISTED, SPACED AS SHOWN ON DETAILS, ANCHORS EMBEDMENT TO BASE MATERIAL SHALL BE BEYOND WALL DRESSING OR STUCCO.

ANCHORING OR LOADING CONDITIONS NOT SHOWN IN THESE DETAILS ARE NOT PART OF THIS APPROVAL.

MATERIALS INCLUDING BUT NOT LIMITED TO STEEL/METAL SCREWS, THAT COME INTO CONTACT WITH OTHER DISSIMILAR MATERIALS SHALL MEET THE REQUIREMENTS OF 2007 FLORIDA BLDG. CODE SECTION 2003.8.4.

LAMINATED GLASS
SMALL MISSILE IMPACT

Engr: ARSHAD VIQAR
CIVIL
FLA. PE # 38863
C.A.N. 3538

AUG 0 4 2009

PRODUCT REVISED
as complying with the Florida
Building Code
Acceptance No. 09-0825.07
Expiration Date SEPT. 7, 2011
By Manuel Perez
Miami-Dade Product Control
Division

AL-FAROOQ CORPORATION
ENGINEERS & PRODUCT DEVELOPMENT
1235 S.W. 87 AVE
MIAMI, FLORIDA 33174
TEL. (305) 264-8100 FAX. (305) 262-6978
COMP-ANL\W06-37RC

SERIES HR2600 ALUM HORIZONTAL SLIDING WDW.(S.M.I.)

R.C. ALUMINUM INDUSTRIES INC.
2805 N.W. 75 TH AVE.
MIAMI, FL. 33122
TEL. (305) 592-1515 FAX. (305) 592-2184

revisions:

no	date	by	description
A	07.24.09		UPDATED FOR 2007 FBC

date: 06-20-06
scale: 3/8"=1'-0"
dr. by: HAMID
chk. by:

drawing no.
W06-37

sheet 1 of 7

DESIGN LOAD CAPACITY - PSF (XO OR OX SIZES)										
		1/4" KWIK-CON ANCHORS			1/4" KWIK-FLEX SCREWS					
		3/8" SHIM SPACE			1/4" SHIM SPACE			3/8" SHIM SPACE		
WINDOW DIMS.		A3	A4	A5	A3	A4	A5	A6	A7	A8
WIDTH	HEIGHT	EXT.(+) INT.(-)	EXT.(+) INT.(-)	EXT.(+) INT.(-)	EXT.(+) INT.(-)	EXT.(+) INT.(-)	EXT.(+) INT.(-)	EXT.(+) INT.(-)	EXT.(+) INT.(-)	EXT.(+) INT.(-)
36"	36"	120.0	120.0	120.0	120.0	120.0	120.0	120.0	120.0	120.0
48"		120.0	120.0	120.0	120.0	120.0	120.0	120.0	120.0	120.0
60"		120.0	120.0	120.0	120.0	120.0	120.0	120.0	120.0	120.0
72"		120.0	120.0	120.0	120.0	120.0	120.0	120.0	120.0	120.0
84"		120.0	120.0	120.0	120.0	120.0	120.0	120.0	120.0	120.0
96"		120.0	120.0	120.0	120.0	120.0	120.0	120.0	120.0	120.0
108"		120.0	120.0	120.0	120.0	120.0	120.0	120.0	120.0	120.0
112"		120.0	120.0	120.0	120.0	120.0	120.0	120.0	120.0	120.0
36"	48"	120.0	120.0	120.0	120.0	120.0	120.0	120.0	120.0	120.0
48"		120.0	120.0	120.0	120.0	120.0	120.0	120.0	120.0	120.0
60"		120.0	120.0	120.0	120.0	120.0	120.0	120.0	120.0	120.0
72"		120.0	120.0	120.0	120.0	120.0	120.0	120.0	120.0	120.0
84"		120.0	120.0	120.0	120.0	120.0	120.0	120.0	120.0	120.0
96"		120.0	120.0	120.0	120.0	120.0	120.0	120.0	120.0	120.0
108"		120.0	120.0	120.0	120.0	120.0	120.0	120.0	120.0	120.0
112"		120.0	120.0	120.0	120.0	120.0	120.0	120.0	120.0	120.0
36"	60"	120.0	120.0	120.0	120.0	120.0	120.0	120.0	120.0	120.0
48"		120.0	120.0	120.0	120.0	120.0	120.0	120.0	120.0	120.0
60"		120.0	120.0	120.0	120.0	120.0	120.0	120.0	120.0	120.0
72"		120.0	120.0	120.0	120.0	120.0	120.0	120.0	120.0	120.0
84"		120.0	120.0	120.0	120.0	120.0	120.0	120.0	120.0	120.0
96"		120.0	120.0	120.0	118.5	120.0	120.0	120.0	120.0	120.0
108"		115.2	120.0	120.0	105.3	120.0	120.0	120.0	120.0	120.0
112"		111.1	120.0	120.0	101.6	120.0	120.0	120.0	120.0	120.0
36"	72"	120.0	120.0	120.0	120.0	120.0	120.0	120.0	120.0	120.0
48"		120.0	120.0	120.0	120.0	120.0	120.0	120.0	120.0	120.0
60"		120.0	120.0	120.0	120.0	120.0	120.0	120.0	120.0	120.0
72"		120.0	120.0	120.0	120.0	120.0	120.0	120.0	120.0	120.0
84"		120.0	120.0	120.0	112.9	120.0	120.0	120.0	120.0	120.0
96"		108.0	120.0	120.0	98.8	120.0	120.0	120.0	120.0	120.0
108"		96.0	120.0	120.0	87.8	117.0	120.0	113.3	120.0	120.0
112"		92.6	120.0	120.0	84.6	112.9	120.0	109.2	120.0	120.0
36"	80-3/4"	120.0	120.0	120.0	120.0	120.0	120.0	120.0	120.0	120.0
48"		120.0	120.0	120.0	120.0	120.0	120.0	120.0	120.0	120.0
60"		120.0	120.0	120.0	120.0	120.0	120.0	120.0	120.0	120.0
72"		120.0	120.0	120.0	117.4	120.0	120.0	120.0	120.0	120.0
84"		110.1	120.0	120.0	100.6	120.0	120.0	120.0	120.0	120.0
96"		96.3	120.0	120.0	88.0	117.4	120.0	113.6	120.0	120.0
108"		85.6	114.1	120.0	78.3	104.4	120.0	101.0	117.8	120.0
112"		82.5	110.1	120.0	75.5	100.6	120.0	97.4	113.6	120.0

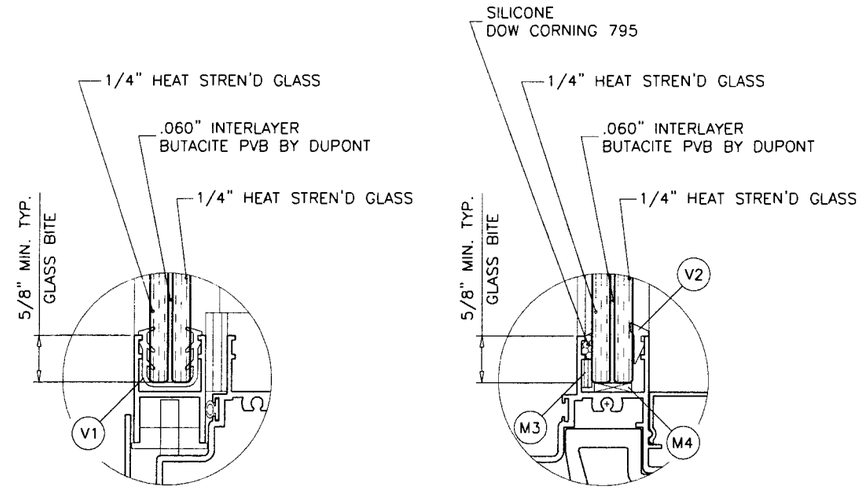

VENT

FIX. LITE

GLAZING DETAIL

D.L. OPG. DIMENSIONS

MAXIMUM WIDTH = 57-3/8"

MAXIMUIM HEIGHT = 74-3/4"

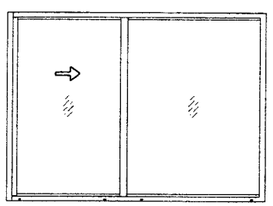

ANCHORS TYPES: SEE SHEET 4 FOR DESCRIPTION

A3 = (3) ANCHORS AT MTG. STILE ENDS
A4 = (4) ANCHORS AT MTG. STILE ENDS
A5 = (5) ANCHORS AT MTG. STILE ENDS
A6 = (6) ANCHORS AT MTG. STILE ENDS
A7 = (7) ANCHORS AT MTG. STILE ENDS
A8 = (8) ANCHORS AT MTG. STILE ENDS

NOTE:
GLASS CAPACITIES ON THIS SHEET ARE BASED ON ASTM E1300-02/04 (3 SEC. GUSTS) AND FLORIDA BUILDING COMMISSION DECLARATORY STATEMENT DCA05-DEC-219

Engr: ARSHAD VIQAR
CIVIL
FLA. PE # 38863
C.A.N. 3538

AUG 0 4 2009

PRODUCT REVISED
as complying with the Florida Building Code
Acceptance No. 09-0825.07
Expiration Date SEPT. 7, 2011
By Miami-Dade Product Control Division

AL-FAROOQ CORPORATION
ENGINEERS & PRODUCT DEVELOPMENT
1235 S.W. 87 AVE
MIAMI, FLORIDA 33174
TEL. (305) 264-8100 FAX. (305) 262-6978
COMP-ANL\W06-37RC

SERIES HR2600 ALUM HORIZONTAL SLIDING WDW.(S.M.I.)

R.C. ALUMINUM INDUSTRIES INC.
2805 N.W. 75 TH AVE.
MIAMI, FL. 33122
TEL. (305) 592-1515 FAX. (305) 592-2184

revisions:

no	date	by	description
A	07.24.09		UPDATED FOR 2007 FBC

date: 06-20-06
scale: 1/2"=1'-0"
dr. by: HAMID
chk. by:

drawing no.
W06-37

DESIGN LOAD CAPACITY – PSF (XOX SIZES)

WINDOW DIMS.		1/4" KWIK-CON ANCHORS			1/4" KWIK-FLEX SCREWS					
		3/8" SHIM SPACE			1/4" SHIM SPACE			3/8" SHIM SPACE		
		A3	A4	A5	A3	A4	A5	A6	A7	A8
WIDTH	HEIGHT	EXT.(+) INT.(–)	EXT.(+) INT.(–)	EXT.(+) INT.(–)	EXT.(+) INT.(–)	EXT.(+) INT.(–)	EXT.(+) INT.(–)	EXT.(+) INT.(–)	EXT.(+) INT.(–)	EXT.(+) INT.(–)
84"	36"	120.0	120.0	120.0	120.0	120.0	120.0	120.0	120.0	120.0
96"		120.0	120.0	120.0	120.0	120.0	120.0	120.0	120.0	120.0
108"		120.0	120.0	120.0	120.0	120.0	120.0	120.0	120.0	120.0
120"		120.0	120.0	120.0	120.0	120.0	120.0	120.0	120.0	120.0
132"		120.0	120.0	120.0	120.0	120.0	120.0	120.0	120.0	120.0
144"		120.0	120.0	120.0	120.0	120.0	120.0	120.0	120.0	120.0
156"		120.0	120.0	120.0	120.0	120.0	120.0	120.0	120.0	120.0
161-5/8"		120.0	120.0	120.0	120.0	120.0	120.0	120.0	120.0	120.0
84"	48"	120.0	120.0	120.0	120.0	120.0	120.0	120.0	120.0	120.0
96"		120.0	120.0	120.0	120.0	120.0	120.0	120.0	120.0	120.0
108"		120.0	120.0	120.0	120.0	120.0	120.0	120.0	120.0	120.0
120"		120.0	120.0	120.0	120.0	120.0	120.0	120.0	120.0	120.0
132"		120.0	120.0	120.0	120.0	120.0	120.0	120.0	120.0	120.0
144"		120.0	120.0	120.0	120.0	120.0	120.0	120.0	120.0	120.0
156"		120.0	120.0	120.0	120.0	120.0	120.0	120.0	120.0	120.0
161-5/8"		120.0	120.0	120.0	120.0	120.0	120.0	120.0	120.0	120.0
84"	60"	120.0	120.0	120.0	120.0	120.0	120.0	120.0	120.0	120.0
96"		120.0	120.0	120.0	120.0	120.0	120.0	120.0	120.0	120.0
108"		120.0	120.0	120.0	120.0	120.0	120.0	120.0	120.0	120.0
120"		120.0	120.0	120.0	120.0	120.0	120.0	120.0	120.0	120.0
132"		120.0	120.0	120.0	120.0	120.0	120.0	120.0	120.0	120.0
144"		120.0	120.0	120.0	118.5	120.0	120.0	120.0	120.0	120.0
156"		119.6	120.0	120.0	109.4	120.0	120.0	120.0	120.0	120.0
161-5/8"		115.5	120.0	120.0	105.6	120.0	120.0	120.0	120.0	120.0
84"	72"	120.0	120.0	120.0	120.0	120.0	120.0	120.0	120.0	120.0
96"		120.0	120.0	120.0	120.0	120.0	120.0	120.0	120.0	120.0
108"		120.0	120.0	120.0	120.0	120.0	120.0	120.0	120.0	120.0
120"		120.0	120.0	120.0	118.5	120.0	120.0	120.0	120.0	120.0
132"		117.8	120.0	120.0	107.7	120.0	120.0	120.0	120.0	120.0
144"		108.0	120.0	120.0	98.8	120.0	120.0	120.0	120.0	120.0
156"		99.7	120.0	120.0	91.2	120.0	120.0	117.6	120.0	120.0
161-5/8"		96.2	120.0	120.0	88.0	117.3	120.0	113.5	120.0	120.0
84"	80-3/4"	120.0	120.0	120.0	120.0	120.0	120.0	120.0	120.0	120.0
96"		120.0	120.0	120.0	120.0	120.0	120.0	120.0	120.0	120.0
108"		120.0	120.0	120.0	117.4	120.0	120.0	120.0	120.0	120.0
120"		115.6	120.0	120.0	105.7	120.0	120.0	120.0	120.0	120.0
132"		105.1	120.0	120.0	96.1	120.0	120.0	120.0	120.0	120.0
144"		96.3	120.0	120.0	88.0	117.4	120.0	113.6	120.0	120.0
156"		88.9	118.5	120.0	81.3	108.4	120.0	104.9	120.0	120.0
161-5/8"		85.8	114.4	120.0	78.4	104.6	120.0	101.2	118.1	120.0

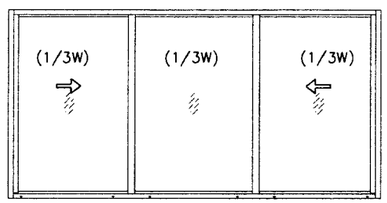

OPERATING VENTS TO BE 1/3 OF THE WINDOW WIDTH

ANCHORS TYPES: SEE SHEET 4 FOR DESCRIPTION

A3 = (3) ANCHORS AT MTG. STILE ENDS
A4 = (4) ANCHORS AT MTG. STILE ENDS
A5 = (5) ANCHORS AT MTG. STILE ENDS
A6 = (6) ANCHORS AT MTG. STILE ENDS
A7 = (7) ANCHORS AT MTG. STILE ENDS
A8 = (8) ANCHORS AT MTG. STILE ENDS

NOTE:
GLASS CAPACITIES ON THIS SHEET ARE BASED ON ASTM E1300-02/04 (3 SEC. GUSTS) AND FLORIDA BUILDING COMMISSION DECLARATORY STATEMENT DCA05-DEC-219

DESIGN LOAD CAPACITY – PSF (XOX SIZES)

WINDOW DIMS.		1/4" KWIK-CON ANCHORS			1/4" KWIK-FLEX SCREWS					
		3/8" SHIM SPACE			1/4" SHIM SPACE			3/8" SHIM SPACE		
		A3	A4	A5	A3	A4	A5	A6	A7	A8
WIDTH	HEIGHT	EXT.(+) INT.(–)	EXT.(+) INT.(–)	EXT.(+) INT.(–)	EXT.(+) INT.(–)	EXT.(+) INT.(–)	EXT.(+) INT.(–)	EXT.(+) INT.(–)	EXT.(+) INT.(–)	EXT.(+) INT.(–)
84"	36"	120.0	120.0	120.0	120.0	120.0	120.0	120.0	120.0	120.0
96"		120.0	120.0	120.0	120.0	120.0	120.0	120.0	120.0	120.0
108"		120.0	120.0	120.0	120.0	120.0	120.0	120.0	120.0	120.0
120"		120.0	120.0	120.0	120.0	120.0	120.0	120.0	120.0	120.0
132"		120.0	120.0	120.0	120.0	120.0	120.0	120.0	120.0	120.0
144"		120.0	120.0	120.0	120.0	120.0	120.0	120.0	120.0	120.0
156"		120.0	120.0	120.0	120.0	120.0	120.0	120.0	120.0	120.0
161-5/8"		120.0	120.0	120.0	120.0	120.0	120.0	120.0	120.0	120.0
84"	48	120.0	120.0	120.0	120.0	120.0	120.0	120.0	120.0	120.0
96"		120.0	120.0	120.0	120.0	120.0	120.0	120.0	120.0	120.0
108"		120.0	120.0	120.0	120.0	120.0	120.0	120.0	120.0	120.0
120"		120.0	120.0	120.0	120.0	120.0	120.0	120.0	120.0	120.0
132"		120.0	120.0	120.0	120.0	120.0	120.0	120.0	120.0	120.0
144"		120.0	120.0	120.0	120.0	120.0	120.0	120.0	120.0	120.0
156"		120.0	120.0	120.0	120.0	120.0	120.0	120.0	120.0	120.0
161-5/8"		120.0	120.0	120.0	117.3	120.0	120.0	120.0	120.0	120.0
84"	60"	120.0	120.0	120.0	120.0	120.0	120.0	120.0	120.0	120.0
96"		120.0	120.0	120.0	120.0	120.0	120.0	120.0	120.0	120.0
108"		120.0	120.0	120.0	120.0	120.0	120.0	120.0	120.0	120.0
120"		120.0	120.0	120.0	120.0	120.0	120.0	120.0	120.0	120.0
132"		120.0	120.0	120.0	114.9	120.0	120.0	120.0	120.0	120.0
144"		115.2	120.0	120.0	105.3	120.0	120.0	120.0	120.0	120.0
156"		106.3	120.0	120.0	97.2	120.0	120.0	120.0	120.0	120.0
161-5/8"		102.7	120.0	120.0	93.9	120.0	120.0	120.0	120.0	120.0
84"	72"	120.0	120.0	120.0	120.0	120.0	120.0	120.0	120.0	120.0
96"		120.0	120.0	120.0	120.0	120.0	120.0	120.0	120.0	120.0
108"		120.0	120.0	120.0	117.0	120.0	120.0	120.0	120.0	120.0
120"		115.2	120.0	120.0	105.3	120.0	120.0	120.0	120.0	120.0
132"		104.7	120.0	120.0	95.8	120.0	120.0	120.0	120.0	120.0
84"	80-3/4"	120.0	120.0	120.0	120.0	120.0	120.0	120.0	120.0	120.0
96"		120.0	120.0	120.0	117.4	120.0	120.0	120.0	120.0	120.0
108"		114.1	120.0	120.0	104.4	120.0	120.0	120.0	120.0	120.0
120"		102.7	120.0	120.0	93.9	120.0	120.0	120.0	120.0	120.0

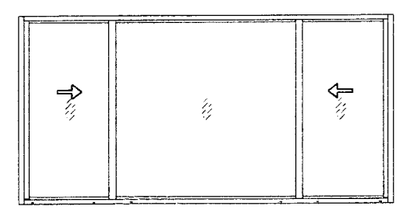

OPERATING VENTS TO BE 1/4 TO 1/3 OF THE WINDOW WIDTH

Engr: ARSHAD VIQAR
CIVIL
FLA. PE # 38863
C.A.N. 3538

AUG 0 4 2009

PRODUCT REVISED
as complying with the Florida Building Code
Acceptance No. 09-0825.07
Expiration Date SEPT. 7, 2011
By Manuel Perez
Miami-Dade Product Control Division

AL-FAROOQ CORPORATION
ENGINEERS & PRODUCT DEVELOPMENT
1235 S.W. 87 AVE
MIAMI, FLORIDA 33174
TEL. (305) 264-8100 FAX. (305) 262-6978
COMP-ANL\W06-37RC

SERIES HR2600 ALUM HORIZONTAL SLIDING WDW.(S.M.I.)

R.C. ALUMINUM INDUSTRIES INC.
2805 N.W. 75 TH AVE.
MIAMI, FL. 33122
TEL. (305) 592-1515 FAX. (305) 592-2184

revisions:

no	date	by	description
A	07.24.09		UPDATED FOR 2007 FBC

date: 06-20-06
scale: 1/2"=1'-0"
dr. by: HAMID
chk. by:

drawing no. W06-37

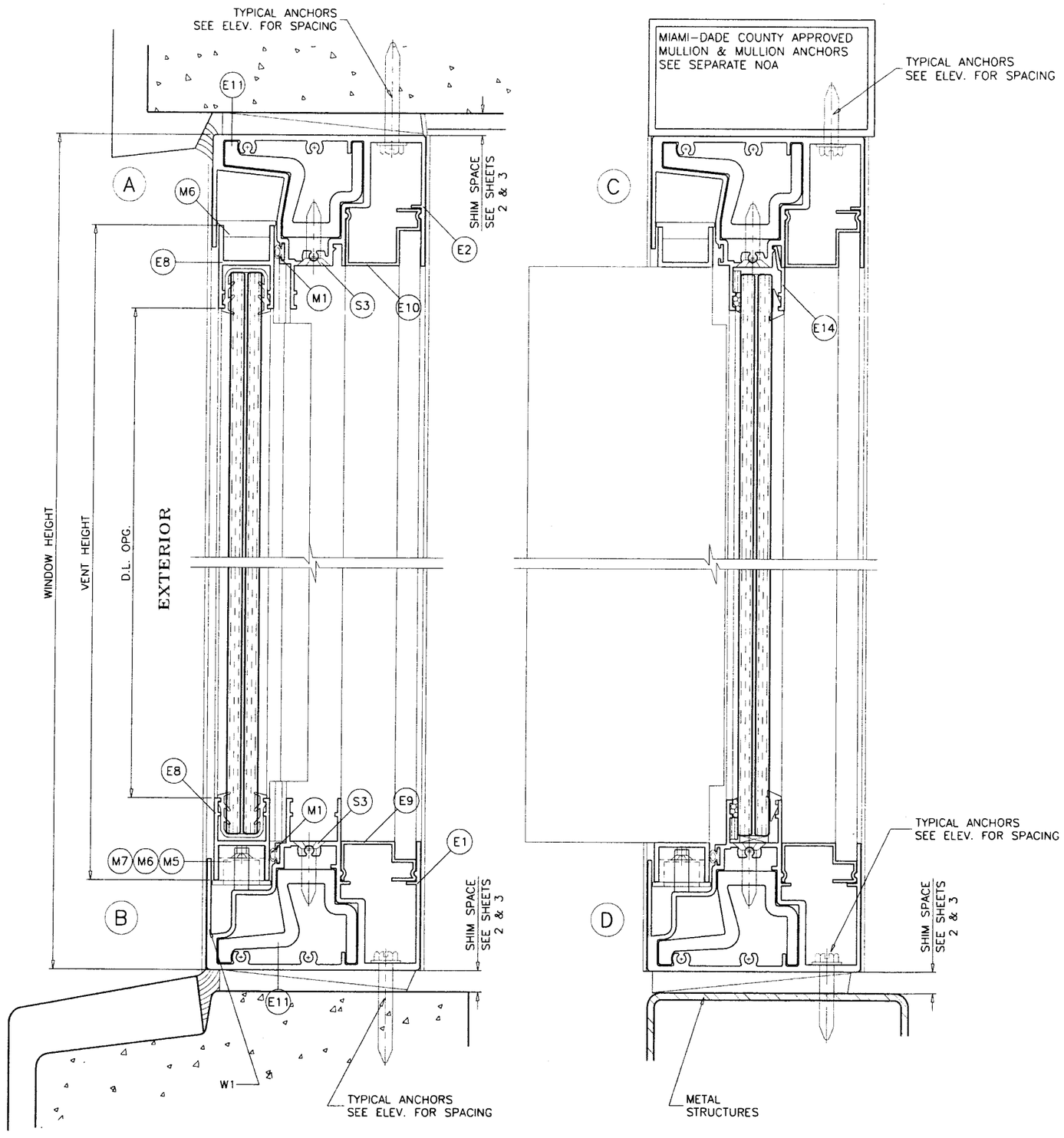

METAL STRUCTURE NOT BY RC ALUMINUM
MUST SUSTAIN LOADS IMPOSED BY GLAZING SYSTEM
AND TRANSFER THEM TO THE BUILDING STRUCTURE.

TYPICAL ANCHORS: SEE ELEV. FOR SPACING

1/4" DIA. HILTI KWIK-CON II (Fu=163 KSI, Fy=157 KSI)

DIRECTLY INTO CONC. OR MASONRY
1-1/4" MIN. EMBED INTO CONC. OR MASONRY

1/4" DIA. HILTI KWIK-FLEX SELF DRILLING SCREWS (Fu=92 KSI, Fy=120 KSI)

INTO MIAMI-DADE COUNTY APPROVED MULLIONS (MIN. THK. = .090")
INTO METAL STRUCTURES
STEEL : 12 GA. MIN. (Fy = 36 KSI MIN.)
ALUMINUM : 1/8" THK. MIN. (6063-T5 MIN.)
(STEEL IN CONTACT WITH ALUMINUM TO BE PLATED OR PAINTED)

ANCHOR EDGE DISTANCES

INTO CONCRETE AND MASONRY = 2-1/2" MIN.
INTO METAL STRUCTURE = 3/4" MIN.

CONCRETE f'c = 3000 PSI MIN.
C-90 HOLLOW/FILLED BLOCK f'm = 2000 PSI MIN.

SEALANTS:

ALL JOINTS AND FRAME CONNECTIONS SEALED WITH
WHITE/ALUM COLORED SILICONE.

WEEPHOLES:

W1 = 1" X 1/4" WEEPHOLES TWO PER LITE AT 6" FROM
ENDS WITH PLASTIC BAFFLE

Engr: ARSHAD VIQAR
CIVIL
FLA. PE # 38863
C.A.N. 3538

AUG 0 4 2009

PRODUCT REVISED
as complying with the Florida
Building Code
Acceptance No. 09-0825.07
Expiration Date SEPT. 7, 2011
By Manuel Perez
Miami Dade Product Control
Division

AL-FAROOQ CORPORATION
ENGINEERS & PRODUCT DEVELOPMENT
1235 S.W. 87 AVE
MIAMI, FLORIDA 33174
TEL. (305) 264-8100 FAX. (305) 262-6978
COMP-ANL\W06-37RC

SERIES HR2600 ALUM HORIZONTAL SLIDING WDW.(S.M.I.)

R.C. ALUMINUM INDUSTRIES INC.
2805 N.W. 75 TH AVE.
MIAMI, FL. 33122
TEL. (305) 592-1515 FAX. (305) 592-2184

revisions:

no	date	by	description
A	07.24.09		UPDATED FOR 2007 FBC

date: 06-20-06
scale: 1/2" = 1"
dr. by: HAMID
chk. by:

drawing no.
W06-37

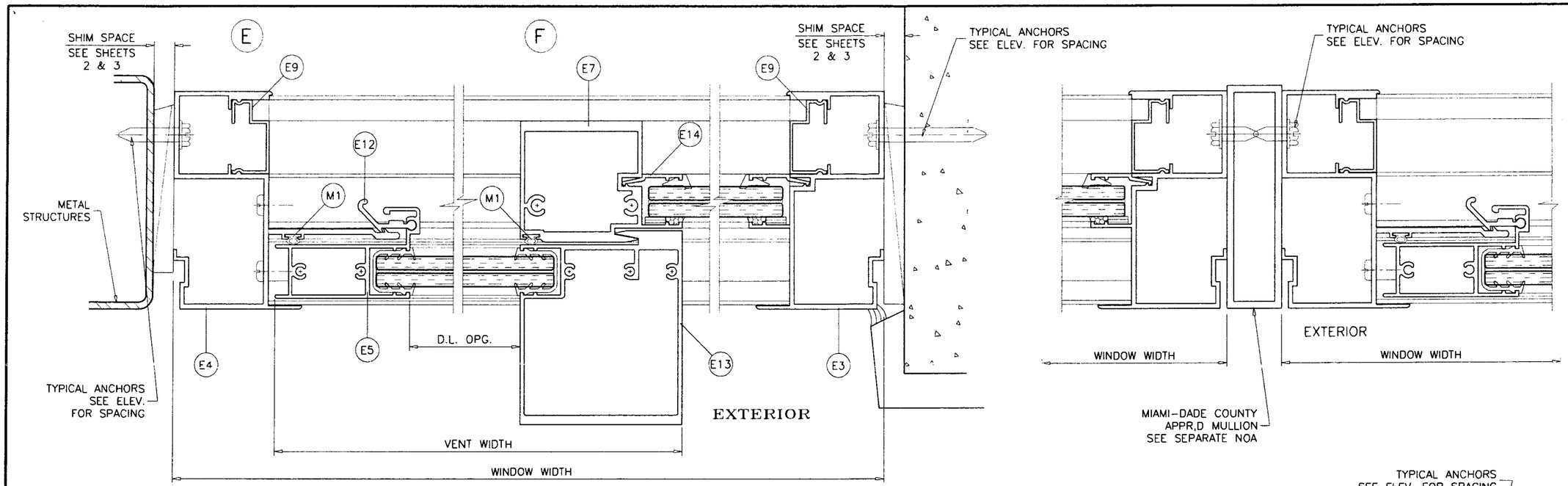

XO LAYOUT
OX OPPOSITE

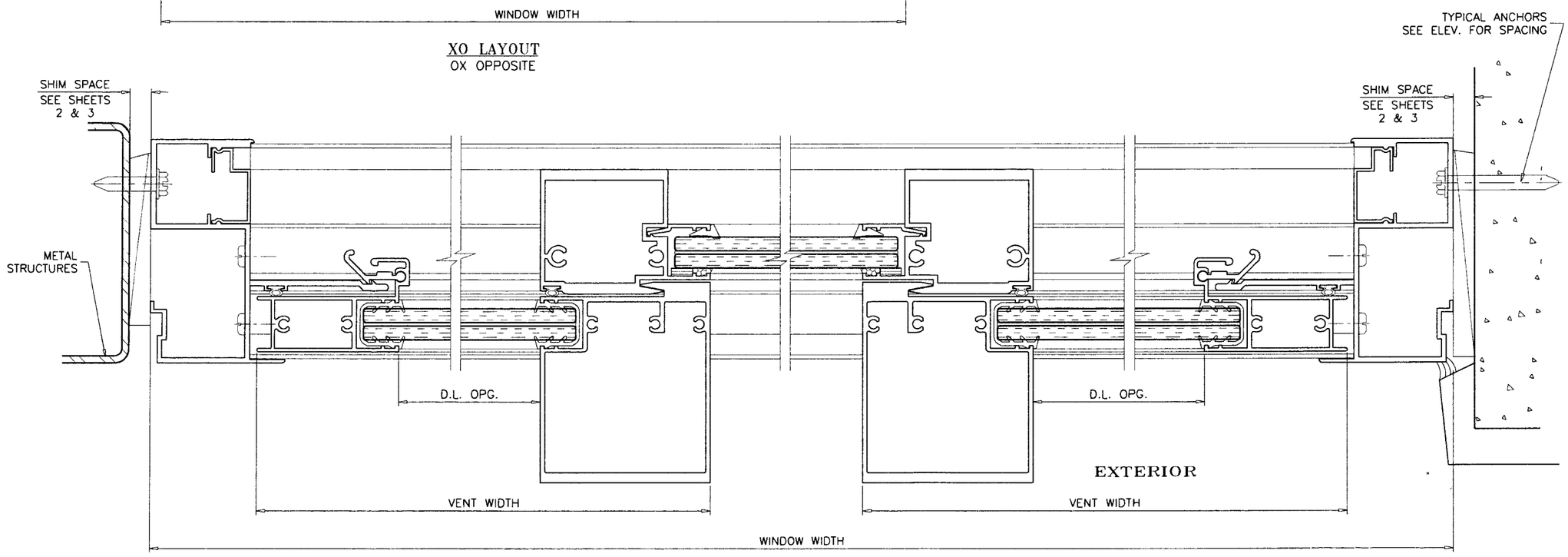

XOX LAYOUT

Engr: ARSHAD VIQAR
CIVIL
FLA. PE # 38863
C.A.N. 3538

AUG 0 4 2009

PRODUCT REVISED
as complying with the Florida Building Code
Acceptance No. 09-0825.07
Expiration Date SEPT. 7, 2011
By Manuel Perez
Miami Dade Product Control Division

AL-FAROOQ CORPORATION
ENGINEERS & PRODUCT DEVELOPMENT
1235 S.W. 87 AVE
MIAMI, FLORIDA 33174
TEL. (305) 264-8100 FAX. (305) 262-6978
COMP-ANL\W06-37RC

SERIES HR2600 ALUM HORIZONTAL SLIDING WDW.(S.M.I.)

R.C. ALUMINUM INDUSTRIES INC.
2805 N.W. 75 TH AVE.
MIAMI, FL. 33122
TEL. (305) 592-1515 FAX. (305) 592-2184

revisions:

no	date	by	description
A	07.24.09		NO CHANGE THIS SHEET

date: 06-20-06
scale: 1/2" = 1"
dr. by: HAMID
chk. by:

drawing no.
W06-37

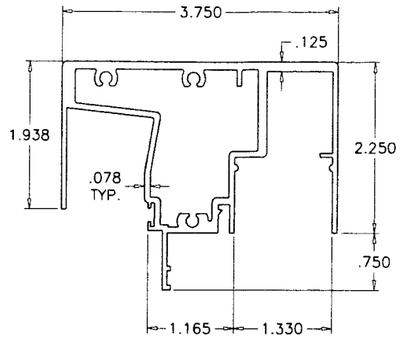

E2 FRAME HEAD

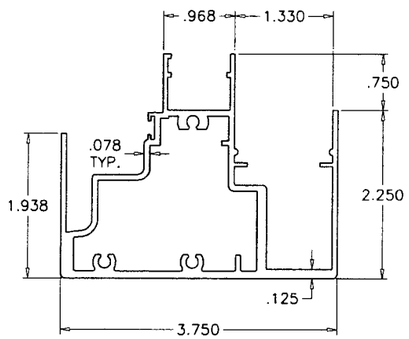

E1 FRAME SILL

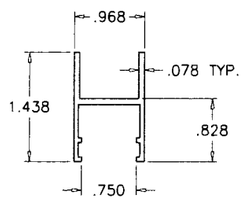

E8 VENT TOP/BOTTOM RAIL

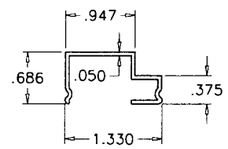

E9 JAMB/SILL ANCHOR COVER

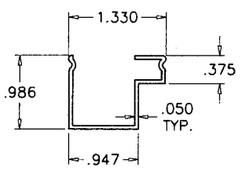

E10 HEAD ANCHOR COVER

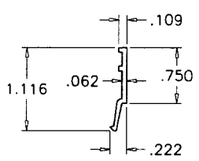

E14 GLAZING BEAD

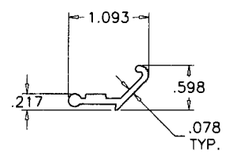

E12 FINGER LOCK

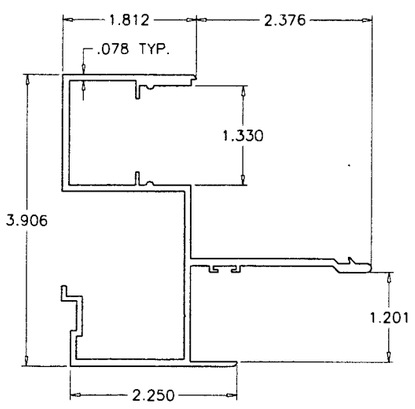

E4 FRAME JAMB @ MOVING SIDE

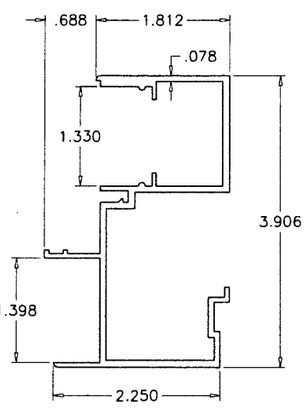

E3 FRAME JAMB @ FIXED SIDE

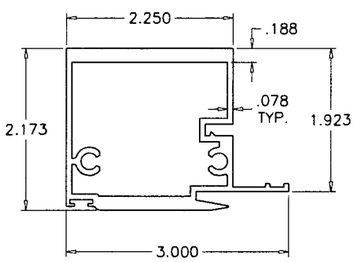

E7 MEETING STILE

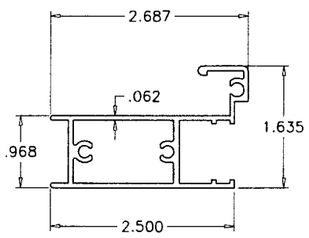

E5 JAMB STILE

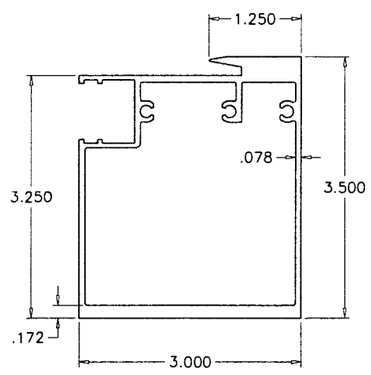

E13 VENT INTERLOCK

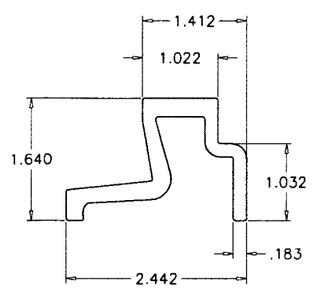

E11 MTG. STILE END SUPPORT

ITEM	PART #	QUANTITY	DESCRIPTION	MATERIAL	MANF./SUPPLIER/REMARKS
E1	HR2600-001	1	FRAME SILL	6005-T5	–
E2	HR2600-002	1	FRAME HEAD	6005-T5	–
E3	HR2600-003	AS REQD.	FRAME JAMB @ FIXED SIDE	6063-T6	–
E4	HR2600-004	AS REQD.	FRAME JAMB @ MOVING SIDE	6063-T6	–
E5	HR2600-005	1/ VENT	JAMB STILE	6063-T6	–
E7	HR2600-007	1/ VENT	FRAME MEETING STILE	6063-T6	–
E8	HR2600-008	2/ VENT	VENT TOP & BOTTOM RAIL	6063-T6	–
E9	HR2600-009	AS REQD.	SILL AND JAMB ANCHOR COVER	6005-T5	–
E10	HR2600-010	AS REQD.	HEAD ANCHOR COVER	6005-T5	–
E11	HR2600-011	AS REQD.	MEETING STILE END SUPPORT, 8" LONG	6005-T5	AT FIX. MTG. RAIL LOCATIONS
E12	HR2600-012	1/ VENT	ALUM FINGER LOCK (3" LONG)	6063-T6	–
E13	HR2600-013	1/ VENT	VENT INTERLOCK	6005-T5	–
E14	500Y-007	AS REQD.	GLAZING BEAD	6063-T6	–
V1	V-068	AS REQD.	MARINE GLAZING	EPDM	–
V2	V-053	AS REQD.	WEDGE GASKET	PVC	–
S1	#10 X 1"	AS REQD.	FRAME ASSEMBLY SCREWS	ST/ST	PH. PHL. SMS POINT "B"
S2	#14 X 3/4"	AS REQD.	MEETING STILE ASSEMBLY SCREWS	ST/ST	PH. SMS POINT "B"
S3	#14 X 1"	2/ SUPPORT	MEETING STILE END SUPPORT ASSEMBLY SCREWS	ST/ST	FH. SMS
S5	#10 X 1"	AS REQD.	VENT ASSEMBLY SCREWS	ST/ST	FH. SMS
M1	Q-270X300	AS REQD.	FABRIC COATED FOAM W'STRIPPING	–	Q-LON
M3	V2100	–	3/8" X 3/16" SINGLE FACE TAPE	–	–
M4	–	3/ FIX. LITE	1/8" X 1/2" X 4" LG. SETTING BLOCK AT SILL	–	AT 6" FROM ENDS & MIDSPAN
M5	P-024	2/ VENT	WHEEL	NYLON	–
M6	P-032	2/ VENT	WHEEL RETAINER HOUSING	PLASTIC	–
M7	RS100-M01	–	KNURLED PIN AXLE	ST/ST	–
M8	66900-001	–	PLASTIC WEEP HOLE FLAP	–	–

Engr: ARSHAD VIQAR
CIVIL
FLA. PE # 38863
C.A.N. 3538

AUG 0 4 2009

PRODUCT REVISED
to complying with the Florida
Building Code
Acceptance No. 09-0825.07
Expiration Date SEPT. 1, 2011
By Manuel Perez
Miami-Dade Product Control
Division

AL-FAROOQ CORPORATION
ENGINEERS & PRODUCT DEVELOPMENT
1235 S.W. 87 AVE
MIAMI, FLORIDA 33174
TEL. (305) 264-8100 FAX. (305) 262-6978
COMP-ANL\W06-37RC

SERIES HR2600 ALUM HORIZONTAL SLIDING WDW.(S.M.I.)

R.C. ALUMINUM INDUSTRIES INC.
2805 N.W. 75 TH AVE.
MIAMI, FL. 33122
TEL. (305) 592-1515 FAX. (305) 592-2184

revisions:

no	date	by	description
A	07.24.09		NO CHANGE THIS SHEET

date: 06-20-06
scale: 1/2" = 1"
dr. by: HAMID
chk. by:

drawing no. W06-37

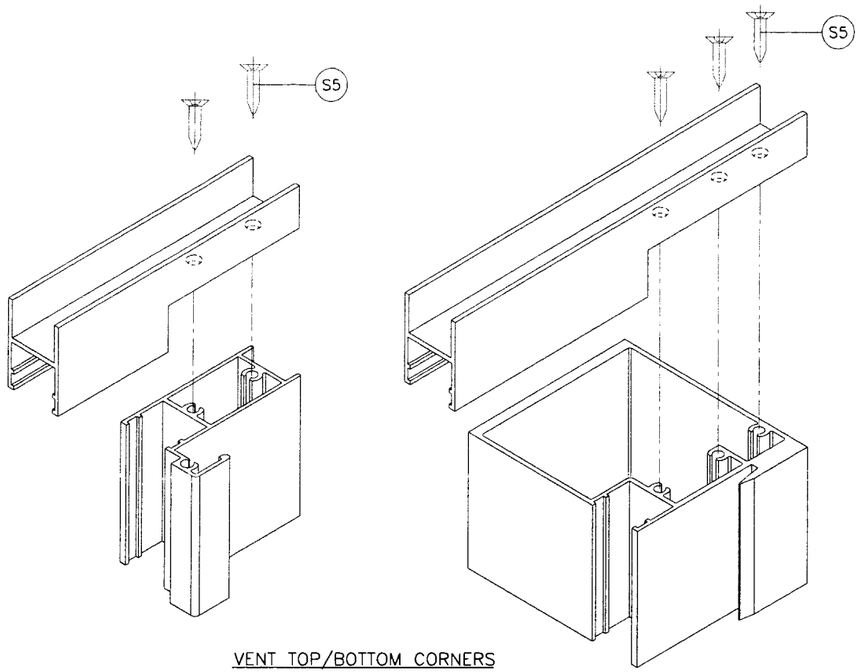

VENT TOP/BOTTOM CORNERS

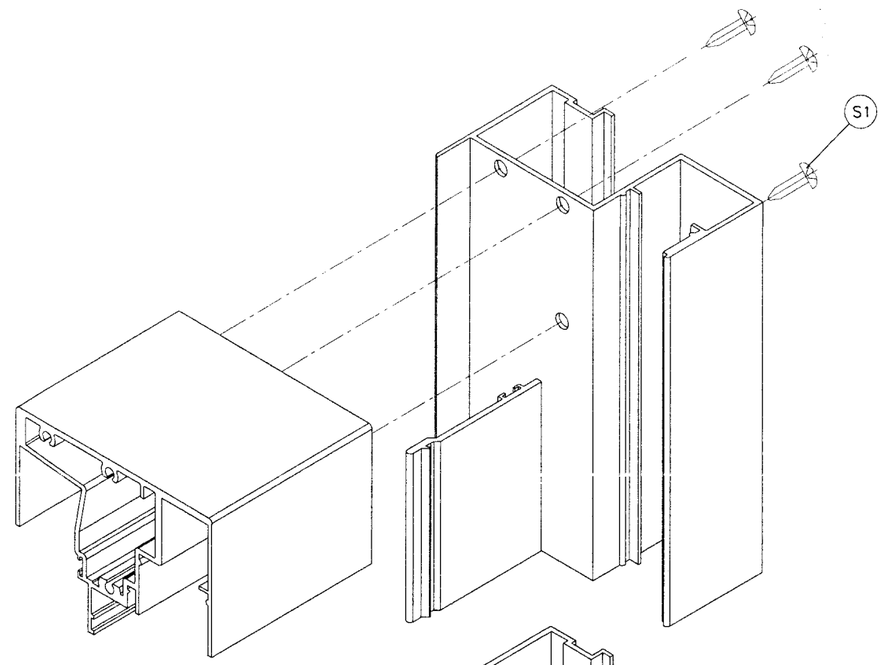

FRAME TOP CORNER

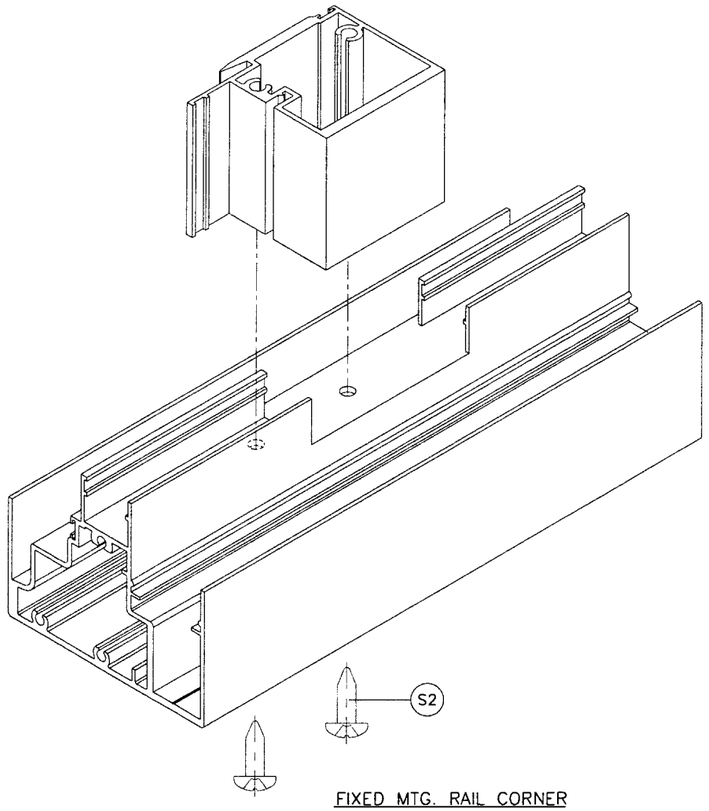

FIXED MTG. RAIL CORNER

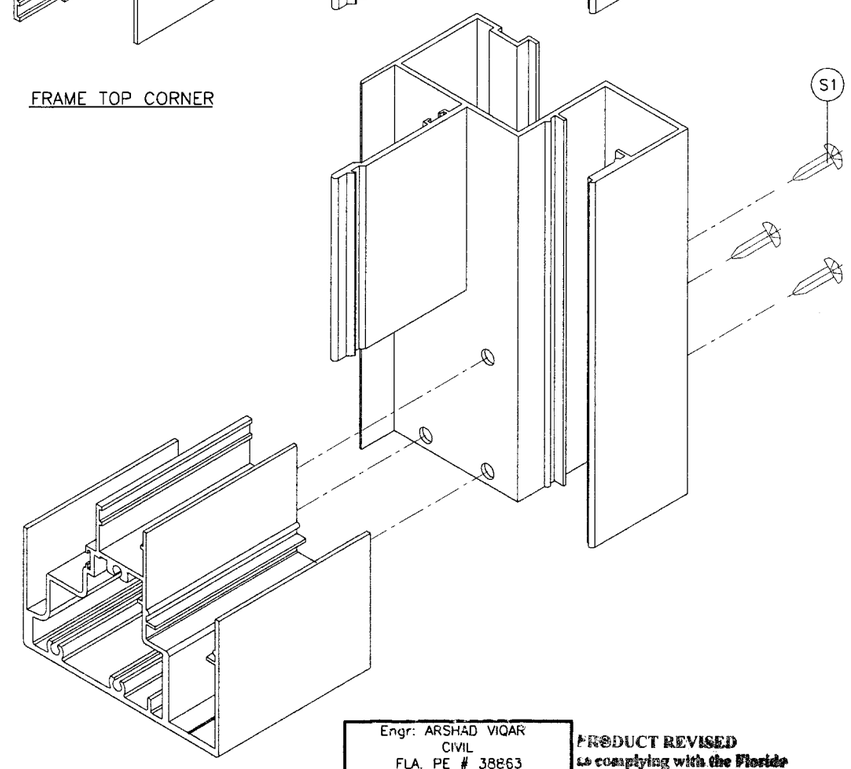

FRAME BOTTOM CORNER

Engr: ARSHAD VIQAR
CIVIL
FLA. PE # 38863
C.A.N. 3538

AUG 0 4 2009

PRODUCT REVISED
is complying with the Florida
Building Code
Acceptance No. 09-0825.07
Expiration Date SEPT. 7, 2011
By Manuel Perez
Miami-Dade Product Control
Division

AL-FAROOQ CORPORATION
ENGINEERS & PRODUCT DEVELOPMENT
1235 S.W. 87 AVE
MIAMI, FLORIDA 33174
TEL. (305) 264-8100 FAX. (305) 262-6978

COMP-ANL\W06-37RC

SERIES HR2600 ALUM HORIZONTAL SLIDING WDW.(S.M.I.)

R.C. ALUMINUM INDUSTRIES INC.
2805 N.W. 75 TH AVE.
MIAMI, FL. 33122
TEL. (305) 592-1515 FAX. (305) 592-2184

revisions:

no	date	by	description
A	07.24.09		NO CHANGE THIS SHEET

date: 06-20-06
scale: 1/2" = 1"
dr. by: HAMID
chk. by:

drawing no.
W06-37

sheet 7 of 7