MIAMI-DADE COUNTY
BUILDING CODE COMPLIANCE OFFICE (BCCO)
PRODUCT CONTROL DIVISION

MIAMI-DADE COUNTY, FLORIDA
METRO-DADE FLAGLER BUILDING
140 WEST FLAGLER STREET, SUITE 1603
MIAMI, FLORIDA 33130-1563
(305) 375-2901 FAX (305) 372-6339
www.miamidade.gov/buildingcode

NOTICE OF ACCEPTANCE (NOA)

Overhead Door Corporation
2501 South State Hwy 121, Suite 200
Lewisville, TX 75067

SCOPE:

This NOA is being issued under the applicable rules and regulations governing the use of construction materials. The documentation submitted has been reviewed by Miami-Dade County Product Control Division and accepted by the Board of Rules and Appeals (BORA) to be used in Miami Dade County and other areas where allowed by the Authority Having Jurisdiction (AHJ).

This NOA shall not be valid after the expiration date stated below. The Miami-Dade County Product Control Division (In Miami Dade County) and/or the AHJ (in areas other than Miami Dade County) reserve the right to have this product or material tested for quality assurance purposes. If this product or material fails to perform in the accepted manner, the manufacturer will incur the expense of such testing and the AHJ may immediately revoke, modify, or suspend the use of such product or material within their jurisdiction. BORA reserves the right to revoke this acceptance, if it is determined by Miami-Dade County Product Control Division that this product or material fails to meet the requirements of the applicable building code.

This product is approved as described herein, and has been designed to comply with the Florida Building Code, including the High Velocity Hurricane Zone.

DESCRIPTION: Series "635" Steel Roll-up Door 14'-0" Wide

APPROVAL DOCUMENT: Drawing No. **D-308232**, titled "Series 635, Rolling Fire Door 14' Miami-Dade County", Sheets 1 and 2 of 2, dated 09/23/09, prepared by Overhead Door Corporation, signed and sealed by LeRoy G. Krupke, P.E., bearing the Miami-Dade County Product Control approval stamp with the Notice of Acceptance number and approval date by the Miami-Dade County Product Control Division.

MISSILE IMPACT RATING: Large and Small Missile Impact Resistant

LABELING: Each unit shall bear a permanent label with the manufacturer's name or logo, city, state and following statement: "Miami-Dade County Product Control Approved", unless otherwise noted herein.

RENEWAL of this NOA shall be considered after a renewal application has been filed and there has been no change in the applicable building code negatively affecting the performance of this product.

TERMINATION of this NOA will occur after the expiration date or if there has been a revision or change in the materials, use, and/or manufacture of the product or process. Misuse of this NOA as an endorsement of any product, for sales, advertising or any other purposes shall automatically terminate this NOA. Failure to comply with any section of this NOA shall be cause for termination and removal of NOA.

ADVERTISEMENT: The NOA number preceded by the words Miami-Dade County, Florida, and followed by the expiration date may be displayed in advertising literature. If any portion of the NOA is displayed, then it shall be done in its entirety.

INSPECTION: A copy of this entire NOA shall be provided to the user by the manufacturer or its distributors and shall be available for inspection at the job site at the request of the Building Official.

This NOA consists of this page 1 and evidence page E-1, as well as approval document mentioned above.

The submitted documentation was reviewed by **Carlos M. Utrera, P.E.**

MIAMI-DADE COUNTY APPROVED

11/10/09

NOA No. 09-0826.06
Expiration Date: December 02, 2014
Approval Date: December 02, 2009

NOTICE OF ACCEPTANCE: EVIDENCE SUBMITTED

A. DRAWINGS

1. Drawing No. **D-308232**, titled "Series 635, Rolling Fire Door 14' Miami-Dade County", Sheets 1 and 2 of 2, dated 09/23/09, prepared by Overhead Door Corporation, signed and sealed by LeRoy G. Krupke, P.E.

B. TESTS

1. Test reports on 1) Uniform Static Air Pressure Test, Loading per FBC, TAS 202-94
   2) Large Missile Impact Test per FBC, TAS 201-94
   3) Cyclic Wind Pressure Loading per FBC, TAS 203-94
   4) Forced Entry Test, per FBC 2411 3.2.1, TAS 202-94
   5) Tensile Test per ASTM E8-01,

   Along with marked-up drawings and installation diagram of Series/Model 635 Rolling Fire Doors, prepared by Architectural Testing, Inc., Test Report No. **89469.01-109-18**, dated 05/26/09, with Revision 1 dated 10/14/09, signed and sealed by Michael D. Stremmel, P.E.
2. Test report on Salt Exposure Fog of G30, G40 & G90 Coupons per ASTM B-117, prepared by Environmental Testing Laboratory, Inc., Test Report # **9100550287,** dated 03/13/06, signed by Brady Richard.
3. Test report # 3061869-001r1 on Surface Burning characteristics per ASTM E84 on slats insulated with 2lb polyurethane foam, prepared by Intertek, dated 07/13/04 and signed by J. Tanner. ***"Submitted under NOA # 09-0324.08"***
4. Test report # 17042-120730 of Ignition Properties per ASTM D1929 on Polyurethane Foam insulation, prepared by Omega Point Laboratories, dated 09/12/04, signed and sealed by W. E. Fith, P.E. ***"Submitted under NOA # 09-0324.08"***

C. CALCULATIONS

1. Wall fastener calculations for Drawing D-308232-14' wide 635 Series Rolling Doors for 65 psf, Sheets 1 through 6 of 6, dated 08/21/09, prepared by Overhead Door Corporation, signed and sealed by LeRoy G. Krupke, P.E.

D. QUALITY ASSURANCE

1. Miami Dade Building Code Compliance Office (BCCO)

E. MATERIAL CERTIFICATIONS

1. None.

F. STATEMENTS

1. Statement letter of code conformance and no financial interest, issued by Overhead Door Corporation, dated 08/21/09, signed and sealed by LeRoy G. Krupke, P.E.
2. Statement letter of code conformance, issued by Architectural Testing, Inc., dated 05/27/09, signed and sealed by LeRoy G. Krupke, P.E.

11/10/09

Carlos M. Utrera, P.E.
Product Control Examiner
NOA No. 09-0826.06
Expiration Date: December 02, 2014
Approval Date: December 02, 2009

NOTES

1. (−W/L) = NEGATIVE WINDLOAD
   (+W/L) = POSITIVE WINDLOAD
2. WALL ANGLES MAY BE WELDED TO STEEL JAMB.
   USE MIN 60XX ELECTRODE
   SEE SHEET 2 FOR WELD DETAIL
3. RATED DESIGN LOAD ±65 PSF.
4. CURTAIN MATERIAL: ASTM A−653
   GUIDE MATERIAL: ASTM A−36
5. CURTAIN MATERIAL SHALL BE GALVANIZED ACCORDING TO ASTM A−653 TO G60 (MINIMUM).
6. THE DOOR MUST BE INSTALLED WITH THE TENSION WHEEL FACING THE INSIDE OF THE BUILDING.
7. SLIDE BOLTS MUST BE ENGAGED AND CHAIN MUST BE HOOKED WHEN HURRICANE WINDS ARE ANNOUNCED
8. WINDLOCK MATERIAL: LOW CARBON CAST STEEL, GRADE 70−46 (485−250) PER ASTM A27. MIN TENSILE 70−KSI MIN YIELD 36−KSI. MIN ELONG 22%
9. WINDLOCKS ATTACHED TO EACH SLAT (CONTINUOUS)
10. RIVET SPECIFICATIONS:

RIVET SIZE	ULTIMATE STRENGTH GRADE 30 MIN LBS	
	SHEAR	TENSION
1/4	1000	1240

11. OPERATING (ROLL−UP) MECHANISM IS NOT INCLUDED IN THIS APPROVAL. IT MUST BE CERTIFIED BY AN INDEPENDANT TESTING AGENCY, IF REQUIRED.

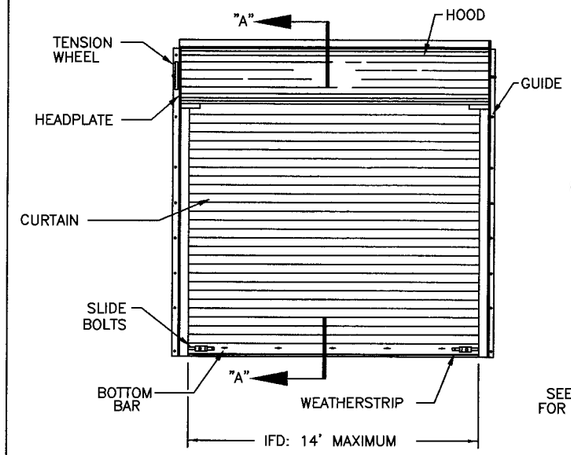

FRONT ELEVATION

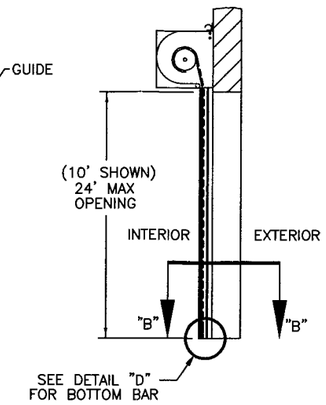

SECTION "A−A"

SHEET REVISION RECORD		
	2	1
	A	A

REVISIONS

LETTER	DESCRIPTION	DATE	APPROVAL
–	RFP PER ER 500195	9/23/09	SFT
A	REV PER ER 500300		

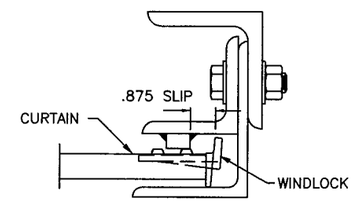

WINDLOCK/WINDBAR RELATIONSHIP DETAIL

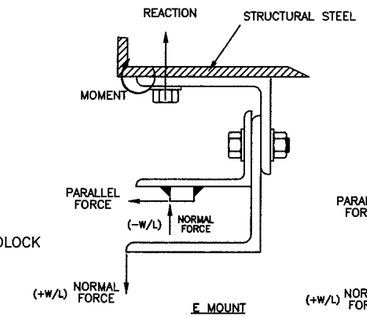

E MOUNT

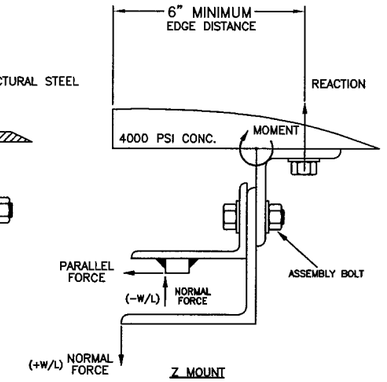

Z MOUNT

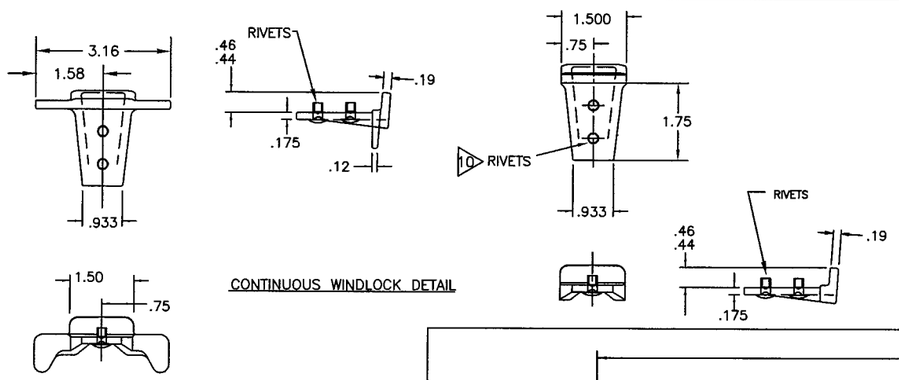

CONTINUOUS WINDLOCK DETAIL

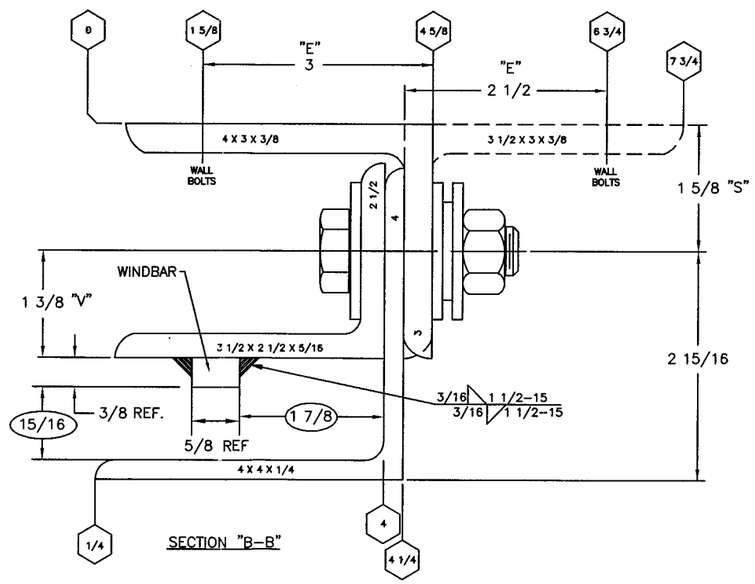

SECTION "B−B"

JAMB LOAD SUMMARY TABLE

LBS/FT DOOR HEIGHT	(E−MOUNT) LOADS	(Z−MOUNT) LOADS
REACTION	3442	5012
NORMAL	455	455
PARALLEL	1003	1003

FASTENER SUMMARY TABLE

	ASSEMBLY BOLT	WALL BOLT STEEL JAMB	WALL BOLT * CONCRETE JAMB
F−265	5/8" GRADE 5, 18" O.C.	1/2" GRADE 5, 12" O.C.	5/8", 4 " EMB POWERS WEDGE BOLT, OR 5/8" 4" EMB HILTI KWIK BOLT 3 8" O.C.

* 4000 PSI MINIMUM AND 6" EDGE DISTANCE FOR ANCHORS

Approved as complying with the Florida Building Code
Date 12/02/2009
NOA# 09-0826.06
Miami Dade Product Control Division
By

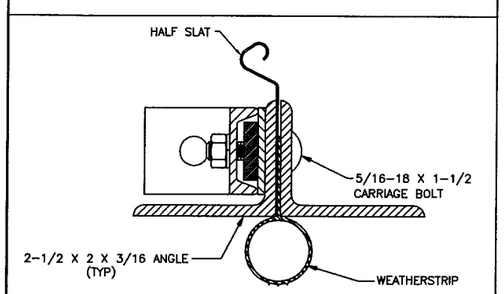

SECTION "C−C"

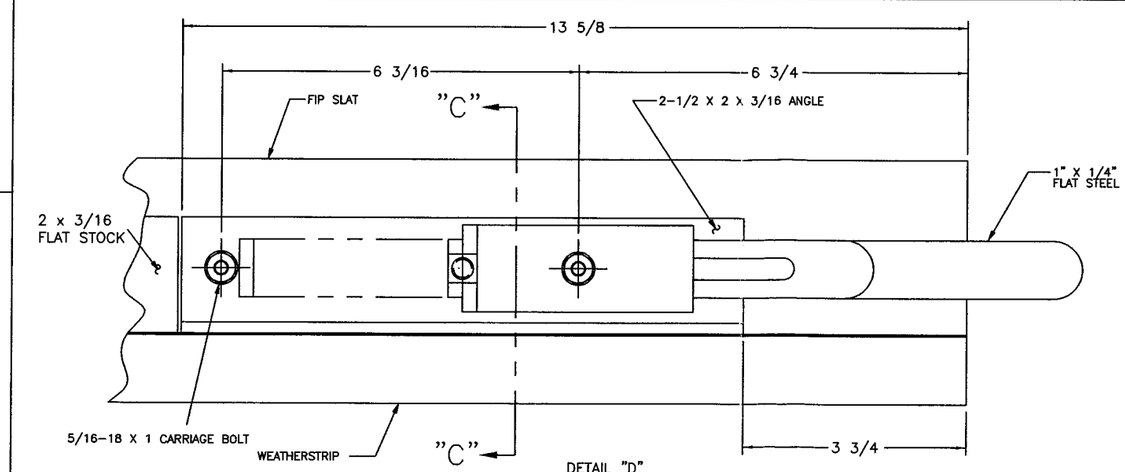

DETAIL "D"
BOTTOM BAR

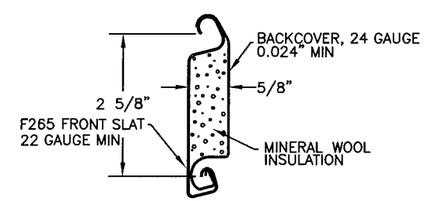

FIP SLAT

FRONT SLAT GAUGE OPTIONS: 22**, 20, 18
** TESTED IN ACCORDANCE WITH DADE COUNTY PROTOCOLS TAS 201−94, TAS 202−94, AND TAS 203−94

10-30-09

OVERHEAD DOOR CORPORATION
2501 SOUTH STATE HWY 121 BUSINESS
LEWISVILLE, TX 75067
LeROY G. KRUPKE, P.E. #36580

UNLESS OTHERWISE SPECIFIED						NAME	DATE	DRAWING TITLE:
DIMENSIONS ARE IN INCHES; TOLERANCES ON DECIMAL DIMENSIONS .XX= ± .03 .XXX= ± .005	HOLE DIAMETERS UNDER .251 +.004−.003 .251 TO .500 +.006−.003 OVER .500 +.008−.003	ANGLES ± 0° 30' FRACTIONS ± 1/16"	OVERHEAD DOOR the original since 1921 DALLAS, TEXAS	MATERIAL:		DRAWN BY: D WARNER	2/26/09	SERIES 635, ROLLING FIRE DOOR 14' MIAMI−DADE COUNTY
				APPLIED FINISH:	UNIT OF MEASURE: N/A	CHECKED BY: M SAWICKI	8/24/09	DRAWING NUMBER D−308232
						APPROVED BY: S FOENG	9/23/09	SCALE: NONE SHEET 1 OF 2

NOTES

1. MATERIAL: ALUMINUM 3003 H14 (0.03 THICK) WITH TRANSPARENT KELSTRIP COVERING.
2. COLOR: HANSCHY RED CS 2311.
3. SOURCE: OHD ADVERTISING AND MERCHANDISING
   1900 CROWN DRIVE
   FARMERS BRANCH, TX 75234
4. STAMP FACTORY ORDER NUMBER HERE.
5. A LETTER MUST BE STAMPED ON ROLLING FIRE DOORS TO IDENTIFY MANUFACTURING PLANT (I.E., USE "P" FOR PENNSYLVANIA).
6. FASTENER FOR TAG IS P/N 080276-1004(STEEL DRIVE SCREW). TAG WILL BE MOUNTED IN THE MIDDLE OF THE BOTTOM BAR.
7. STAMP SLAT TYPE HERE.
8. STAMP ACCEPTANCE NUMBER HERE.

REVISIONS

LETTER	DESCRIPTION	DATE	APPROVAL
–	RFP PER ER 500195	9/23/09	SFT
A	REV PER ER 500300		

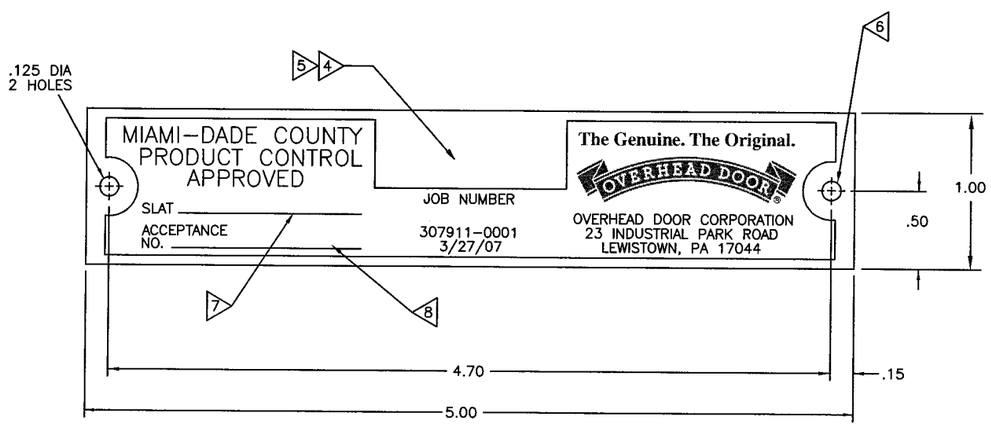

P/N 307911-0001 – DADE CO. APPROVAL TAG, ROLLING DOORS & GRILLES

SCALE: 2/1

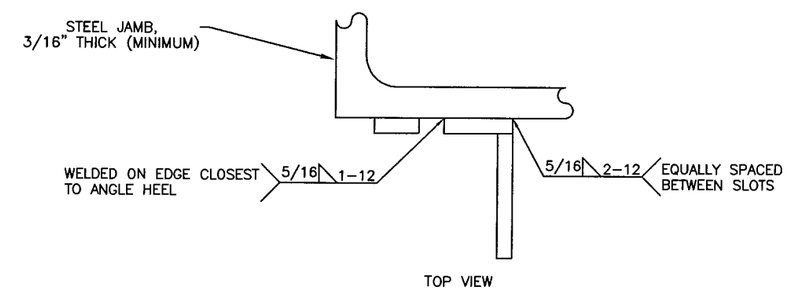

TOP VIEW

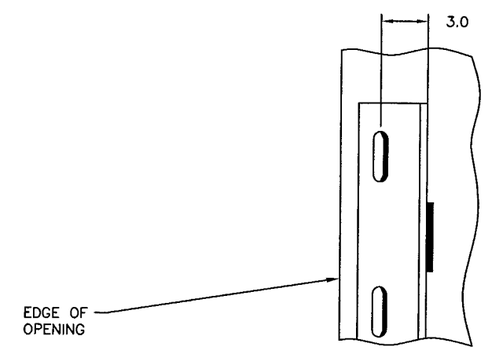

FRONT VIEW
OF WALL ANGLE

DETAILS FOR WELDING "E" GUIDES TO STEEL JAMBS

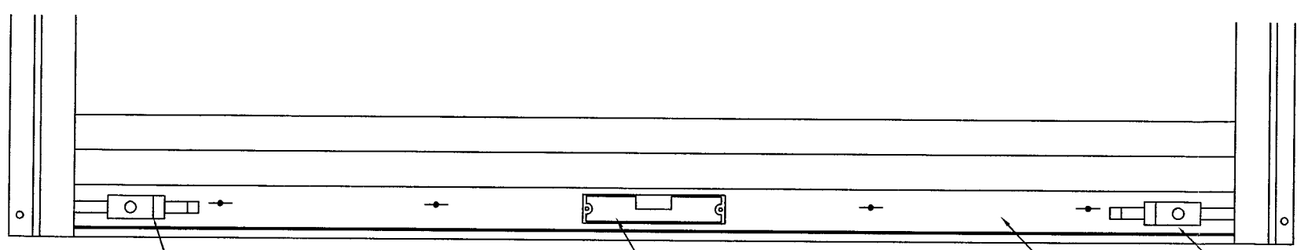

DETAIL "E" 6

SCALE: 4/1

Approved as complying with the Florida Building Code
Date 12/02/2009
NOA# 09-0826.06
Miami Dade Product Control Division
By

10-30-09

OVERHEAD DOOR CORPORATION
2501 SOUTH STATE HWY 121 BUSINESS
LEWISVILLE, TX 75067
LeROY G. KRUPKE, P.E. #36580

UNLESS OTHERWISE SPECIFIED					NAME	DATE	DRAWING TITLE:
DIMENSIONS ARE IN INCHES; TOLERANCES ON			OVERHEAD DOOR the original since 1921	DALLAS, TEXAS	DRAWN BY: D WARNER	2/26/09	SERIES 635, ROLLING FIRE DOOR 14' MIAMI-DADE COUNTY
DECIMAL DIMENSIONS	HOLE DIAMETERS	ANGLES ± 0° 30'	MATERIAL: 4		CHECKED BY: M SAWICKI	8/24/09	DRAWING NUMBER D-308232
.XX= ± .03 .XXX= ± .005	UNDER .251 +.004-.003 .251 TO .500 +.006-.002 OVER .500 +.008-.003	FRACTIONS ± 1/16"	APPLIED FINISH: 5	UNIT OF MEASURE: N/A	APPROVED BY: S FOENG	9/23/09	SCALE: NONE SHEET 2 OF 2