MIAMI-DADE

BUILDING CODE COMPLIANCE OFFICE (BCCO)
PRODUCT CONTROL DIVISION

MIAMI-DADE COUNTY, FLORIDA
METRO-DADE FLAGLER BUILDING
140 WEST FLAGLER STREET, SUITE 1603
MIAMI, FLORIDA 33130-1563
(305) 375-2901 FAX (305) 375-2908

NOTICE OF ACCEPTANCE (NOA)

Weather Shield Manufacturing, Inc.
1 Weather Shield Plaza (P O Box 309)
Medford, WI 54451

SCOPE:
This NOA is being issued under the applicable rules and regulations governing the use of construction materials. The documentation submitted has been reviewed by Miami-Dade County Product Control Division and accepted by the Board of Rules and Appeals (BORA) to be used in Miami Dade County and other areas where allowed by the Authority Having Jurisdiction (AHJ).

This NOA shall not be valid after the expiration date stated below. The Miami-Dade County Product Control Division (In Miami Dade County) and/or the AHJ (in areas other than Miami Dade County) reserve the right to have this product or material tested for quality assurance purposes. If this product or material fails to perform in the accepted manner, the manufacturer will incur the expense of such testing and the AHJ may immediately revoke, modify, or suspend the use of such product or material within their jurisdiction. BORA reserves the right to revoke this acceptance, if it is determined by Miami-Dade County Product Control Division that this product or material fails to meet the requirements of the applicable building code.

This product is approved as described herein, and has been designed to comply with the High Velocity Hurricane Zone of the Florida Building Code.

DESCRIPTION: Aluminum Tube Mullion – Impact Resistant

APPROVAL DOCUMENT: Drawing No. **1580**, titled "Aluminum Tube Clipped Mullion", sheet 1 thru 9 of 9, dated 08/20/09, prepared by W.W. Schaefer Engineering & Consulting, P. A., signed and sealed by Warren W. Schaefer, P.E., bearing the Miami-Dade County Product Control Revised stamp with the Notice of Acceptance number and expiration date by the Miami-Dade County Product Control Division.

MISSILE IMPACT RATING: Large and Small Missile Impact Resistant

LABELING: Each unit shall bear a permanent label with the manufacturer's name or logo, city, state and following statement: "Miami-Dade County Product Control Approved", unless otherwise noted herein.

RENEWAL of this NOA shall be considered after a renewal application has been filed and there has been no change in the applicable building code negatively affecting the performance of this product.

TERMINATION of this NOA will occur after the expiration date or if there has been a revision or change in the materials, use, and/or manufacture of the product or process. Misuse of this NOA as an endorsement of any product, for sales, advertising or any other purposes shall automatically terminate this NOA. Failure to comply with any section of this NOA shall be cause for termination and removal of NOA.

ADVERTISEMENT: The NOA number preceded by the words Miami-Dade County, Florida, and followed by the expiration date may be displayed in advertising literature. If any portion of the NOA is displayed, then it shall be done in its entirety.

INSPECTION: A copy of this entire NOA shall be provided to the user by the manufacturer or its distributors and shall be available for inspection at the job site at the request of the Building Official.
This NOA **renews and revises NOA # 08-0512.14** and consists of this page 1 and evidence pages E-1 and E-2 as well as approval document mentioned above.
The submitted documentation was reviewed by **Fitz A. Harris, P.E.**

MIAMI-DADE COUNTY APPROVED

Fitz A. Harris

NOA No 09-0826.08
Expiration Date: July 17, 2014
Approval Date: October 21 2009

Weather Shield Manufacturing, Inc.

NOTICE OF ACCEPTANCE: EVIDENCE SUBMITTED

(For File ONLY. Not part of NOA)

A. DRAWINGS

1. Manufacturer's die drawings and sections.
2. Drawing No. **1580**, titled "Aluminum Tube Clipped Mullion", prepared by W.W. Schafer Engineering & Consulting, P.A., dated August 20, 2009 signed and sealed by Warren W. Schaefer, P.E.

B. TESTS

1. **Test reports on 1)** Large Missile Impact Test per TAS 201
   2) Uniform Static Air Pressure Test per TAS202
   3) Cyclic Wind Pressure Test, per TAS 203
   prepared by Stork Twin City Testing Corporation , Tesr report No. 180-7854 dated 5/14/09, signed and sealed by Tom Kolden P.E..

(Test report submitted under original file No.98-1110.07)

2. Test reports on1) Large Missile Impact Test, per PA 201-94
   2) Cyclic Wind Pressure Test,, per PA 203-94
   prepared by Hurricane Testing Laboratory, Inc., Test report No. **HTL-0037-0304-98**, dated 03/05/98, signed and sealed by Timothy S. Marshall, P.E.

(Test reports submitted under original file No. 96-0725.07)

3. Test reports on 1) Uniform Static Air Pressure Test, Loading per PA 202-94 along with installation diagram of window prepared by Hurricane Engineering & Testing Inc., Test Report No. **ATI-19399-N**, dated February 17, 1997 signed and sealed by Allen N. Reeves, P.E.

C. CALCULATIONS

1. Structural mullion and anchorage calculations prepared by W.W. Schaefer Engineering & Consulting, P.A. dated 08/19/2009, signed and sealed by Warren W. Schaefer, P.E.

D. MATERIAL CERTIFICATIONS

1. None.

E. STATEMENTS

1. Letter of conformance with 2007 FBC dated 8/19/2009 signed and sealed by Warren W. Schaefer, P.E.
2. Letter of No Financial Interest dated 8/19/2009 signed and sealed by Warren .W. Schaefer, P.E.

Fitz A. Harris, P.E.
Product Control Examiner
NOA No 09-0826.08
Expiration Date: July 17, 2014
Approval Date : October 21, 2009

Weather Shield Manufacturing, Inc.

NOTICE OF ACCEPTANCE: EVIDENCE SUBMITTED
(For File ONLY. Not part of NOA)

F. OTHER

1 This NOA renews and revises Notice of Acceptance No. **08-0512.07**, which was issued on 09/18/08, and expires on 07/17/09.

2. The following results were obtained in the original submittal No. 96-0725.07:

TEST		TEST LOADS	DESIGN LOADS
UNIFORM STATIC PRESSURE SFBC PA 202-94 POSITIVE	AT DESIGN LOADS	+54.0 PSF ATI-19399-N	+54.0 PSF ATI-19399-N
UNIFORM STATIC PRESSURE ASTM E330 PA 202-94 POSITIVE	AT FULL TEST LOAD	+81.0 PSF ATI-19399-N	+81.0 PSF ATI-19399-N
This is a verification test only. For Design Pressure Rating vs. Mullion length, and for Design Pressure Rating vs. Anchor type, see "Load Tables" and "Mullion End Connection Details' on sheets 4,5,6 &3 of 6 of Drawing No. 1580, bearing the Dade County Product Control approval stamp.			

Fitz A. Harris

Fitz A. Harris, P.E.
Product Control Examiner
NOA No 09-0826.08
Expiration Date: July 17, 2014
Approval Date : October 21, 2009

NOTE: THIS MULLION DRAWING IS ACCEPTABLE FOR USE WITH WEATHER SHIELD PRODUCTS ONLY & MAY NOT BE USED WITH ANY OTHER MANUFACTURER'S PRODUCTS.

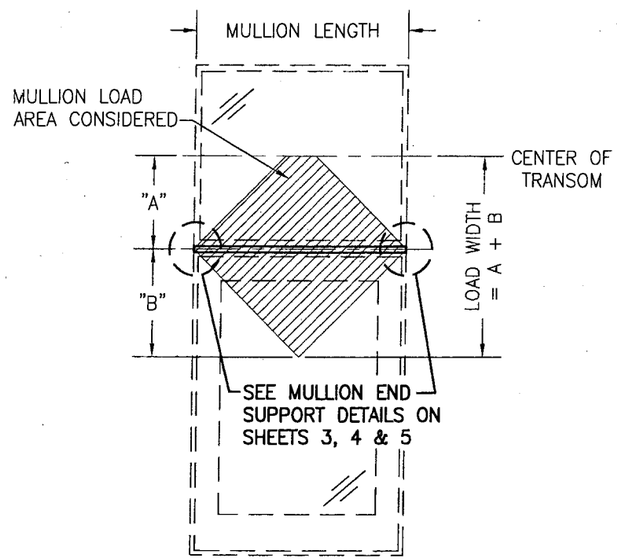

"A" = LESSER OF (MULLION LENGTH/2) OR (TRANSOM HEIGHT/2)
"B" = MULLION LENGTH/2

SINGLE WINDOW OR DOOR WITH FIXED TRANSOM
(SEE LOAD TABLE 1.0)

NOTE: WINDOW/DOOR MAY BE ANY FIXED OR OPERABLE UNIT

NOTE: MULLION MAY BE HORIZONTAL OR VERTICAL

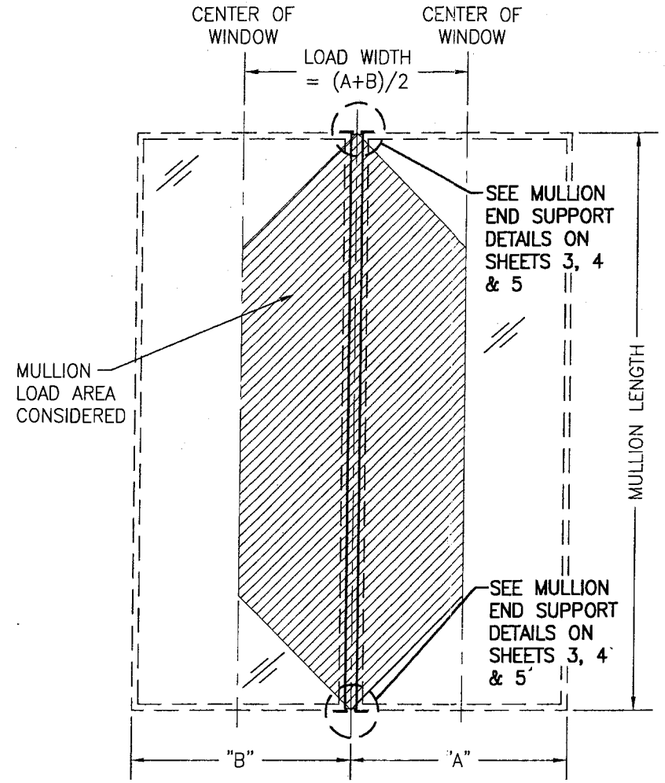

FIXED WINDOW TO FIXED WINDOW WHEN WINDOW WIDTHS ARE LESS THAN OR EQUAL TO THE MULLION LENGTH
(SEE LOAD TABLE 1.0)

NOTE: MULLION MAY BE HORIZONTAL OR VERTICAL

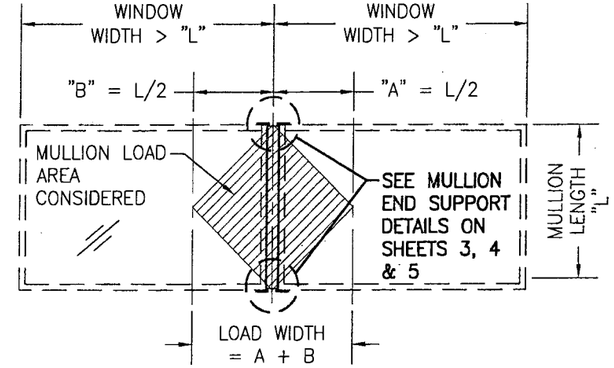

FIXED WINDOW TO FIXED WINDOW WHEN WINDOW WIDTHS ARE GREATER THAN THE MULLION LENGTH
(SEE LOAD TABLE 1.0)

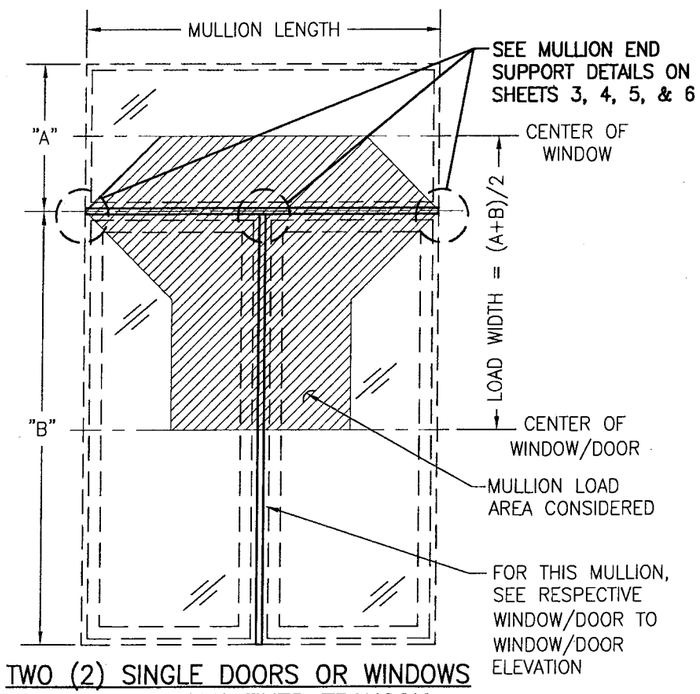

TWO (2) SINGLE DOORS OR WINDOWS WITH A SINGLE FIXED TRANSOM
(SEE LOAD TABLE 2.0)

NOTE: DOORS/WINDOWS MAY BE OPERABLE OR FIXED.

GENERAL NOTES (ALL DRAWING SHEETS):

1. DOORS & WINDOWS SHALL BE UNDER SEPERATE CERTIFICATION. SEE THE PRODUCTS SPECIFIC CERTIFICATION FOR THEIR USE.
2. THESE MULLION SYSTEMS HAVE BEEN ANALYZED AND CERTIFIED FOR DESIGN PRESSURES NOT TO EXCEED THOSE SHOWN IN THE LOAD TABLES.
3. OPENINGS, INCLUDING BUCKS (IF USED AS SUPPORT), MUST BE DESIGNED & CONSTRUCTED TO WITHSTAND WIND LOADS TRANSFERRED BY THE MULLIONS END REACTIONS & SUPPORTED WINDOWS/DOORS.
4. ALL MATERIALS & FASTENERS SHALL BE IN ACCORDANCE WITH THESE DRAWINGS & MAY NOT VARY UNLESS SPECIFICALLY MENTIONED ON THE DRAWINGS.
5. THESE MULLION SYSTEMS HAVE BEEN DESIGNED IN ACCORDANCE WITH THE FLORIDA BUILDING CODE (FBC) INCLUDING HIGH VELOCITY HURRICANE ZONES (HVHZ).
6. ANY CERTIFIED WINDOW/DOOR BY WEATHER SHIELD WINDOWS & DOORS MAY BE SUPPORTED BY THESE MULLIONS PROVIDING THEY ARE PROPERLY ANCHORED TO THE MULLION.
7. ALLOWABLE PRESSURE ON THE MULLED UNIT SHALL BE CONTROLLED BY THE LESSER ALLOWABLE PRESSURE OF THE MULLION, THE MULLION END CONNECTION OR THE INDIVIDUAL DOOR/WINDOW UNITS.
8. WINDOW/DOOR SIZES SHALL BE AS RESTRICTED BY THEIR OWN INDIVIDUAL APPROVALS/CERTIFICATIONS.
9. FOR WINDOW OR DOOR FRAME TO OPENING ATTACHMENT, SEE THE RESPECTIVE PRODUCT CERTIFIED DRAWINGS/SPECIFICATIONS FOR THE WINDOW/DOOR.
10. MULLION LENGTHS ARE RESTRICTED BY THOSE SHOWN IN THE TABLES.
11. THE LOADS IN THESE TABLES CONSIDER WORSE CASE OF MULLION STRESS, DEFLECTION AND END REACTION.
12. ANY CONDITIONS NOT COVERED IN THIS CERTIFICATION SHALL BE SUBJECT TO SEPERATE ENGINEERING REVIEW.
13. ALL TUBES SHALL BE 6063–T6 ALUMINUM. ALL CONNECTION ANGLES SHALL BE MIN. 6063–T5 ALUMINUM. ALL U–CLIPS & T–CLIPS SHALL BE MIN. 6063–T5 OR T6 ALUMINUM.
14. ALL EMBEDMENTS SPECIFIED ARE TO BE BEYOND WALL FINISH.
15. MULLION TUBES MUST BE CONTINUOUS FROM END TO END.
16. TO INSURE THAT THE DEAD WEIGHT OF THE ABOVE WINDOWS WILL NOT CAUSE UNDO STRESS ON THE BELOW WINDOWS/DOORS, WHEN VERTICALLY STACKED, THE MANUFACTURER/INSTALLER SHALL LIMIT THE SAG OF THE HORIZONTAL MULLION TO 1/8" BETWEEN ANY 2 VERTICAL SUPPORTS OF THAT MULLION.
17. THESE MULLIONS ARE ACCEPTABLE FOR USE WITH IMPACT & NON–IMPACTED RATED WINDOWS & DOORS.
18. ALL ANCHORS SPECIFIED HERE–IN THAT ARE TO PENETRATE PRESSURE TREATED (P.T.) LUMBER SHALL BE OF A MATERIAL CAPABLE OF RESISTING CORROSION CAUSED BY THE PRESSURE TREATING CHEMICALS IN THE WOOD.
19. MATERIALS, INCLUDING BUT NOT LIMITED TO STEEL SCREWS, THAT COME INTO CONTACT WITH OTHER DISSIMILAR MATERIALS SHALL MEET THE REQUIREMENTS OF FLORIDA BUILDING CODE CHAPTER 20.

NOTE: ATTACHMENT OF WINDOW/DOOR FRAME TO MULLIONS SHALL BE AS REQUIRED BY THE INDIVIDUAL WINDOW/DOOR N.O.A. FOR ATTACHMENT TO BUCK/OPENING EXCEPT THAT SPECIFIED FRAME SCREWS MUST BE EQUILAVENT SIZE SMS SCREWS PREDILLED INTO TUBE OR SELF TAPPING/DRILLING SCREWS

PRODUCT REVIEWED as complying with the Florida Building Code
Acceptance No 09-0826.08
Expiration Date 7-17-2014
By [signature]
Miami Dade Product Control Division

DRAWN BY: W.W.S.	CHECKED BY: W.W.S.
PLOT: 1=24	DATE: 06/20/09

NO.	REVISION DESCRIPTION	BY	DATE

DRAWING TITLE: ALUMINUM TUBE CLIPPED MULLIONS

MANUFACTURER: WEATHER SHIELD WINDOWS & DOORS
ONE WEATHER SHIELD PLAZA
MEDFORD, WI 54451
715–748–6555

CONSULTANTS: W. W. SCHAEFER ENGINEERING & CONSULTING, P.A.
8695 N. MILITARY TRAIL; SUITE C–204
PALM BEACH GARDENS, FL 33410
PHONE: 561–775–4902 FAX: 561–775–4903

CERTIFICATION
AUG 21 2009
WARREN W. SCHAEFER, P.E.
P.E. NO. 44135

DRAWING NO. 1580 REV.

SHEET NO. 1 OF 9

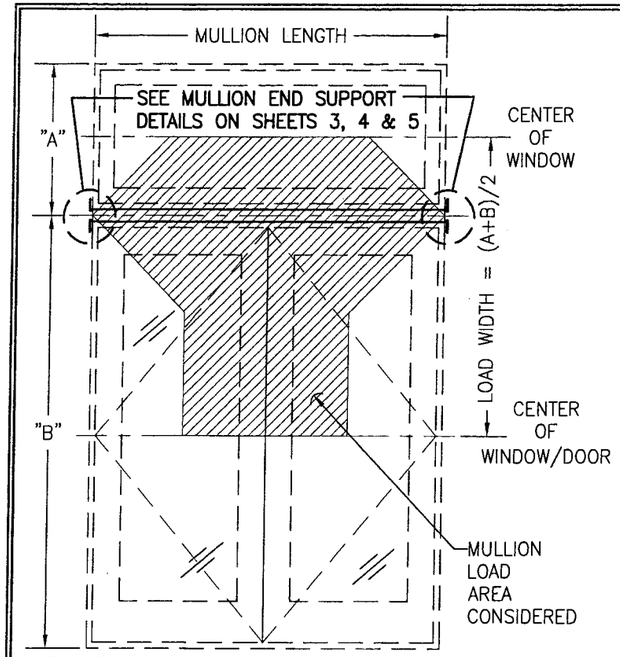

DOUBLE PANEL DOOR OR CASEMENT WINDOW WITH A SINGLE FIXED TRANSOM
(SEE LOAD TABLE 2.0)

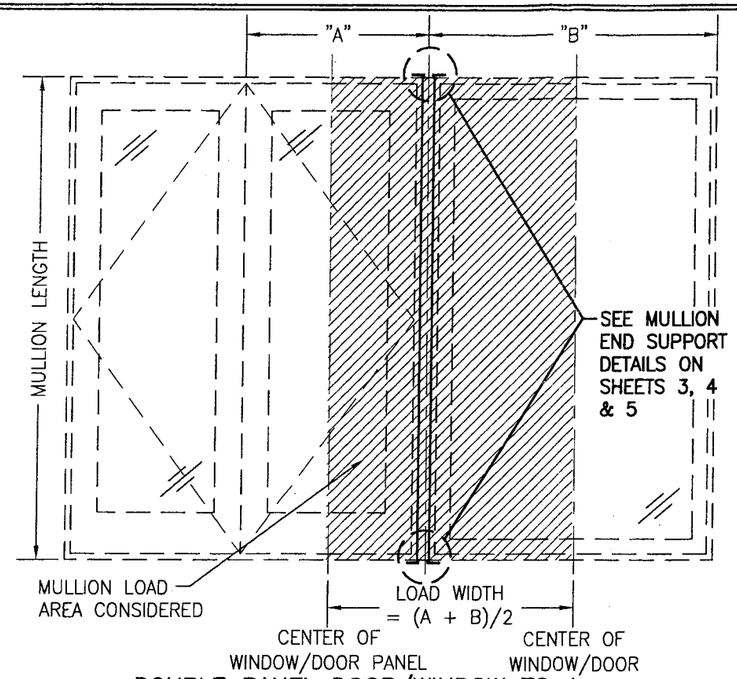

DOUBLE PANEL DOOR/WINDOW TO A SINGLE DOOR OR FIXED SIDELIGHT
(SEE LOAD TABLE 3.0)

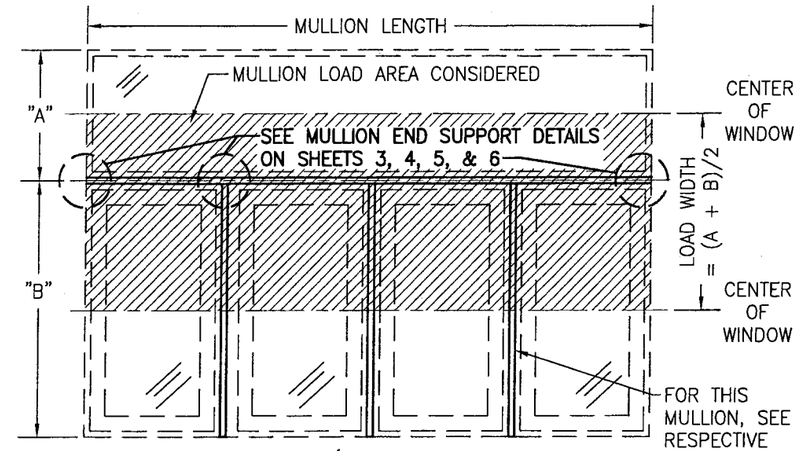

MULTIPLE WINDOWS/DOORS WITH TRANSOM
(SEE LOAD TABLE 3.0)

NOTES: 1. TRANSOM MAY BE SINGLE OR MULTIPLE WINDOWS.
2. CONTINUOUS MULLION MAY BE HORIZONTAL OR VERTICAL (HORIZONTAL SHOWN).

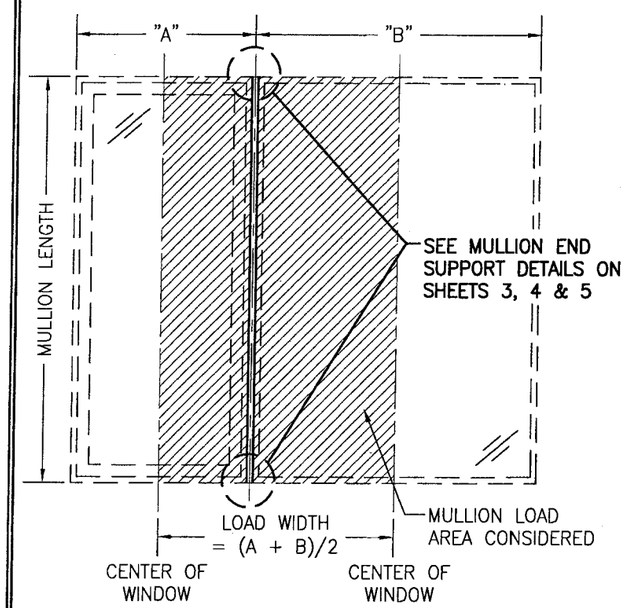

SINGLE OPERABLE DOOR/WINDOW TO A SINGLE OPERABLE OR FIXED DOOR/WINDOW
(SEE LOAD TABLE 3.0)

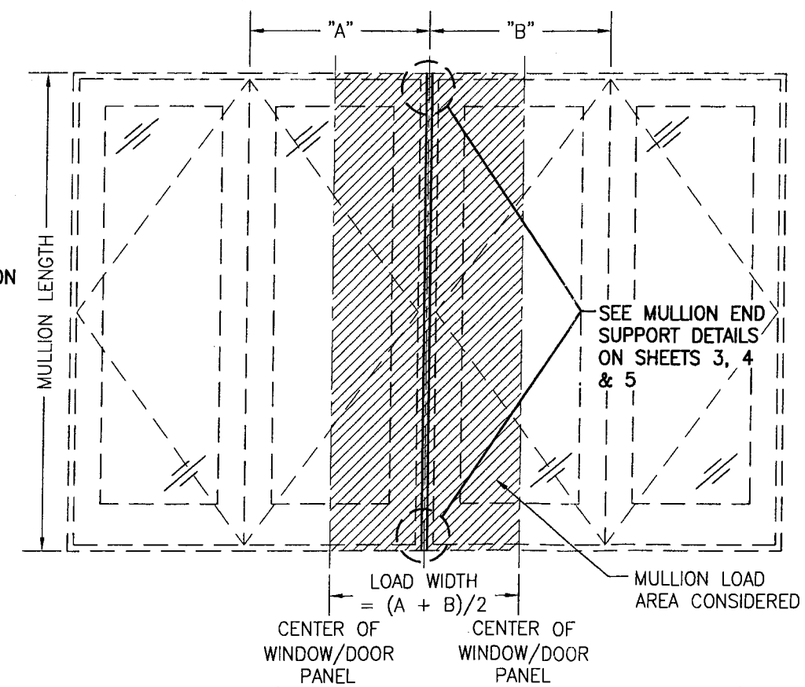

DOUBLE PANEL DOOR/WINDOW TO A DOUBLE PANEL DOOR/WINDOW
(SEE LOAD TABLE 3.0)

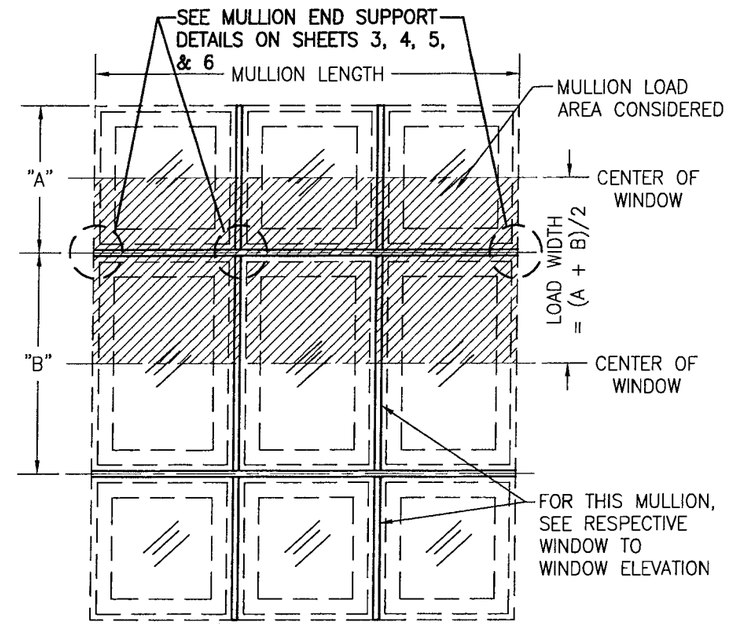

MULTIPLE WINDOWS (SEE LOAD TABLE 3.0)
(CONTINUOUS MULLION MAY BE HORIZONTAL OR VERTICAL (HORIZONTAL SHOWN))

NOTE: ATTACHMENT OF WINDOW/DOOR FRAME TO MULLIONS SHALL BE AS REQUIRED BY THE INDIVIDUAL WINDOW/DOOR N.O.A. FOR ATTACHMENT TO BUCK/OPENING EXCEPT THAT SPECIFIED FRAME SCREWS MUST BE EQUILAVENT SIZE SMS SCREWS PREDILLED INTO TUBE OR SELF TAPPING/DRILLING SCREWS

PRODUCT APPROVED as complying with the Florida Building Code
Acceptance No 09-0826.08
Expiration Date 7-17-2014
By Tony Harris
Miami Dade Product Control Division

DRAWN BY: W.W.S.	CHECKED BY: W.W.S.
PLOT: 1=24	DATE: 08/20/09

NO.	REVISION DESCRIPTION	BY	DATE

DRAWING TITLE
ALUMINUM TUBE CLIPPED MULLIONS

MANUFACTURER
WEATHER SHIELD WINDOWS & DOORS
ONE WEATHER SHIELD PLAZA
MEDFORD, WI 54451
715-748-6555

CONSULTANTS
W. W. SCHAEFER ENGINEERING & CONSULTING, P.A.
8895 N. MILITARY TRAIL; SUITE C-204
PALM BEACH GARDENS, FL 33410
PHONE: 561-775-4902 FAX: 561-775-4903

CERTIFICATION
AUG 21 2009
WARREN W. SCHAEFER, P.E.
P.E. NO. 44135

DRAWING NO. 1580
REV.
SHEET NO. 2 OF 9

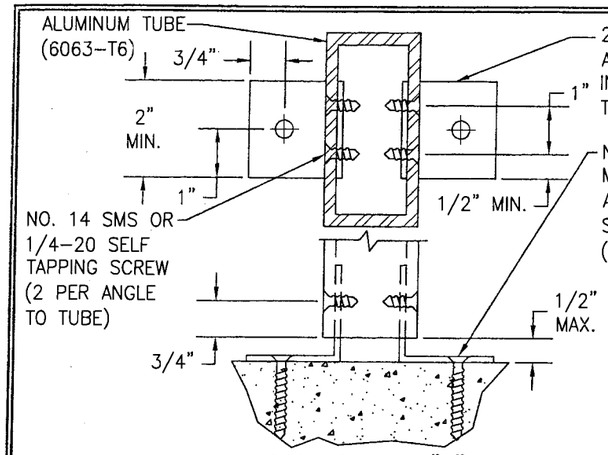

CONNECTION "A"
(INTO WOOD, BLOCK/CONCRETE, METAL STUD, STEEL OR ALUMINUM SUBSTRATES)

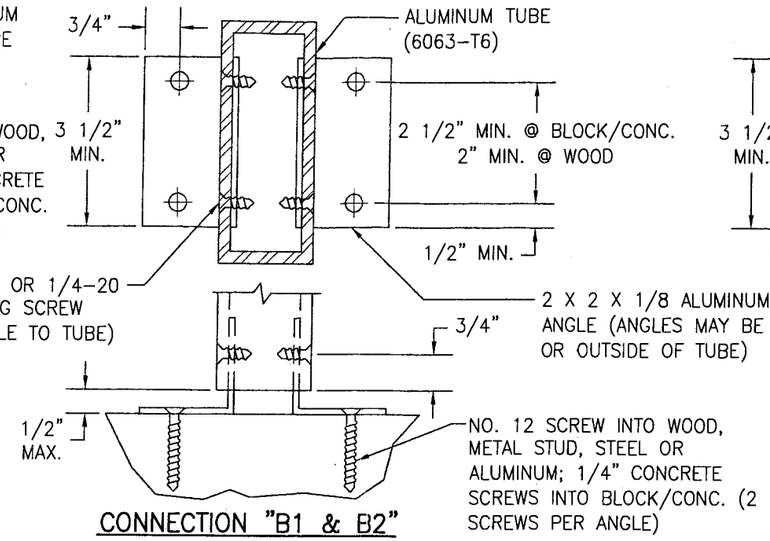

CONNECTION "B1 & B2"
"B1" = INTO WOOD OR BLOCK SUBSTRATES
"B2" = INTO CONCRETE, METAL STUD, STEEL OR ALUMINUM SUBSTRATES

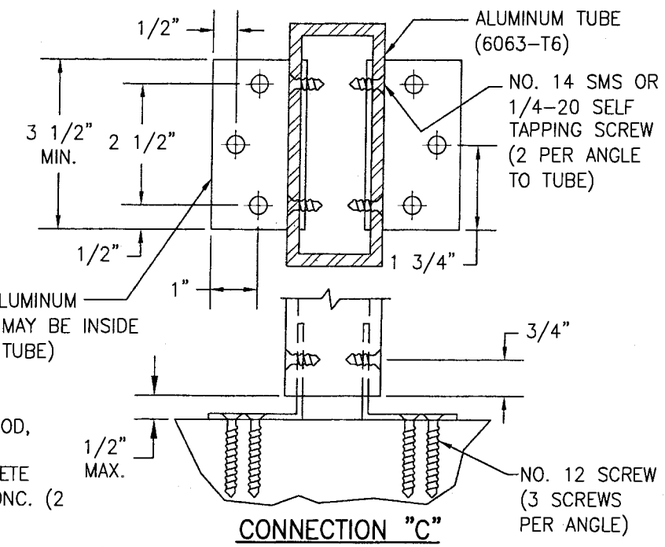

CONNECTION "C"
(INTO WOOD, METAL STUD, STEEL OR ALUMINUM SUBSTRATES)

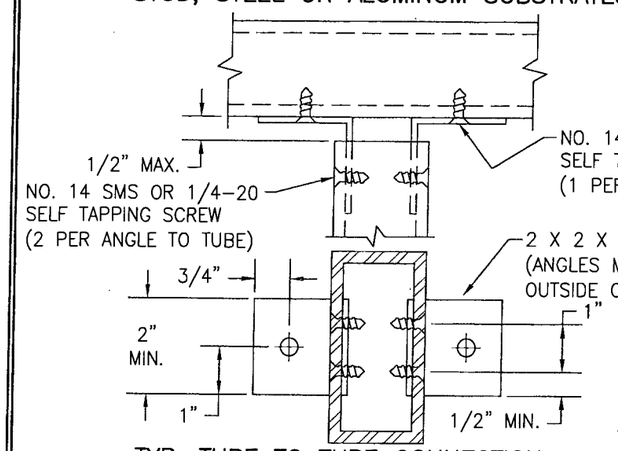

TYP. TUBE TO TUBE CONNECTION
(CONSIDER EQUIVALENT TO CONNECTION "A")

PRODUCT REVIEWED as complying with the Florida Building Code Acceptance No. 09-0826.08 Expiration Date 7-17-2012 By Miami Dade Product Control Division

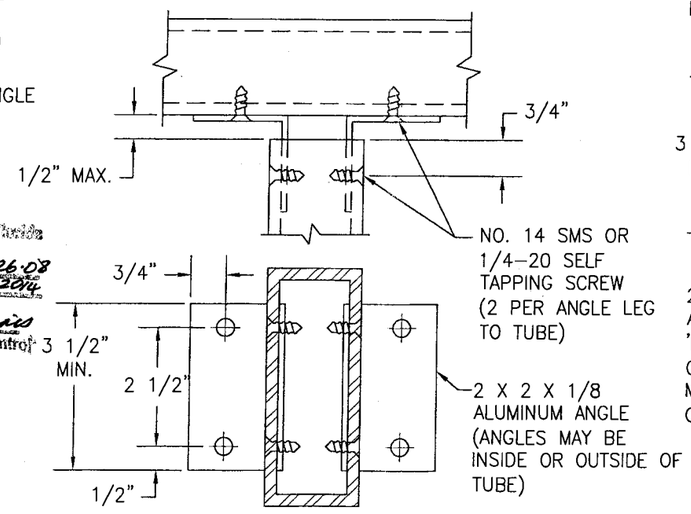

TYP. TUBE TO TUBE CONNECTION
(CONSIDER EQUIVALENT TO OR STRONGER THAN ALL CONNECTIONS)

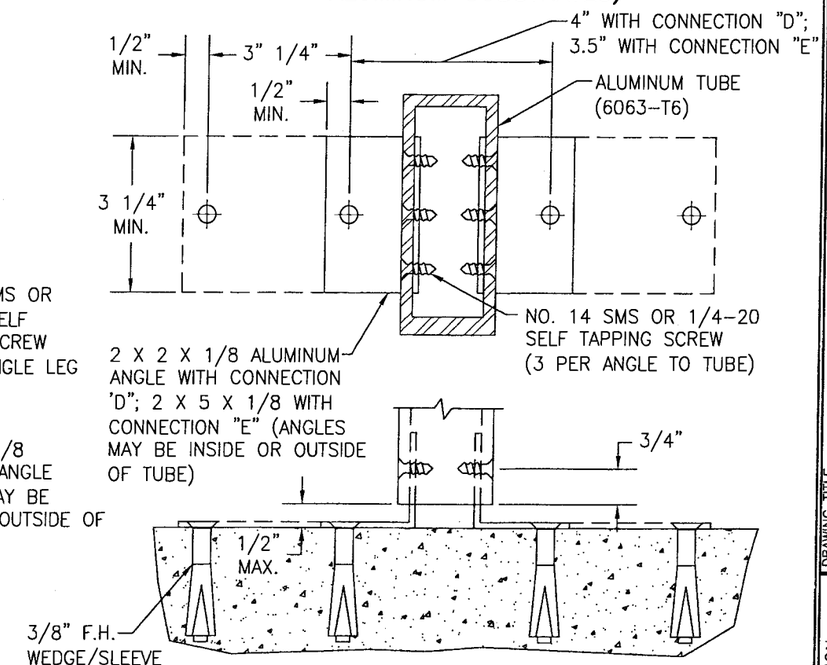

CONNECTION "D" & "E"
(INTO CONCRETE OR CONCRETE FILLED BLOCK SUBSTRATES)
"D" = 2 ANCHORS & 2 X 2 ANGLES
"E" = 4 ANCHORS & 2 X 5 ANGLES

ANCHOR REQUIREMENTS TABLE

CLIP SCREWS

OPENING TYPE (SUBSTRATE)	CLIP TO OPENING FASTENER TYPE	MINIMUM EMBED	MINIMUM EDGE DIST.
MIN. 2X4 WOOD FRAME OR BUCK (MIN. GR. 3 & G=0.55)	NO. 12 SMS OR WOOD SCREW	1 1/4"	3/4"
MIN. 18 GA. 33 KSI METAL STUD	NO. 12 GR. 5 SELF TAP/DRILL SCREW	FULL	1/2"
MIN. 1/8" THK A36 STEEL	NO. 12 GR. 5 SELF TAP/DRILL SCREW	FULL	1/2"
MIN. 0.100" THK 6063-T5 ALUM.	NO. 12 GR. 5 SELF TAP/DRILL SCREW	FULL	1/2"
C-90 BLOCK (CMU)	(1) 1/4" CONCRETE SCREW	1 1/4"	2 1/4"
MIN. 2500 PSI CONCRETE	(1) 1/4" CONCRETE SCREW	1 1/2"	2 1/4"
CONCRETE FILLED C-90 BLOCK OR MIN. 2500 PSI CONCRETE	(2) 3/8" WEDGE ANCHOR	3"	3"

(1) CONCRETE SCREWS SHALL BE ELCO ULTRACONS, ITW RAMSET/RED HEAD TAPCONS OR HILTI KWIK-CON II (HARDENED STEEL OR S.S.).

(2) WEDGE/SLEEVE ANCHORS SHALL BE ITW RAMSET RED HEAD DYNABOLT OR HILTI KWIK BOLT 3 (STEEL OR S.S.).

NOTE: ALL SCREWS JOINING CONNECTORS TO TUBES MUST HAVE FULL THREAD PENETRATION THROUGH ALL MATERIAL & SHALL BE CORROSION RESISTANT MIN. GR. 5 STEEL OR MIN. ALLOY GROUP 1, 2, & 3 CONDITION "A" STAINLESS STEEL

MULLION END CONNECTION DETAILS USING CLIP ANGLES

DRAWN BY: W.W.S.	CHECKED BY: W.W.S.
PLOT: 1=1	DATE: 08/20/09

NO.	REVISION DESCRIPTION	BY	DATE

DRAWING TITLE: ALUMINUM TUBE CLIPPED MULLIONS

MANUFACTURER: WEATHER SHIELD WINDOWS & DOORS, ONE WEATHER SHIELD PLAZA, MEDFORD, WI 54451, 715-748-6555

CONSULTANTS: W. W. SCHAEFER ENGINEERING & CONSULTING, P.A.
8895 N. MILITARY TRAIL, SUITE C-204
PALM BEACH GARDENS, FL 33410
PHONE: 561-775-4902 FAX: 561-775-4903

CERTIFICATION: AUG 21 2009
WARREN W. SCHAEFER, P.E. P.E. NO. 44135

DRAWING NO. 1580 REV.

SHEET NO. 3 OF 9

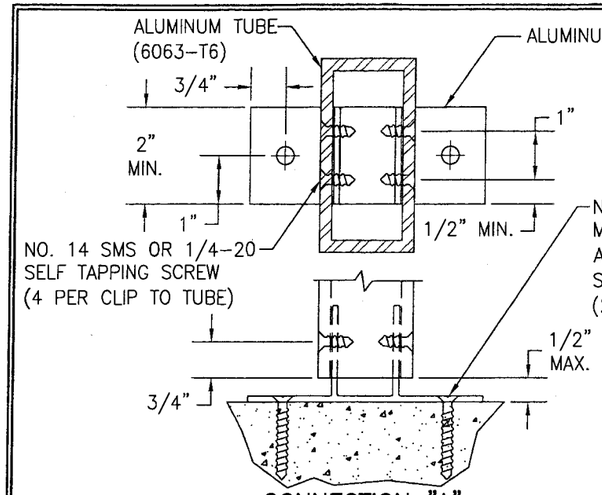

CONNECTION "A"

(INTO WOOD, BLOCK/CONCRETE, METAL STUD, STEEL OR ALUMINUM SUBSTRATES)

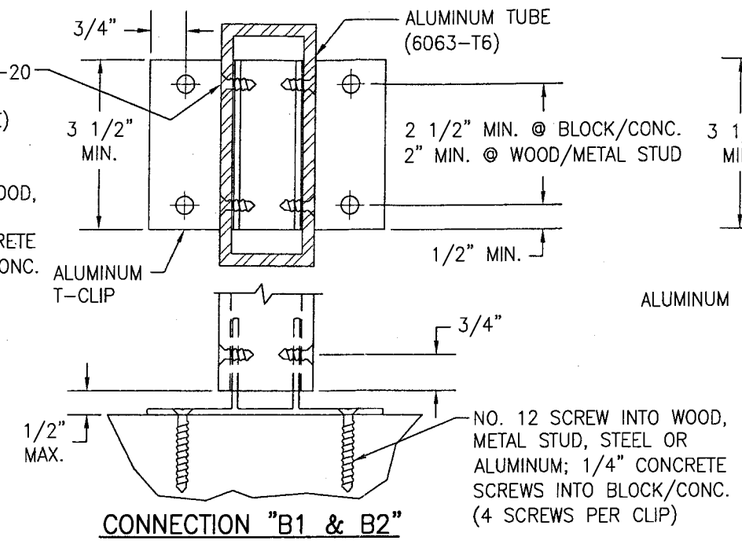

CONNECTION "B1 & B2"

"B1" = INTO WOOD OR BLOCK SUBSTRATES

"B2" = INTO CONCRETE, METAL STUD, STEEL OR ALUMINUM SUBSTRATES

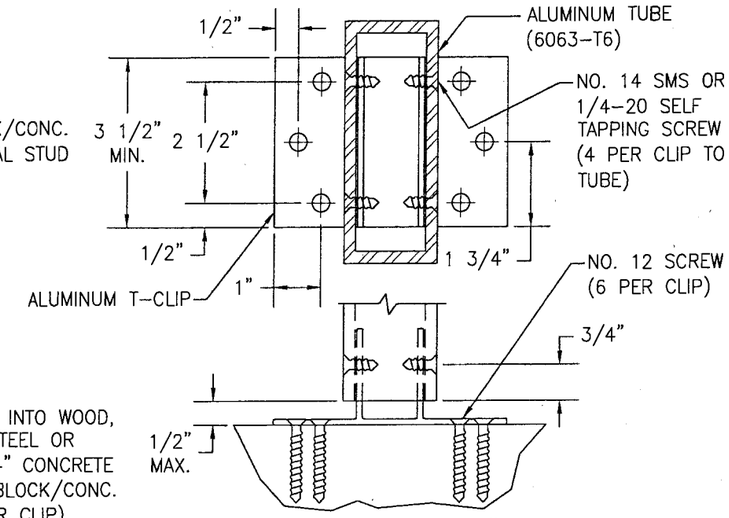

CONNECTION "C"

(INTO WOOD, METAL STUD, STEEL OR ALUMINUM SUBSTRATES)

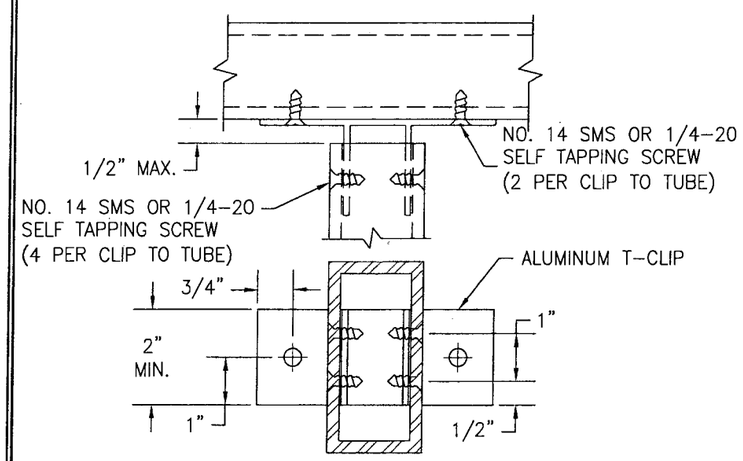

TYP. TUBE TO TUBE CONNECTION

(CONSIDER EQUIVALENT TO CONNECTION "A")

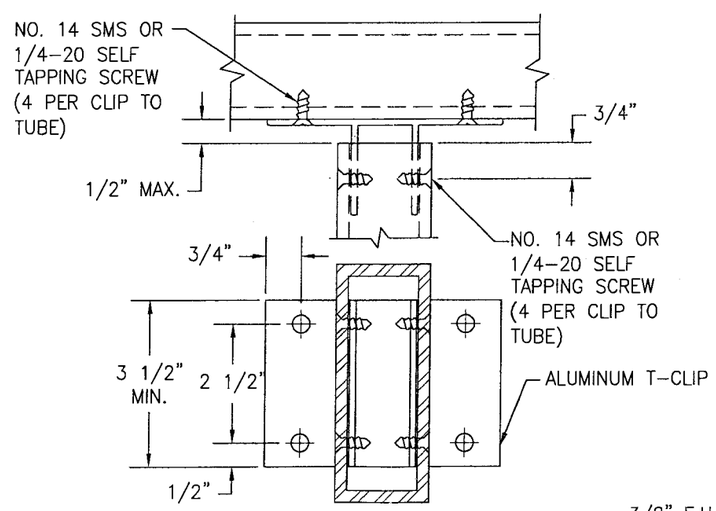

TYP. TUBE TO TUBE CONNECTION

(CONSIDER EQUIVALENT TO OR STRONGER THAN ALL CONNECTIONS)

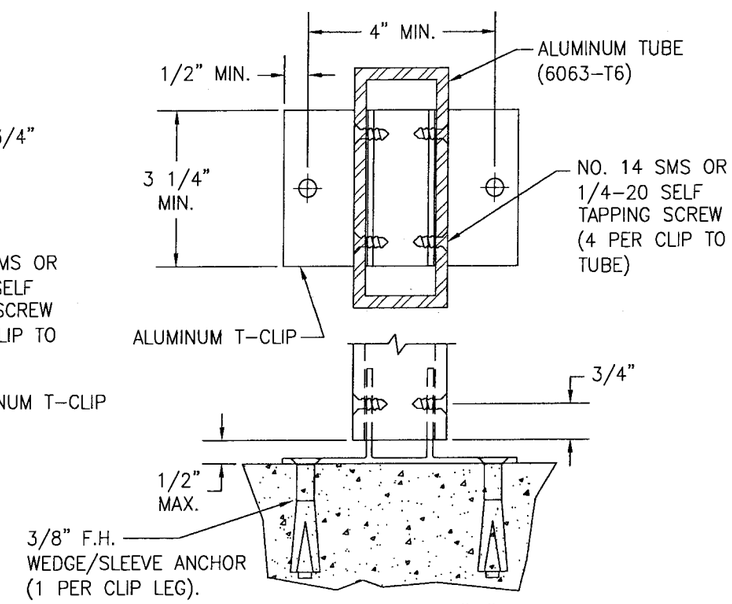

CONNECTION "D"

(INTO CONCRETE OR CONCRETE FILLED BLOCK SUBSTRATES)

ANCHOR REQUIREMENTS
SEE TABLE ON SHEET 3

PRODUCT REVISED
as complying with the Florida Building Code
Acceptance No 09-0826.08
Expiration Date 7-17-2014
By Judy Harris
Miami Dade Product Control Division

MULLION END CONNECTION DETAILS USING T-CLIPS

ALL CLIPS MAY BE EXTRUDED SUCH THAT THE LEGS CONNECTING TO THE TUBE ARE INSIDE OR OUTSIDE THE TUBE. SEE PARTS NOTE ON SHEET 6.

DRAWN BY: W.W.S.	CHECKED BY: W.W.S.
PLOT: 1=3	DATE: 08/20/09

NO.	REVISION DESCRIPTION	BY	DATE

DRAWING TITLE: ALUMINUM TUBE CLIPPED MULLIONS

MANUFACTURER: WEATHER SHIELD WINDOWS & DOORS
ONE WEATHER SHIELD PLAZA
MEDFORD, WI 54451
715-748-6555

CONSULTANTS
W. W. SCHAEFER ENGINEERING & CONSULTING, P.A.
8695 N. MILITARY TRAIL; SUITE C-204
PALM BEACH GARDENS, FL 33410
PHONE: 561-775-4902 FAX: 561-775-4903

CERTIFICATION
AUG 21 2009
WARREN W. SCHAEFER, P.E.
P.E. NO. 44135

DRAWING NO. 1580 REV.

SHEET NO. 4 OF 9

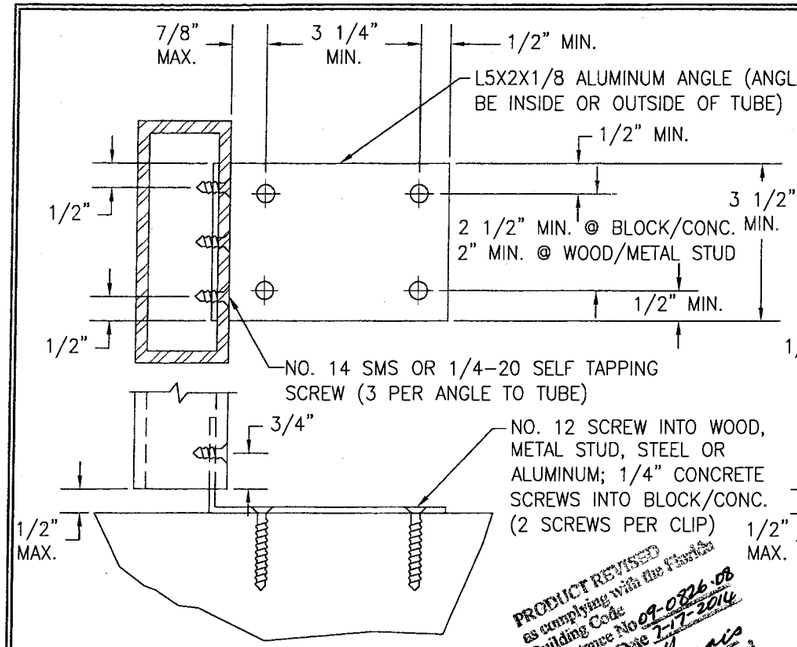

CONNECTION "F"
(INTO WOOD, BLOCK/CONCRETE, METAL STUD, STEEL OR ALUMINUM SUBSTRATES)

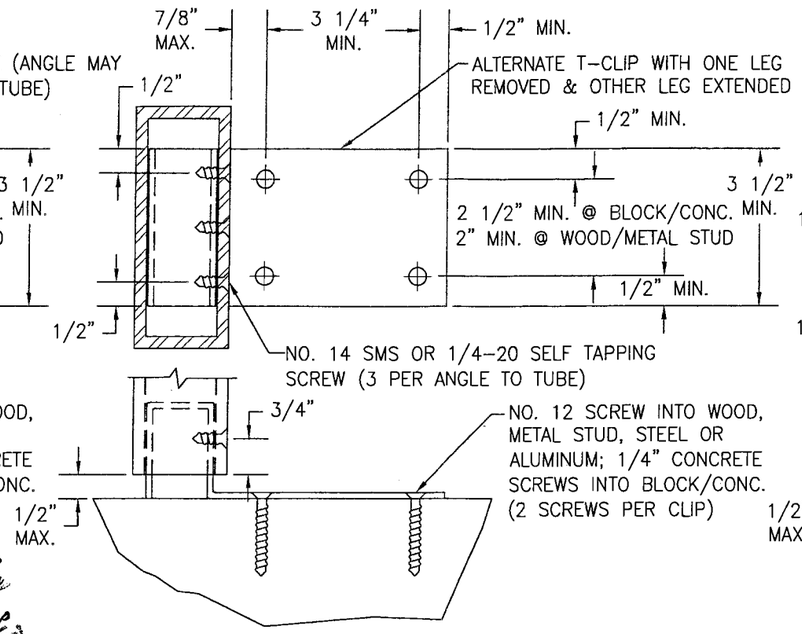

ALTERNATE CONNECTION "F"
(INTO WOOD, BLOCK/CONCRETE, METAL STUD, STEEL OR ALUMINUM SUBSTRATES)

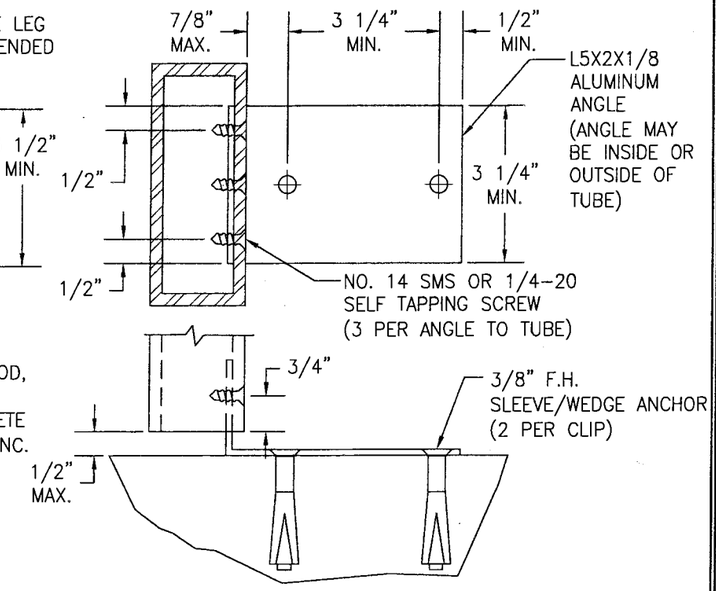

CONNECTION "G"
(INTO CONCRETE OR CONCRETE FILLED BLOCK SUBSTRATES)

PRODUCT REVISED
as complying with the Florida Building Code
Acceptance No 09-0826.08
Expiration Date 7-17-2014
By Miami Dade Product Control Division

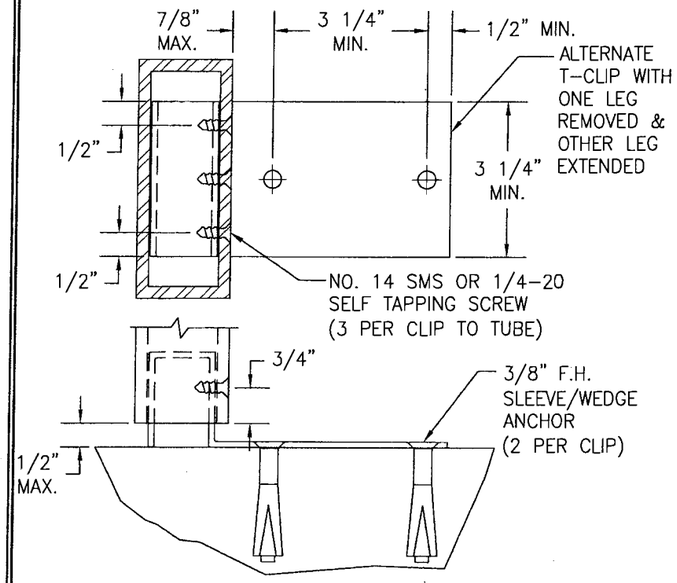

ALTERNATE CONNECTION "G"
(INTO CONCRETE OR CONCRETE FILLED BLOCK SUBSTRATES)

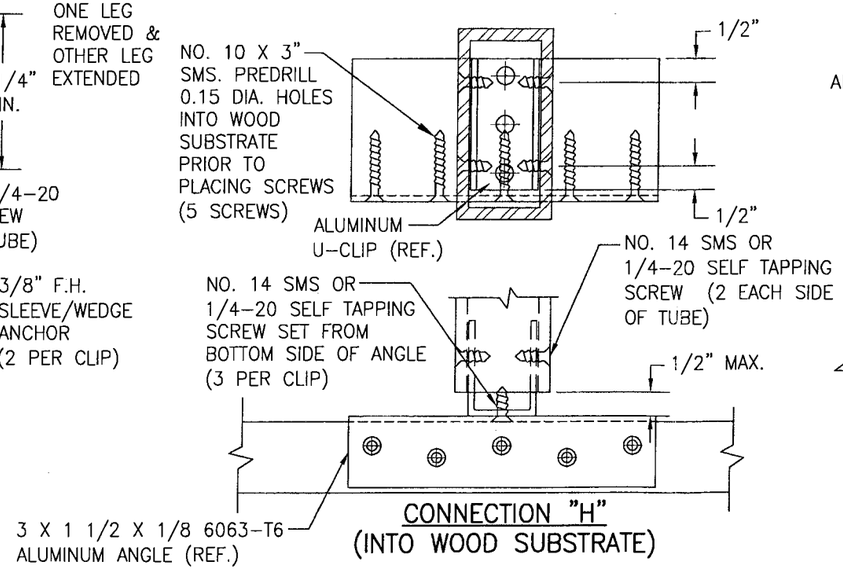

CONNECTION "H"
(INTO WOOD SUBSTRATE)

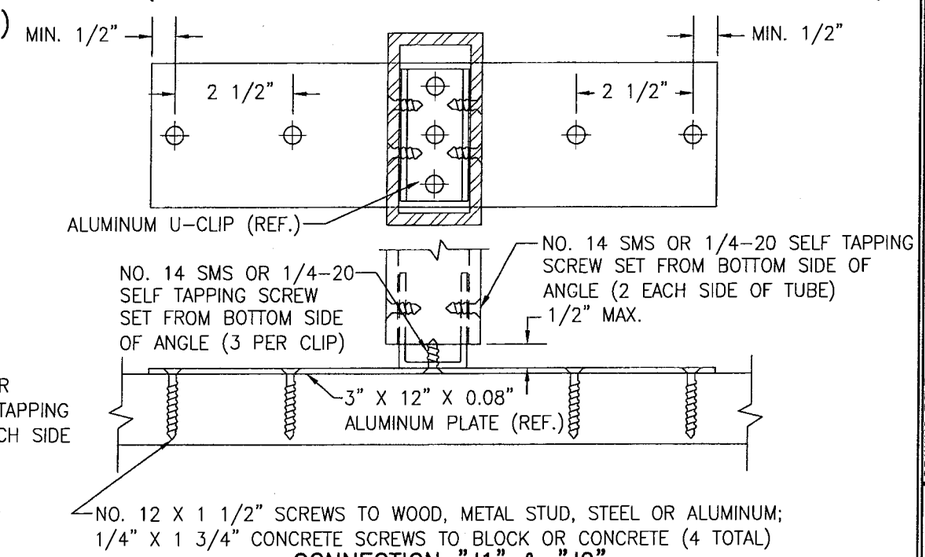

CONNECTION "J1" & "J2"

"J1" = INTO WOOD OR BLOCK SUBSTRATES
"J2" = INTO CONCRETE, METAL STUD, STEEL OR ALUMINUM SUBSTRATES

NOTE: WITH CONNECTION "J1" & "J2" SCREWS THROUGH CLIP INTO SUBSTRATE MAY BE PLACED THROUGH PREDRILLED HOLES IN THE WINDOW/DOOR FRAME IF DESIRED TO ANCHOR MULLION END AFTER WINDOW/DOOR INSTALLATION. (HEAD OF SCREW WOULD BE PARTIALLY COUNTER SUNK INTO FRAME MEMBER).

ANCHOR REQUIREMENTS
SEE TABLE ON SHEET 3

DRAWN BY: W.W.S.	CHECKED BY: W.W.S.
PLOT: 1=3	DATE: 08/20/09

NO.	REVISION DESCRIPTION	BY	DATE

DRAWING TITLE
ALUMINUM TUBE CLIPPED MULLIONS

MANUFACTURER
WEATHER SHIELD WINDOWS & DOORS
ONE WEATHER SHIELD PLAZA
MEDFORD, WI 54451
715-748-6555

CONSULTANTS
W. W. SCHAEFER ENGINEERING & CONSULTING, P.A.
8895 N. MILITARY TRAIL, SUITE C-204
PALM BEACH GARDENS, FL 33410
PHONE: 561-775-4902 FAX: 561-775-4903

CERTIFICATION
AUG 21 2009
WARREN W. SCHAEFER, P.E.
P.E. NO. 44135

DRAWING NO. 1580
REV.
SHEET NO. 5 OF 9

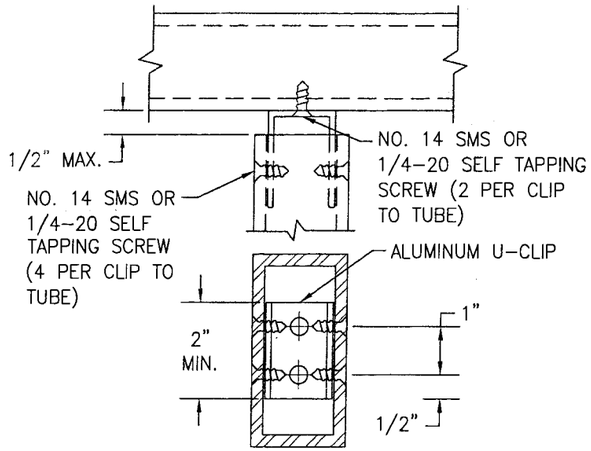

TYP. ALTERNATE TUBE TO TUBE CONNECTION
(CONSIDER EQUIVALENT TO CONNECTION "A", "F" & "G")

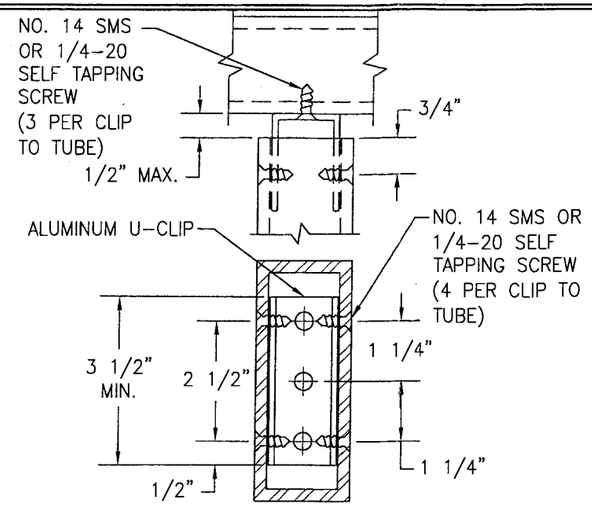

TYP. ALTERNATE TUBE TO TUBE CONNECTION
(CONSIDER EQUIVALENT TO ALL CONNECTIONS EXCEPT "E")

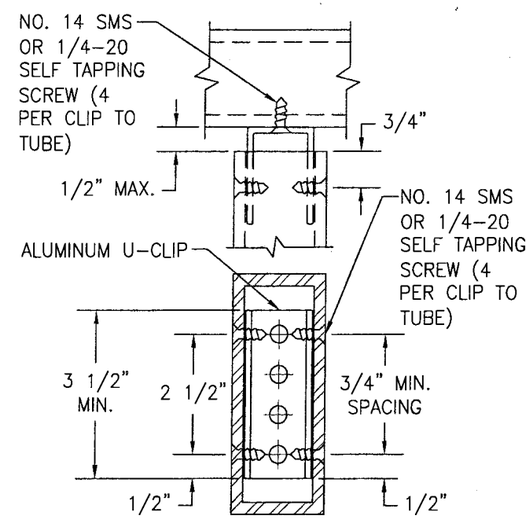

TYP. ALTERNATE TUBE TO TUBE CONNECTION
(CONSIDER EQUIVALENT TO CONNECTIONS "A" THROUGH "J")

ANCHOR REQUIREMENTS
SEE TABLE ON SHEET 3

ALTERNATE TUBE TO TUBE CONNECTION DETAILS USING U-CLIPS

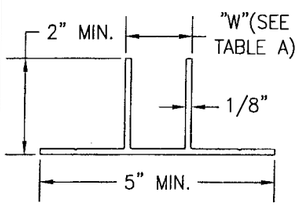

TYPICAL EXTRUDED T-CLIP
(6063-T6 ALUMINUM)

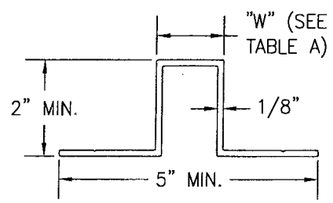

ALTERNATE EXTRUDED OR BENT T-CLIP
(MAY REPLACE ALL T-CLIPS SHOWN IN DETAILS)
(6063-T5 ALUMINUM)

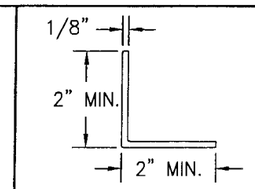

TYPICAL CLIP ANGLE
(6063-T6 ALUMINUM)

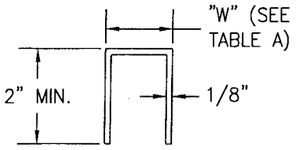

ALTERNATE U-CLIP
(T OR U-CLIP WITH FLANGES REMOVED)
(6063-T5 OR T6 ALUMINUM)

TABLE A	
TUBE TYPE	"W"
1" WIDE X 1/8" WALLS	11/16"
2" WIDE X 1/8" WALLS	1 11/16"
2" WIDE X 1/4" WALLS	1 7/16"

"T" & "U" CLIPS

PARTS NOTE: DIMENSIONS SHOWN CONSIDER PLACEMENT OF THE CLIPS TO BE INSIDE THE TUBES. IT SHALL BE ACCEPTABLE FOR THE CLIPS TO BE SIZED SUCH THAT THEY FIT SNUGLY OUTSIDE THE TUBE AS WELL. CONECTION OF THE CLIPS TO THE TUBES SHALL BE AS SPECIFIED REGARDLESS OF WHETHER THEY CONNECT INSIDE OR OUTSIDE THE TUBES.

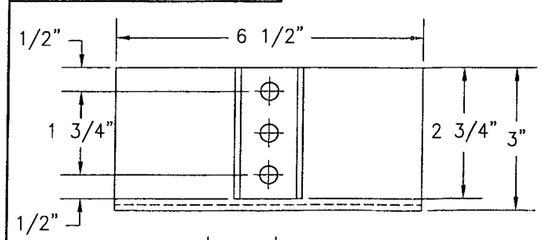

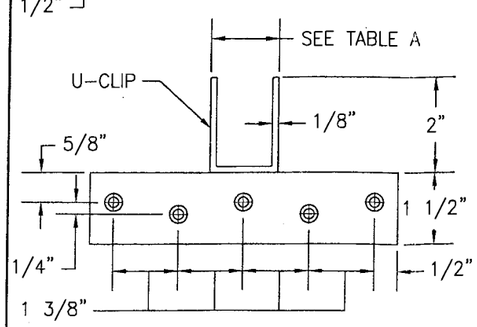

CONNECTION "H" ANGLE

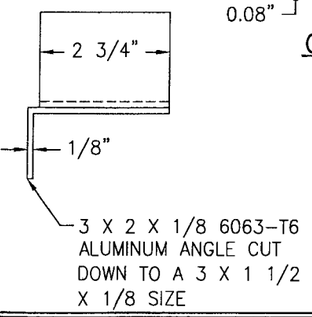

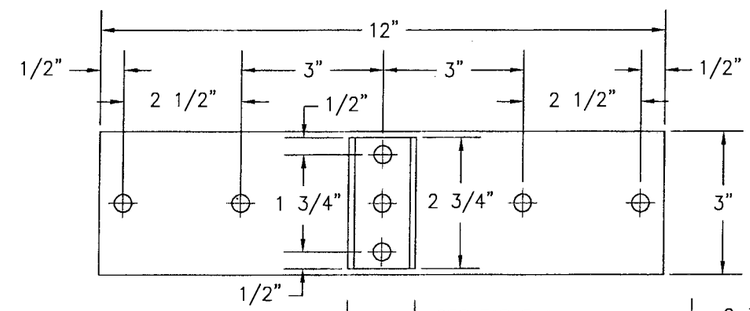

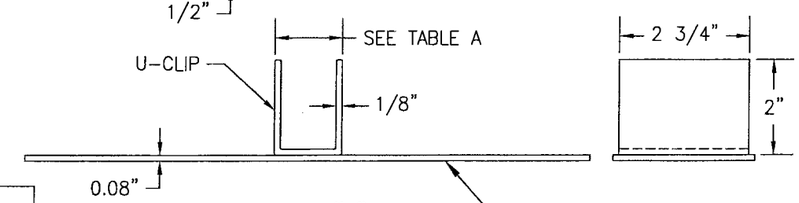

CONNECTION "J" PLATE

PRODUCT REVISED
as complying with the Florida Building Code
Acceptance No 09-0826.08
Expiration Date 7-17-2014
By Miami Dade Product Control Division

NO.	REVISION DESCRIPTION	BY	DATE

DRAWN BY: W.W.S. | CHECKED BY: W.W.S.
PLOT: 1=3 | DATE: 08/20/09

DRAWING TITLE: ALUMINUM TUBE CLIPPED MULLIONS

MANUFACTURER: WEATHER SHIELD WINDOWS & DOORS
ONE WEATHER SHIELD PLAZA
MEDFORD, WI 54451
715-748-6555

CONSULTANTS
W. W. SCHAEFER ENGINEERING & CONSULTING, P.A.
8895 N. MILITARY TRAIL, SUITE C-204
PALM BEACH GARDENS, FL 33410
PHONE: 561-775-4902 FAX: 561-775-4903

CERTIFICATION
AUG 21 2009
WARREN W. SCHAEFER, P.E.
P.E. NO. 44135

DRAWING NO. 1580 | REV.
SHEET NO. 6 OF 9

LOAD TABLE 1.0

MAXIMUM MULLION LENGTH (IN.)	MAXIMUM LOAD WIDTH (IN.)	ALLOWABLE PRESSURE (PSF)									
		4X1X1/8 TUBE	4X2X1/8 TUBE	4X2X1/4 OR 5X2X1/8 TUBE	5X2X1/4 TUBE	6X2X1/4 TUBE	CONNECTION TYPES				
							"A" "F" & "G"	"B1" & "J1"	"B2" "D" & "J2"	"C" & "H"	"E"
60	48	85.0	85.0	85.0	85.0	85.0	69.3	85.0	85.0	85.0	85.0
	54	85.0	85.0	85.0	85.0	85.0	67.2	85.0	85.0	85.0	85.0
	60	81.5	85.0	85.0	85.0	85.0	66.6	85.0	85.0	85.0	85.0
66	30	85.0	85.0	85.0	85.0	85.0	78.3	85.0	85.0	85.0	85.0
	36	85.0	85.0	85.0	85.0	85.0	69.3	85.0	85.0	85.0	85.0
	42	85.0	85.0	85.0	85.0	85.0	63.4	85.0	85.0	85.0	85.0
	48	84.2	85.0	85.0	85.0	85.0	59.4	85.0	85.0	85.0	85.0
	54	74.9	85.0	85.0	85.0	85.0	56.9	85.0	85.0	85.0	85.0
	60	67.4	85.0	85.0	85.0	85.0	55.5	85.0	85.0	85.0	85.0
	66	61.2	85.0	85.0	85.0	85.0	55.0	85.0	85.0	85.0	85.0
72	24	85.0	85.0	85.0	85.0	85.0	83.2	85.0	85.0	85.0	85.0
	30	85.0	85.0	85.0	85.0	85.0	70.1	85.0	85.0	85.0	85.0
	36	85.0	85.0	85.0	85.0	85.0	61.6	85.0	85.0	85.0	85.0
	42	80.6	85.0	85.0	85.0	85.0	55.9	85.0	85.0	85.0	85.0
	48	70.6	85.0	85.0	85.0	85.0	52.0	85.0	85.0	85.0	85.0
	54	62.7	85.0	85.0	85.0	85.0	49.3	85.0	85.0	85.0	85.0
	60	56.4	82.5	85.0	85.0	85.0	47.5	85.0	85.0	85.0	85.0
	66	51.3	75.0	85.0	85.0	85.0	46.5	85.0	85.0	85.0	85.0
	72	47.0	68.7	85.0	85.0	85.0	46.2	85.0	85.0	85.0	85.0
78	24	85.0	85.0	85.0	85.0	85.0	75.6	85.0	85.0	85.0	85.0
	30	85.0	85.0	85.0	85.0	85.0	63.4	85.0	85.0	85.0	85.0
	36	74.0	85.0	85.0	85.0	85.0	55.5	85.0	85.0	85.0	85.0
	42	63.4	85.0	85.0	85.0	85.0	50.0	85.0	85.0	85.0	85.0
	48	55.5	81.1	85.0	85.0	85.0	46.2	85.0	85.0	85.0	85.0
	54	49.3	72.1	85.0	85.0	85.0	43.5	85.0	85.0	85.0	85.0
	60	44.4	64.9	85.0	85.0	85.0	41.6	83.2	85.0	85.0	85.0
	66	40.4	59.0	85.0	85.0	85.0	40.3	80.7	85.0	85.0	85.0
	72	37.0	54.0	82.1	85.0	85.0	39.6	79.2	85.0	85.0	85.0
84	24	85.0	85.0	85.0	85.0	85.0	69.3	85.0	85.0	85.0	85.0
	30	71.1	85.0	85.0	85.0	85.0	57.9	85.0	85.0	85.0	85.0
	36	59.2	85.0	85.0	85.0	85.0	50.4	85.0	85.0	85.0	85.0
	42	50.8	74.2	85.0	85.0	85.0	45.3	85.0	85.0	85.0	85.0
	48	44.4	64.9	85.0	85.0	85.0	41.6	83.2	85.0	85.0	85.0
	54	39.5	57.7	85.0	85.0	85.0	38.9	77.8	85.0	85.0	85.0
	60	35.5	51.9	85.0	85.0	85.0	37.0	74.0	85.0	85.0	85.0
	66	32.3	47.2	77.3	85.0	85.0	35.6	71.2	85.0	85.0	85.0
	72	29.6	43.3	70.8	85.0	85.0	34.7	69.3	85.0	85.0	85.0
90	18	85.0	85.0	85.0	85.0	85.0	82.2	85.0	85.0	85.0	85.0
	24	72.2	85.0	85.0	85.0	85.0	64.0	85.0	85.0	85.0	85.0
	30	57.8	84.4	85.0	85.0	85.0	53.2	85.0	85.0	85.0	85.0
	36	48.2	70.4	85.0	85.0	85.0	46.2	85.0	85.0	85.0	85.0
	42	41.3	60.3	85.0	85.0	85.0	41.3	82.7	85.0	85.0	85.0
	48	36.1	52.8	85.0	85.0	85.0	37.8	75.6	85.0	85.0	85.0
	54	32.1	46.9	82.0	85.0	85.0	35.2	70.4	85.0	85.0	85.0
	60	28.9	42.2	73.8	85.0	85.0	33.3	66.6	82.6	85.0	85.0
	66	26.3	38.4	67.1	85.0	85.0	31.8	63.7	79.0	85.0	85.0
	72	–	35.2	61.5	85.0	85.0	30.8	61.6	76.4	85.0	85.0

INSTRUCTIONS FOR TABLE USE:

1. DETERMINE REQUIRED WIND PRESSURE FOR THE OPENING.
2. DETERMINE THE MULLION LENGTH & LOAD WIDTH USING THE APPLICABLE ELEVATION ON SHEETS 1 & 2.
3. CHOOSE A TUBE SIZE THAT MEETS OR EXCEEDS THE REQUIRED PRESSURE FOR THE APPLICABLE MULLION LENGTH & LOAD WIDTH CONDITIONS.
4. CHOOSE A CONNECTION TYPE THAT MEETS OR EXCEEDS THE REQUIRED PRESSURE FOR THE APPLICABLE MULLION LENGTH & LOAD WIDTH CONDITIONS.

LOAD TABLE 1.0 (CONT.)

MAXIMUM MULLION LENGTH (IN.)	MAXIMUM LOAD WIDTH (IN.)	ALLOWABLE PRESSURE (PSF)									
		4X1X1/8 TUBE	4X2X1/8 TUBE	4X2X1/4 OR 5X2X1/8 TUBE	5X2X1/4 TUBE	6X2X1/4 TUBE	CONNECTION TYPES				
							"A" "F" & "G"	"B1" & "J1"	"B2" "D" & "J2"	"C" & "H"	"E"
96	18	79.4	85.0	85.0	85.0	85.0	76.5	85.0	85.0	85.0	85.0
	24	59.5	85.0	85.0	85.0	85.0	59.4	85.0	85.0	85.0	85.0
	30	47.6	69.6	85.0	85.0	85.0	49.3	85.0	85.0	85.0	85.0
	36	39.7	58.0	85.0	85.0	85.0	42.7	85.0	85.0	85.0	85.0
	42	34.0	49.7	85.0	85.0	85.0	38.0	76.1	85.0	85.0	85.0
	48	29.8	43.5	76.0	85.0	85.0	34.7	69.3	85.0	85.0	85.0
	54	26.5	38.7	67.6	85.0	85.0	32.2	64.3	79.8	85.0	85.0
	60	–	34.8	60.8	85.0	85.0	30.3	60.5	75.1	85.0	85.0
	66	–	31.6	55.3	85.0	85.0	28.8	57.6	71.5	85.0	85.0
	72	–	29.0	50.7	85.0	85.0	27.7	55.5	68.8	85.0	85.0
102	18	66.2	85.0	85.0	85.0	85.0	71.6	85.0	85.0	85.0	85.0
	24	49.6	72.5	85.0	85.0	85.0	55.5	85.0	85.0	85.0	85.0
	30	39.7	58.0	85.0	85.0	85.0	45.9	85.0	85.0	85.0	85.0
	36	33.1	48.3	84.5	85.0	85.0	39.6	79.2	85.0	85.0	85.0
	42	28.4	41.4	72.5	85.0	85.0	35.2	70.4	85.0	85.0	85.0
	48	24.8	36.3	63.4	85.0	85.0	32.0	64.0	79.4	85.0	85.0
	54	–	32.2	56.4	85.0	85.0	29.6	59.2	73.4	85.0	85.0
	60	–	29.0	50.7	85.0	85.0	27.7	55.5	68.8	85.0	85.0
	66	–	26.4	46.1	83.7	85.0	26.3	52.6	65.3	85.0	85.0
	72	–	–	42.3	76.7	85.0	25.2	50.4	62.5	82.1	85.0
108	18	55.7	81.4	85.0	85.0	85.0	67.2	85.0	85.0	85.0	85.0
	24	41.8	61.1	85.0	85.0	85.0	52.0	85.0	85.0	85.0	85.0
	30	33.4	48.9	85.0	85.0	85.0	42.9	85.0	85.0	85.0	85.0
	36	27.9	40.7	71.2	85.0	85.0	37.0	74.0	85.0	85.0	85.0
	42	–	34.9	61.0	85.0	85.0	32.8	65.6	81.3	85.0	85.0
	48	–	30.5	53.4	85.0	85.0	29.7	59.4	73.7	85.0	85.0
	54	–	27.1	47.5	85.0	85.0	27.4	54.8	68.0	85.0	85.0
	60	–	–	42.7	77.5	85.0	25.6	51.2	63.5	83.3	85.0
	66	–	–	38.8	70.5	85.0	24.2	48.4	60.0	78.8	85.0
	72	–	–	35.6	64.6	85.0	–	46.2	57.3	75.2	85.0
120	18	40.6	59.4	85.0	85.0	85.0	60.0	85.0	85.0	85.0	85.0
	24	30.5	44.5	77.9	85.0	85.0	46.2	85.0	85.0	85.0	85.0
	30	24.4	35.6	62.3	85.0	85.0	38.0	76.1	85.0	85.0	85.0
	36	–	29.7	51.9	85.0	85.0	32.6	65.3	80.9	85.0	85.0
	42	–	25.4	44.5	80.7	85.0	28.8	57.6	71.5	85.0	85.0
	48	–	–	38.9	70.6	85.0	26.0	52.0	54.5	84.6	85.0
	54	–	–	34.6	62.8	85.0	–	47.7	59.2	77.6	85.0
	60	–	–	31.1	56.5	85.0	–	44.4	55.0	72.2	85.0
	66	–	–	28.3	51.4	85.0	–	41.7	51.8	67.9	85.0
	72	–	–	26.0	47.1	75.8	–	39.6	49.1	64.5	85.0
126	18	–	51.3	85.0	85.0	85.0	56.9	85.0	85.0	85.0	85.0
	24	–	38.5	67.3	85.0	85.0	43.8	85.0	85.0	85.0	85.0
	30	–	30.8	53.8	85.0	85.0	36.0	72.0	85.0	85.0	85.0
	36	–	25.6	44.8	81.4	85.0	30.8	61.6	76.4	85.0	85.0
	42	–	–	38.4	69.7	85.0	27.2	54.3	67.4	85.0	85.0
	48	–	–	33.6	61.0	85.0	24.5	48.9	60.7	79.6	85.0
	54	–	–	29.9	54.2	85.0	–	44.8	55.6	72.9	85.0
	60	–	–	26.9	48.8	78.6	–	41.6	51.6	67.7	85.0
	66	–	–	24.5	44.4	71.4	–	39.0	48.4	63.5	85.0

1. ALL TUBES SHALL BE MIN. 6063-T6 ALUMINUM.
2. FOR ALL CONNECTION TYPES, SEE SHEETS 3, 4, 5 & 6 FOR DETAIL.
3. INDIVIDUAL UNIT SIZES & SHUTTER REQUIREMENTS ARE LIMITED BY THEIR OWN INDIVIDUAL "CERTIFICATION".
4. IN ORDER TO SIMPLIFY TABLES, TABLE PRESSURES ARE LIMITED TO 85 PSF. USE OF THESE MULLIONS FOR PRESSURES HIGHER THAN 85 PSF SHALL BE REVIEWED UNDER SEPERATE APPROVAL.
5. THESE LOAD TABLES ARE CERTIFIED AS CORRECT IN CONTENT. HOWEVER, CHOOSING OF THE CORRECT MULLION & CONNECTION FROM THESE TABLES FOR ITS SPECIFIC USE IS THE RESPONSIBILITY OF THOSE USING THE TABLES AND SHOULD BE VERIFIED BY THE BUILDING OFFICIAL OR A FLORIDA CERTIFIED ENGINEER.

PRODUCT REVISED
as complying with the Florida Building Code
Acceptance No 09-0826.08
Expiration Date 7-17-2014
By Jody Harris
Miami Dade Product Control Division

NO.	REVISION DESCRIPTION	BY	DATE

DRAWN BY: W.W.S. | CHECKED BY: W.W.S.
PLOT: 1=1 | DATE: 08/20/09

DRAWING TITLE: ALUMINUM TUBE CLIPPED MULLIONS

MANUFACTURER: WEATHER SHIELD WINDOWS & DOORS
ONE WEATHER SHIELD PLAZA
MEDFORD, WI 54451
715-748-6555

CONSULTANTS
W. W. SCHAEFER ENGINEERING & CONSULTING, P.A.
8895 N. MILITARY TRAIL; SUITE C-204
PALM BEACH GARDENS, FL 33410
PHONE: 561-775-4902 FAX: 561-775-4903

CERTIFICATION
AUG 21 2009
WARREN W. SCHAEFER, P.E.
P.E. NO. 44135

DRAWING NO. 1580 | REV.
SHEET NO. 7 OF 9

LOAD TABLE 2.0

MAXIMUM MULLION LENGTH (IN.)	MAXIMUM LOAD WIDTH (IN.)	ALLOWABLE PRESSURE (PSF)									
		4X1X1/8 TUBE	4X2X1/8 TUBE	4X2X1/4 OR 5X2X1/8 TUBE	5X2X1/4 TUBE	6X2X1/4 TUBE	CONNECTION TYPES				
							"A" "F" & "G"	"B1" & "J1"	"B2" "D" & "J2"	"C" & "H"	"E"
42	72	85.0	85.0	85.0	85.0	85.0	56.6	85.0	85.0	85.0	85.0
48	60	85.0	85.0	85.0	85.0	85.0	59.4	85.0	85.0	85.0	85.0
	66	85.0	85.0	85.0	85.0	85.0	54.0	85.0	85.0	85.0	85.0
	72	85.0	85.0	85.0	85.0	85.0	49.5	85.0	85.0	85.0	85.0
54	54	85.0	85.0	85.0	85.0	85.0	58.7	85.0	85.0	85.0	85.0
	60	85.0	85.0	85.0	85.0	85.0	52.8	85.0	85.0	85.0	85.0
	66	85.0	85.0	85.0	85.0	85.0	48.0	85.0	85.0	85.0	85.0
	72	83.9	85.0	85.0	85.0	85.0	44.0	85.0	85.0	85.0	85.0
	78	77.4	85.0	85.0	85.0	85.0	40.6	81.3	85.0	85.0	85.0
	84	71.9	85.0	85.0	85.0	85.0	37.7	75.5	85.0	85.0	85.0
60	48	85.0	85.0	85.0	85.0	85.0	59.4	85.0	85.0	85.0	85.0
	54	85.0	85.0	85.0	85.0	85.0	52.8	85.0	85.0	85.0	85.0
	60	81.5	85.0	85.0	85.0	85.0	47.5	85.0	85.0	85.0	85.0
	66	74.1	85.0	85.0	85.0	85.0	43.2	85.0	85.0	85.0	85.0
	72	67.9	85.0	85.0	85.0	85.0	39.6	79.2	85.0	85.0	85.0
	78	62.7	85.0	85.0	85.0	85.0	36.6	73.1	85.0	85.0	85.0
	84	58.2	85.0	85.0	85.0	85.0	34.0	67.9	84.2	85.0	85.0
	90	54.3	79.4	85.0	85.0	85.0	31.7	63.4	78.6	85.0	85.0
66	42	85.0	85.0	85.0	85.0	85.0	61.7	85.0	85.0	85.0	85.0
	48	84.2	85.0	85.0	85.0	85.0	54.0	85.0	85.0	85.0	85.0
	54	74.9	85.0	85.0	85.0	85.0	48.0	85.0	85.0	85.0	85.0
	60	67.4	85.0	85.0	85.0	85.0	43.2	85.0	85.0	85.0	85.0
	66	61.2	85.0	85.0	85.0	85.0	39.3	78.6	85.0	85.0	85.0
	72	56.1	82.0	85.0	85.0	85.0	36.0	72.0	85.0	85.0	85.0
	78	51.8	75.7	85.0	85.0	85.0	33.2	66.5	82.5	85.0	85.0
	84	48.1	70.3	85.0	85.0	85.0	30.9	61.7	76.6	85.0	85.0
	90	44.9	65.6	85.0	85.0	85.0	28.8	57.6	71.5	85.0	85.0
72	36	85.0	85.0	85.0	85.0	85.0	66.0	85.0	85.0	85.0	85.0
	42	80.6	85.0	85.0	85.0	85.0	56.6	85.0	85.0	85.0	85.0
	48	70.6	85.0	85.0	85.0	85.0	49.5	85.0	85.0	85.0	85.0
	54	62.7	85.0	85.0	85.0	85.0	44.0	85.0	85.0	85.0	85.0
	60	56.4	82.5	85.0	85.0	85.0	39.6	79.2	85.0	85.0	85.0
	66	51.3	75.0	85.0	85.0	85.0	36.0	72.0	85.0	85.0	85.0
	72	47.0	68.7	85.0	85.0	85.0	33.0	66.0	81.9	85.0	85.0
	78	43.4	63.4	85.0	85.0	85.0	30.5	61.0	75.6	85.0	85.0
	84	40.3	58.9	82.6	85.0	85.0	28.3	56.6	70.2	85.0	85.0
	90	37.6	55.0	77.1	85.0	85.0	26.4	52.8	65.5	85.0	85.0
78	36	74.0	85.0	85.0	85.0	85.0	61.0	85.0	85.0	85.0	85.0
	42	63.4	85.0	85.0	85.0	85.0	52.2	85.0	85.0	85.0	85.0
	48	55.5	81.1	85.0	85.0	85.0	45.7	85.0	85.0	85.0	85.0
	54	49.3	72.1	85.0	85.0	85.0	40.6	81.3	85.0	85.0	85.0
	60	44.4	64.9	85.0	85.0	85.0	36.6	73.1	85.0	85.0	85.0
	66	40.4	59.0	85.0	85.0	85.0	33.2	66.5	82.5	85.0	85.0
	72	37.0	54.0	82.1	85.0	85.0	30.5	61.0	75.6	85.0	85.0
	78	34.1	49.9	75.8	85.0	85.0	28.1	56.3	69.8	85.0	85.0
	84	31.7	46.3	70.4	85.0	85.0	26.1	52.2	64.8	85.0	85.0
	90	29.6	43.2	65.7	85.0	85.0	24.4	48.8	60.5	79.4	85.0

INSTRUCTIONS FOR TABLE USE:

1. DETERMINE REQUIRED WIND PRESSURE FOR THE OPENING.
2. DETERMINE THE MULLION LENGTH & LOAD WIDTH USING THE APPLICABLE ELEVATION ON SHEETS 1 & 2.
3. CHOOSE A TUBE SIZE THAT MEETS OR EXCEEDS THE REQUIRED PRESSURE FOR THE APPLICABLE MULLION LENGTH & LOAD WIDTH CONDITIONS.
4. CHOOSE A CONNECTION TYPE THAT MEETS OR EXCEEDS THE REQUIRED PRESSURE FOR THE APPLICABLE MULLION LENGTH & LOAD WIDTH CONDITIONS.

LOAD TABLE 2.0 (CONT.)

MAXIMUM MULLION LENGTH (IN.)	MAXIMUM LOAD WIDTH (IN.)	ALLOWABLE PRESSURE (PSF)									
		4X1X1/8 TUBE	4X2X1/8 TUBE	4X2X1/4 OR 5X2X1/8 TUBE	5X2X1/4 TUBE	6X2X1/4 TUBE	CONNECTION TYPES				
							"A" "F" & "G"	"B1" & "J1"	"B2" "D" & "J2"	"C" & "H"	"E"
84	36	59.2	85.0	85.0	85.0	85.0	56.6	85.0	85.0	85.0	85.0
	42	50.8	74.2	85.0	85.0	85.0	48.5	85.0	85.0	85.0	85.0
	48	44.4	64.9	85.0	85.0	85.0	42.4	84.9	85.0	85.0	85.0
	54	39.5	57.7	85.0	85.0	85.0	37.7	75.5	85.0	85.0	85.0
	60	35.5	51.9	85.0	85.0	85.0	34.0	67.9	84.2	85.0	85.0
	66	32.3	47.2	77.3	85.0	85.0	30.9	61.7	76.6	85.0	85.0
	72	29.6	43.3	70.8	85.0	85.0	28.3	56.6	70.2	85.0	85.0
	78	27.3	39.9	65.4	85.0	85.0	26.1	52.2	64.8	85.0	85.0
	84	–	37.1	60.7	85.0	85.0	24.3	48.5	60.2	79.0	85.0
	90	–	34.6	56.7	85.0	85.0	24.0	45.3	56.2	73.7	85.0
90	42	41.3	60.3	85.0	85.0	85.0	45.3	85.0	85.0	85.0	85.0
	48	36.1	52.8	85.0	85.0	85.0	39.6	79.2	85.0	85.0	85.0
	54	32.1	46.9	82.0	85.0	85.0	35.2	70.4	85.0	85.0	85.0
	60	28.9	42.2	73.8	85.0	85.0	31.7	63.4	78.6	85.0	85.0
	66	26.3	38.4	67.1	85.0	85.0	28.8	57.6	71.5	85.0	85.0
	72	–	35.2	61.5	85.0	85.0	26.4	52.8	65.5	85.0	85.0
	78	–	32.5	56.8	85.0	85.0	24.4	48.8	60.5	79.4	85.0
	84	–	30.2	52.7	85.0	85.0	–	45.3	56.2	73.7	85.0
	90	–	28.1	49.2	85.0	85.0	–	42.3	52.4	68.8	85.0
96	42	34.0	49.7	85.0	85.0	85.0	42.4	84.9	85.0	85.0	85.0
	48	29.8	43.5	76.0	85.0	85.0	37.1	74.3	85.0	85.0	85.0
	54	26.5	38.7	67.6	85.0	85.0	33.0	66.0	81.9	85.0	85.0
	60	–	34.8	60.8	85.0	85.0	29.7	59.4	73.7	85.0	85.0
	66	–	31.6	55.3	85.0	85.0	27.0	54.0	67.0	85.0	85.0
	72	–	29.0	50.7	85.0	85.0	24.8	49.5	61.4	80.6	85.0
	78	–	26.8	46.8	84.9	85.0	–	45.7	56.7	74.4	85.0
	84	–	–	43.5	78.8	85.0	–	42.4	52.7	69.1	85.0
	90	–	–	40.6	73.6	85.0	–	39.6	49.1	64.5	85.0
102	42	28.4	41.4	72.5	85.0	85.0	40.0	79.9	85.0	85.0	85.0
	48	24.8	36.3	63.4	85.0	85.0	35.0	69.9	85.0	85.0	85.0
	54	–	32.2	56.4	85.0	85.0	31.1	62.1	85.0	85.0	85.0
	60	–	29.0	50.7	85.0	85.0	28.0	55.9	69.4	85.0	85.0
	66	–	26.4	46.1	83.7	85.0	25.4	50.8	63.1	82.8	85.0
	72	–	–	42.3	76.7	85.0	–	46.6	57.8	75.9	85.0
	78	–	–	39.0	70.8	85.0	–	43.0	53.4	70.0	85.0
	84	–	–	36.2	65.7	85.0	–	40.0	49.6	65.0	85.0
	90	–	–	33.8	61.4	85.0	–	37.3	46.3	60.7	85.0

TABLE NOTES:

1. ALL TUBES SHALL BE MIN. 6063–T6 ALUMINUM.
2. FOR ALL CONNECTION TYPES, SEE SHEETS 3, 4, 5 & 6 FOR DETAIL.
3. INDIVIDUAL UNIT SIZES & SHUTTER REQUIREMENTS ARE LIMITED BY THEIR OWN INDIVIDUAL "CERTIFICATION".
4. IN ORDER TO SIMPLIFY TABLES, TABLE PRESSURES ARE LIMITED TO 85 PSF. USE OF THESE MULLIONS FOR PRESSURES HIGHER THAN 85 PSF SHALL BE REVIEWED UNDER SEPERATE APPROVAL.
5. THESE LOAD TABLES ARE CERTIFIED AS CORRECT IN CONTENT. HOWEVER, CHOOSING OF THE CORRECT MULLION & CONNECTION FROM THESE TABLES FOR ITS SPECIFIC USE IS THE RESPONSIBILITY OF THOSE USING THE TABLES AND SHOULD BE VERIFIED BY THE BUILDING OFFICIAL OR A FLORIDA CERTIFIED ENGINEER.

PRODUCT REVISED
as complying with the Florida
Building Code
Acceptance No 09-0826.08
Expiration Date 7-17-2014
By Toby Harris
Miami Dade Product Control
Division

NO.	REVISION DESCRIPTION	BY	DATE

DRAWN BY: W.W.S. | CHECKED BY: W.W.S.
PLOT: 1=1 | DATE: 08/20/09

DRAWING TITLE: ALUMINUM TUBE CLIPPED MULLIONS

MANUFACTURER: WEATHER SHIELD WINDOWS & DOORS
ONE WEATHER SHIELD PLAZA
MEDFORD, WI 54451
715-748-6555

CONSULTANTS: W. W. SCHAEFER ENGINEERING & CONSULTING, P.A.
8895 N. MILITARY TRAIL; SUITE C-204
PALM BEACH GARDENS, FL 33410
PHONE: 561-775-4902 FAX: 561-775-4903

CERTIFICATION
AUG 21 2009
WARREN W. SCHAEFER, P.E.
P.E. NO. 44135

DRAWING NO. 1580 | REV.

SHEET NO. 8 OF 9

LOAD TABLE 3.0

MAXIMUM MULLION LENGTH (IN.)	MAXIMUM LOAD WIDTH (IN.)	ALLOWABLE PRESSURE (PSF)									
		4X1X1/8 TUBE	4X2X1/8 TUBE	4X2X1/4 OR 5X2X1/8 TUBE	5X2X1/4 TUBE	6X2X1/4 TUBE	CONNECTION TYPES				
							"A" "F" & "G"	"B1" & "J1"	"B2" "D" & "J2"	"C" & "H"	"E"
36	60	85.0	85.0	85.0	85.0	85.0	55.5	85.0	85.0	85.0	85.0
	66	85.0	85.0	85.0	85.0	85.0	50.4	85.0	85.0	85.0	85.0
	72	85.0	85.0	85.0	85.0	85.0	46.2	85.0	85.0	85.0	85.0
42	48	85.0	85.0	85.0	85.0	85.0	59.4	85.0	85.0	85.0	85.0
	54	85.0	85.0	85.0	85.0	85.0	52.8	85.0	85.0	85.0	85.0
	60	85.0	85.0	85.0	85.0	85.0	47.5	85.0	85.0	85.0	85.0
	66	85.0	85.0	85.0	85.0	85.0	43.2	85.0	85.0	85.0	85.0
	72	85.0	85.0	85.0	85.0	85.0	39.6	79.2	85.0	85.0	85.0
48	42	85.0	85.0	85.0	85.0	85.0	59.4	85.0	85.0	85.0	85.0
	48	85.0	85.0	85.0	85.0	85.0	52.0	85.0	85.0	85.0	85.0
	54	85.0	85.0	85.0	85.0	85.0	46.2	85.0	85.0	85.0	85.0
	60	85.0	85.0	85.0	85.0	85.0	41.6	83.2	85.0	85.0	85.0
	66	85.0	85.0	85.0	85.0	85.0	37.8	75.6	85.0	85.0	85.0
	72	85.0	85.0	85.0	85.0	85.0	34.7	69.3	85.0	85.0	85.0
54	36	85.0	85.0	85.0	85.0	85.0	61.6	85.0	85.0	85.0	85.0
	42	85.0	85.0	85.0	85.0	85.0	52.8	85.0	85.0	85.0	85.0
	48	85.0	85.0	85.0	85.0	85.0	46.2	85.0	85.0	85.0	85.0
	54	85.0	85.0	85.0	85.0	85.0	41.1	82.2	85.0	85.0	85.0
	60	85.0	85.0	85.0	85.0	85.0	37.0	74.0	85.0	85.0	85.0
	66	85.0	85.0	85.0	85.0	85.0	33.6	67.2	83.4	85.0	85.0
	72	83.9	85.0	85.0	85.0	85.0	30.8	61.6	76.4	85.0	85.0
60	36	85.0	85.0	85.0	85.0	85.0	55.5	85.0	85.0	85.0	85.0
	42	85.0	85.0	85.0	85.0	85.0	47.5	85.0	85.0	85.0	85.0
	48	85.0	85.0	85.0	85.0	85.0	41.6	83.2	85.0	85.0	85.0
	54	85.0	85.0	85.0	85.0	85.0	37.0	74.0	85.0	85.0	85.0
	60	81.5	85.0	85.0	85.0	85.0	33.3	66.6	82.6	85.0	85.0
	66	74.1	85.0	85.0	85.0	85.0	30.3	60.5	75.1	85.0	85.0
	72	67.9	85.0	85.0	85.0	85.0	27.7	55.5	68.8	85.0	85.0
	78	62.7	85.0	85.0	85.0	85.0	25.6	51.2	63.5	83.3	85.0
	84	58.2	85.0	85.0	85.0	85.0	–	47.5	59.0	77.4	85.0
66	30	85.0	85.0	85.0	85.0	85.0	60.5	85.0	85.0	85.0	85.0
	36	85.0	85.0	85.0	85.0	85.0	50.4	85.0	85.0	85.0	85.0
	42	85.0	85.0	85.0	85.0	85.0	43.2	46.4	85.0	85.0	85.0
	48	84.2	85.0	85.0	85.0	85.0	37.8	75.6	85.0	85.0	85.0
	54	74.9	85.0	85.0	85.0	85.0	33.6	67.2	83.4	85.0	85.0
	60	67.4	85.0	85.0	85.0	85.0	30.3	60.5	75.1	85.0	85.0
	66	61.2	85.0	85.0	85.0	85.0	27.5	55.0	68.2	85.0	85.0
	72	56.1	82.0	85.0	85.0	85.0	25.2	50.4	62.5	82.1	85.0
	78	51.8	75.7	85.0	85.0	85.0	–	46.5	57.7	75.7	85.0
	84	48.1	70.3	85.0	85.0	85.0	–	43.2	53.6	70.3	85.0
72	30	85.0	85.0	85.0	85.0	85.0	55.5	85.0	85.0	85.0	85.0
	36	85.0	85.0	85.0	85.0	85.0	46.2	85.0	85.0	85.0	85.0
	42	80.6	85.0	85.0	85.0	85.0	39.6	79.2	78.3	85.0	85.0
	48	70.6	85.0	85.0	85.0	85.0	34.7	69.3	85.0	85.0	85.0
	54	62.7	85.0	85.0	85.0	85.0	30.8	61.6	76.4	85.0	85.0
	60	56.4	82.5	85.0	85.0	85.0	27.7	55.5	68.8	85.0	85.0
	66	51.3	75.0	85.0	85.0	85.0	25.2	50.4	62.5	82.1	85.0
	72	47.0	68.7	85.0	85.0	85.0	–	46.2	57.3	75.2	85.0
	78	43.4	63.4	85.0	85.0	85.0	–	42.7	52.9	69.4	85.0
	84	40.3	58.9	82.6	85.0	85.0	–	39.6	49.1	64.5	85.0
	90	37.6	55.0	77.1	85.0	85.0	–	37.0	45.9	60.2	85.0
78	30	85.0	85.0	85.0	85.0	85.0	51.2	85.0	85.0	85.0	85.0
	36	74.0	85.0	85.0	85.0	85.0	42.7	85.0	85.0	85.0	85.0
	42	63.4	85.0	85.0	85.0	85.0	36.6	73.1	85.0	85.0	85.0
	48	55.5	81.1	85.0	85.0	85.0	32.0	64.0	79.4	85.0	85.0
	54	49.3	72.1	85.0	85.0	85.0	28.4	56.9	70.6	85.0	85.0
	60	44.4	64.9	85.0	85.0	85.0	25.6	51.2	63.5	83.3	85.0
	66	40.4	59.0	85.0	85.0	85.0	–	46.5	57.7	75.7	85.0
	72	37.0	54.0	82.1	85.0	85.0	–	42.7	52.9	69.4	85.0
	78	34.1	49.9	75.8	85.0	85.0	–	39.4	48.9	64.1	85.0
	84	31.7	46.3	70.4	85.0	85.0	–	36.6	45.4	59.5	85.0
	90	29.6	43.2	65.7	85.0	85.0	–	34.1	42.3	55.5	82.1
84	30	71.1	85.0	85.0	85.0	85.0	47.5	85.0	85.0	85.0	85.0
	36	59.2	85.0	85.0	85.0	85.0	39.6	79.2	85.0	85.0	85.0
	42	50.8	74.2	85.0	85.0	85.0	34.0	67.9	84.2	85.0	85.0
	48	44.4	64.9	85.0	85.0	85.0	29.7	59.4	73.7	85.0	85.0
	54	39.5	57.7	85.0	85.0	85.0	26.4	52.8	65.5	85.0	85.0
	60	35.5	51.9	85.0	85.0	85.0	–	47.5	59.0	77.4	85.0
	66	32.3	47.2	77.3	85.0	85.0	–	43.2	53.6	70.3	85.0
	72	29.6	43.3	70.8	85.0	85.0	–	39.6	49.1	64.5	85.0
	78	27.3	39.9	65.4	85.0	85.0	–	36.6	45.4	59.5	85.0
	84	–	37.1	60.7	85.0	85.0	–	34.0	42.1	55.3	81.6
	90	–	34.6	56.7	85.0	85.0	–	31.7	39.3	51.6	76.2

LOAD TABLE 3.0 (CONT.)

MAXIMUM MULLION LENGTH (IN.)	MAXIMUM LOAD WIDTH (IN.) A+B	ALLOWABLE PRESSURE (PSF)									
		4X1X1/8 TUBE	4X2X1/8 TUBE	4X2X1/4 OR 5X2X1/8 TUBE	5X2X1/4 TUBE	6X2X1/4 TUBE	CONNECTION TYPES				
							"A" "F" & "G"	"B1" & "J1"	"B2" "D" & "J2"	"C" & "H"	"E"
90	30	57.8	84.4	85.0	85.0	85.0	44.4	85.0	85.0	85.0	85.0
	36	48.2	70.4	85.0	85.0	85.0	37.0	74.0	85.0	85.0	85.0
	42	41.3	60.3	85.0	85.0	85.0	31.7	63.4	78.6	85.0	85.0
	48	36.1	52.8	85.0	85.0	85.0	27.7	55.5	68.8	85.0	85.0
	54	32.1	46.9	82.0	85.0	85.0	24.7	49.3	61.2	80.2	85.0
	60	28.9	42.2	73.8	85.0	85.0	–	44.4	55.0	72.2	85.0
	66	26.3	38.4	67.1	85.0	85.0	–	40.3	50.0	65.6	85.0
	72	–	35.2	61.5	85.0	85.0	–	37.0	45.9	60.2	85.0
	78	–	32.5	56.8	85.0	85.0	–	34.1	42.3	55.5	82.1
	84	–	30.2	52.7	85.0	85.0	–	31.7	39.3	51.6	76.2
	90	–	28.1	49.2	85.0	85.0	–	29.6	36.7	48.1	71.1
96	30	47.6	69.6	85.0	85.0	85.0	41.6	83.2	85.0	85.0	85.0
	36	39.7	58.0	85.0	85.0	85.0	34.7	69.3	85.0	85.0	85.0
	42	34.0	49.7	85.0	85.0	85.0	29.7	59.4	73.7	85.0	85.0
	48	29.8	43.5	76.0	85.0	85.0	26.0	52.0	64.5	84.6	85.0
	54	26.5	38.7	67.6	85.0	85.0	–	46.2	57.3	75.2	85.0
	60	–	34.8	60.8	85.0	85.0	–	41.6	51.6	67.7	85.0
	66	–	31.6	55.3	85.0	85.0	–	37.8	46.9	61.5	85.0
	72	–	29.0	50.7	85.0	85.0	–	34.7	43.0	56.4	83.3
	78	–	–	46.8	84.9	85.0	–	32.0	39.7	52.1	76.9
	84	–	–	43.5	78.8	85.0	–	29.7	36.9	48.4	71.4
	90	–	–	40.6	73.6	85.0	–	27.7	34.4	45.1	66.7
108	30	33.4	48.9	85.0	85.0	85.0	37.0	74.0	85.0	85.0	85.0
	36	27.9	40.7	71.2	85.0	85.0	30.8	61.6	76.4	85.0	85.0
	42	–	34.9	61.0	85.0	85.0	26.4	52.8	65.5	85.0	85.0
	48	–	30.5	53.4	85.0	85.0	–	46.2	57.3	75.2	85.0
	54	–	27.1	47.5	85.0	85.0	–	41.1	51.0	66.9	85.0
	60	–	–	42.7	77.5	85.0	–	37.0	45.9	60.2	85.0
	66	–	–	38.8	70.5	85.0	–	33.6	41.7	54.7	80.8
	72	–	–	35.6	64.6	85.0	–	30.8	38.2	50.1	74.1
	78	–	–	32.9	59.6	85.0	–	28.4	35.3	46.3	68.4
	84	–	–	30.5	55.4	85.0	–	26.4	32.8	43.0	63.5
	90	–	–	28.5	51.7	85.0	–	24.7	30.6	40.1	59.3
120	30	–	35.6	62.3	85.0	85.0	33.3	66.6	82.6	85.0	85.0
	36	–	29.7	51.9	85.0	85.0	27.7	55.5	68.8	85.0	85.0
	42	–	25.4	44.5	80.7	85.0	–	47.5	59.0	77.4	85.0
	48	–	–	38.9	70.6	85.0	–	41.6	51.6	67.7	85.0
	54	–	–	34.6	62.8	85.0	–	37.0	45.9	60.2	85.0
	60	–	–	31.1	56.5	85.0	–	33.3	41.3	54.2	80.0
	66	–	–	28.3	51.4	82.7	–	30.3	37.5	49.2	72.7
	72	–	–	–	47.1	75.8	–	27.7	34.4	45.1	66.7
	78	–	–	–	43.5	70.0	–	25.6	31.8	41.7	61.5
	84	–	–	–	40.4	65.0	–	–	29.5	38.7	57.1
	90	–	–	–	37.7	60.6	–	–	27.5	36.1	53.3
132	30		–	46.8	70.8	85.0	30.3	60.5	75.1	85.0	85.0
	36	–	–	39.0	84.9	85.0	25.2	50.4	62.5	82.1	85.0
	42	–	–	33.4	60.7	85.0	–	43.2	53.6	70.3	85.0
	48	–	–	29.3	53.1	85.0	–	37.8	46.9	61.5	85.0
	54	–	–	–	47.2	75.9	–	33.6	41.7	54.7	80.8
	60	–	–	–	42.5	68.4	–	30.3	37.5	49.2	72.7
	66	–	–	–	38.6	62.1	–	27.5	34.1	44.8	66.1
	72	–	–	–	35.4	57.0	–	25.2	31.3	41.0	60.6
	78	–	–	–	32.7	52.6	–	–	28.9	37.9	55.9
	84	–	–	–	30.3	48.8	–	–	26.8	35.2	51.9
	90	–	–	–	28.3	45.6	–	–	25.0	32.8	48.5
144	30	–	–	36.0	65.4	85.0	27.7	55.5	68.8	85.0	85.0
	36	–	–	30.0	54.5	85.0	–	46.2	57.3	75.2	85.0
	42	–	–	25.7	46.7	75.2	–	39.6	49.1	64.5	85.0
	48	–	–	–	40.9	65.8	–	34.7	43.0	56.4	83.3
	54	–	–	–	36.3	58.5	–	30.8	38.2	50.1	74.1
	60	–	–	–	32.7	52.6	–	27.7	34.4	45.1	66.7
	66	–	–	–	29.7	47.9	–	25.2	31.3	41.0	60.6
	72	–	–	–	–	43.9	–	–	28.7	37.6	55.6
	78	–	–	–	–	40.5	–	–	26.5	34.7	51.3
152	30	–	–	–	55.6	85.0	26.3	52.5	65.2	85.0	85.0
	36	–	–	–	46.3	74.6	–	43.8	54.3	71.3	85.0
	42	–	–	–	39.7	63.9	–	37.5	46.6	61.1	85.0
	48	–	–	–	34.8	56.0	–	32.8	40.7	53.4	78.9
	60	–	–	–	30.9	44.8	–	26.3	32.6	42.8	63.2
	72	–	–	–	–	37.3	–	–	27.2	35.6	52.6
164	30	–	–	–	44.3	71.3	–	48.7	60.4	79.3	85.0
	36	–	–	–	36.9	59.4	–	40.6	50.3	66.0	85.0
	42	–	–	–	31.6	50.9	–	34.8	43.1	56.6	83.6
	48	–	–	–	27.7	44.5	–	30.4	37.8	49.5	73.2
	60	–	–	–	–	35.6	–	–	30.2	39.6	58.5

INSTRUCTIONS FOR TABLE USE:

1. DETERMINE REQUIRED WIND PRESSURE FOR THE OPENING.
2. DETERMINE THE MULLION LENGTH & LOAD WIDTH USING THE APPLICABLE ELEVATION ON SHEETS 1 & 2.
3. CHOOSE A TUBE SIZE THAT MEETS OR EXCEEDS THE REQUIRED PRESSURE FOR THE APPLICABLE MULLION LENGTH & LOAD WIDTH CONDITIONS.
4. CHOOSE A CONNECTION TYPE THAT MEETS OR EXCEEDS THE REQUIRED PRESSURE FOR THE APPLICABLE MULLION LENGTH & LOAD WIDTH CONDITIONS.

TABLE NOTES:

1. ALL TUBES SHALL BE MIN. 6063–T6 ALUMINUM.
2. FOR ALL CONNECTION TYPES, SEE SHEETS 3, 4, 5 & 6 FOR DETAIL.
3. INDIVIDUAL UNIT SIZES & SHUTTER REQUIREMENTS ARE LIMITED BY THEIR OWN INDIVIDUAL "CERTIFICATION".
4. IN ORDER TO SIMPLIFY TABLES, TABLE PRESSURES ARE LIMITED TO 85 PSF. USE OF THESE MULLIONS FOR PRESSURES HIGHER THAN 85 PSF SHALL BE REVIEWED UNDER SEPERATE APPROVAL.
5. THESE LOAD TABLES ARE CERTIFIED AS CORRECT IN CONTENT. HOWEVER, CHOOSING OF THE CORRECT MULLION & CONNECTION FROM THESE TABLES FOR ITS SPECIFIC USE IS THE RESPONSIBILITY OF THOSE USING THE TABLES AND SHOULD BE VERIFIED BY THE BUILDING OFFICIAL OR A FLORIDA CERTIFIED ENGINEER.

PRODUCT REVIEW
as complying with the Florida
Building Code
Acceptance No 09-0826.08
Expiration Date 7-17-2014
By Dirk Harris
Miami Dade Product Control
Division

NO.	REVISION DESCRIPTION	BY	DATE

DRAWN BY: W.W.S. | CHECKED BY: W.W.S.
PLOT: 1=1 | DATE: 08/20/09

DRAWING TITLE: ALUMINUM TUBE CLIPPED MULLIONS

MANUFACTURER: WEATHER SHIELD WINDOWS & DOORS
ONE WEATHER SHIELD PLAZA
MEDFORD, WI 54451
715-748-6555

CONSULTANTS: W. W. SCHAEFER ENGINEERING & CONSULTING, P.A.
8895 N. MILITARY TRAIL; SUITE C-204
PALM BEACH GARDENS, FL 33410
PHONE: 561-775-4902 FAX: 561-775-4903

CERTIFICATION
AUG 21 2009
WARREN W. SCHAEFER, P.E.
P.E. NO. 44135

DRAWING NO. 1580 | REV.
SHEET NO. 9 OF 9