MIAMI-DADE COUNTY
BUILDING CODE COMPLIANCE OFFICE (BCCO)
PRODUCT CONTROL DIVISION

MIAMI-DADE COUNTY, FLORIDA
METRO-DADE FLAGLER BUILDING
140 WEST FLAGLER STREET, SUITE 1603
MIAMI, FLORIDA 33130-1563
(305) 375-2901 FAX (305) 375-2908
www.buildingcodeonline.com

# NOTICE OF ACCEPTANCE (NOA)

**PGT Industries**
**1070 Technology Drive,**
**Nokomis, Fl. 34275**

**SCOPE:**

This NOA is being issued under the applicable rules and regulations governing the use of construction materials. The documentation submitted has been reviewed by Miami-Dade County Product Control Division and accepted by the Board of Rules and Appeals (BORA) to be used in Miami Dade County and other areas where allowed by the Authority Having Jurisdiction (AHJ).

This NOA shall not be valid after the expiration date stated below. The Miami-Dade County Product Control Division (In Miami Dade County) and/or the AHJ (in areas other than Miami Dade County) reserve the right to have this product or material tested for quality assurance purposes. If this product or material fails to perform in the accepted manner, the manufacturer will incur the expense of such testing and the AHJ may immediately revoke, modify, or suspend the use of such product or material within their jurisdiction. BORA reserves the right to revoke this acceptance, if it is determined by Miami-Dade County Product Control Division that this product or material fails to meet the requirements of the applicable building code.
This product is approved as described herein, and has been designed to comply with the Florida Building Code, including the High Velocity Hurricane Zone.

**DESCRIPTION: Series "SGD-770HP" Aluminum Sliding Glass Doors w / Reinforcements**

**APPROVAL DOCUMENT:** Drawing No.**PGT0005**, titled "Series 770 H.P. Aluminum SGD-SMI", sheets 1 through 10 of 10, prepared by PTC, LLC, dated 08/05/07 and last revised on 02-24-10, signed and sealed by Robert J. Amoruso, P.E., bearing the Miami-Dade County Product Control Approval stamp with the Notice of Acceptance number and approval date by the Miami-Dade County Product Control Division.

**MISSILE IMPACT RATING: Small Missile Impact**

Limitation:

1. See table 1in sheet 4 of this approved drawing set for applicable SGD unit sizes, design pressures, reinforcements, glass types, sill riser and anchors requirements.

**LABELING:** Each unit shall bear a permanent label with the manufacturer's name or logo, city, state and following statement: "Miami-Dade County Product Control Approved", unless otherwise noted herein.

**RENEWAL** of this NOA shall be considered after a renewal application has been filed and there has been no change in the applicable building code negatively affecting the performance of this product.

**TERMINATION** of this NOA will occur after the expiration date or if there has been a revision or change in the materials, use, and/or manufacture of the product or process. Misuse of this NOA as an endorsement of any product, for sales, advertising or any other purposes shall automatically terminate this NOA. Failure to comply with any section of this NOA shall be cause for termination and removal of NOA.

**ADVERTISEMENT:** The NOA number preceded by the words Miami-Dade County, Florida, and followed by the expiration date may be displayed in advertising literature. If any portion of the NOA is displayed, then it shall be done in its entirety.

**INSPECTION:** A copy of this entire NOA shall be provided to the user by the manufacturer or its distributors and shall be available for inspection at the job site at the request of the Building Official.
This NOA consists of this page 1 as well as evidence sheet E-1 and approval document mentioned above.
The submitted documentation was reviewed by **Ishaq I. Chanda, P. E.**



MIAMI-DADE COUNTY APPROVED

3/3/10

**PGT Industries**

## NOTICE OF ACCEPTANCE: EVIDENCE SUBMITTED

**A. DRAWINGS**

1. Manufacturer's die drawings and sections.
2. Drawing No.**PGT0005**, titled "Series 770 H.P. Aluminum SGD-SMI", sheets 1 through 10 of 10, prepared by PTC, LLC, dated 08/05/07 and last revised on 02-24-10, signed and sealed by Robert J. Amoruso, P.E.

**B. TESTS**

1. Test reports on 1) Air Infiltration Test, per TAS 202-94
   2) Uniform Static Air Pressure Test, Loading per TAS 202-94
   3) Water Resistance Test, per TAS 202-94.
   4) Forced Entry Test per FBC 2411.3.2.1 and TAS202-94.
   5) Small Missile Impact Test, per TAS 201-94
   6) Cyclic Wind Pressure Loading, per TAS 203-94

Along with marked-up drawings and installation diagram of Aluminum Sliding Glass Doors, prepared by Fenestration Testing Laboratory, Inc., Test Report No **FTL-6019** and **FTL-6020,** both dated 08/10/09, all signed and sealed by Julio Gonzales, P.E.

Note: The test reports No. **FTL 6019** have been revised and reissued on 12/29/09, signed and sealed by Julio Gonzales, P.E.

**C. CALCULATIONS**

1. Anchor verification and comparative analysis dated 08-24-09 and last revised on 12/15/09, prepared by PTC, LLC, Robert J. Amoruso, P.E.
2. Glazing complies with ASTME-1300-02 &-04

**D. QUALITY ASSURANCE**

1. Miami Dade Building Code Compliance Office (BCCO).

**E. MATERIAL CERTIFICATIONS**

1. Notice of Acceptance No. **05-1208.02** issued to E.I. DuPont DeNemours, for "DuPont Butacite ® PVB", expiring on 12/11/2010

**F. STATEMENTS**

1. Statement letter of conformance and no financial interest, dated 08-19-09, signed by Robert J. Amoruso, P.E.
2. Letter of Lab compliance, part of the above test reports.

**G. OTHER**

1. Test proposals No(s) 09-0177, 0177-A, B & C approved by BCCO.

Ishaq I. Chanda

**Ishaq I. Chanda, P.E.**
**Product Control Examiner**
**NOA No. 09-0826.11**
**Expiration Date: March 24, 2015**
**Approval Date: March 24, 2010**

# GENERAL NOTES: SERIES 770 H.P. SMI SLIDING GLASS DOOR

| DESIGN PRESSURE CHART (PSF) |
|---|
| SEE TABLES 1 & 1A, SHEET 4 |

1. GLAZING TYPE OPTIONS: (GLASS RECIPES ARE FROM EXTERIOR TO INTERIOR)
   GLASS STRENGTHS - T = TEMPERED HS = HEAT STRENGTHED
   INTERLAYER TYPES - DBPVB = .090 DUPONT BUTACITE PVB
   G7 - 7/16" LAMINATED: (2) LITES OF 3/16" T GLASS WITH AN .090 DBPVB.
   G7A - 9/16" LAMINATED: (2) LITES OF 1/4" T GLASS WITH AN .090 DBPVB.
   G8 - 1" LAMINATED I.G.: 3/16" T EXT. CAP + 3/8" AIR SPACE + 7/16" LAMINATED: (2) LITES OF 3/16" T GLASS WITH AN .090 DBPVB INTERLAYER.
   G8A - 1" LAMINATED I.G.: 1/4" T EXT. CAP + 5/16" AIR SPACE + 7/16" LAMINATED: (2) LITES OF 3/16" T GLASS WITH AN .090 DBPVB INTERLAYER.
2. DESIGN PRESSURES: A. NEGATIVE DESIGN LOADS BASED ON TESTED PRESSURE AND GLASS TABLES ASTM E 1300.
   B. POSITIVE DESIGN LOADS BASED ON WATER TEST PRESSURE AND GLASS TABLES ASTM E 1300.
3. ANCHORAGE: THE 33 1/3% STRESS INCREASE HAS NOT BEEN USED IN THE DESIGN OF THIS PRODUCT. MATERIALS, INCLUDING BUT NOT LIMITED TO STEEL SCREWS, THAT COME INTO CONTACT WITH OTHER DISSIMILAR MATERIALS SHALL MEET THE REQUIREMENTS OF THE FLORIDA BUILDING CODE. FOR ANCHORAGE DETAILS SEE SHEETS 4 THROUGH 6.
4. SHUTTERS ARE NOT REQUIRED 30' ABOVE GRADE.
5. INSTALLATION SCREWS, FRAME AND PANEL CORNERS TO BE SEALED WITH NARROW JOINT SEALANT.
6. REFERENCES: TEST REPORTS FTL-6019 AND FTL-6020, DATED 8/7/09.
   ELCO TEXTRON NOA: 07-0425.01, 03-0225.05, ANSI/AF&PA NDS-2005 FOR WOOD CONSTRUCTION AND ADM-2005 ALUMINUM DESIGN MANUAL
7. THIS PRODUCT HAS BEEN DESIGNED & TESTED TO COMPLY WITH THE REQUIREMENTS OF THE FLORIDA BUILDING CODE, 2007 EDITION INCLUDING THE HIGH VELOCITY HURRICANE ZONE (HVHZ).
8. DOOR SIZES MUST BE VERIFIED FOR COMPLIANCE WITH EGRESS REQUIREMENTS PER FLORIDA BUILDING CODE, AS APPLICABLE.
9. CONFIGURATIONS: STRAIGHT DOORS - MAXIMUM 2 TRACKS BY 9 FT. (108") HIGH WITH A MAXIMUM OF FOUR 4 FT. NOMINAL WIDE DOOR PANELS.
   SEE EXAMPLE ELEVATIONS AND PANEL CONFIGURATIONS ON SHEET 7.
   D.L.O. WIDTH = NOMINAL PANEL WIDTH - 7"
   D.L.O. HEIGHT = NOMINAL PANEL HEIGHT - 8.25"

NOTES PERTAINING TO ANCHORAGE DETAILS ON SHEET 5-6:

1. FOR CONCRETE APPLICATIONS IN MIAMI-DADE COUNTY, USE ONLY MIAMI-DADE COUNTY APPROVED ELCO 1/4" OR 5/16" ULTRACON (FORMERLY TAPCON) CONCRETE SCREWS OR 1/4" ELCO SS4 CRETE-FLEX . SEE TABLE ON THIS SHEET FOR EMBEDMENT, EDGE DISTANCE AND SUBSTRATE REQUIREMENTS.
2. FOR WOOD APPLICATIONS USE #12 STEEL SCREWS (G5). 1/4" ELCO SS4 CRETE-FLEX MAY BE USED INSTEAD OF #12 SCREWS.
3. WOOD BUCKS DEPICTED AS 1x ARE LESS THAN 1 1/2" THICK. 1x WOOD BUCKS ARE OPTIONAL IF UNIT IS INSTALLED DIRECTLY TO SOLID CONCRETE. WOOD BUCKS DEPICTED AS 2x ARE 1 1/2" THICK OR GREATER. 1X AND 2X BUCKS (WHEN USED) SHALL BE DESIGNED TO PROPERLY TRANSFER LOADS TO THE STRUCTURE. BUCK DESIGN AND INSTALLATION IS THE RESPONSIBILITY OF THE ENGINEER OR ARCHITECT OF RECORD.
4. FOR ATTACHMENT TO ALUMINUM: THE ALUMINUM SHALL BE A MINIMUM STRENGTH OF 6063-T5 AND A MINIMUM OF 1/8" THICK. THE ALUMINUM STRUCTURAL MEMBER SHALL BE OF A SIZE TO PROVIDE FULL SUPPORT TO THE DOOR FRAME SIMILAR TO THAT SHOWN IN THE DETAILS USING 2x WOOD BUCKS. THE ANCHORS SHALL BE #12 SHEET METAL SCREWS WITH FULL THREAD ENGAGEMENT INTO THE ALUMINUM. IF THESE CRITERIA ARE MET, THE FULL DESIGN PRESSURES USING ANCHORAGE REQUIREMENTS SHOWN IN TABLES 1, SHTS. 4, FOR ANCHOR TYPE 4 ARE ACCEPTABLE.
5. IF SILL IS TIGHT TO SUBSTRATE, GROUT OR OTHER MATERIAL IS NOT REQUIRED. IF USED, NON-SHRINK, NON-METALLIC GROUT, 3400 PSI MIN., (DONE BY OTHERS) MUST FULLY SUPPORT THE ENTIRE LENGTH OF THE SILL THAT IS NOT TIGHT TO THE SUBSTRATE, AND TRANSFER SHEAR LOAD TO SUBSTRATE. IF SUBSTRATE IS WOOD, 30# FELT PAPER OR MASTIC IS REQUIRED BETWEEN THE GROUT AND WOOD SUBSTRATE, OR AS APPROVED BY THE AUTHORITY HAVING JURISDICTION.

NOA DRAWING MAP


| | SHEET |
|---|---|
| GENERAL NOTES | 1 |
| ELEVATIONS | 2 |
| GLAZING DETAILS | 3 |
| ANCHORAGE | 4-6 |
| DESIGN PRESSURES | 4 |
| ELEVATIONS | 7 |
| CONFIGURATIONS | 7 |
| VERT. SECTIONS | 8 |
| HORIZ. SECTIONS | 8 |
| PARTS LIST | 9 |
| EXTRUSIONS | 10 |


Concrete Screw Anchorage Minimum Embedment and Minimum Edge Distance Requirements

| | | Head and Sill | | Jambs | | | |
|---|---|---|---|---|---|---|---|
| | | Concrete | | Un-Grouted CMU | | Grouted CMU | |
| Type | Dia. | Min. Emb. | Min. Ed | Min. Emb. | Min. Ed | Min. Emb. | Min. Ed |
| Elco Ultracon | 1/4" | 1 3/8 | 2 1/2 | 1 1/4 | 2 1/2 | 1 3/4 | 2 1/2 |
| | 5/16" | 1 3/4 | 1 1/4 | 1 1/4 | 1 9/16 | 1 3/4 | 2 1/2 |
| Elco Crete-Flex SS4 | 1/4" | 1 3/4 | 2 1/2 | 1 1/4 | 2 1/2 | Not Recommended | |

Concrete Strength Requirements

| Type | Dia. | fc' |
|---|---|---|
| Elco Ultracon | 1/4" | 2700 psi |
| | 5/16" | 3500 psi |
| Elco Crete-Flex SS4 | 1/4" | 3350 psi |

Masonry Strength Requirements

| | |
|---|---|
| Ungrounted CMU | ASTM C-90 |
| Grouted CMU | ASTM C-90 with grout conforming to Sections 2105.2.2.1.2 and R609 of the FBC. |

Definitions:

| |
|---|
| Emb. = Embedment |
| Ed = Edge Distance |
| Min. = Minimum |

*CONCRETE SCREWS STRENGTHS:*
*Fy MIN. = 135 KSI*
*Fu MIN. = 177 KSI*

Wood Screws (Head, Sill & Jambs) in.

| Type | Min. Emb. | Min. Ed |
|---|---|---|
| #12 Wood Screw | 1 3/8" | 1" |
| Elco Crete-Flex SS4 | 1 3/8" | 1" |

*UNLESS OTHERWISE NOTED*

Approved as complying with the Florida Building Code
Date MAR 24 2010
NOA# 09-0828.11
Miami Dade Product Control Division
By [illegible]

ROBERT JAMES AMORUSO LICENSE No 49752 STATE OF FLORIDA PROFESSIONAL ENGINEER

Robert J. Amoruso, P.E.
PE #49752

| Revsd By: | Date: | Revisions: | |
|---|---|---|---|
| | | | |
| SMC | 02/23/10 | B | PER MIAMI DADE COMMENTS |
| SMC | 11/16/09 | A | PER MIAMI DADE COMMENTS |
| Drawn By: SMC | Date: 08/05/07 | Checked By: RJA | Date: RJA |

1070 TECHNOLOGY DRIVE
NOKOMIS, FL 34275

P.O. BOX 1529
NOKOMIS, FL 34274

PGT®

Description: GENERAL NOTES AND MAP

Title: SERIES 770 H.P. ALUMINUM SGD - SMI

| Series/Model: | Scale: | Sheet: | Drawing No. | Rev: |
|---|---|---|---|---|
| SGD770 H.P. | NTS | 1 of 10 | PGT0005 | B |

PREPARED BY: PTC, LLC 1535 N. COGSWELL ST., STE. C25, ROCKLEDGE, FL 32955. PH: 321-690-1788, FAX 321-690-1789

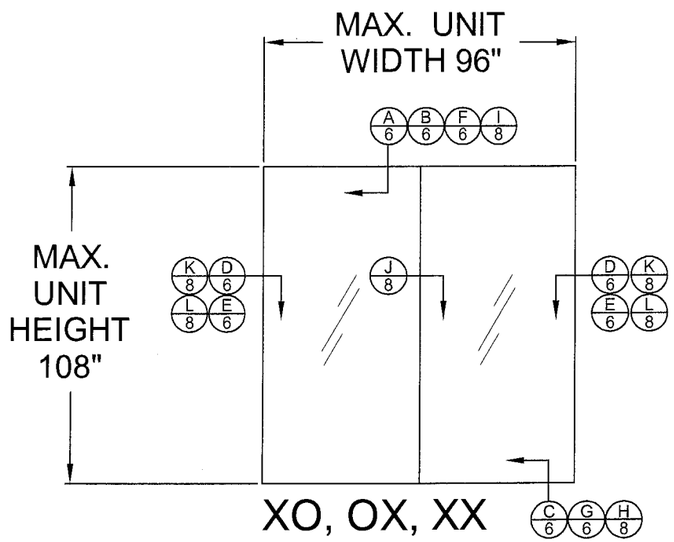


XO, OX, XX

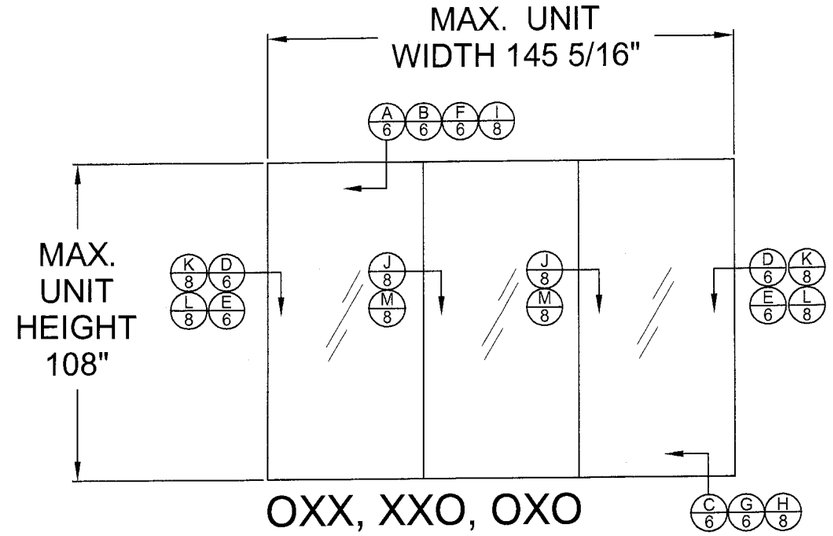


OXX, XXO, OXO

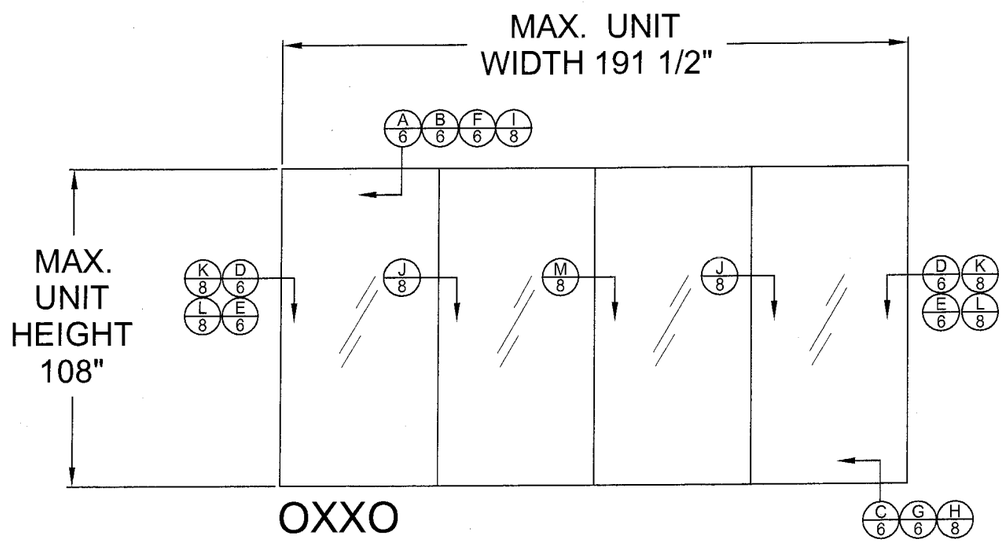


OXXO

## APPROVED CONFIGURATIONS

Approved as complying with the Florida Building Code
Date MAR 24, 2010
NOA# 09-0823.11
Miami Dade Product Control Division
By Shag I. Chante

ROBERT JAMES AMORUSO
LICENSE
No 49752
STATE OF FLORIDA
PROFESSIONAL ENGINEER

Robert J. Amoruso, P.E.
PE #49752

| Revsd By: | Date: | Revisions: | |
|---|---|---|---|
| Revsd By: SMC | Date: 02/23/10 | Revisions: B | PER MIAMI DADE COMMENTS |
| Revsd By: SMC | Date: 11/16/09 | Revisions: A | PER MIAMI DADE COMMENTS |
| Drawn By: SMC | Date: 08/05/09 | Checked By: RJA | Date: |

1070 TECHNOLOGY DRIVE
NOKOMIS, FL 34275

P.O. BOX 1529
NOKOMIS, FL 34274

PGT®

Description: ELEVATIONS

Title: SERIES 770 H.P. ALUMINUM SGD - SMI

| Series/Model: | Scale: | Sheet: | Drawing No. | Rev: |
|---|---|---|---|---|
| SGD770 H.P. | NTS | 2 of 10 | PGT0005 | B |

PREPARED BY: PTC, LLC 1535 N. COGSWELL ST., STE. C25, ROCKLEDGE, FL 32955, PH: 321-690-1788, FAX 321-690-1789

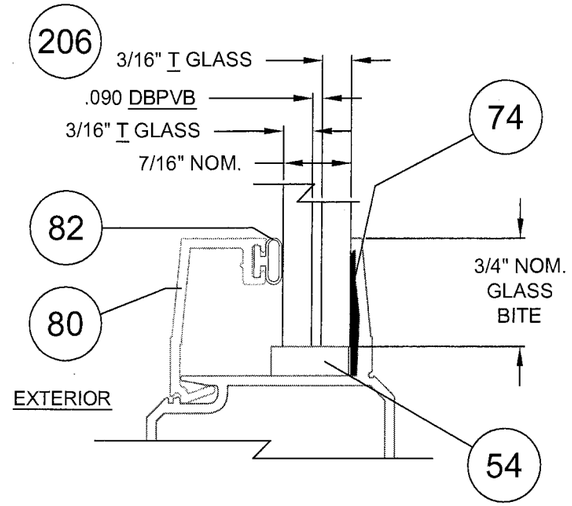


7/16" LAMINATED GLASS TYPES G7

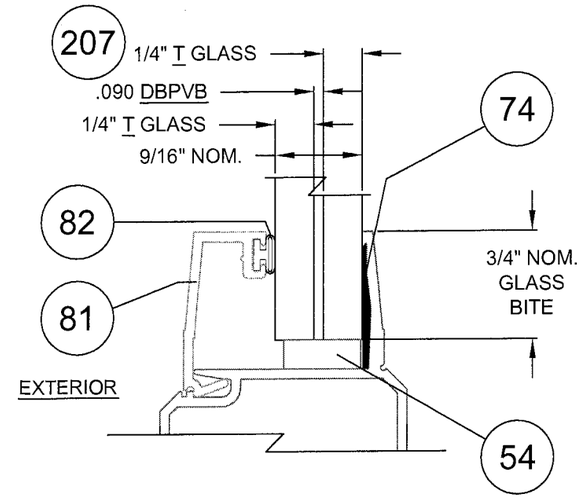


9/16" LAMINATED GLASS TYPES G7A

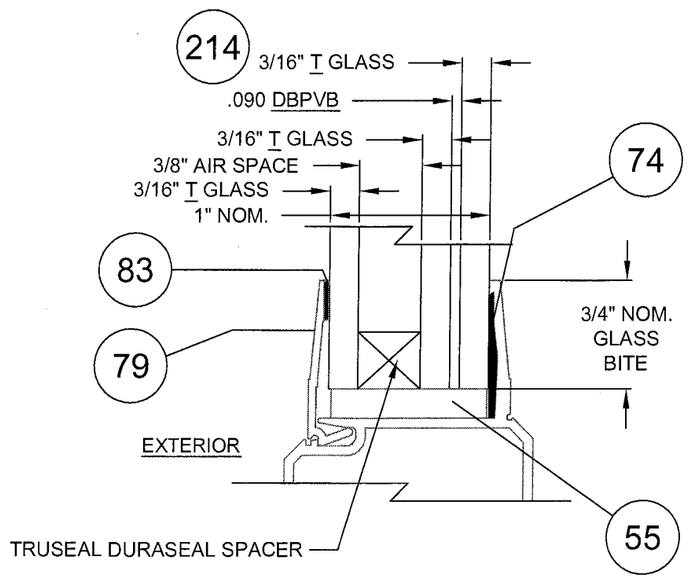


1" LAMINATED I.G. TYPES G8

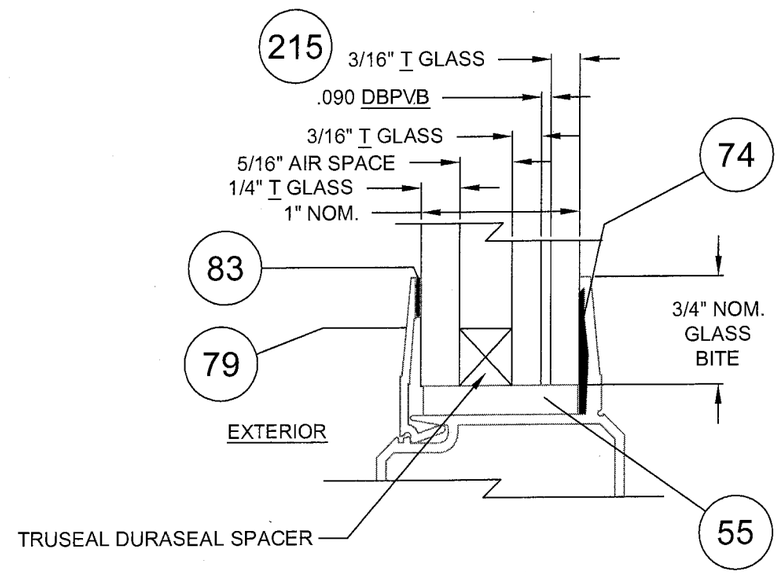


1" LAMINATED I.G. TYPES G8A

NOTE: DBPVB = DUPONT BUTACITE PVB

Approved as complying with the Florida Building Code
Date MAR 24, 2010
NOA# 09-0823.11
Miami Dade Product Control Division
By

ROBERT JAMES AMORUSO
LICENSE
No 49752
STATE OF FLORIDA
PROFESSIONAL ENGINEER

Robert J. Amoruso, P.E.
PE #49752

| Revsd By: | Date: | Revisions: | |
|---|---|---|---|
| Revsd By: SMC | Date: 02/23/10 | Revisions: B | PER MIAMI DADE COMMENTS |
| Revsd By: SMC | Date: 11/16/09 | Revisions: A | PER MIAMI DADE COMMENTS |
| Drawn By: SMC | Date: 08/05/09 | Checked By: RJA | Date: |

1070 TECHNOLOGY DRIVE
NOKOMIS, FL 34275

P.O. BOX 1529
NOKOMIS, FL 34274

PGT®

Description: GLAZING DETAILS

Title: SERIES 770 H.P. ALUMINUM SGD - SMI

| Series/Model: | Scale: | Sheet: | Drawing No. | Rev: |
|---|---|---|---|---|
| SGD770 H.P. | NTS | 3 of 10 | PGT0005 | B |

PREPARED BY: PTC, LLC 1535 N. COGSWELL ST., STE. C25, ROCKLEDGE, FL 32955, PH: 321-690-1788, FAX 321-690-1789

DESIGN PRESSURE AND ANCHORAGE - HEAVY DUTY STILES - REINFORCED INTERLOCKS - HEAVY DUTY ASTRAGAL

TABLE 1.

> HEAD & SILL (H&S) INTERLOCK & STRAIGHT & CORNER ASTRAGAL CLUSTER PLUS INTERMEDIATE ANCHOR QTY. PER PANEL H & S,
> JAMB ANCHOR QTY.

G7 - 7/16" LAMINATED GLASS - (3/16" TEMP. / PVB / 3/16" TEMP.)
G7A - 9/16" LAMINATED GLASS - (1/4" TEMP. / PVB / 1/4" TEMP.)
G8 - 7/16" 1" LAMINATED I.G.U. - (3/16" TEMP / AIR / 3/16" TEMP. / PVB / 3/16" TEMP.)
G8A - 1" LAMINATED I.G.U. - (1/4" TEMP. / AIR / 3/16" TEMP. / PVB / 3/16" TEMP.)

Anchor Types:
1) *1/4" ELCO ULTRACON (FORMERLY TAPCON)
2) *1/4" SS4 CRETE-FLEX
3) *5/16" ULTRACON
4) *#12 STEEL SCREW (G5)
* SEE ANCHORAGE NOTES 1 & 2 ON SHEET 1.

| NOM. PANEL WIDTH | | FRAME SIDE | UNIT HEIGHT 80 | | | 84 | | | 90 | | | 96 | | | 102 | | | 108 | | |
|---|---|---|---|---|---|---|---|---|---|---|---|---|---|---|---|---|---|---|---|---|
| | | | 1, 2 - CONC | 3 - CONC | 2, 4 - WOOD | 1, 2 - CONC | 3 - CONC | 2, 4 - WOOD | 1, 2 - CONC | 3 - CONC | 2, 4 - WOOD | 1, 2 - CONC | 3 - CONC | 2, 4 - WOOD | 1, 2 - CONC | 3 - CONC | 2, 4 - WOOD | 1, 2 - CONC | 3 - CONC | 2, 4 - WOOD |
| GLASS TYPE - 7, 7A, 8, 8A | | | +90 -110.0 | | | +90 -110.0 | | | +90 -110.0 | | | +90 -110.0 | | | +90 -110.0 | | | +90 -110.0 | | |
| 24 | Anchors | H&S | C6+2 | C6+2 | C6+2 | C6+2 | C6+2 | C6+2 | C6+2 | C6+2 | C6+2 | C6+2 | C6+2 | C6+2 | C6+2 | C6+2 | C6+2 | C6+2 | C6+2 | C6+2 |
| | | JAMB | 10 | 10 | 10 | 10 | 10 | 10 | 10 | 10 | 10 | 10 | 10 | 10 | 10 | 10 | 10 | 10 | 10 | 10 |
| GLASS TYPE - 7, 7A, 8, 8A | | | +90 -110.0 | | | +90 -110.0 | | | +90 -110.0 | | | +90 -110.0 | | | +90 -110.0 | | | +90 -110.0 | | |
| 30 | Anchors | H&S | C6+2 | C6+2 | C6+2 | C6+2 | C6+2 | C6+2 | C6+2 | C6+2 | C6+2 | C6+2 | C6+2 | C6+2 | C6+2 | C6+2 | C6+2 | C6+2 | C6+2 | C6+2 |
| | | JAMB | 10 | 10 | 10 | 10 | 10 | 10 | 10 | 10 | 10 | 10 | 10 | 10 | 10 | 10 | 10 | 10 | 10 | 10 |
| GLASS TYPE - 7, 7A, 8, 8A | | | +90 -110.0 | | | +90 -110.0 | | | +90 -110.0 | | | +90 -110.0 | | | +90 -110.0 | | | +90 -110.0 | | |
| 36 | Anchors | H&S | C6+2 | C6+2 | C6+2 | C6+2 | C6+2 | C6+2 | C6+2 | C6+2 | C6+2 | C6+2 | C6+2 | C6+2 | C6+2 | C6+2 | C6+2 | C6+2 | C6+2 | C7+2 |
| | | JAMB | 10 | 10 | 10 | 10 | 10 | 10 | 10 | 10 | 10 | 10 | 10 | 10 | 10 | 10 | 10 | 10 | 10 | 10 |
| GLASS TYPE - 7, 7A, 8, 8A | | | +90 -110.0 | | | +90 -110.0 | | | +90 -110.0 | | | +90 -110.0 | | | +90 -110.0 | | | +90 -110.0 | | |
| 42 | Anchors | H&S | C6+2 | C6+2 | C6+2 | C6+2 | C6+2 | C6+2 | C6+2 | C6+2 | C6+2 | C6+2 | C6+2 | C7+2 | C6+2 | C6+2 | C7+2 | C6+2 | C6+2 | C8+2 |
| | | JAMB | 10 | 10 | 10 | 10 | 10 | 10 | 10 | 10 | 10 | 10 | 10 | 10 | 10 | 10 | 12 | 10 | 10 | 12 |
| GLASS TYPE - 7, 7A, 8, 8A | | | +90 -110.0 | | | +90 -110.0 | | | +90 -110.0 | | | +90 -110.0 | | | +90 -110.0 | | | +90 -110.0 | | |
| 48 | Anchors | H&S | C6+2 | C6+2 | C6+3 | C6+2 | C6+2 | C6+3 | C6+2 | C6+2 | C7+3 | C6+2 | C6+2 | C7+3 | C6+2 | C6+2 | C8+3 | C6+2 | C6+2 | C8+3 |
| | | JAMB | 10 | 10 | 10 | 10 | 10 | 10 | 10 | 10 | 10 | 10 | 10 | 12 | 10 | 10 | 12 | 10 | 10 | 14 |

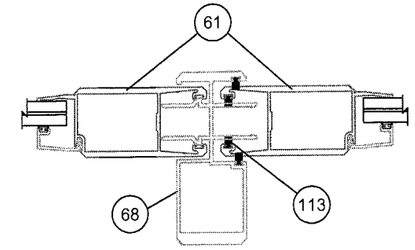


HEAVY DUTY ASTRAGAL
HEAVY DUTY STILES

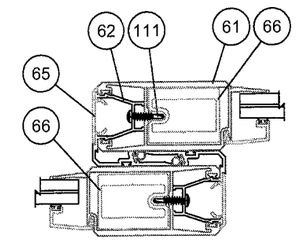


ALL INTERLOCKS TO BE REINFORCED

1. POSITIVE PRESSURES IN TABLE ARE BASED ON THE USE OF THE 4" SILL.
2. WHEN USING THE 2 1/2" SILL, POSITIVE DP IS 46.67 PSF MAX. AND WITH THE 3 1/4" SILL, POSITIVE PRESSURES IS 60.0 PSF MAX. (NEGATIVE PRESSURES UNCHANGED). SEE TABLE 1A ON THIS SHEET.
3. 2 1/2", 3 1/4" AND 4" SILL HEIGHTS ARE TESTED FOR WATER INFILTRATION WHEREAS THE 1 1/2" SILL IS NOT AND MUST ONLY BE USED WHERE WATER RESISTANCE IS NOT REQUIRED. POSITIVE DESIGN PRESSURES SHOWN IN TABLE 1 MAY BE USED WHEN THE DOOR IS PROTECTED BY AN OVERHANG COMPLYING WITH THE FLORIDA BUILDING CODE (SEE ADJACENT DIAGRAM); THIS CONDITION IS NOT RATED FOR WATER INFILTRATION.
4. SEE SHEET 6 FOR ANCHORAGE SPACING AND EMBEDMENT INFORMATION.
5. DOOR SIZE TO COMPLY WITH FBC EGRESS REQUIREMENTS.

DLO WIDTH = NOM. PANEL WIDTH - 7"
DLO HEIGHT = NOM. PANEL HEIGHT - 8.25"

TABLE 1A.

| SILL HT. VS POS. DP | |
|---|---|
| SILL RISE HEIGHT | (+) DESIGN LOAD |
| FLUSH - 1-1/2" | N/A |
| LOW - 2-1/2" | + 46.67 PSF |
| MED - 3-1/4" | + 60.0 PSF |
| HIGH - 4" | + 90.0 PSF |
| SEE NOTES 1-3 | |

◯ = EXAMPLE ON SHEET 5

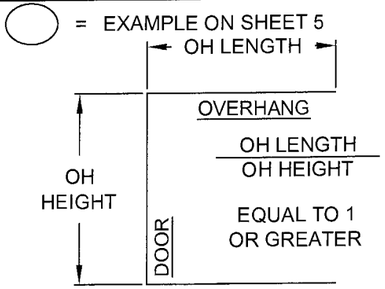


SEE NOTE 3

Approved as complying with the Florida Building Code
Date MAR 24, 2010
NOA# 09-0823.11
Miami Date Product Control Division
By

ROBERT JAMES AMORUSO LICENSE No 49752 STATE OF FLORIDA PROFESSIONAL ENGINEER

Robert J. Amoruso, P.E.
PE #49752

| Revsd By: | Date: | Revisions: | |
|---|---|---|---|
| | | | |
| SMC | 02/23/10 | B | PER MIAMI DADE COMMENTS |
| SMC | 11/16/09 | A | PER MIAMI DADE COMMENTS |
| Drawn By: SMC | Date: 8/5/09 | Checked By: | Date: |

1070 TECHNOLOGY DRIVE
NOKOMIS, FL 34275

P.O. BOX 1529
NOKOMIS, FL 34274

Description: DP AND ANCHORAGE CHART

Title: SERIES 770 H.P. ALUMINUM SGD - SMI

| Series/Model: | Scale: | Sheet: | Drawing No. | Rev: |
|---|---|---|---|---|
| SGD770 H.P. | NTS | 4 of 10 | PGT0005 | B |

PREPARED BY: PTC, LLC 1535 N. COGSWELL ST., STE. C25, ROCKLEDGE, FL 32955. PH: 321-690-1788, FAX 321-690-1789

## ANCHORAGE REQUIREMENTS NOTES:

1. APPROVED ANCHOR TYPES: 1) 1/4" ELCO ULTRACON (FORMERLY TAPCON) 2) 1/4" ELCO SS4 CRETE-FLEX 3) 5/16" ULTRACON 4) #12 STEEL SCREW (G5)
2. ANCHOR LOCATION SPACING FOR ANCHOR QUANTITIES SPECIFIED IN TABLE 1 ON SHEET 4:

HEAD & SILL..... 8" MAX. FROM FRAME CORNERS. USE SPECIFIED CLUSTER FROM TABLE ON SHEET 4 AT EACH INTERLOCK AND ASTRAGAL LOCATION, PLUS SPECIFIED QUANTITY OF ADDITIONAL INTERMEDIATE ANCHORS PER PANEL (THE 8" FROM CORNER ANCHORS CAN BE INCLUDED). ADDITIONAL ANCHORS 24" MAX. ON CENTER. SEE EXAMPLE ANCHORAGE PLANS BELOW AND EXAMPLE CLUSTERS AT ASTRAGAL / INTERLOCKS ON SHEET 6.

JAMBS..... 6" MAX. FROM BOTTOM AND 21" MAX. O.C. UTILIZING JAMB ANCHOR QUANTITIES FROM TABLE ON SHEET 4.

"ANCHORS PER PANEL" ARE THOSE AT THE HEAD AND SILL BETWEEN CLUSTERS OR THOSE BETWEEN A CLUSTER AND A FRAME JAMB.

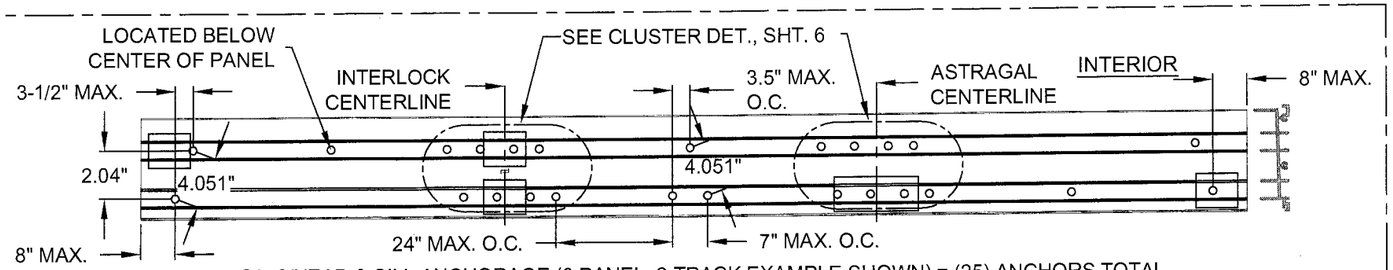


C8+3 HEAD & SILL ANCHORAGE (3 PANEL, 2-TRACK EXAMPLE SHOWN) = (25) ANCHORS TOTAL

EXAMPLE OXX ANCHORAGE PLAN:

(3) PANEL, 48" x 108" DOOR FROM TABLE ON SHEET 4, ANCHOR TYPES 2 & 4 IN WOOD SUBSTRATE

EXTERIOR

C8+3 = (36) ANCHORS TOTAL AT HEAD AND AT SILL

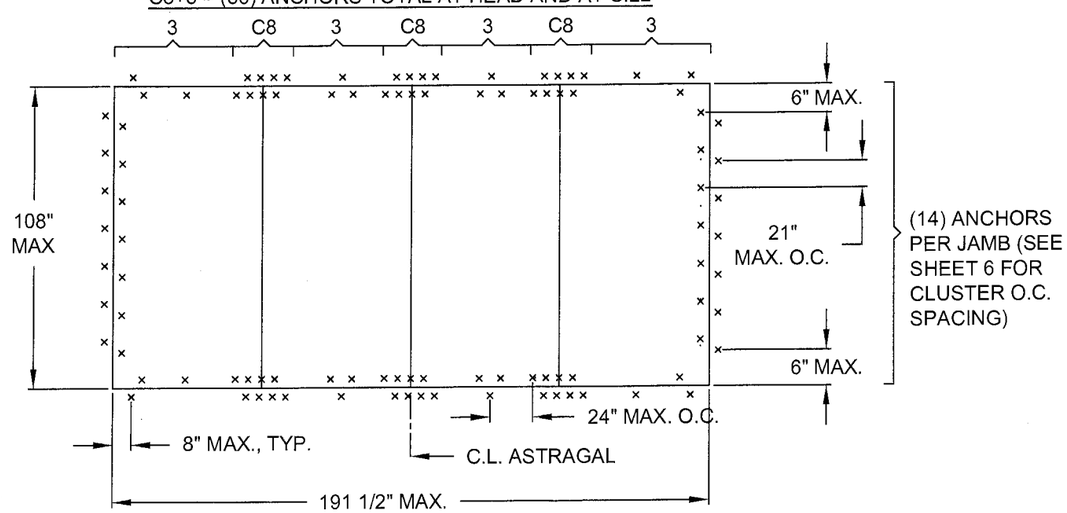


EXAMPLE OXXO ANCHORAGE PLAN:

(4) PANEL, 48" x 108" DOOR FROM TABLE ON SHEET 4, ANCHOR TYPES 2 & 4 IN WOOD SUBSTRATE

Approved as complying with the Florida Building Code
Date MAR 24 2010
NOA# 09-0823.11
Miami Dade Product Control Division
By

ROBERT JAMES AMORUSO LICENSE No 49752 STATE OF FLORIDA PROFESSIONAL ENGINEER

Robert J. Amoruso, P.E.
PE #49752

| Revsd By: | Date: | Revisions: | |
|---|---|---|---|
| Revsd By: SMC | Date: 02/23/10 | Revisions: B | PER MIAMI DADE COMMENTS |
| Revsd By: SMC | Date: 11/16/09 | Revisions: A | PER MIAMI DADE COMMENTS |
| Drawn By: SMC | Date: 08/05/09 | Checked By: RJA | Date: |

1070 TECHNOLOGY DRIVE
NOKOMIS, FL 34275

P.O. BOX 1529
NOKOMIS, FL 34274

PGT®

Description: ANCHORAGE SPACING & EXAMPLE PLANS

Title: SERIES 770 H.P. ALUMINUM SGD - SMI

| Series/Model: | Scale: | Sheet: | Drawing No. | Rev: |
|---|---|---|---|---|
| SGD770 H.P. | NTS | 5 of 10 | PGT0005 | B |

PREPARED BY: PTC, LLC 1535 N. COGSWELL ST., STE. C25, ROCKLEDGE, FL 32955, PH: 321-690-1788, FAX 321-690-1789

EXTERIOR INTERIOR
(ALL VERT. SECTIONS)

NOTE:
ALL DIMENSIONS SHOWN ARE BASED ON MINIMUM ALLOWED.

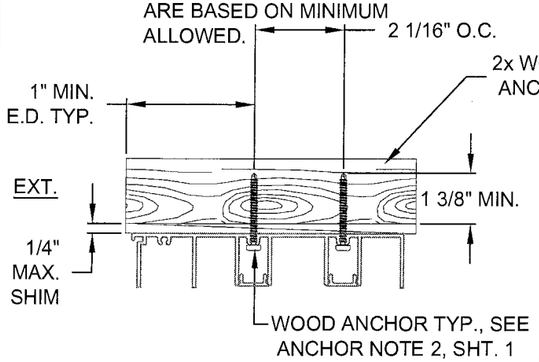


DETAIL A, 2-TRACK W/ SCREEN FRAME HEAD WOOD INSTALLATION

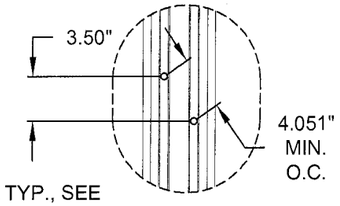


TYPICAL JAMB CLUSTER FOR DETAILS "D" & "E"

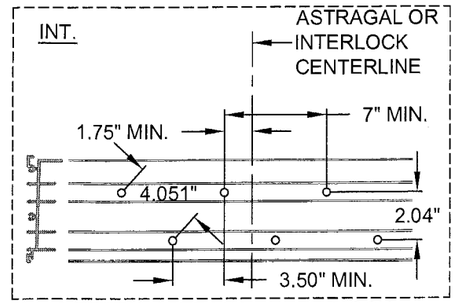


2-TRACK, ASTRAGAL / INTERLOCK 6 ANCHOR CLUSTER

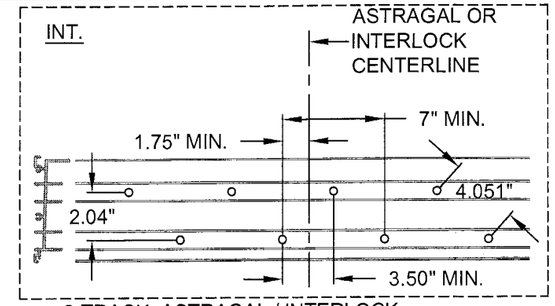


2-TRACK, ASTRAGAL / INTERLOCK 8 ANCHOR CLUSTER

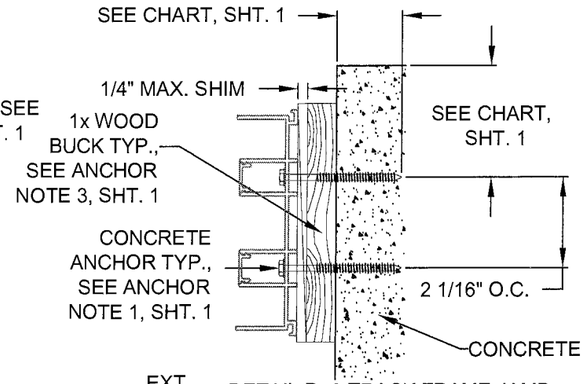


DETAIL D, 2-TRACK FRAME JAMB CONCRETE INSTALLATION

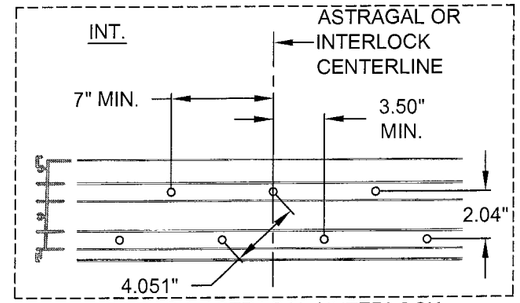


2-TRACK, ASTRAGAL / INTERLOCK ANCHOR CLUSTER - C7

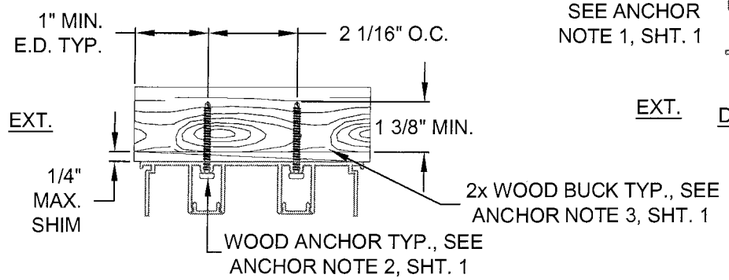


DETAIL B, 2-TRACK FRAME HEAD WOOD INSTALLATION

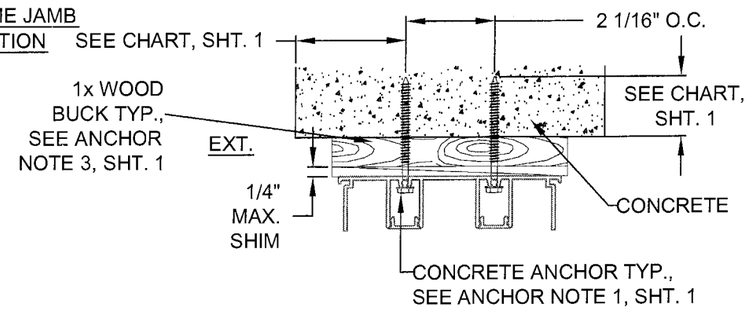


DETAIL F, 2-TRACK FRAME HEAD CONCRETE INSTALLATION

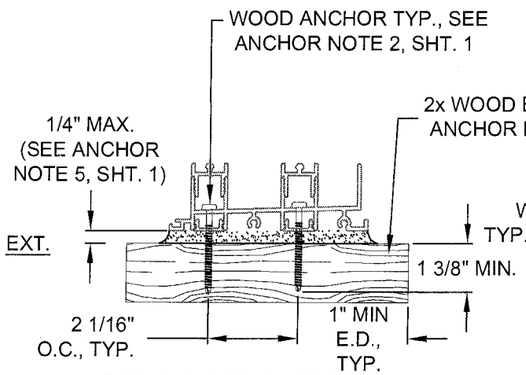


DETAIL C, 2-TRACK FRAME SILL WOOD INSTALLATION

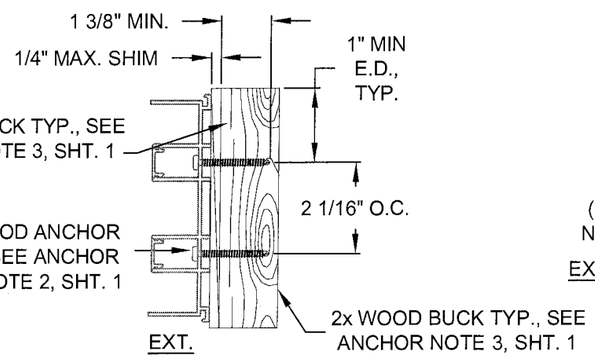


DETAIL E, 2-TRACK FRAME JAMB WOOD INSTALLATION

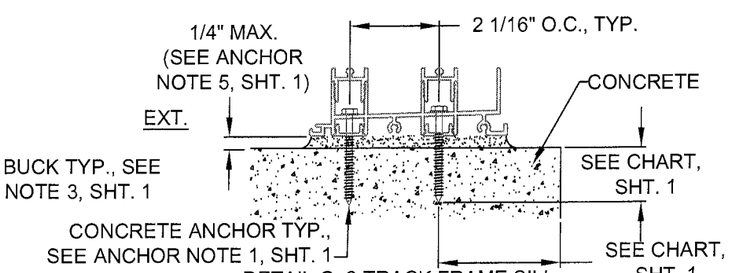


DETAIL G, 2-TRACK FRAME SILL CONCRETE INSTALLATION

Approved as complying with the Florida Building Code
Date MAR 24, 2010
NOA# 09-0823.11
Miami Dade Product Control Division
By

ROBERT JAMES AMORUSO LICENSE No. 49752 STATE OF FLORIDA PROFESSIONAL ENGINEER

Robert J. Amoruso, P.E.
PE #49752

| Revsd By: | Date: | Revisions: | |
|---|---|---|---|
| Revsd By: SMC | Date: 02/23/10 | Revisions: B | PER MIAMI DADE COMMENTS |
| Revsd By: SMC | Date: 11/16/09 | Revisions: A | PER MIAMI DADE COMMENTS |
| Drawn By: SMC | Date: 08/05/09 | Checked By: RJA | Date: |

1070 TECHNOLOGY DRIVE
NOKOMIS, FL 34275

P.O. BOX 1529
NOKOMIS, FL 34274

Description: ANCHORAGE, EXAMPLE CLUSTERS

Title: SERIES 770 H.P. ALUMINUM SGD - SMI

| Series/Model: | Scale: | Sheet: | Drawing No. | Rev: |
|---|---|---|---|---|
| SGD770 H.P. | NTS | 6 of 10 | PGT0005 | B |

PREPARED BY: PTC, LLC 1535 N. COGSWELL ST., STE. C25, ROCKLEDGE, FL 32955, PH: 321-690-1788, FAX 321-690-1789

| PANEL LETTER | | |
|---|---|---|
| K | SINGLE INTERLOCK | LOCKSTILE |
| A | SINGLE INTERLOCK | LOCKSTILE |
| D | LOCKSTILE | SINGLE INTERLOCK |
| M | LOCKSTILE | SINGLE INTERLOCK |
| L (BOX OUT) | SINGLE INTERLOCK | ASTRAGAL OUT |
| LR (BOX OUT) | ASTRAGAL OUT | SINGLE INTERLOCK |
| N (BOX OUT) | ASTRAGAL IN | SINGLE INTERLOCK |
| C (BOX IN) | SINGLE INTERLOCK | ASTRAGAL IN |
| P | SINGLE INTERLOCK | FIXED LOCKSTILE |
| R | FIXED LOCKSTILE | SINGLE INTERLOCK |
| T (BOX OUT) | ASTRAGAL OUT | FIXED LOCKSTILE |
| T (BOX IN) | ASTRAGAL IN | FIXED LOCKSTILE |
| S (BOX OUT) | FIXED LOCKSTILE | ASTRAGAL OUT |
| S (BOX IN) | FIXED LOCKSTILE | ASTRAGAL IN |

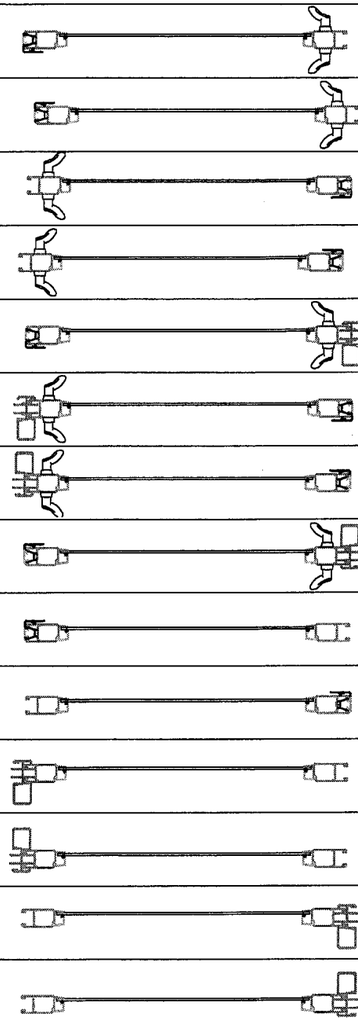

INTERIOR
(ALL PANEL TYPES)
EXTERIOR

NOTE:
REINFORCEMENT REQUIRED AT ALL INTERLOCKS.

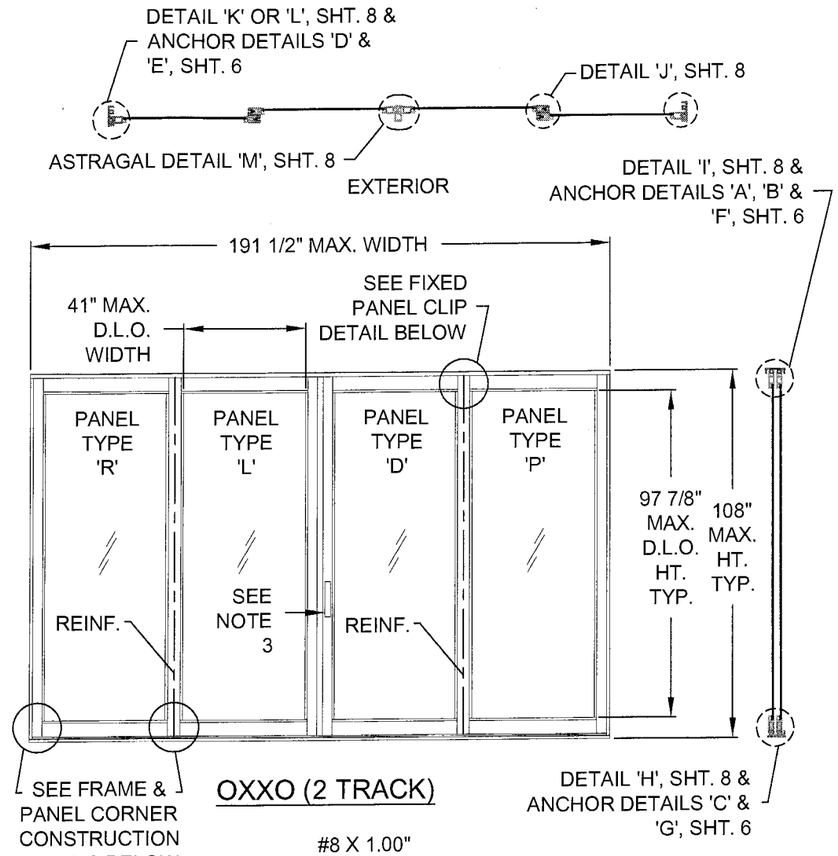


OXXO (2 TRACK)

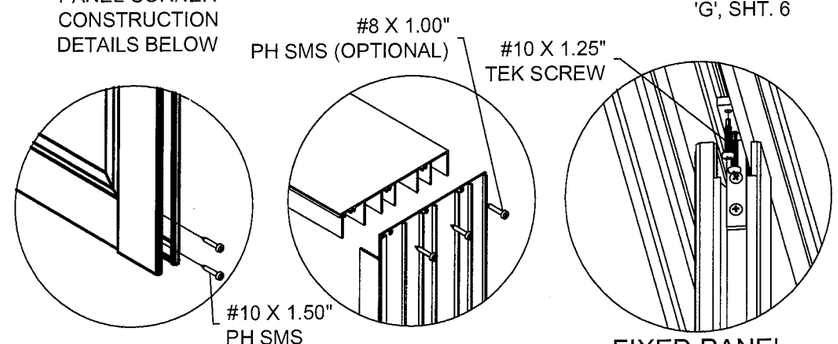


PANEL CORNER DETAIL

FRAME CORNER DETAIL

FIXED PANEL CLIP DETAIL
HEAD SHOWN, APPLICABLE TO SILL

NOTES:
1. SEE THIS SHEET FOR INDIVIDUAL PANEL CONFIGURATIONS. MAX. NOMINAL PANEL WIDTH = 48". SEE SHT. 8 FOR SECTION DETAILS AND SHTS. 4-6 FOR ANCHORAGE DETAILS.
2. MAX. DLO WIDTH = 41" MAX. MAX. DLO HEIGHT = 97 7/8" MAX.
3. (1) LOCK (ITEMS 75 & 107-110) AT EACH LOCKSTILE, LOCKING INTO KEEPER (ITEM 103) AT FRAME JAMB OR ASTRAGAL.

NOTE:
1. MAXIMUM NOMINAL PANEL WIDTH FOR ALL PANEL CONFIGURATIONS EQUALS 48"

Approved as complying with the Florida Building Code
Date MAR 24, 2010
NOA# 09-082311
Miami Dade Product Control Division
By [signature]

ROBERT JAMES AMORUSO
LICENSE
No 49752
STATE OF FLORIDA
PROFESSIONAL ENGINEER
2/24/10

Robert J. Amoruso, P.E.
PE #49752

| Revsd By: | Date: | Revisions: | |
|---|---|---|---|
| Revsd By: SMC | Date: 02/23/10 | Revisions: B | PER MIAMI DADE COMMENTS |
| Revsd By: SMC | Date: 11/16/09 | Revisions: A | PER MIAMI DADE COMMENTS |
| Drawn By: SMC | Date: 08/05/09 | Checked By: RJA | Date: |

1070 TECHNOLOGY DRIVE
NOKOMIS, FL 34275
P.O. BOX 1529
NOKOMIS, FL 34274

PGT®

Description: PANEL TYPES / EXAMPLE ELEVATIONS
Title: SERIES 770 H.P. ALUMINUM SGD - SMI

| Series/Model: | Scale: | Sheet: | Drawing No. | Rev: |
|---|---|---|---|---|
| SGD770 H.P. | NTS | 7 of 10 | PGT0005 | B |

PREPARED BY: PTC, LLC 1535 N. COGSWELL ST., STE. C25, ROCKLEDGE, FL 32955, PH: 321-690-1788, FAX 321-690-1789

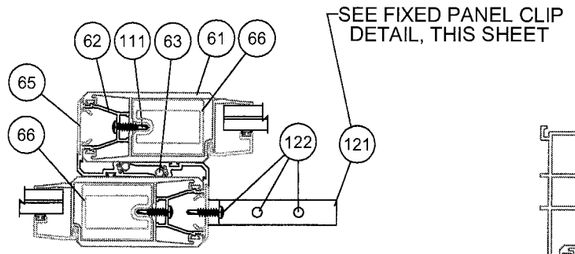


ALL REINFORCED INTERLOCK

DETAIL 'J'

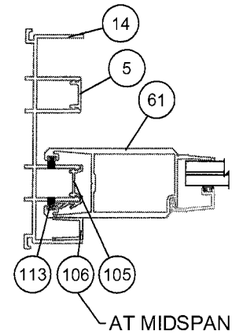


DETAIL 'K' (FIXED PANEL)

INTERIOR
(ALL HORIZ. SECTIONS)
EXTERIOR

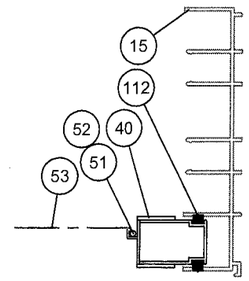


DETAIL 'P' SCREEN AT JAMB

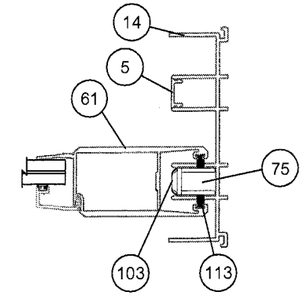


DETAIL 'L'

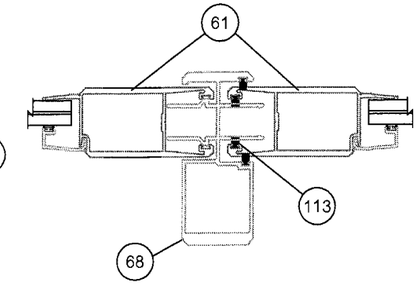


ASTRAGAL

DETAIL 'M'

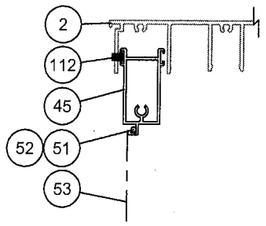


DETAIL 'N' SCREEN AT HEAD

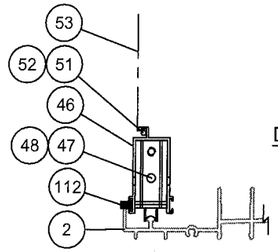


DETAIL 'O' SCREEN AT SILL

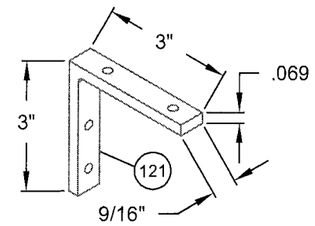


FIXED PANEL CLIP REQ'D AT TOP (HEAD) & BOTTOM (SILL) OF FIXED "O" PANELS. SEE SECTION "J" THIS SHT. & FIXED PANEL CLIP DETAIL ON SHT. 7

## SILL RISERS OPTIONS

(SEE D.P. LIMIT TABLE 1A, SHEET 4)

EXTERIOR INTERIOR
(ALL VERT. SECTIONS)

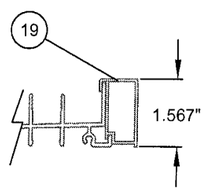


FLUSH BOX SILL RISER

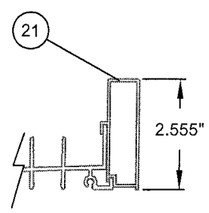


LOW BOX SILL RISER

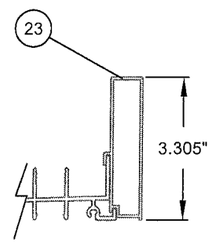


MEDIUM BOX SILL RISER

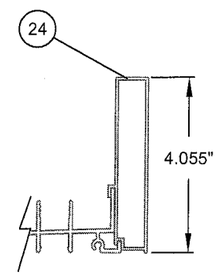


HIGH BOX SILL RISER

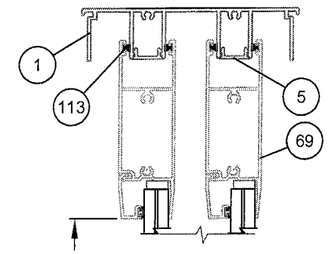


97 7/8" MAX. DLO TYP.

DETAIL 'I'

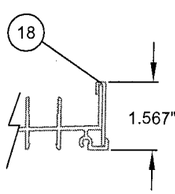


FLUSH FLAT SILL RISER

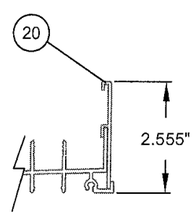


LOW FLAT SILL RISER

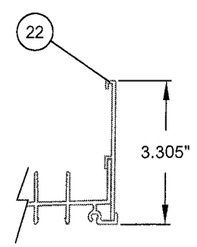


MEDIUM FLAT SILL RISER

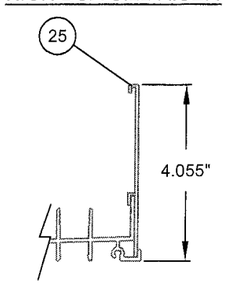


HIGH FLAT SILL RISER

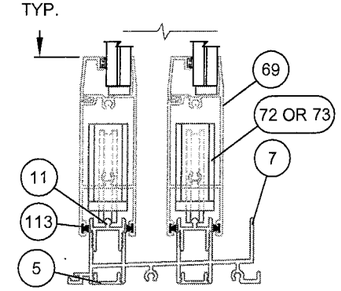


DETAIL 'H'

Approved as complying with the Florida Building Code
Date MAR 24, 2010
NOA# 09-0823.11
Miami Dade Product Control Division
By Shaq I. Chanda

ROBERT JAMES AMORUSO
LICENSE
No 49752
STATE OF FLORIDA
PROFESSIONAL ENGINEER

Robert J. Amoruso, P.E.
PE #49752

| Revsd By: | Date: | Revisions: | |
|---|---|---|---|
| Revsd By: SMC | Date: 02/23/10 | Revisions: B | PER MIAMI DADE COMMENTS |
| Revsd By: SMC | Date: 11/16/09 | Revisions: A | PER MIAMI DADE COMMENTS |
| Drawn By: SMC | Date: 08/05/09 | Checked By: | Date: |

1070 TECHNOLOGY DRIVE
NOKOMIS, FL 34275

P.O. BOX 1529
NOKOMIS, FL 34274

Description: VERTICAL & HORIZONTAL SECTION DETAILS

Title: SERIES 770 H.P. ALUMINUM SGD - SMI

| Series/Model: | Scale: | Sheet: | Drawing No. | Rev: |
|---|---|---|---|---|
| SGD770 H.P. | NTS | 8 of 10 | PGT0005 | B |

PREPARED BY: PTC, LLC 1535 N. COGSWELL ST., STE. C25, ROCKLEDGE, FL 32955, PH: 321-690-1788, FAX 321-690-1789

| ITEM | PGT Dwg. # | PGT. # | Description |
|---|---|---|---|
| 1 | 17306 | 617306 | 2-TRACK HEAD |
| 2 | 17303 | 617303 | 2-TRACK HEAD WITH SCREEN RAIL |
| 5 | 17314 | 617314 | FRAME SCREW COVER |
| 6 | 17317 | 617317 | FRAME HEAD/JAMB ADD-ON |
| 7 | 17304 | 617304 | 2-TRACK SILL |
| 8 | 17301 | 617301 | 2-TRACK SILL WITH SCREEN RAIL |
| 14 | 17305 | 617305 | 2-TRACK JAMB |
| 15 | 17302 | 617302 | 2-TRACK JAMB WITH SCREEN RAIL |
| 18 | 17322 | 617322 | SILL RISER - 0 |
| 19 | 17319 | 617319 | SILL RISER - 0 HOLLOW |
| 20 | 17321 | 617321 | SILL RISER - LOW FLAT |
| 21 | 17318 | 617318 | SILL RISER - LOW HOLLOW |
| 22 | 17355 | 617355 | SILL RISER - MED FLAT |
| 23 | 17354 | 617354 | SILL RISER - MED HOLLOW |
| 24 | 17320 | 617320 | SILL RISER - HIGH HOLLOW |
| 25 | 17323 | 617323 | SILL RISER - HIGH FLAT |

| | | | |
|---|---|---|---|
| 40 | 4319 | 612258 | SCREEN SIDE RAIL - LOCKSTILE |
| 41 | | 7LOCKWGSK | SCREEN LOCKSET |
| 42 | | 41818 | SCREEN KEEPER SPACER SET |
| 43 | 8152 | 68152 | SCREEN INTERLOCK ADAPTER |
| 44 | 4428 | 64428 | SCREEN DOUBLE INTERLOCK |
| 45 | 4317 | 612256 | SCREEN TOP RAIL |
| 46 | 4318 | 612257 | SCREEN BOTTOM RAIL |
| 47 | 668 | 7SRAZ | STANDARD ROLLER |
| 48 | 668 | 7SRAX | STANDARD ROLLER - ST. STL. |
| 49 | 4344 | 64344 | SCREEN ASTRAGAL |
| 50 | 17349 | 617349 | OXO SCREEN ASTRAGAL ADAPTER |
| 51 | 1692 | 61692 | SCREEN SPLINE - .165 |
| 52 | 1694 | 61694 | SCREEN SPLINE - .150 |
| 53 | | 61816C20 | SCREEN CLOTH |
| 54 | 1725 | | 1/2" x 4" x 1/16" SITTING BLOCK |
| 55 | 1726 | | 1" X 4" X 1/16" SITTING BLOCK |

| | | | |
|---|---|---|---|
| 206 | | GLASS | 7/16 LAMI T-T PVB |
| 207 | | GLASS | 9/16 LAMI T-T PVB |
| 214 | | GLASS | LAMI IG 3/16T - 7/16LAMI T-T PVB |
| 215 | | GLASS | LAMI IG 1/4T - 7/16LAMI T-T PVB |

| ITEM | PGT Dwg. # | PGT. # | Description |
|---|---|---|---|
| 61 | 17326 | 617326 | PANEL STILE (HEAVY DUTY) |
| 62 | 17327 | 617327 | INTERLOCK ADAPTOR |
| 63 | 1225 | 6TP248 | VINYL BULB WSTP. - THIN (INSIDE INTERLOCK) |
| 64 | 1729 | 71729 | SILL END WEATHERSTRIP PAD |
| 65 | 17328 | 617328 | INTERLOCK SCREW COVER |
| 66 | 17346 | 617346 | INTERLOCK ALUM REINF. |
| 68 | 17339 | 617339 | HEAVY DUTY ASTRAGAL |
| 69 | 17324 | 617324 | TOP & BOTTOM RAIL |
| 70 | 17350 | 417350 | WEATHERSTRIP EXTENSION (INJECTION MOLDED) |
| 71 | 1695 | 71695 | 1 1/2" X 1" X 3/4" HIGH FIN SEAL DUST PLUGS |
| 72 | 8153 | 78153X | TANDEM ST. STL. ROLLER ASSY. |
| 73 | 8153 | 78153N | TANDEM NYLON ROLLER ASSY. |
| 74 | | SILICONE | DOW 899 OR 995 |
| 75 | 8185 | 78185X | GEMINI MORTICE LOCK W/LONG TRIM PLATE (3-PLY) |
| 76 | | 71032X1FPFX | #10-32 X 1" FL. SS SCREW W/ TYPE "F" TIP |
| 77 | | 7103239 | 10-32 STEEL ZINC U-NUT |
| 79 | 17357 | 617357 | 1" IG BEAD HORIZONTAL |
| 80 | 17359 | 617359 | 7/16 BEAD HORIZONTAL |
| 81 | 17360 | 617360 | 9/16 BEAD HORIZONTAL |
| 82 | 1224 | 6TP247K | VINYL BULB WEATHERSTRIP |
| 83 | | IGTAPE | 1/2"X 1/16" SINGLE SIDE ADHESIVE TAPE FOR IG BEAD |

| | | | |
|---|---|---|---|
| 100 | 8052 | 48052 | ROLLER ADJ. HOLE PLUG |
| 101 | | 72087 | JAMB BUMPER |
| 102 | 1696 | 71696 | DUST PLUG |
| 103 | 8186 | 78186X | 1" KEEPER |
| 104 | 653 | 7SDKEEP | SCREEN LOCK KEEPER |
| 105 | 17344 | 617344 | FIXED PANEL CLIP - 6" LONG |
| 106 | 17352 | 617352 | EXTERIOR FIXED PANEL RETAINER |
| 107 | 1739 | 71739 | HANDLE KIT - INTERIOR RAISED WITH THUMB TURN |
| 108 | 1740 | 71740 | HANDLE KIT - RAISED EXTERIOR HANDLE |
| 109 | 1731 | 78162SN | HANDLE KIT - RECESSED INTERIOR WITH THUMB TURN |
| 110 | 1732 | 78178 | HANDLE KIT - RECESSED EXTERIOR PULL |
| 111 | | 710X34PPSDAX | #10 X 3/4" PH. PN. TEK - S.S. |
| 112 | 1235 | 67S16 | WSTP, .270 X .170 - FIN SEAL |
| 113 | 1712 | 64066 | .187 X .230 FINSEAL |
| 114 | | 710X115PPX | #10X 1 1/2" |
| 115 | | 710XPPT | #10X 1" |
| 116 | | 720X1X | #14-20 X 1" ST. STL. |
| 117 | | 720X112X | #14-20 X 1.5" ST. STL. |
| 121 | 17353 | | "O" PANEL BRACKET |
| 122 | | | #10 x 1-1/4" TEK SCREW |

NOTE: ALL ALUMINUM = 6063-T6

Approved as complying with the Florida Building Code
Date MAR 24 2010
NOA# 09-0823.11
Miami Dade Product Control Division
By Craig L. Chandler

ROBERT JAMES AMORUSO
LICENSE No. 49752
STATE OF FLORIDA
PROFESSIONAL ENGINEER

Robert J. Amoruso, P.E.
PE #49752

| Revsd By: | Date: | Revisions: | |
|---|---|---|---|
| Revsd By: SMC | Date: 02/23/10 | Revisions: B | PER MIAMI DADE COMMENTS |
| Revsd By: SMC | Date: 11/16/09 | Revisions: A | PER MIAMI DADE COMMENTS |
| Drawn By: SMC | Date: 08/05/09 | Checked By: RJA | Date: |

1070 TECHNOLOGY DRIVE
NOKOMIS, FL 34275

P.O. BOX 1529
NOKOMIS, FL 34274

Description: PARTS LIST

Title: SERIES 770 H.P. ALUMINUM SGD - SMI

| Series/Model: | Scale: | Sheet: | Drawing No. | Rev: |
|---|---|---|---|---|
| SGD770 H.P. | NTS | 9 of 10 | PGT0005 | B |

PREPARED BY: PTC, LLC 1535 N. COGSWELL ST., STE. C25, ROCKLEDGE, FL 32955, PH: 321-690-1788, FAX 321-690-1789

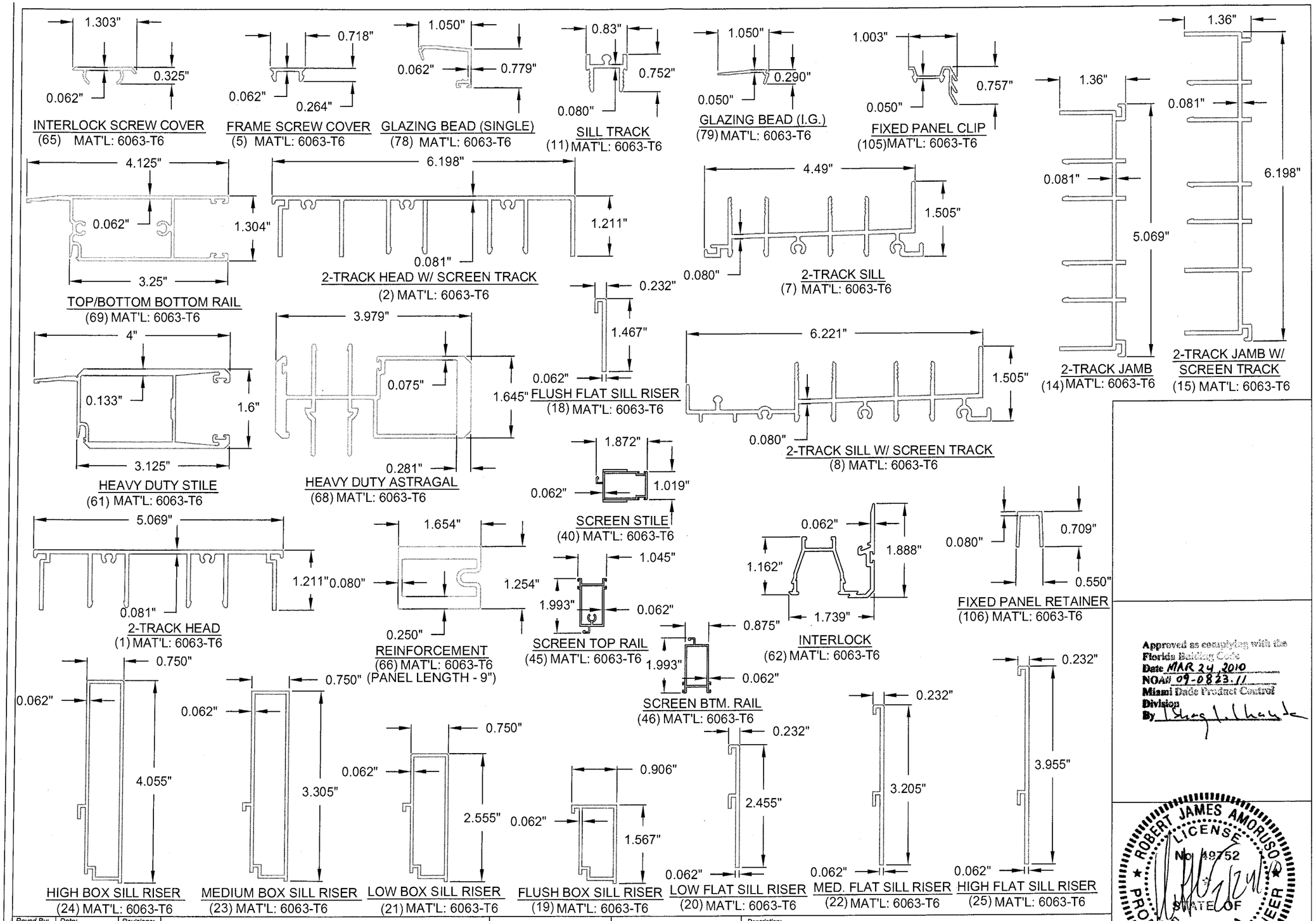


Approved as complying with the Florida Building Code
Date MAR 24 2010
NOA# 09-0823.11
Miami Dade Product Control Division
By

ROBERT JAMES AMORUSO
LICENSE
No. 49752
STATE OF FLORIDA
PROFESSIONAL ENGINEER

Robert J. Amoruso, P.E.
PE #49752

| Revsd By: | Date: | Revisions: | |
|---|---|---|---|
| SMC | 02/23/10 | B | PER MIAMI DADE COMMENTS |
| SMC | 11/16/09 | A | PER MIAMI DADE COMMENTS |
| Drawn By: SMC | Date: 08/05/09 | Checked By: RJA | Date: |

1070 TECHNOLOGY DRIVE
NOKOMIS, FL 34275

P.O. BOX 1529
NOKOMIS, FL 34274

PGT®

Description: EXTRUSIONS

Title: SERIES 770 H.P. ALUMINUM SGD - SMI

| Series/Model: | Scale: | Sheet: | Drawing No. | Rev: |
|---|---|---|---|---|
| SGD770 H.P. | NTS | 10 of 10 | PGT0005 | B |

PREPARED BY: PTC, LLC 1535 N. COGSWELL ST., STE. C25, ROCKLEDGE, FL 32955, PH: 321-690-1788, FAX 321-690-1789