MIAMI-DADE COUNTY
BUILDING CODE COMPLIANCE OFFICE (BCCO)
PRODUCT CONTROL DIVISION

MIAMI-DADE COUNTY, FLORIDA
METRO-DADE FLAGLER BUILDING

140 WEST FLAGLER STREET, SUITE 1603
MIAMI, FLORIDA 33130-1563
(305) 375-2901 FAX (305) 375-2908
www.miamidade.gov

NOTICE OF ACCEPTANCE (NOA)

Structall Building Systems, Inc.
350 Burbank Road
Oldsmar, Florida 34677-4906

SCOPE:
This NOA is being issued under the applicable rules and regulations governing the use of construction materials. The documentation submitted has been reviewed by Miami-Dade County Product Control Division and accepted by the Board of Rules and Appeals (BORA) to be used in Miami Dade County and other areas where allowed by the Authority Having Jurisdiction (AHJ).

This NOA shall not be valid after the expiration date stated below. The Miami-Dade County Product Control Division (In Miami Dade County) and/or the AHJ (in areas other than Miami Dade County) reserve the right to have this product or material tested for quality assurance purposes. If this product or material fails to perform in the accepted manner, the manufacturer will incur the expense of such testing and the AHJ may immediately revoke, modify, or suspend the use of such product or material within their jurisdiction. BORA reserves the right to revoke this acceptance, if it is determined by Miami-Dade County Product Control Division that this product or material fails to meet the requirements of the applicable building code.

This product is approved as described herein, and has been designed to comply with the High Velocity Hurricane Zone of the Florida Building Code.

DESCRIPTION: 3" Snap-N-Lock Composite Roof Panel for Open Structures

APPROVAL DOCUMENT: Drawing titled " Snap-N-Lock Roof Panels for use as an open cover ", prepared by A.S. Engineering Services, P.C., dated June 29, 2009, last revision #2 dated December 09, 2009, sheets 1 and 2 of 2, signed and sealed by Alexis Spyrou, P.E., bearing the Miami-Dade County Product Control Approval stamp with the Notice of Acceptance number and the approval date by the Miami-Dade County Product Control Division.

MISSILE IMPACT RATING: None

LABELING: Each panel shall bear a permanent label with the manufacturer's name or logo, city, state and the following statement: " Miami-Dade County Product Control Approved ", unless otherwise noted herein

RENEWAL of this NOA shall be considered after a renewal application has been filed and there has been no change in the applicable building code negatively affecting the performance of this product.

TERMINATION of this NOA will occur after the expiration date or if there has been a revision or change in the materials, use, and/or manufacture of the product or process. Misuse of this NOA as an endorsement of any product, for sales, advertising or any other purposes shall automatically terminate this NOA. Failure to comply with any section of this NOA shall be cause for termination and removal of NOA.

ADVERTISEMENT: The NOA number preceded by the words Miami-Dade County, Florida, and followed by the expiration date may be displayed in advertising literature. If any portion of the NOA is displayed, then it shall be done in its entirety.

INSPECTION: A copy of this entire NOA shall be provided to the user by the manufacturer or its distributors and shall be available for inspection at the job site at the request of the Building Official.

This NOA consists of this page 1, evidence submitted page E-1 as well as approval document mentioned above. The submitted documentation was reviewed by **Helmy A. Makar, P.E., M.S.**

MIAMI-DADE COUNTY APPROVED

Helmy A. Makar
01/13/2010

NOA No. 09-0901.11
Expiration Date: 01/13/2015
Approval Date: 01/13/2010

Structall Building Systems, Inc.

NOTICE OF ACCEPTANCE: EVIDENCE SUBMITTED

A. DRAWINGS

1. *Drawing titled " Snap-N-Lock Roof Panels for use as an open cover ", prepared by A.S. Engineering Services, P.C., dated June 29, 2009, last revision #2 dated December 09, 2009, sheets 1 and 2 of 2, signed and sealed by Alexis Spyrou, P.E.*

B. TESTS

1. *Test Report # TT 508010-202, prepared by Terrapintesting, per TAS 202, dated May, 05, 2009, signed and sealed by Terence Cavanagh, P.E.*

C. CALCULATIONS

1. *Calculation titled 3" EPS Roof Panels, prepared by A.S. Engineering Services, P.C., dated August 19, 2009, 10 sheets, signed and sealed by Alexis Spyrou, P.E.*

D. QUALITY ASSURANCE

1. *By Miami-Dade County Building Code Compliance Office.*

E. MATERIAL CERTIFICATION:

1. *Die drawings by Extruders numbers D-12280 & D-12289.*

Helmy A. Makar, P.E., M.S.
Senior Product Control Examiner
NOA No. 09-0901.11
Expiration Date: 01/13/2015
Approval Date: 01/13/2010

SNAP-N-LOCK ROOF PANELS

FOR USE AS AN OPEN COVER

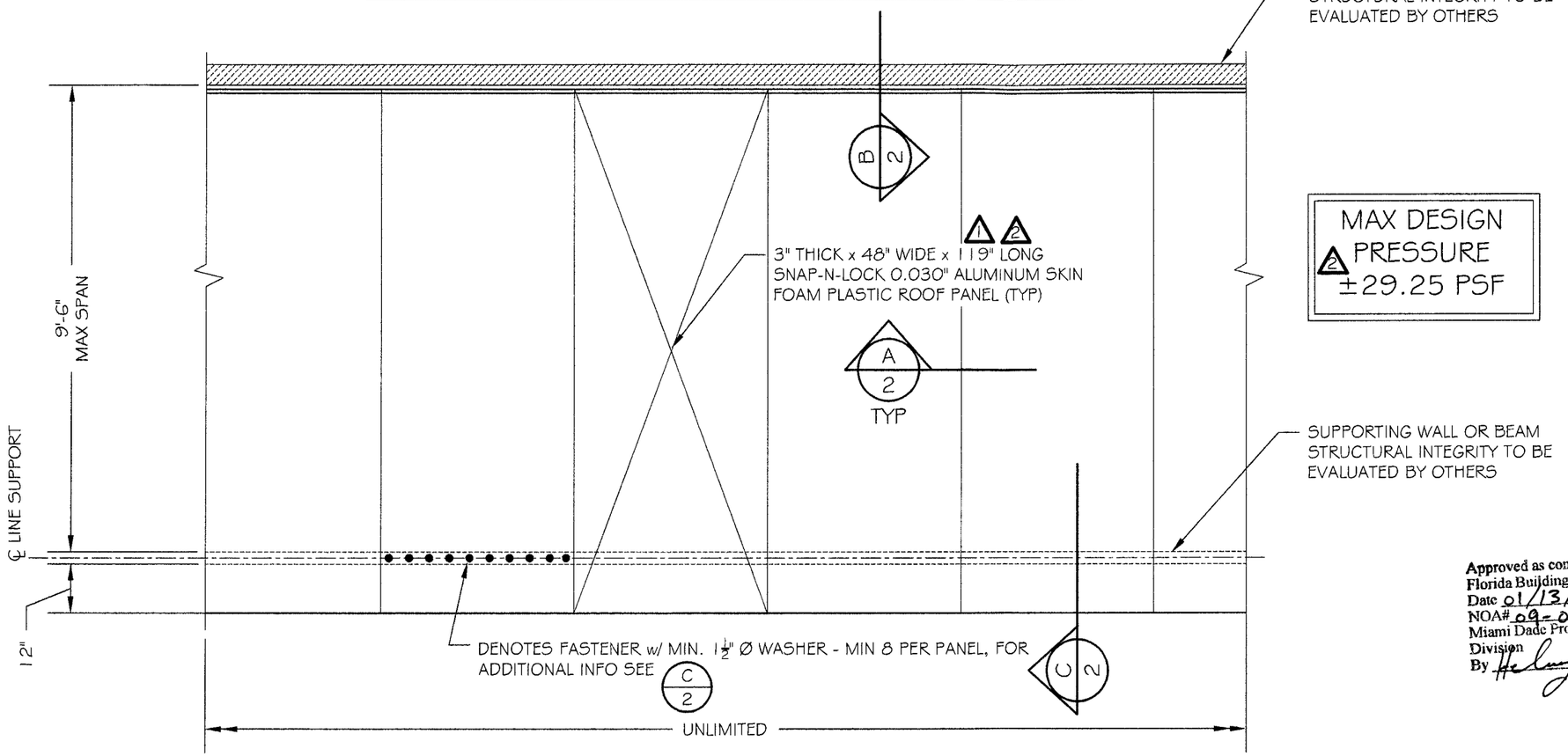

MAX DESIGN PRESSURE 2 ±29.25 PSF

A 1 ROOF FRAMING PLAN

SCALE: NTS

Approved as complying with the Florida Building Code
Date 01/13/2010
NOA# 09-0901.11
Miami Dade Product Control Division
By

GENERAL NOTES (CONTINUED ON SHEET 2)

A. COMPLIANCE

1. THE SYSTEM DESCRIBED HEREIN HAS BEEN DESIGNED AND TESTED IN ACCORDANCE WITH THE 2007 FLORIDA BUILDING CODE AND THE 2009 AMMENDEMENTS TO THE FLORIDA BUILDING CODE, FOR USE WITHIN THE HIGH VELOCITY HURRICANE ZONE, PER TAS 202 STANDARDS.
2. CONTRACTOR TO INVESTIGATE AND CONFORM TO ALL LOCAL BUILDING CODE AMENDMENTS WHICH MAY APPLY.

B. DESIGN PARAMETERS

1. NO 33⅓% INCREASE IN ALLOWABLE STRESS HAS BEEN USED IN THE DESIGN OF THIS SYSTEM.
2. POSITIVE AND NEGATIVE DESIGN PRESSURES CALCULATED FOR USE WITH THIS SYSTEM SHALL BE DETERMINED BY A DESIGN PROFESSIONAL ON A JOB SPECIFIC BASIS IN ACCORDANCE TO THE GOVERNING CODE.
3. THE SYSTEM DETAILED HEREIN IS GENERIC AND DOES NOT PROVIDE INFORMATION FOR A SPECIFIC SITE. FOR SITE CONDITIONS DIFFERENT FROM THE CONDITIONS DETAILED IN THESE PLANS, A LICENSED ENGINEER OR REGISTERED ARCHITECT SHALL PREPARE SITE SPECIFIC DOCUMENTS FOR USE IN CONJUNCTION WITH THIS DOCUMENT.
4. THE CONTRACTOR SHALL CAREFULLY CONSIDER POSSIBLE IMPOSING LOADS ON THE ROOF PANES, INLCUDING BUT NOT LIMITED TO ANY CONCENTRATED LOADS WHCIH MAY JUSTIFY GREATER DESIGN CRITERIA. THIS ADDTIONAL ROOF LOAD CRITERIA SHALL BE PROPERLY ANALYZED AND EVALUATED BY A PROFESSIONAL ENGINEER.
5. PERMIT HOLDER SHALL VERIFY THE STRUCTURAL ADEQUACY OF THE EXISTING STRUCTURE TO WITHSTAND THE LOADS SUPERIMPOSED BY THE ROOF PANEL SYSTEM.

C. ROOF PANELS

1. EPS CORE COMPOSITE PANELS SHALL BE CONSTRUCTED USING TYPE 3105-H254 ALUMINUM INTERIOR AND EXTERIOR FACINGS, 1.0 PCF EPS. THE EPS FOAM SHALL BE ADHERED TO THE ALUMINum FACING WITH MORAD 640 BY ROHM AND HAAS. ALL FABRICATION SHALL BE IN ACCORDANCE TO APPROVED METHODS BY STRUCTALL BUIDLING SYSTEMS AT THEIR MANUFACTURING FACILITY LOCATED IN OLDSMAR, FLORIDA.

CLIENT:

STRUCTALL BUILDING SYSTEMS

350 BURBANK ROAD
OLDSMAR, FLORIDA
34677

NATIONWIDE 1-800-969-3706
LOCAL 813-855-2627
FAX 813-855-8126

A.S. ENGINEERING SERVICES, P.C.
WHERE INNOVATION MEETS PRACTICALITY
112 WILSON DRIVE
PORT JEFFERSON, NY 11777
CELL: (631) 560-0259

PROJECT NAME:

3" EPS FOAM CORE ALUMINUM SKIN PANELS

MIAMI-DADE NOTICE OF ACCEPTANCE

SEAL:

12-9-09

DRAWING TITLE:

GENERAL NOTES & PLAN

REVISIONS	
1	9-1-09 REVISED ALUM SKIN THICKNESS
2	12-9-09

DRAWN BY: AS

REVIEWED BY: AS

SCALE: SEE PLAN

DATE: 6-29-09

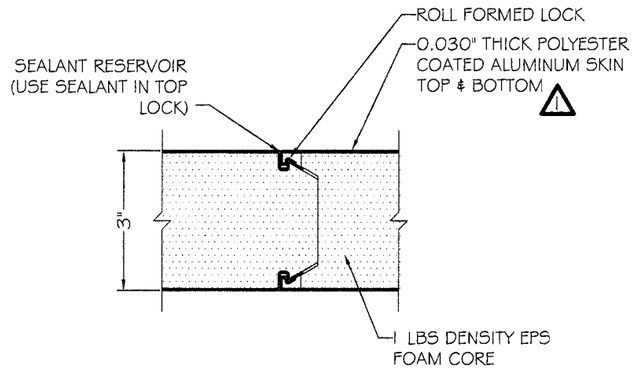

A/2 TYP ROOF PANEL JOINT DETAIL
NOT TO SCALE

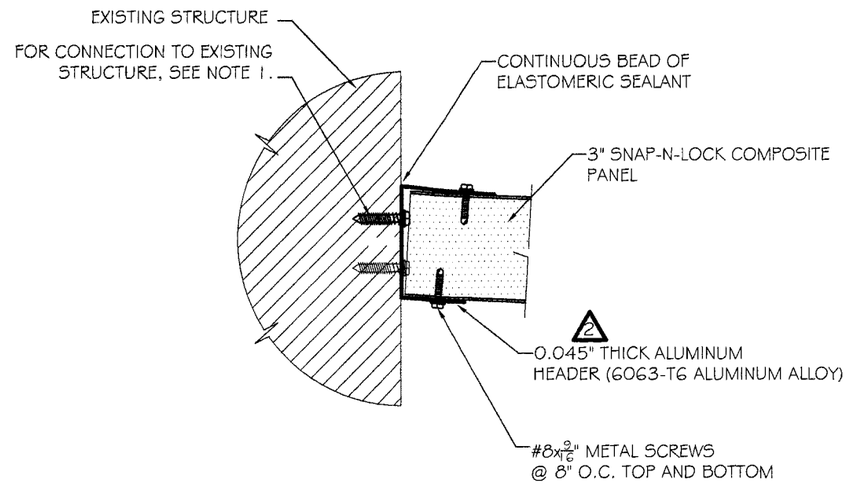

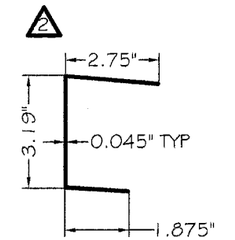

HEADER CROSS SECTION

B/2 TYP ROOF PANEL TO EXIST STRUCTURE CONN DETAIL
NOT TO SCALE

1

NOTE:

1. CONNECTION TO WOOD: $\frac{1}{4}$"Ø x 2" LAG BOLT @ 6" O.C. STAGGERED (MIN. G = 0.55) 2

CONNECTION TO MASONRY: $\frac{1}{4}$"Ø x $1\frac{1}{2}$" TAPCON ANCHOR (OR APPROVED EQUAL @ 6" O.C. STAGGERED TAPCON ANCHOR SHALL BE INSTALLED IN COMPLIANCE WITH ICC-ES ESR-1671

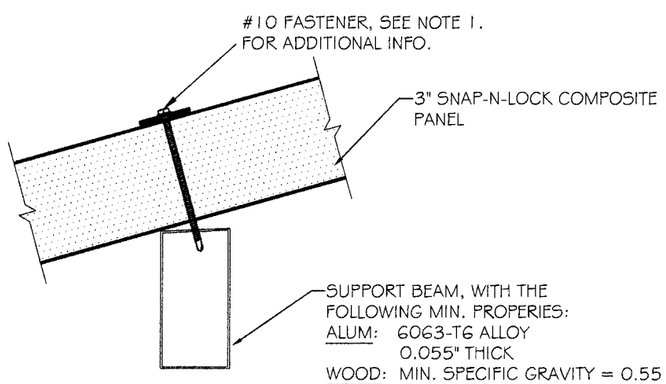

C/2 TYP ROOF PANEL TO SUPPORT BEAM CONN DETAIL
NOT TO SCALE

1

NOTE:

1. CONNECTION TO WOOD: #10x6" WOOD SCREW w/ $\frac{1}{4}$" I.D.x$1\frac{1}{2}$" O.D. S.S. NEOPRENE WASHER @ 5" O.C. & 3" FROM EACH END OF PANEL

CONNECTION TO ALUM: #10x4" S.M.S. w/ $\frac{1}{4}$" I.D.x$1\frac{1}{2}$" O.D. S.S. NEOPRENE WASHER @ 5" O.C. & 3" FROM EACH END OF PANEL

Approved as complying with the Florida Building Code
Date 01/13/2010
NOA# 09-0901.11
Miami Dade Product Control Division
By Helay A. Melo

GENERAL NOTES (CONT. FROM SHEET 1)

D. MISC.

1. LAG BOLTS AND SCREWS SHALL BE PROVIDED WITH LEAD HOLES HAVING A DIAMETER NOT GREATER THAN 70 PERCENT OF THE THREAD DIAMETER OF THE BOLT OR SCREW. ALL LAG BOLTS AND SCREWS SHALL BE INSERTED IN LEAD HOLES BY TURNING AND UNDER NO CIRCUMSTANCES BY DRIVING WITH A HAMMER.
2. ALL FABRICATED STEEL ASSEMBLIES EXPOSED TO WEATHER AND ALL STEEL FASTENERS, INCLUDING BUT NOT LIMITED TO NAILS, ANCHOR BOLTS, CONNECTION BOLTS, NUTS, WASHERS, LAG BOLTS OR SCREWS SHALL BE GALVANIZED IN ACCORDANCE WITH THE ASTM STANDARD FOR THAT ACCESSORY, ASTM A213, A153 OR OTHER.
3. IN ALL INSTANCES WHERE ALUMINUM COMES INTO CONTACT WITH STEEL, PROVIDE DIELECTRIC SEPARATION.
4. THE ENGINEERS SEAL ON THESE DOCUMENTS VALIDATES THE MAXIMUM SPAN, DESIGN PRESSURE AND THE DESIGN OF ANCHORS ONLY AS SHOWN.
5. UNLESS OTHERWISE NOTED WITHIN THESE DOCUMENTS, NO ADDITIONAL CERTIFICATIONS ARE INTENDED
6. ALTERATIONS, ADDITIONS OR ANY MARKINGS TO THESE DOCUMENTS ARE NOT PERMITTED AND WILL
INVALIDATE THE ENGINEERS CERTIFICATION.

CLIENT:
STRUCTALL BUILDING SYSTEMS
360 BURBANK ROAD
OLDSMAR, FLORIDA
34677
NATIONWIDE 1-800-969-3706
LOCAL 813-855-2527
FAX 813-855-8128

A.S. ENGINEERING SERVICES, P.C.
WHERE INNOVATION MEETS PRACTICALITY
112 WILSON DRIVE
PORT JEFFERSON, NY 11777
CELL: (631) 560-0259

PROJECT NAME:
3" EPS FOAM CORE
ALUMINUM SKIN PANELS
MIAMI-DADE NOTICE OF ACCEPTANCE

SEAL:
12-9-09

DRAWING TITLE:
DETAILS

REVISIONS	
1	9-1-09
2	12-9-09

DRAWN BY: AS
REVIEWED BY: AS
SCALE: SEE PLAN
DATE: 6-29-09