MIAMI-DADE COUNTY
BUILDING CODE COMPLIANCE OFFICE (BCCO)
PRODUCT CONTROL DIVISION

MIAMI-DADE COUNTY, FLORIDA
METRO-DADE FLAGLER BUILDING
140 WEST FLAGLER STREET, SUITE 1603
MIAMI, FLORIDA 33130-1563
(305) 375-2901 FAX (305) 372-6339
www.miamidade.gov/buildingcode

NOTICE OF ACCEPTANCE (NOA)

United Enertech
3005 South Hickory Street
Chattanooga, TN 37407

SCOPE: This NOA is being issued under the applicable rules and regulations governing the use of construction materials. The documentation submitted has been reviewed by Miami-Dade County Product Control Division and accepted by the Board of Rules and Appeals (BORA) to be used in Miami Dade County and other areas where allowed by the Authority Having Jurisdiction (AHJ).

This NOA shall not be valid after the expiration date stated below. The Miami-Dade County Product Control Division (In Miami Dade County) and/or the AHJ (in areas other than Miami Dade County) reserve the right to have this product or material tested for quality assurance purposes. If this product or material fails to perform in the accepted manner, the manufacturer will incur the expense of such testing and the AHJ may immediately revoke, modify, or suspend the use of such product or material within their jurisdiction. BORA reserves the right to revoke this acceptance, if it is determined by Miami-Dade County Product Control Division that this product or material fails to meet the requirements of the applicable building code.

This product is approved as described herein, and has been designed to comply with the Florida Building Code, including the High Velocity Hurricane Zone.

DESCRIPTION: Model SED-5.1 Aluminum Louver with or without CD-151 Damper

APPROVAL DOCUMENT: Drawing No. **09-167**, titled "SED-5.1 Louver System with or without CD-151 Damper Assembly", sheets 1 through 16 (including sheet 4A) of 16, dated 09/08/09, prepared by Tilteco, Inc., signed and sealed by Walter A. Tillit Jr., P.E., bearing the Miami-Dade County Product Control revision stamp with the Notice of Acceptance number and expiration date by the Miami-Dade County Product Control Division.

MISSILE IMPACT RATING: Large and Small Missile Impact Resistant.

LABELING: Each unit shall bear a permanent label with the manufacturer's name or logo, city, state and following statement: "Miami-Dade County Product Control Approved", unless otherwise noted herein.

RENEWAL of this NOA shall be considered after a renewal application has been filed and there has been no change in the applicable building code negatively affecting the performance of this product.

TERMINATION of this NOA will occur after the expiration date or if there has been a revision or change in the materials, use, and/or manufacture of the product or process. Misuse of this NOA as an endorsement of any product, for sales, advertising or any other purposes shall automatically terminate this NOA. Failure to comply with any section of this NOA shall be cause for termination and removal of NOA.

ADVERTISEMENT: The NOA number preceded by the words Miami-Dade County, Florida, and followed by the expiration date may be displayed in advertising literature. If any portion of the NOA is displayed, then it shall be done in its entirety.

INSPECTION: A copy of this entire NOA shall be provided to the user by the manufacturer or its distributors and shall be available for inspection at the job site at the request of the Building Official.

This NOA **revises NOA # 08-1003.07** and consists of this page 1 and evidence page E-1, as well as approval document mentioned above.

The submitted documentation was reviewed by **Carlos M. Utrera, P.E.**

MIAMI-DADE COUNTY APPROVED

10/19/09

NOTICE OF ACCEPTANCE: EVIDENCE SUBMITTED

A. DRAWINGS

1. Drawing No. **09-167**, titled "SED-5.1 Louver System with or without CD-151 Damper Assembly", sheets 1 through 16 (including sheet 4A) of 16, dated 09/08/09, prepared by Tilteco, Inc., signed and sealed by Walter A. Tillit Jr., P.E.

B. TESTS

1. Test reports on 1) Uniform Static Air Pressure Test, Loading per FBC TAS 202-94
   2) Large Missile Impact Test per FBC, TAS 201-94
   3) Cyclic Wind Pressure Loading per FBC, TAS 203-94

   Along with marked-up drawings and installation diagram of Model SED-5.1 Louver System, prepared by American Test Lab of South Florida, Test Report No. **0514.01-08**, dated 09/15/08, signed and sealed by William R. Mehner, P.E., and Henry Hattem, P.E.
2. Test Report on Wind and Wind Driven Rain Resistance Test per TAS 100(A)-95 of a Model CD-151 Parallel Blade Damper, prepared by PRI Asphalt Technologies, Report No. **UEC-001-02-01**, dated 02/08/05, signed and sealed by Charles L. Thomas, P.E.
   "Submitted under NOA # 08-1003.07"

C. CALCULATIONS

1. Anchor, stress and deflection calculations, prepared by Tilteco Inc, dated 09/09/09, sheets 1 through 13 of 13, complying with F.B.C. 2007, signed and sealed by Walter A. Tillit Jr., P.E.
2. Anchor, stress and deflection calculations, prepared by Tilteco Inc, dated 09/17/08, sheets 1 through 79 of 79, complying with F.B.C. 2004, signed and sealed by Walter A. Tillit Jr., P.E.
   "Submitted under NOA # 08-1003.07"

D. QUALITY ASSURANCE

1. Miami Dade Building Code Compliance Office (BCCO).

E. MATERIAL CERTIFICATIONS

1. None.

F. STATEMENTS

1. No financial interest letter issued by Tilteco, Inc., dated 09/10/09, signed and sealed by Walter A. Tillit Jr., P.E.
2. Code compliance letter issued by Tilteco, Inc. on 09/10/09, signed and sealed by Walter A. Tillit Jr., P.E.
3. Test compliance letter issued by American Test Lab of South Florida on 09/15/08, signed and sealed by William R. Mehner, P.E., and Henry Hattem, P.E.

10/19/09

Carlos M. Utrera, P.E.
Product Control Examiner
NOA No. 09-0922.11
Expiration Date: November 20, 2013
Approval Date: November 12, 2009

GENERAL NOTES:

1). **SED–5.1 LOUVER SYSTEM WITH OR WITHOUT CD–151 DAMPER** SHOWN ON THIS PRODUCT APPROVAL DOCUMENT (P.A.D.) HAS BEEN VERIFIED FOR COMPLIANCE IN ACCORDANCE WITH THE 2007 EDITION OF THE FLORIDA BUILDING CODE.
THIS **SED–5.1 LOUVER SYSTEM WITH OR WITHOUT CD–151 DAMPER** MAY BE INSTALLED AT HIGH VELOCITY HURRICANE ZONES (MIAMI–DADE / BROWARD COUNTIES).
DESIGN WIND LOADS SHALL BE DETERMINED AS PER SECTION 1620 OF THE ABOVE MENTIONED CODE.
IN ORDER TO VERIFY THAT COMPONENTS ON THIS (P.A.D.), AS TESTED, WERE NOT OVERSTRESSED, A 33% INCREASE IN ALLOWABLE STRESS FOR WIND LOADS WAS **NOT** USED IN THEIR ANALYSIS.
ALUMINUM SED–5.1 LOUVER SYSTEM WITH OR WITHOUT CD–151 DAMPER ADEQUACY FOR IMPACT AND FATIGUE RESISTANCE HAS BEEN VERIFIED IN ACCORDANCE WITH SECTION 1626 OF THE ABOVE MENTIONED CODE AS PER AMERICAN TESTING LAB REPORT # **0514.01–08**, AS PER TAS–201, TAS–202, TAS–203, & PRI TECHNOLOGIES LAB REPORT # UEC–001–02–01, PER TAS–100A (WIND DRIVEN RAIN)

DESIGN PRESSURE RATING:

F VARIES (psf): ALL SINGLE UNITS W/ SQUARE EDGES WITHOUT MULLIONS WITH OR WITHOUT DAMPER. (SEE SCHEDULE ON SHEET 4A), AND +150, –150 psf. FOR ALL SINGLE UNITS W/ CURVED EDGES W/O DAMPER.

F VARIES (psf): FOR ALL MULTIPLE UNITS WITH MULLIONS (12L) WITH OR WITHOUT DAMPER (SEE SCHEDULE ON SHEET 15).

2). ALL ALUMINUM EXTRUSIONS SHALL BE 6063–T5 ALLOY WITH MIN. SPECIFIC YIELD STRENGTHS AS SHOWN ON SHEET 2 AND 3.

3). ALL SCREWS TO BE STAINLESS STEEL 304 OR 316 SERIES WITH 50 ksi YIELD POINT AND 90 ksi TENSILE STRENGTH OR CORROSION RESISTANT CARBON STEEL AS PER DIN 50018.

4). ALL WELDING OF ALUMINUM FRAMING SHALL BE IN ACCORDANCE WITH THE AMERICAN WELDING SOCIETY A.W.S. D.1.2 2004 EDITION REGULATIONS. USE CERTIFIED WELDERS. USE ER–5356 ELECTRODES.

5). ANCHORS TO EXISTING STRUCTURE'S JAMBS SHALL BE AS FOLLOWS (SEE SHEETS 11 AND 16):

– ANCHORS SHALL BE INSTALLED FOLLOWING ALL OF THE RECOMMENDATIONS AND SPECIFICATIONS OF THE ANCHOR'S MANUFACTURER. E.D. IS BEYOND ANY WALL FINISH.

ANCHOR TYPE	MANUFACTURER	DIAMETER OR GAGE	MIN. EMBEDMENT			MIN. EDGE DISTANCE (E.D)	
			TO CONCRETE (f'c= 3192psi) MIN.	TO CONCRETE BLOCK (C–90 UNIT)	TO 1/8" MIN. STEEL Fy=33 ksi (MIN.)	CONCRETE OR CONCRETE BLOCK	STEEL
TAPCONS	ITW/ BUILDEX	1/4"	1–3/4"	1–1/4"	N/A	3"	N/A
TEK SCREWS	ITW/ BUILDEX	1/4"	N/A	N/A	3/4"	N/A	1"

– ANCHORS FOR MULLION CONNECTIONS SHALL BE AS INDICATED ON SHEETS 12 AND 13

6). **SED–5.1 LOUVER SYSTEM WITHOUT CD–151 DAMPER** SHALL ONLY BE INSTALLED IN A LOCATION WHERE THE ROOM BEHIND THE LOUVER IS DESIGNED TO DRAIN WATER PENETRATING INTO THE ROOM, AND THE ROOM WILL HOUSE WATER RESISTANT/WATER PROOF EQUIPMENT, COMPONENTS OR SUPPLIES.

7). **SED–5.1 LOUVER SYSTEM WITH CD–151 DAMPER** MAY BE INSTALLED IN LOCATIONS WHERE THE ROOM BEHIND THE LOUVER IS NOT DESIGNED TO DRAIN WATER PENETRATING INTO THE ROOM, OR THE ROOM WILL HOUSE NON–WATER RESISTANT EQUIPMENT, COMPONENTS, OR SUPPLIES. INSTALLATION ON LOUVER WITH DAMPER IS LIMITED TO 40 FT IN HEIGHT ACCORDING TO TABLE 3 OF TAS 100(A)–95.

8). **CD–151 DAMPER** IS AN OPERABLE ASSEMBLY, IT MAY BE OPERATED BY MEANS OF A HAND QUADRANTHANDLE MECHANISM (AS SHOWN ON SHEET 7) OR THROUGH AN ELECTRICAL OR PNEUMATIC ACTUATOR.
DAMPER'S OPERATIVE MECHANISM IS NOT PART OF THIS APPROVAL, BUT SHALL BE CERTIFIED BY AN INDEPENDENT TESTING AGENCY.

9). ALL ALUMINUM IN CONTACT WITH DISSIMILAR MATERIALS MUST BE PAINTED PER SECTIONS 2003.8.4.2, 2003.8.4.4, 2003.8.4.5 AND 2003.8.4.6 OF THE FLORIDA BUILDING CODE AS APPLICABLE.

10). IT SHALL BE RESPONSIBILITY OF THE CONTRACTOR TO VERIFY THE SOUNDNESS OF THE STRUCTURE WHERE LOUVER SYSTEM IS TO BE ATTACHED TO INSURE PROPER ANCHORAGE.

11).
(A) THIS PRODUCT APPROVAL DOCUMENT (P.A.D.) PREPARED BY THIS ENGINEER IS GENERIC AND DOES NOT PROVIDE INFORMATION FOR A SPECIFIC PROJECT; i.e. WHERE THE SITE CONDITIONS DEVIATE FROM THE PRODUCT APPROVAL DOCUMENT (P.A.D.)

(B) CONTRACTOR TO BE RESPONSIBLE FOR THE SELECTION, PURCHASE AND INSTALLATION INCLUDING LIFE SAFETY OF THIS PRODUCT, BASED ON THIS PRODUCT APPROVAL DOCUMENT (P.A.D.), PROVIDED HE/SHE DOES NOT DEVIATE FROM THE CONDITIONS DETAILED ON THIS DOCUMENT. CONSTRUCTION SAFETY AT SITE IS THE CONTRACTOR'S RESPONSIBILITY.

(C) THIS PRODUCT APPROVAL DOCUMENT (P.A.D.) WILL BE CONSIDERED INVALID IF MODIFIED.

(D) SITE SPECIFIC PROJECTS SHALL BE PREPARED BY A FLORIDA REGISTERED ENGINEER OR ARCHITECT WHICH WILL BECOME THE ENGINEER OF RECORD (E.O.R.) FOR THE PROJECT AND WHO WILL BE RESPONSIBLE FOR THE PROPER USE OF THE P.A.D.

(E) ORIGINAL PRODUCT APPROVAL DOCUMENT (P.A.D.) SHALL BEAR THE DATE AND ORIGINAL SEAL AND SIGNATURE OF THE PROFESSIONAL ENGINEER OR RECORD THAT PREPARED IT.

12). **SED–5.1 LOUVER SYSTEM WITH OR WITHOUT CD–151 DAMPER** MANUFACTURER'S LABEL SHALL BE PLACED ON A READILY VISIBLE LOCATION.
ONE LABEL SHALL BE PLACED FOR EVERY OPENING AND SHALL READ AS FOLLOWS:
UNITED ENERTECH, INC.
CHATTANOOGA, TN
MIAMI–DADE COUNTY PRODUCT CONTROL APPROVED.

PRODUCT REVISED
as complying with the Florida Building Code
Acceptance No 09-0922.11
Expiration Date 11/20/2013
By
Miami-Dade Product Control Division

F.B.C. (High Velocity Hurricane Zone)

9/10/09

© 2008 TILTECO INC.

TILTECO INC.
TILLIT TESTING & ENGINEERING COMPANY
6355 N.W. 36th. St., Ste. 305, VIRGINIA GARDENS, Fl. 33166
Phone: (305)871–1530 . Fax: (305)871–1531
e–mail: tilteco@aol.com
EB–0006719
WALTER A. TILLIT Jr. P.E.
FLORIDA Lic. # 44167

SED–5.1 LOUVER SYSTEM WITH OR WITHOUT CD–151 DAMPER ASSEMBLY

UNITED ENERTECH, INC.
3005 SOUTH HICKORY ST.
CHATTANOOGA, TN 37407
PHONE: (423)698–7715 FAX:(423)698–6629

REV. No	DESCRIPTION	DATE	REV. No	DESCRIPTION	DATE
1	OLD 08–004	09/08/09	3		
2			4		

DRAWN BY I.A.
09/08/09 DATE
09–167 DRAWING No
SHEET 1 OF 16

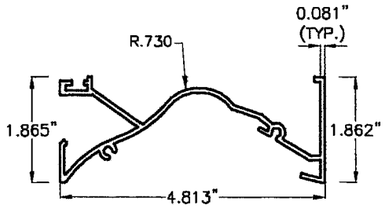

1L HEAD

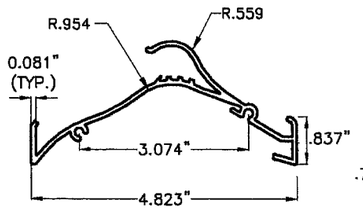

2L BLADE

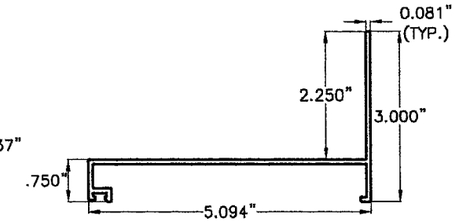

3L SILL

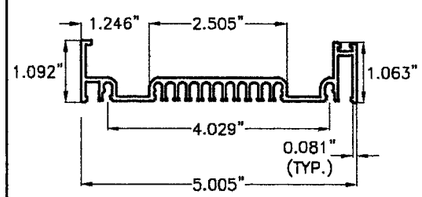

4L JAMB

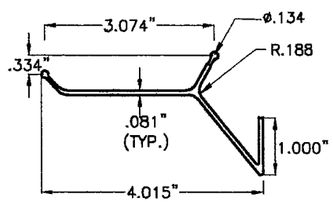

5L BLADE BRACE, 2" LONG

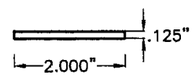

6L BLADE BRACE FLAT BAR

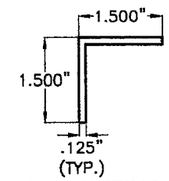

7L JAMB MOUNTING ANGLE

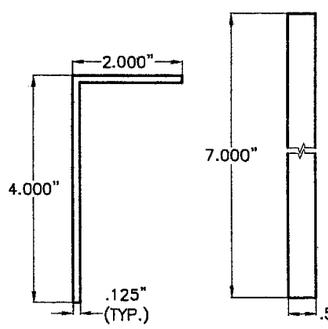

7L1 OPTIONAL JAMB MOUNTING ANGLE

10L FLAT MULLION CLAMP

REQ'D LENGTH = 2" FOR MULLION 12L

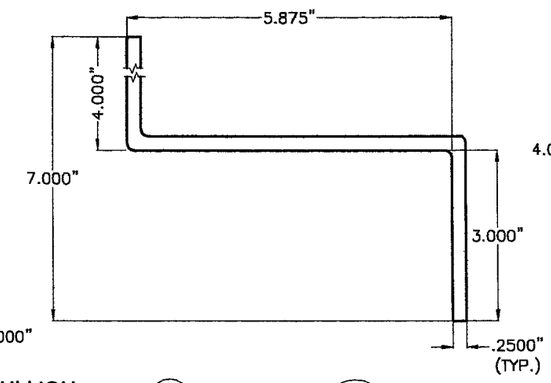

10L1 "Z" MULLION 12L CLAMP 8" LONG

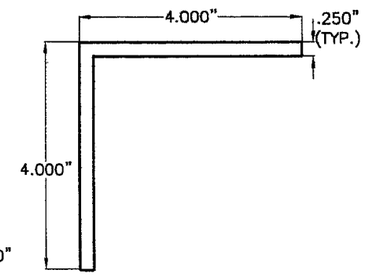

10L2 SLAB ANGLE MULLION 12L BRACKET 8" LONG

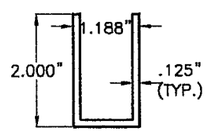

14L MULLION CONNECTOR TYPE 1 AT MULLION 12L 4.278" LONG

15L BLANK-OFF PANEL

4" x .090" x 24"(MAX) ALUM. PLATE

16L BLANK-OFF PANEL

5 1/4" x .090" x 24"(MAX.) ALUM. PLATE

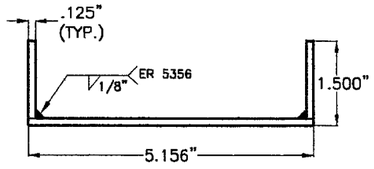

11L PERIMETER WELDED CHANNEL

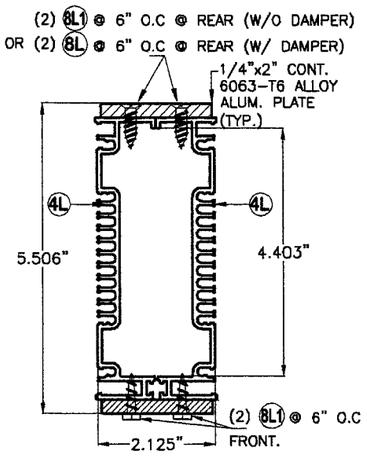

12L MULLION

COMPONENTS

SCALE: 3/8"=1"

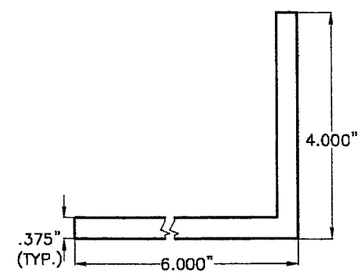

14L1 MULLION CONNECTOR TYPE 2 AT MULLION 12L 8" LONG

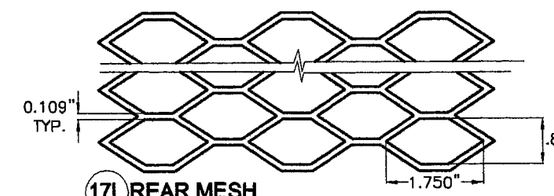

17L REAR MESH

NOMINAL 3/4"x0.050" THICK (0.17 lb/SQ. Ft)

BILL OF MATERIALS SED-5.1 LOUVER ASSEMBLY				
ITEM	DESCRIPTION	MATERIAL	SIZE	REMARKS
1L	EXTRUDED ALUM. HEAD	6063-T5 ALLOY	SEE DETAIL	Fy (MIN.) = 16 ksi
2L	EXTRUDED ALUM. BLADE	6063-T5 ALLOY	SEE DETAIL	Fy (MIN.) = 16 ksi
3L	EXTRUDED ALUM. SILL	6063-T5 ALLOY	SEE DETAIL	Fy (MIN.) = 16 ksi
4L	EXTRUDED ALUM. JAMB	6063-T5 ALLOY	SEE DETAIL	Fy (MIN.) = 16 ksi
5L	EXTRUDED ALUM. BLADE BRACE	6063-T5 ALLOY	SEE DETAIL	Fy (MIN.) = 16 ksi
6L	EXTRUDED ALUM. FLAT BAR	6063-T5 ALLOY	SEE DETAIL	Fy (MIN.) = 16 ksi
7L	EXTRUDED ALUM. JAMB MOUNTING ANGLE	6063-T6 ALLOY	SEE DETAIL	Fy (MIN.) = 25 ksi
7L1	OPTIONAL EXTRUDED ALUM. JAMB MOUNTING ANGLE	6063-T6 ALLOY	SEE DETAIL	Fy (MIN.) = 25 ksi
8L	FLAT HEAD TEK SCREWS	ZINC PLATED STEEL	1/4"ø x 3/4" LONG	ITW / BUILDEX
8L1	HEX HEAD TEK SCREWS	ZINC PLATED STEEL	1/4"ø x 1" LONG	ITW / BUILDEX
9L	NEOPRENE WASHER HEAD S.M.S.	410 STAINLESS STEEL	#8 x 1-1/2" LONG	LOUVER BLADE AND FRAME ASSEMBLY (1L, 2L, & 4L)
10L	FLAT MULLION CLAMP	ASTM A-36 OR ASTM A-653 GRADE 40 OR AISI 304 S.S. *	SEE DETAIL	REQ'D LENGTH = 2" FOR MULLION 12L Fy (MIN.) = 36 ksi
10L1	"Z" MULLION 12L CLAMP	ASTM A-36 OR ASTM A-653 GRADE 40 OR AISI 304 S.S. *	SEE DETAIL	8" LONG AT HEAD & SILL AT BLADE W/ MULLION 12L Fy (MIN.) = 36 ksi
10L2	ANGLE MULLION BRACKET	6063-T6 ALLOY	SEE DETAIL	8" LONG AT HEAD & SILL AT BLADE W/ MULLIONS. Fy (MIN.) = 25 ksi
11L	PERIMETER WELDED CHANNEL	6063-T5 ALLOY	SEE DETAIL	Fy (MIN.) = 16 ksi
12L	MULLION	6063-T5 ALLOY	SEE DETAIL	Fy (MIN.) = 16 ksi
14L	MULLION CONNECTOR TYPE 1 AT MULLION 12L	6063-T6 ALLOY	SEE DETAIL	Fy (MIN.) = 16 ksi
14L1	MULLION CONNECTOR TYPE 2 AT MULLION 12L	ASTM A-36 *	SEE DETAIL	Fy (MIN.) = 36 ksi
15L	BLANK-OFF PANEL	6063-T5 ALLOY	SEE DETAIL	Fy (MIN.) = 16 ksi
16L	BLANK-OFF PANEL	6063-T5 ALLOY	SEE DETAIL	Fy (MIN.) = 16 ksi
17L	REAR MESH	3003-H14 ALLOY	SEE DETAIL	Fy (MIN.) = 16 ksi

* NOTE: STEEL COMPONENTS SHALL BE PROTECTED FROM CORROSION W/ A PRIMER CONSISTING OF RED OXIDE PAINT OR SIMILAR W/ GALVANIZING (G-60) AS AN OPTION. ADDITIONALLY, FINAL (FINISH) PAINT FOR THESE PROFILES SHALL BE IN ACCORDANCE W/ SECTION 2003.8.4.2 OF THE F.B.C., ADDRESSING PROTECTION OF ALUMINUM IN CONTACT W/ METALS NOT CONSIDERED COMPATIBLE.

PRODUCT REVISED
as complying with the Florida Building Code
Acceptance No. 09-0922.11
Expiration Date 11/20/2013
By
Miami Dade Product Control Division

F.B.C. (High Velocity Hurricane Zone)

© 2008 TILTECO INC.

TILTECO INC.
TILLIT TESTING & ENGINEERING COMPANY
8355 N.W. 36th. St., Ste. 305, VIRGINIA GARDENS, Fl. 33166
Phone: (305)871-1530 . Fax: (305)871-1531
e-mail: tilteco@aol.com
EB-0006719
WALTER A. TILLIT Jr. P.E.
FLORIDA Lic. # 44167

SED-5.1 LOUVER SYSTEM WITH OR WITHOUT CD-151 DAMPER ASSEMBLY

UNITED ENERTECH, INC.
3005 SOUTH HICKORY ST.
CHATTANOOGA, TN 37407
PHONE: (423)698-7715 FAX:(423)698-6629

REV. No	DESCRIPTION	DATE	REV. No	DESCRIPTION	DATE
1	OLD 08-004	09/08/09	3		
2			4		

DRAWN BY I.A.
09/08/09 DATE
09-167 DRAWING No
SHEET 2 OF 16

9/10/09

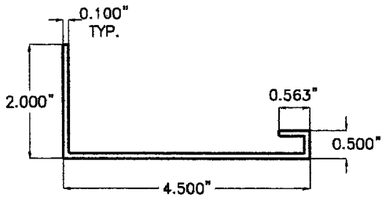

1D HEAD & SILL

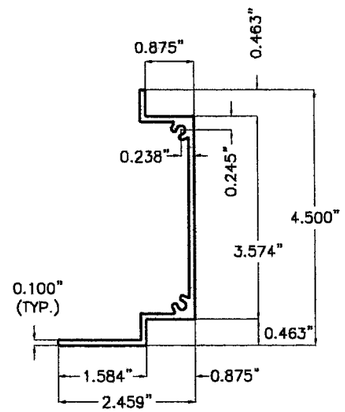

2D JAMB

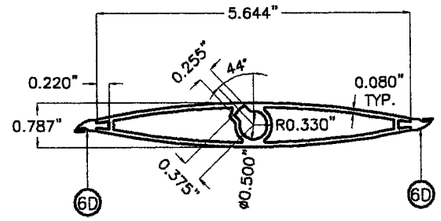

3D REGULAR DAMPER BLADE

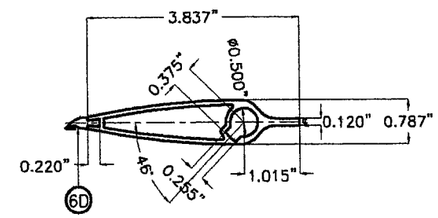

3D1 TOP DAMPER HALF BLADE

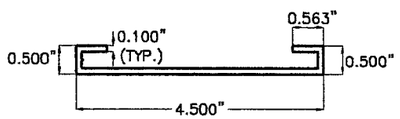

7D MID-HEIGHT HEAD or SILL

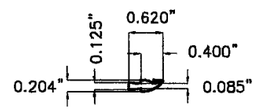

6D BLADE SEAL

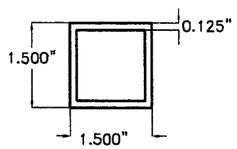

1I INTERMEDIATE TUBE FRAME

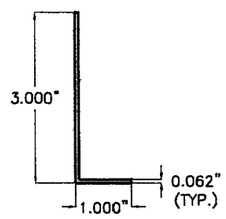

8D ALUM. ANGLE BLADE STOP

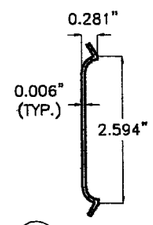

9D JAMB SEAL

BILL OF MATERIALS CD-151 DAMPER ASSEMBLY

ITEM	DESCRIPTION	MATERIAL	SIZE	REMARKS
1D	EXTRUDED ALUM. HEAD & SILL	6063-T5 ALUMINUM ALLOY	SEE DETAIL	Fy(MIN.)=33.4 ksi
2D	EXTRUDED ALUM. JAMB	6063-T5 ALUMINUM ALLOY	SEE DETAIL	Fy(MIN.)=31.6 ksi
3D	EXTRUDED ALUM. REGULAR DAMPER BLADE.	6063-T5 ALUMINUM ALLOY	SEE DETAIL	Fy(MIN.)=31.8 ksi
3D1	EXTRUDED ALUM. TOP DAMPER HALF BLADE.	6063-T5 ALUMINUM ALLOY	SEE DETAIL	Fy(MIN.)=31.8 ksi
4D	BUSHING	BRONZE	1/2" I.D.(5/8" O.D.)x1/4"	0.059"THICK @ WASHER SIDE
5D	AXLE PIN	ZAMAC No. 3 ZINC	1/2"x3 1/8"	WITH NYLON WASHER & LOCK RING
6D	BLADE SEAL	SILICONE	SEE DETAIL	ASTM D-2000, 60-65 DUROMETER
7D	MID-HEIGHT EXTRUDED ALUM. HEAD or SILL	6063-T5 ALUMINUM ALLOY	SEE DETAIL	Fy(MIN.)=29.8 ksi
8D	ALUM. ANGLE BLADE STOP	6063-T5 ALUMINUM ALLOY	SEE DETAIL	WITH VINYL WEATHER STRIP AT END OF 3" LEG
9D	JAMB SEAL	STAINLESS STEEL 316 SERIES	SEE DETAIL	ATTACHED TO 2D W/(3) DOUBLE SIDED (1"x1/8") TAPES
10D	S.D.S. TEK SCREW	ZINC PLATED	#8 X 1/2"	FASTEN TO 8D @ 12" O.C., 2 1/2" FROM ENDS
11	INTERMEDIATE TUBE FRAME	6063-T5 ALUMINUM ALLOY	SEE DETAIL IN THIS SHEET AND SHEET 9.	Fy(MIN.)=31.9 ksi INSTALL BETWEEN DAMPER & LOUVER FRAME.

CD-151 DAMPER AND INTERMEDIATE TUBE FRAME COMPONENTS

(EXCLUDES COMPONENTS FOR OPERATIVE MECHANISM, SEE NOTE 8/1)

PRODUCT REVISED
as complying with the Florida Building Code
Acceptance No 09-0922.11
Expiration Date 11/22/2013
By
Miami-Dade Product Control Division

F.B.C. (High Velocity Hurricane Zone)

COMPONENTS

SCALE: 3/8"=1"

9/10/09

© 2008 TILTECO INC.

TILTECO INC.
TILLIT TESTING & ENGINEERING COMPANY
6355 N.W. 36th, St., Ste. 305, VIRGINIA GARDENS, Fl. 33166
Phone: (305)871-1530 . Fax: (305)871-1531
e-mail: tilteco@aol.com
EB-0006719
WALTER A. TILLIT Jr. P.E.
FLORIDA Lic. # 44167

SED-5.1 LOUVER SYSTEM WITH OR WITHOUT CD-151 DAMPER ASSEMBLY

UNITED ENERTECH, INC.
3005 SOUTH HICKORY ST.
CHATTANOOGA, TN 37407
PHONE: (423)698-7715 FAX:(423)698-6629

REV. No	DESCRIPTION	DATE	REV. No	DESCRIPTION	DATE
1	OLD 08-004	09/08/09	3		
2			4		

DRAWN BY I.A.
09/08/09 DATE
09-167 DRAWING No
SHEET 3 OF 16

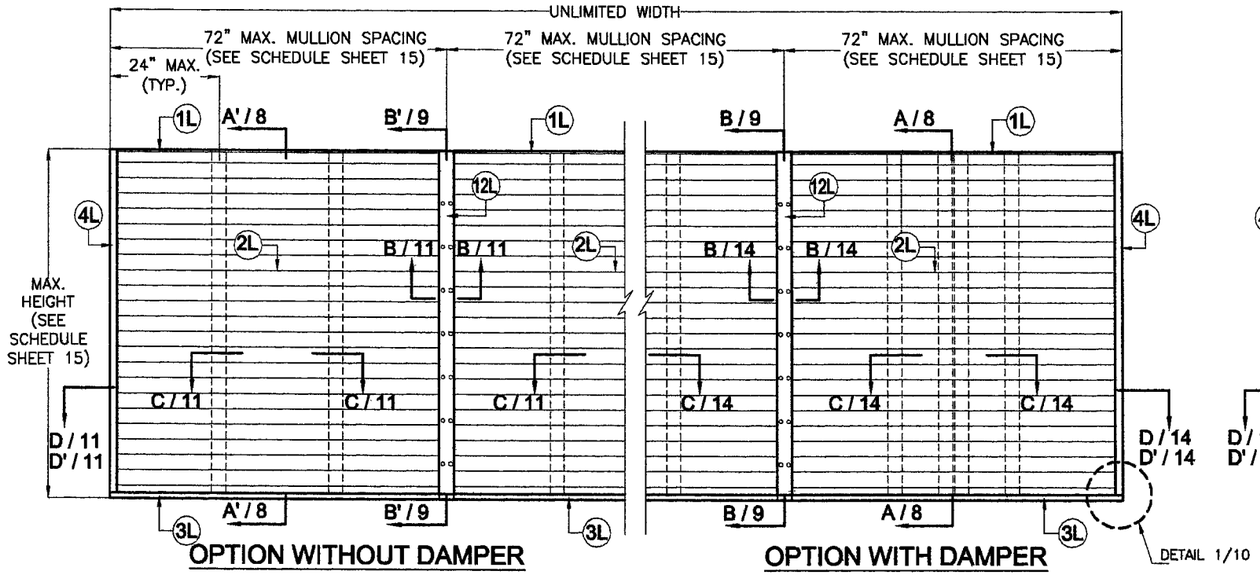

OPTION WITHOUT DAMPER

OPTION WITH DAMPER

EXTERIOR ELEVATION

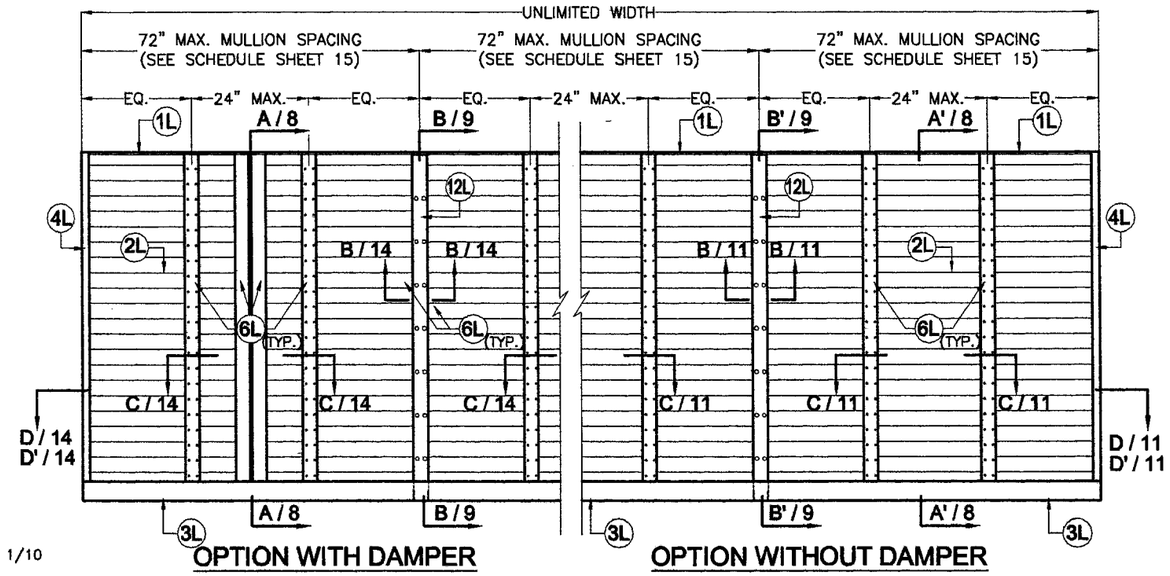

OPTION WITH DAMPER

OPTION WITHOUT DAMPER

INTERIOR ELEVATION

MULTIPLE SED 5.1 LOUVER UNITS WITH OR WITHOUT DAMPER WITH MULLION 12L

N.T.S

(PRESURE RATING VARIES, SEE SCHEDULE ON SHEET 15)

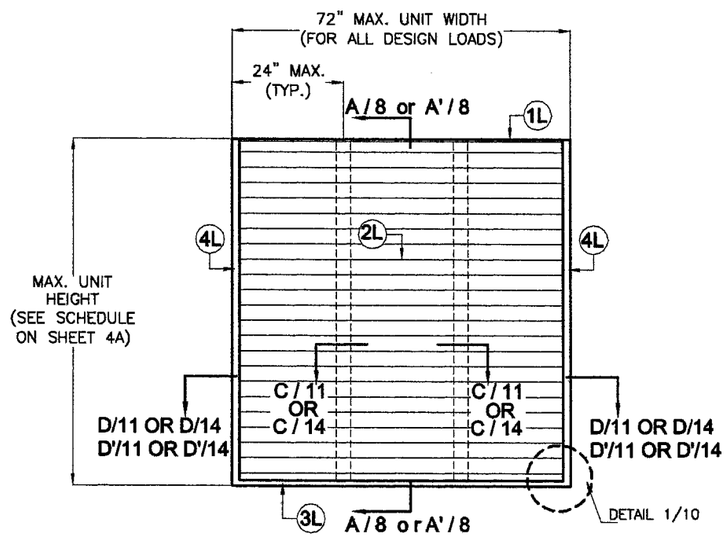

EXTERIOR ELEVATION
WITH OR WITHOUT DAMPER

PRESURE RATING: (VARIES SEE SCHEDULE)

SINGLE SED 5.1 LOUVER UNITS WITH OR WITHOUT DAMPER W/ SQUARE EDGES

N.T.S

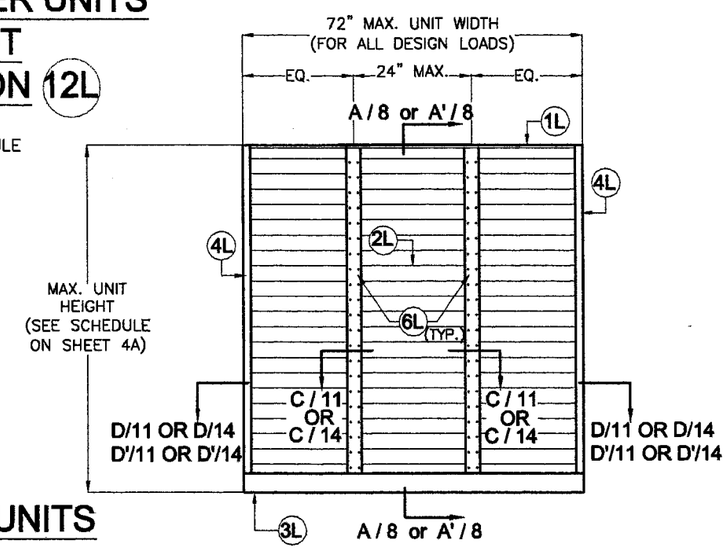

INTERIOR ELEVATION
WITH OR WITHOUT DAMPER

PRESURE RATING: (VARIES SEE SCHEDULE)

PRODUCT REVISED
as complying with the Florida Building Code
Acceptance No. 09-0922.11
Expiration Date 11/20/2013
By
Miami Dade Product Control Division

F.B.C. (High Velocity Hurricone Zone)

9/10/09

© 2008 TILTECO INC.

TILTECO INC.
TILLIT TESTING & ENGINEERING COMPANY
6355 N.W. 36th. St., Ste. 305, VIRGINIA GARDENS, Fl. 33166
Phone: (305)871-1530 . Fax: (305)871-1531
e-mail: tilteco@aol.com
EB-0006719
WALTER A. TILLIT Jr. P.E.
FLORIDA Lic. # 44167

SED-5.1 LOUVER SYSTEM WITH OR WITHOUT CD-151 DAMPER ASSEMBLY

UNITED ENERTECH, INC.
3005 SOUTH HICKORY ST.
CHATTANOOGA, TN 37407
PHONE: (423)698-7715 FAX:(423)698-6629

REV. No	DESCRIPTION	DATE	REV. No	DESCRIPTION	DATE
1	OLD 08-004	09/08/09	3		
2			4		

DRAWN BY I.A.

09/08/09 DATE

09-167 DRAWING No

SHEET 4 OF 16

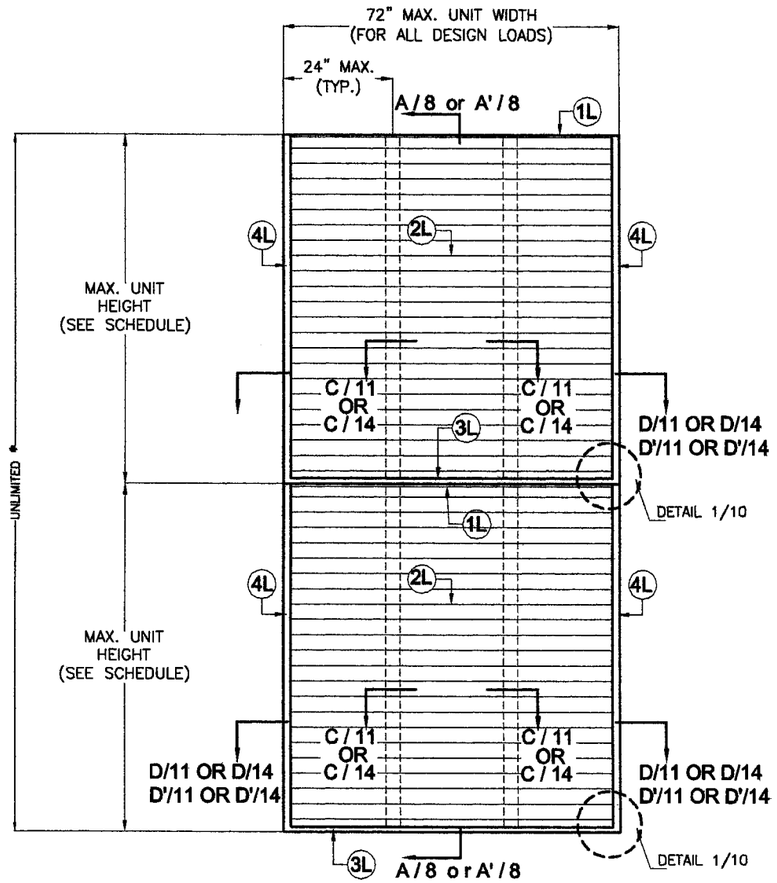

EXTERIOR ELEVATION WITH OR WITHOUT DAMPER

PRESURE RATING: (VARIES SEE SCHEDULE)

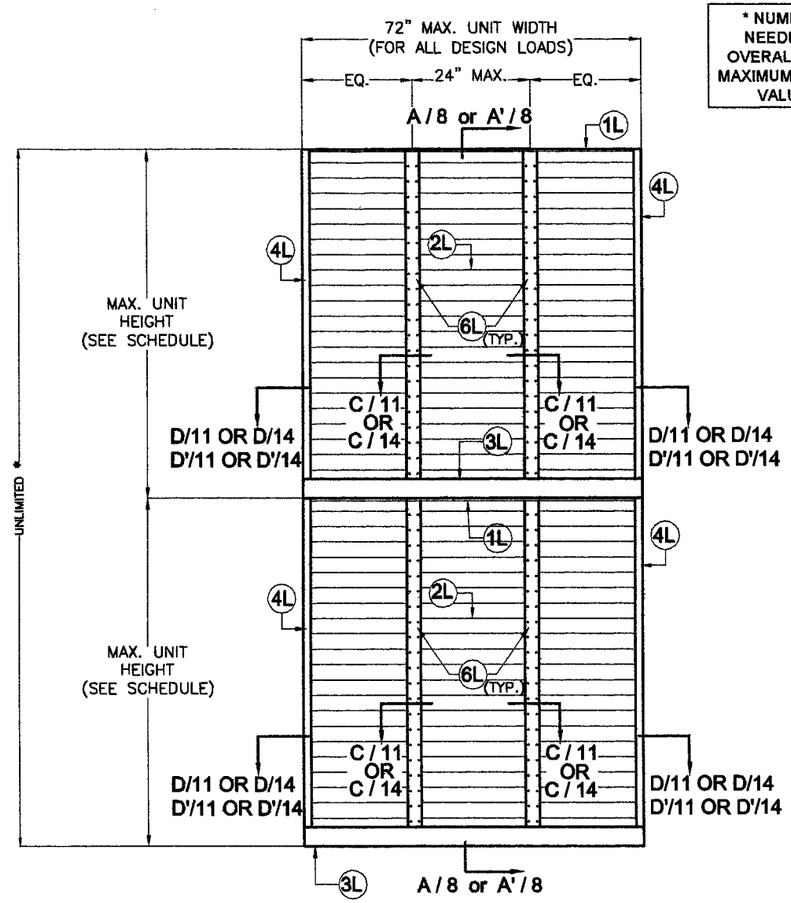

INTERIOR ELEVATION WITH OR WITHOUT DAMPER

PRESURE RATING: (VARIES SEE SCHEDULE)

* NUMBER OF LOUVER PANEL UNITS NEEDED TO ACHIEVE THE OPENING OVERALL HEIGHT MAY VARY. HOWEVER MAXIMUM UNIT HEIGHT SHALL NO EXCEED VALUES, SHOWN ON SCHEDULE.

MAX. UNIT HEIGHT FOR A GIVEN DESIGN LOAD SCHEDULE, APPLICABLE TO SINGLE UNITS W/ SQUARE EDGES W/O MULLION

DESIGN WIND LOAD (W)	MAX. UNIT HEIGHT
40	10'–0"
45	10'–0"
50	10'–0"
55	10'–0"
60	10'–0"
65	10'–0"
70	10'–0"
75	9'–11"
80	9'–7"
85	9'–4"
90	9'–0"
95	8'–10"
100	8'–7"
105	8'–4"
110	8'–2"
115	7'–12"
120	7'–10"
125	7'–8"
130	7'–6"
135	7'–5"
140	7'–3"
145	7'–1"
150	7'–0"

SINGLE SED 5.1 LOUVER UNITS WITH OR WITHOUT DAMPER W/ SQUARE EDGES

N.T.S

PRODUCT REVISED
as complying with the Florida Building Code
Acceptance No 09-0922.11
Expiration Date 11/20/2013
By
Miami Dade Product Control Division

F.B.C. (High Velocity Hurricane Zone)

4/10/09

© 2008 TILTECO INC.

TILTECO INC.
TILLIT TESTING & ENGINEERING COMPANY
6355 N.W. 36th. St., Ste. 305, VIRGINIA GARDENS, Fl. 33166
Phone: (305)871-1530 . Fax: (305)871-1531
e-mail: tilteco@aol.com
EB-0006719
WALTER A. TILLIT Jr. P.E.
FLORIDA Lic. # 44167

SED-5.1 LOUVER SYSTEM WITH OR WITHOUT CD-151 DAMPER ASSEMBLY

UNITED ENERTECH, INC.
3005 SOUTH HICKORY ST.
CHATTANOOGA, TN 37407
PHONE: (423)698-7715 FAX:(423)698-6629

REV. No	DESCRIPTION	DATE	REV. No	DESCRIPTION	DATE
1	OLD 08-004	09/08/09	3		
2			4		

DRAWN BY I.A.

09/08/09 DATE

09-167 DRAWING No

SHEET 4A OF 16

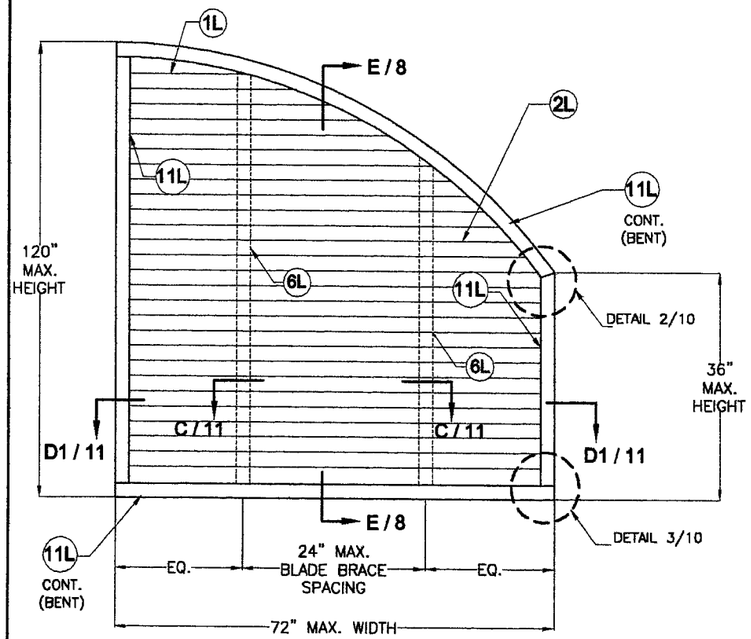

EXTERIOR ELEVATION

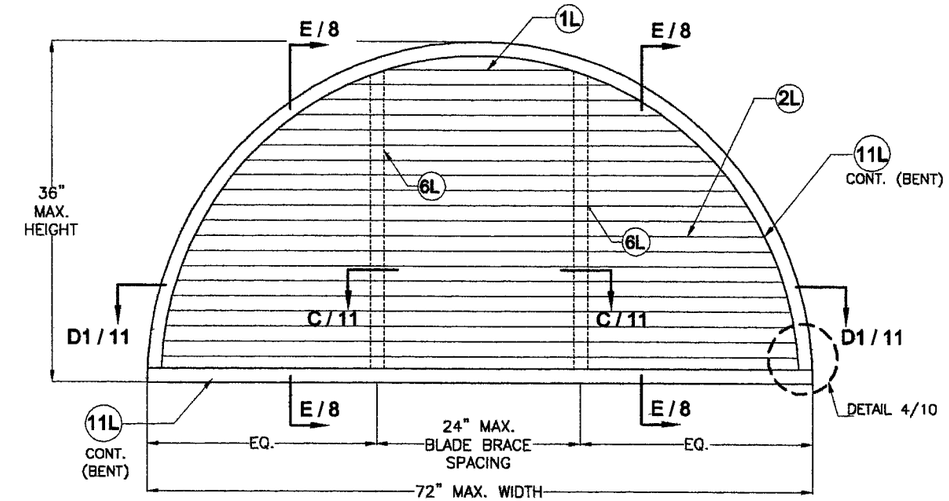

EXTERIOR ELEVATION

QUALIFIES THE FOLLOWING SHAPES:

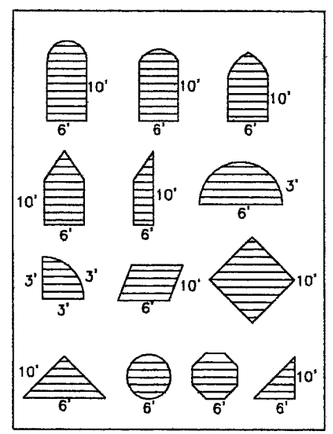

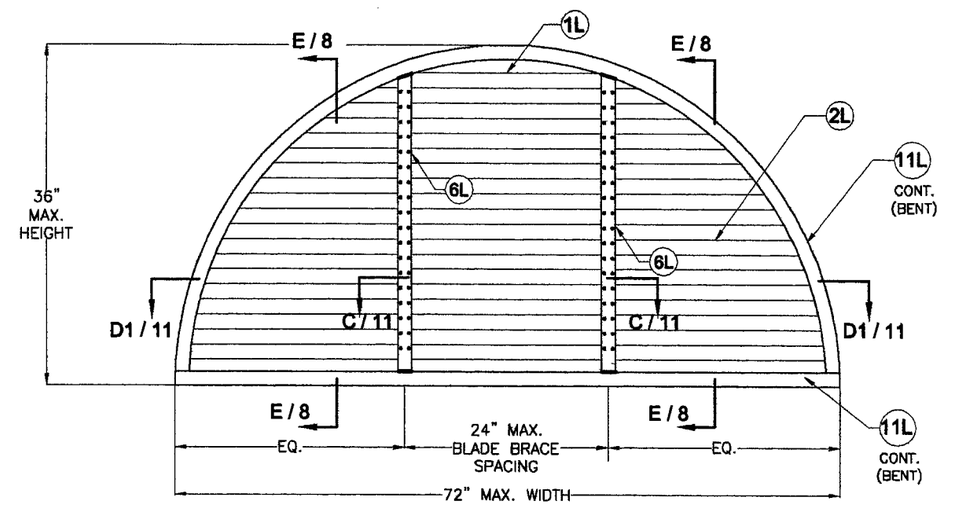

INTERIOR ELEVATION

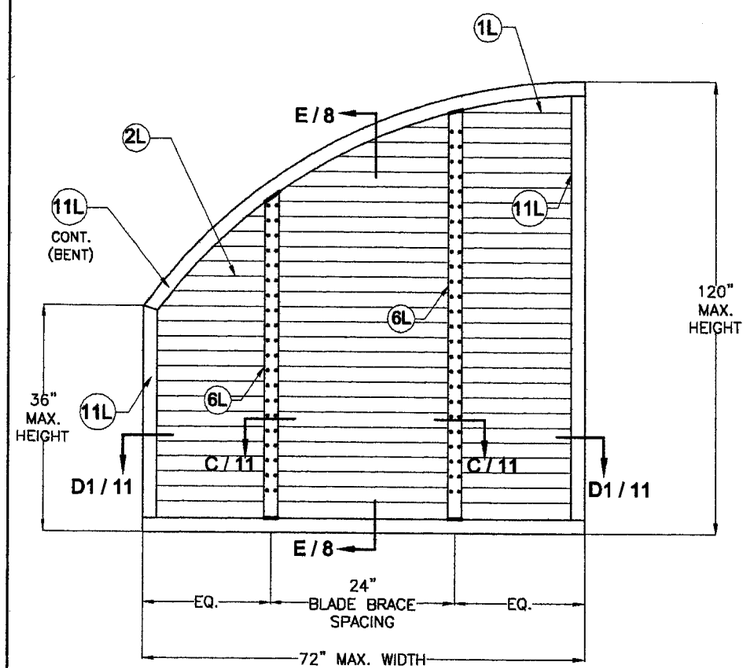

INTERIOR ELEVATION

SINGLE SED 5.1 LOUVER UNITS WITHOUT DAMPER W/ CURVED EDGES

N.T.S

(PRESSURE RATING: +150, −150 PSF)

PRODUCT REVISED
as complying with the Florida Building Code
Acceptance No 09-0922.11
Expiration Date 11/20/2013
By
Miami Dade Product Control Division

F.B.C. (High Velocity Hurricane Zone)

9/10/09

© 2008 TILTECO INC.

TILTECO INC.
TILLIT TESTING & ENGINEERING COMPANY
6355 N.W. 36th. St., Ste. 305, VIRGINIA GARDENS, FL 33166
Phone: (305)871-1530 . Fax: (305)871-1531
e-mail: tilteco@aol.com
EB-0006719
WALTER A. TILLIT Jr. P.E.
FLORIDA Lic. # 44167

SED-5.1 LOUVER SYSTEM WITH OR WITHOUT CD-151 DAMPER ASSEMBLY

UNITED ENERTECH, INC.
3005 SOUTH HICKORY ST.
CHATTANOOGA, TN 37407
PHONE: (423)698-7715 FAX:(423)698-6629

REV. No	DESCRIPTION	DATE	REV. No	DESCRIPTION	DATE
1	OLD 08-004	09/08/09	3		
2			4		

DRAWN BY I.A.

09/08/09 DATE

09-167 DRAWING No

SHEET 5 OF 16

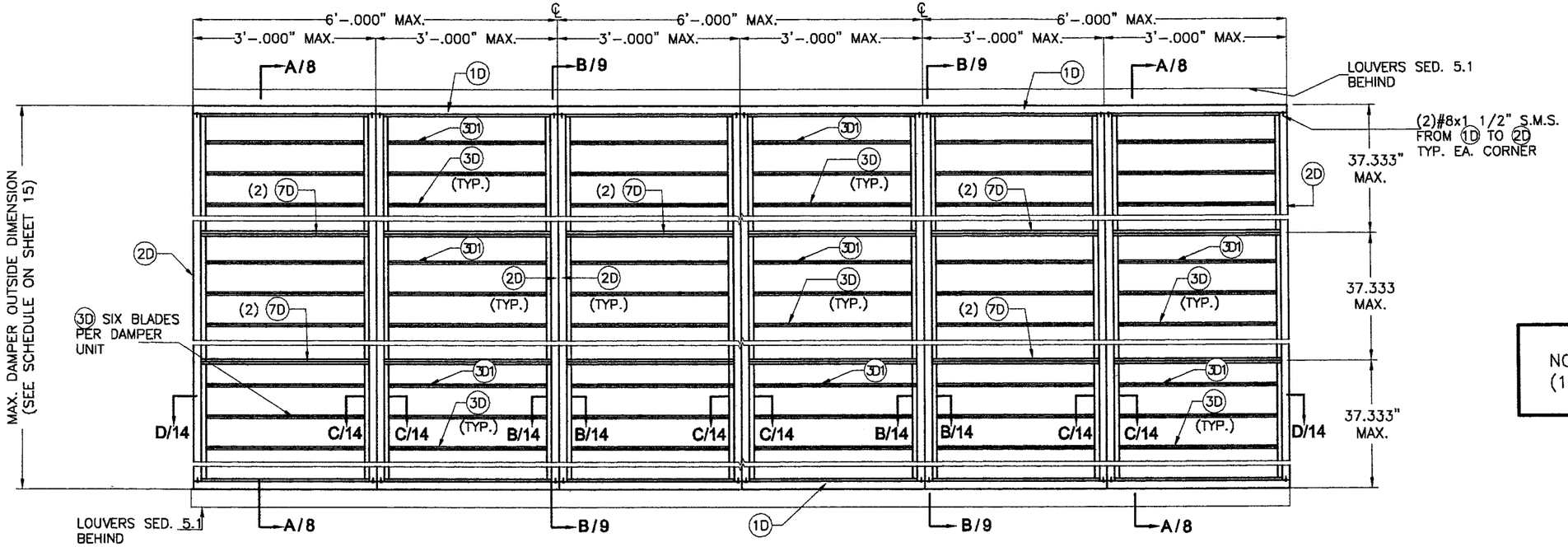

NOTE:
(1) SEE COMPONENTS ON SHEET 3.

INTERIOR ELEVATION: CD-151 DAMPER MULTIPLE UNITS WITH MULLION 12L

SCALE: 1/2"=1'-0"

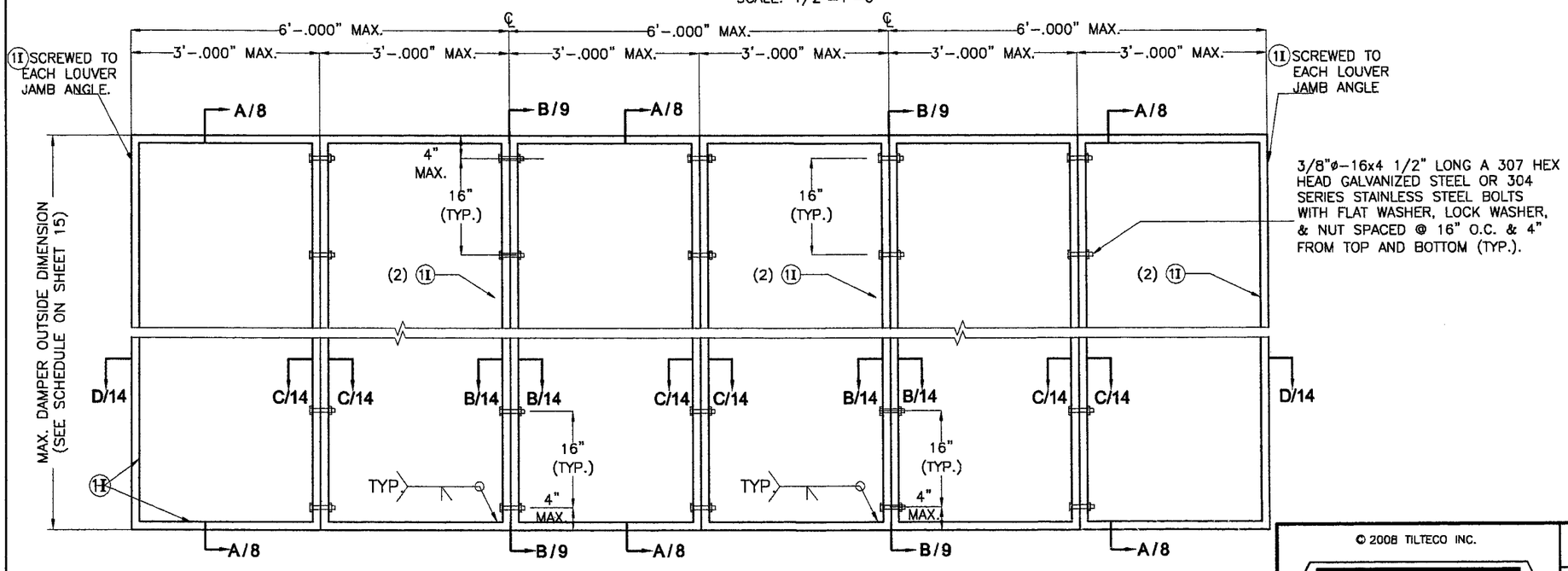

EXTERIOR ELEVATION: INTERMEDIATE TUBE FRAME FOR CD-151 DAMPER ATTACHMENT AT MULTIPLE UNITS WITH MULLION 12L

SCALE: 1/2"=1'-0"

2/10/09

PRODUCT REVISED
as complying with the Florida Building Code
Acceptance No 09-0922.11
Expiration Date 11/20/2013
By
Miami Dade Product Control Division

F.B.C. (High Velocity Hurricane Zone)

© 2008 TILTECO INC.

TILTECO INC.
TILLIT TESTING & ENGINEERING COMPANY
6355 N.W. 36th. St., Ste. 305, VIRGINIA GARDENS, Fl. 33166
Phone: (305)871-1530 . Fax: (305)871-1531
e-mail: tilteco@aol.com
EB-0006719
WALTER A. TILLIT Jr. P.E.
FLORIDA Lic. # 44167

SED-5.1 LOUVER SYSTEM WITH OR WITHOUT CD-151 DAMPER ASSEMBLY

UNITED ENERTECH, INC.
3005 SOUTH HICKORY ST.
CHATTANOOGA, TN 37407
PHONE: (423)698-7715 FAX:(423)698-6629

REV. No	DESCRIPTION	DATE	REV. No	DESCRIPTION	DATE
1	OLD 08-004	09/08/09	3		
2			4		

DRAWN BY I.A.
09/08/09 DATE
09-167 DRAWING No
SHEET 6 OF 16

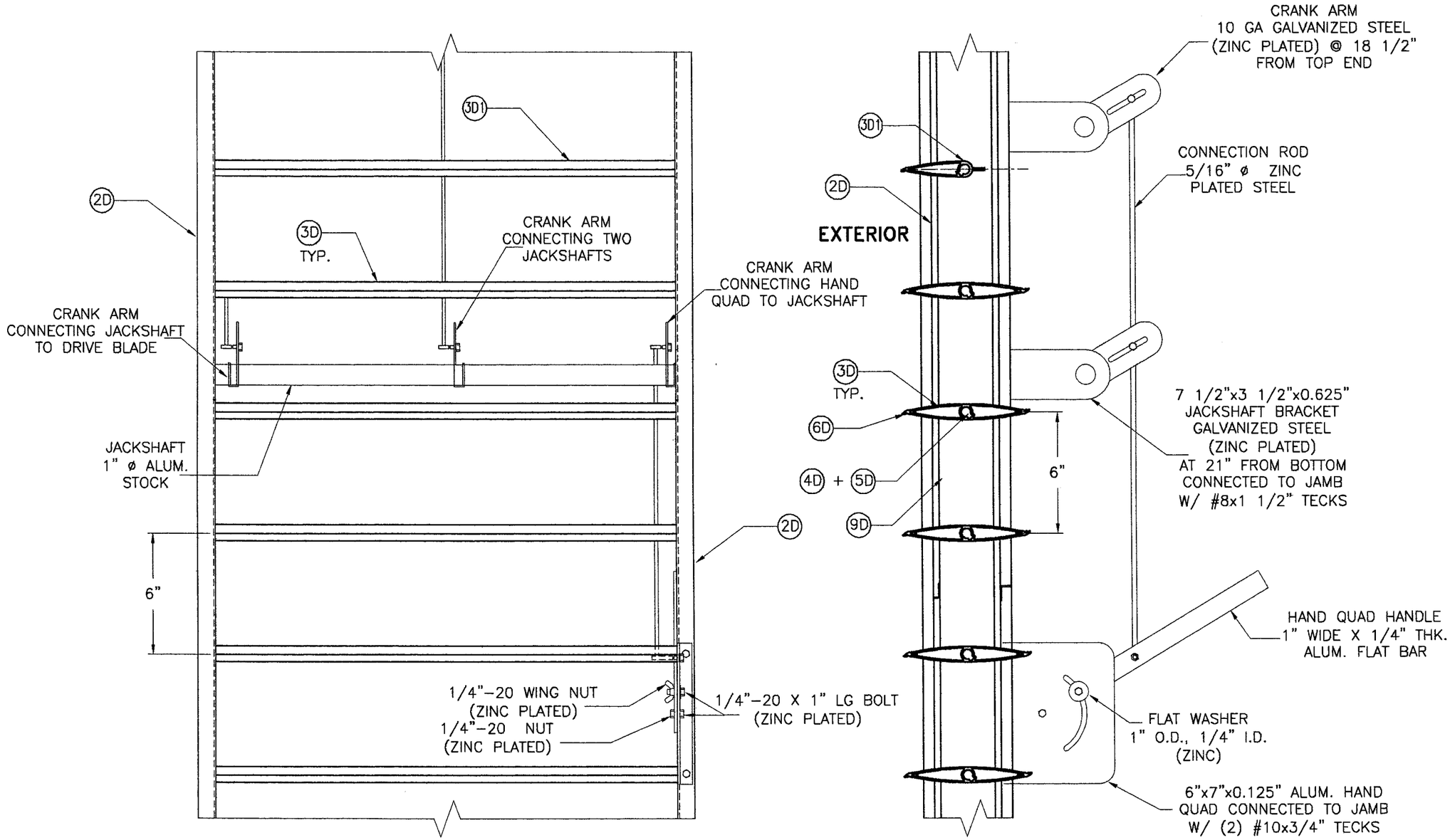

HAND QUADRANT HANDLE MECHANISM

N.T.S.

PRODUCT REVISED
as complying with the Florida Building Code
Acceptance No 09-9922.11
Expiration Date 11/20/2013
By _____
Miami-Dade Product Control Division

F.B.C. (High Velocity Hurricane Zone)

9/10/09

© 2008 TILTECO INC.

TILTECO INC.
TILLIT TESTING & ENGINEERING COMPANY
6355 N.W. 36th. St., Ste. 305, VIRGINIA GARDENS, Fl. 33166
Phone: (305)871-1530 . Fax: (305)871-1531
e-mail: tilteco@aol.com
EB-0006719
WALTER A. TILLIT Jr. P.E.
FLORIDA Lic. # 44167

SED-5.1 LOUVER SYSTEM WITH OR WITHOUT CD-151 DAMPER ASSEMBLY

UNITED ENERTECH, INC.
3005 SOUTH HICKORY ST.
CHATTANOOGA, TN 37407
PHONE: (423)698-7715 FAX:(423)698-6629

REV. No	DESCRIPTION	DATE	REV. No	DESCRIPTION	DATE
1	OLD 08-004	09/08/09	3		
2			4		

DRAWN BY I.A.

09/08/09 DATE

09-167 DRAWING No

SHEET 7 OF 16

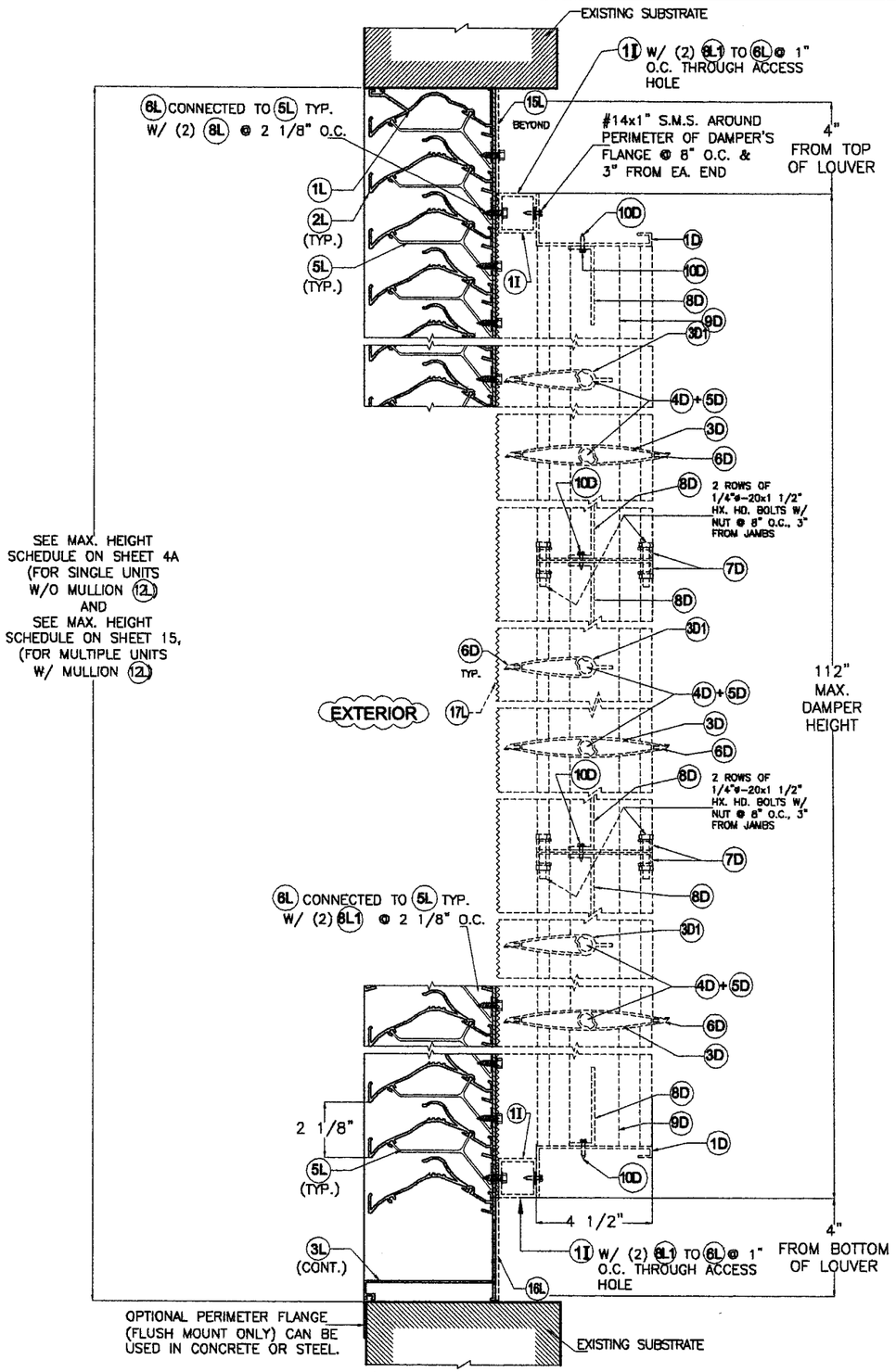

SECTION A - A

SCALE: 3/16"=1"

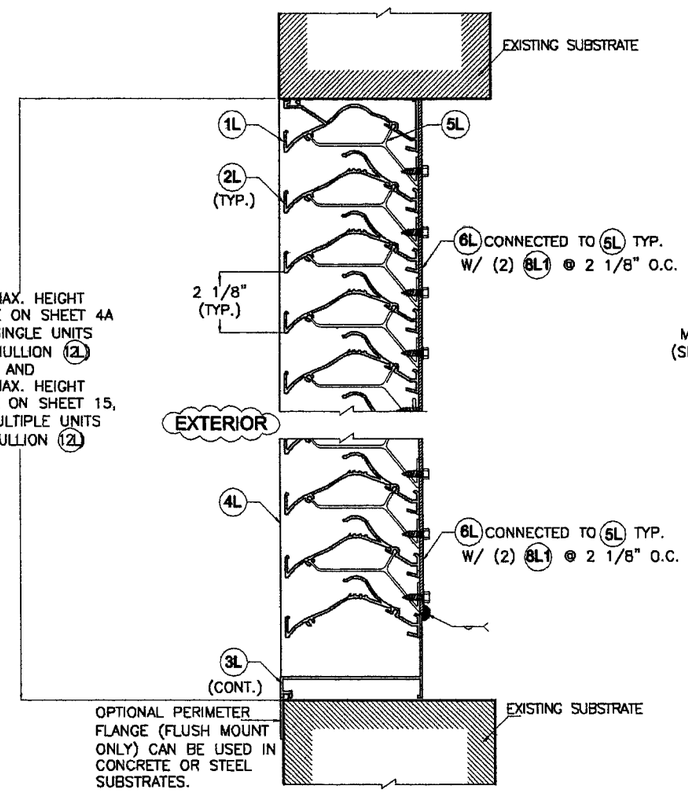

SECTION A' - A'

SCALE: 3/16"=1"

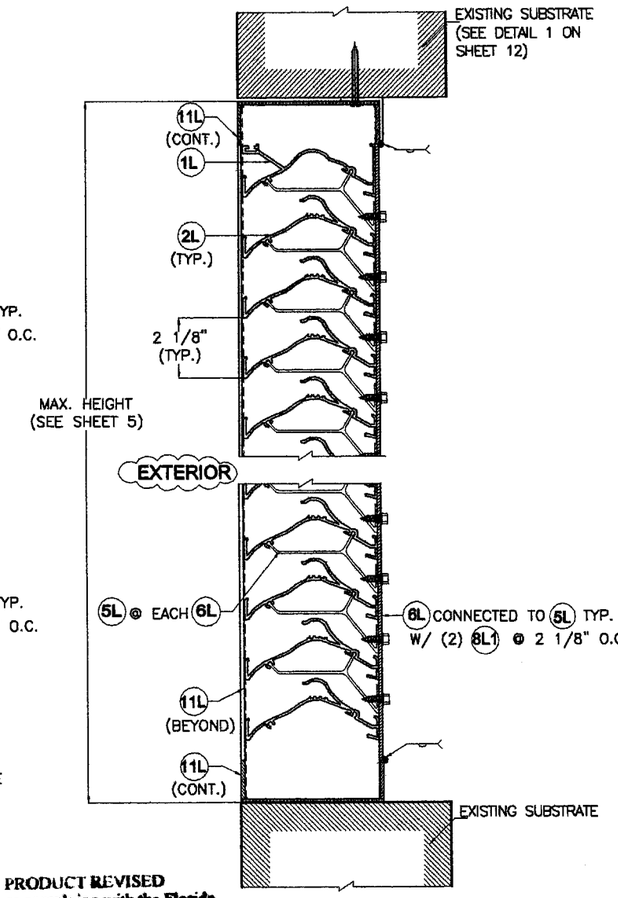

SECTION E - E

SCALE: 3/16"=1"

PRODUCT REVISED
as complying with the Florida Building Code
Acceptance No 09-0922.11
Expiration Date 11/20/2013
By
Miami Dade Product Control Division

F.B.C. (High Velocity Hurricane Zone)

9/10/09

© 2008 TILTECO INC.

TILTECO INC.
TILLIT TESTING & ENGINEERING COMPANY
6355 N.W. 36th. St., Ste. 305, VIRGINIA GARDENS, Fl. 33166
Phone: (305)871-1530 . Fax: (305)871-1531
e-mail: tilteco@aol.com
EB-0006719
WALTER A. TILLIT Jr. P.E.
FLORIDA Lic. # 44167

SED-5.1 LOUVER SYSTEM WITH OR WITHOUT CD-151 DAMPER ASSEMBLY

UNITED ENERTECH, INC.
3005 SOUTH HICKORY ST.
CHATTANOOGA, TN 37407
PHONE: (423)698-7715 FAX:(423)698-6629

REV. No	DESCRIPTION	DATE	REV. No	DESCRIPTION	DATE
1	OLD 08-004	09/08/09	3		
2			4		

DRAWN BY I.A.
09/08/09 DATE
09-167 DRAWING No
SHEET 8 OF 16

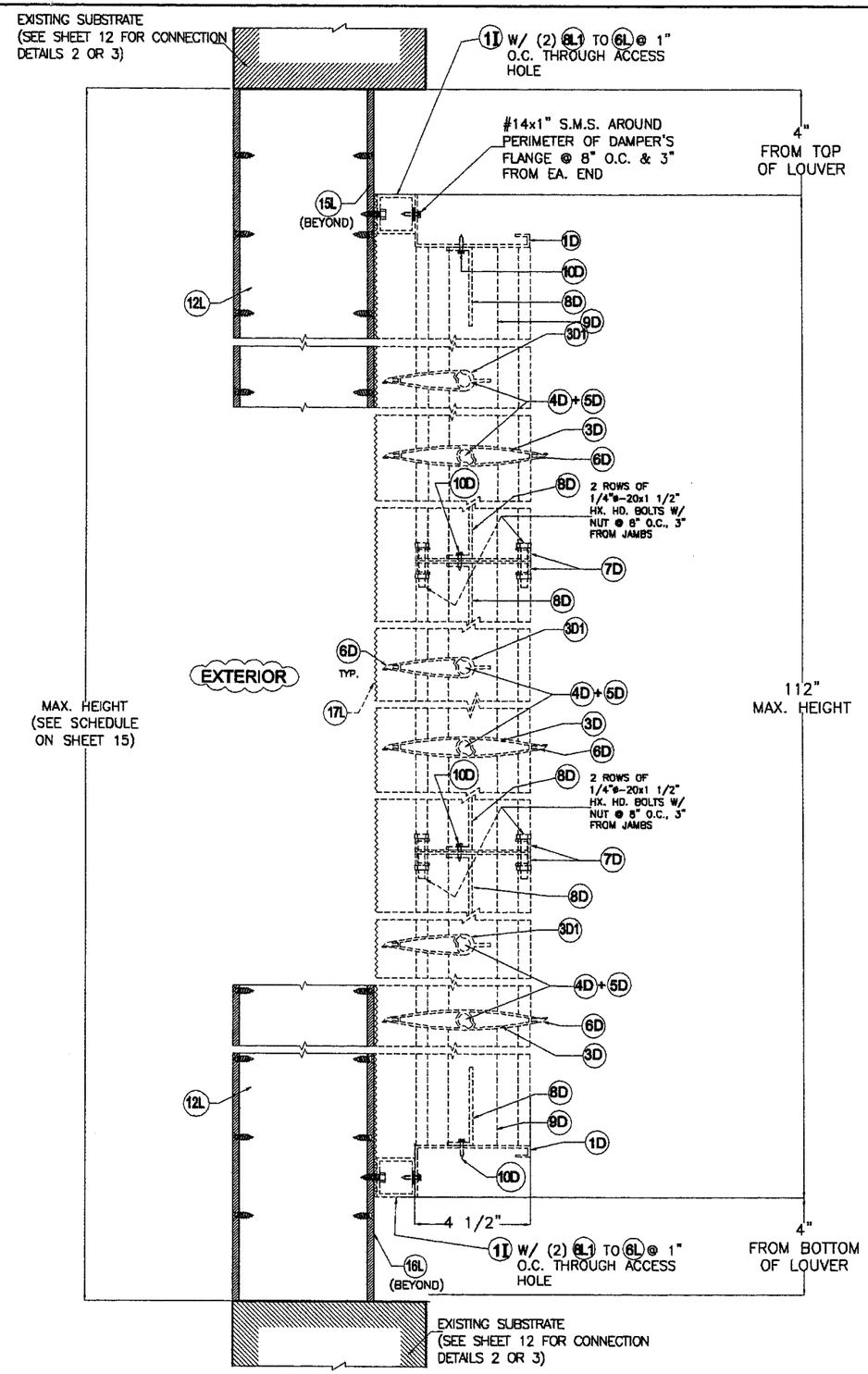

SECTION B - B

SCALE: 3/16"=1"
(DAMPER BEYOND)

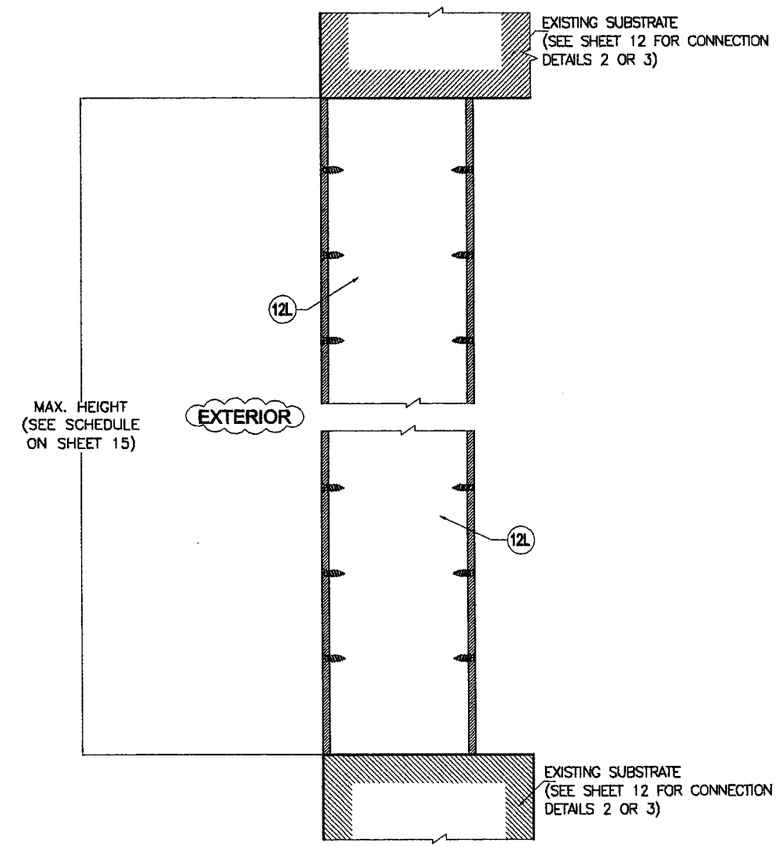

SECTION B' - B'

SCALE: 3/16"=1"

PRODUCT REVISED
as complying with the Florida Building Code
Acceptance No 09-0922.11
Expiration Date 11/20/2013
By
Miami Dade Product Control Division

F.B.C. (High Velocity Hurricane Zone)

9/10/09

© 2008 TILTECO INC.

TILTECO INC.
TILLIT TESTING & ENGINEERING COMPANY
6355 N.W. 36th. St., Ste. 305, VIRGINIA GARDENS, Fl. 33166
Phone: (305)871-1530 . Fax: (305)871-1531
e-mail: tilteco@aol.com
EB-0006719
WALTER A. TILLIT Jr. P.E.
FLORIDA Lic. # 44167

SED-5.1 LOUVER SYSTEM WITH OR WITHOUT CD-151 DAMPER ASSEMBLY

UNITED ENERTECH, INC.
3005 SOUTH HICKORY ST.
CHATTANOOGA, TN 37407
PHONE: (423)698-7715 FAX:(423)698-6629

REV. No	DESCRIPTION	DATE	REV. No	DESCRIPTION	DATE
1	OLD 08-004	09/08/09	3		
2			4		

DRAWN BY I.A.
09/08/09 DATE
09-167 DRAWING No
SHEET 9 OF 16

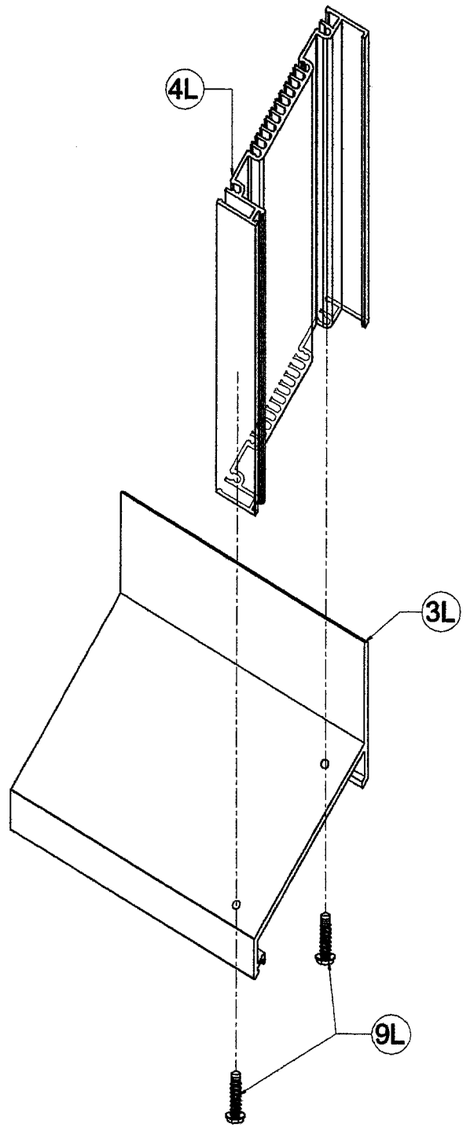

DETAIL 1
CORNER AT BOTTOM
N.T.S

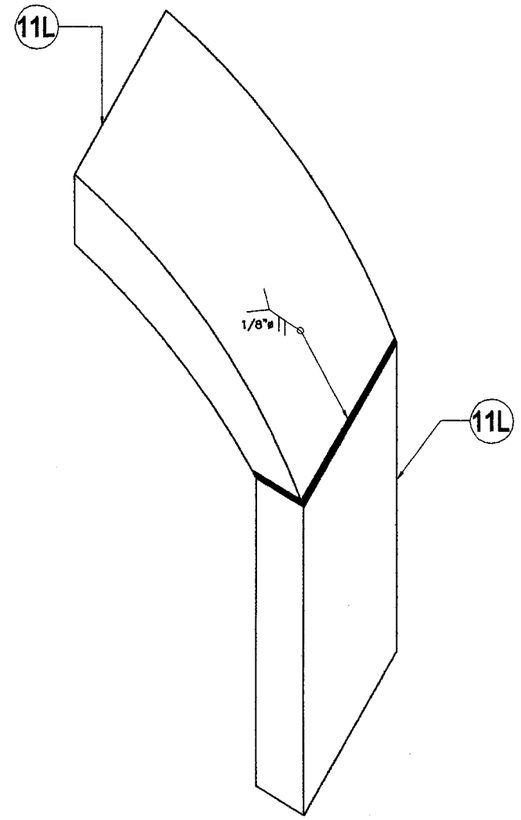

DETAIL 2
CORNER AT TOP
N.T.S

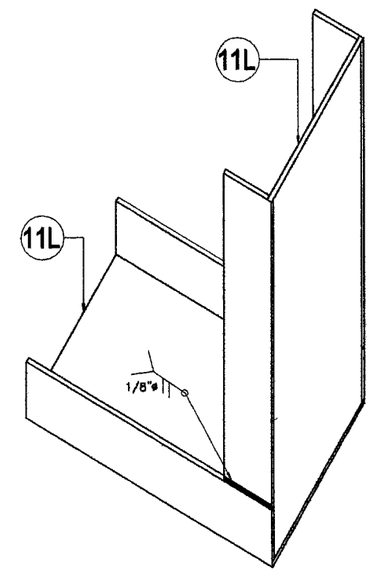

DETAIL 3
CORNER AT BOTTOM
N.T.S

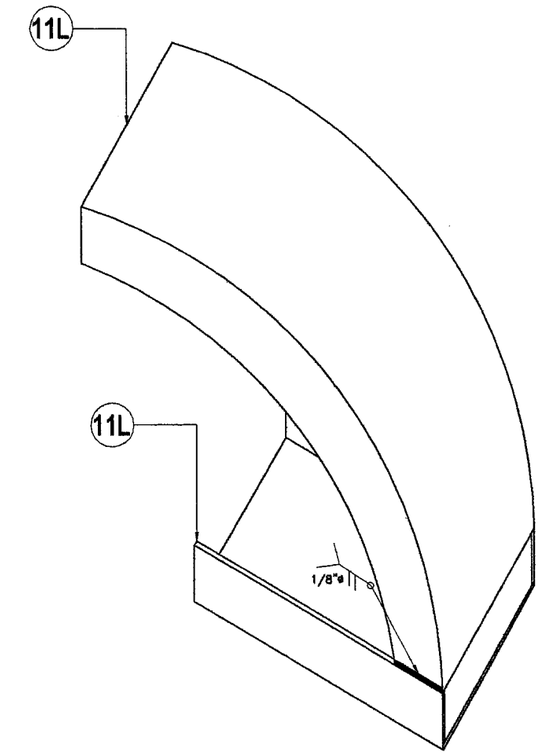

DETAIL 4
CORNER AT BOTTOM
N.T.S

PRODUCT REVISED
as complying with the Florida
Building Code
Acceptance No 09-0922.11
Expiration Date 11/20/2013
By
Miami-Dade Product Control
Division

F.B.C. (High Velocity Hurricane Zone)

9/10/09

© 2008 TILTECO INC.

TILTECO INC.
TILLIT TESTING & ENGINEERING COMPANY
6355 N.W. 36th. St., Ste. 305, VIRGINIA GARDENS, Fl. 33166
Phone: (305)871-1530 . Fax: (305)871-1531
e-mail: tilteco@aol.com
EB-0006719
WALTER A. TILLIT Jr. P.E.
FLORIDA Lic. # 44167

SED-5.1 LOUVER SYSTEM WITH OR WITHOUT CD-151 DAMPER ASSEMBLY

UNITED ENERTECH, INC.
3005 SOUTH HICKORY ST.
CHATTANOOGA, TN 37407
PHONE: (423)698-7715 FAX:(423)698-6629

REV. No	DESCRIPTION	DATE	REV. No	DESCRIPTION	DATE
1	OLD 08-004	09/08/09	3		
2			4		

DRAWN BY I.A.
09/08/09 DATE
09-167 DRAWING No
SHEET 10 OF 16

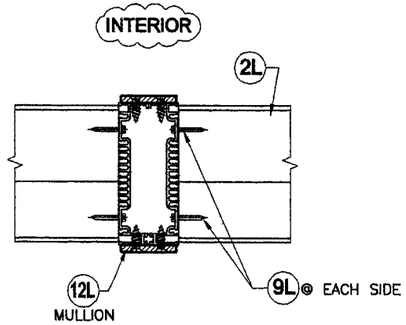

SECTION B-B
@ 12L

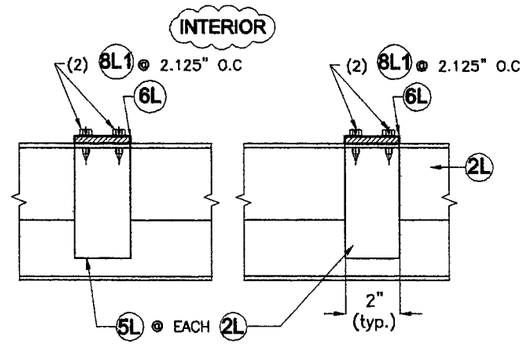

SECTION C-C

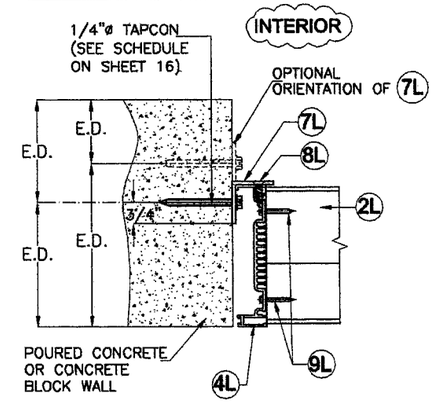

SECTION D-D
CONCRETE BLOCK

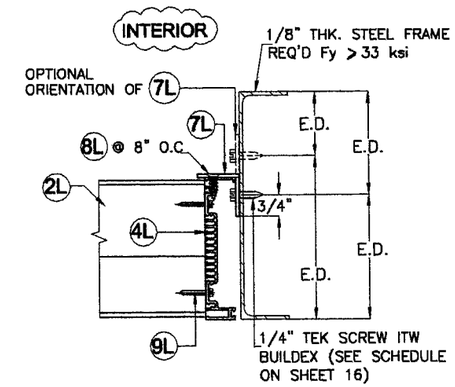

SECTION D-D
STEEL

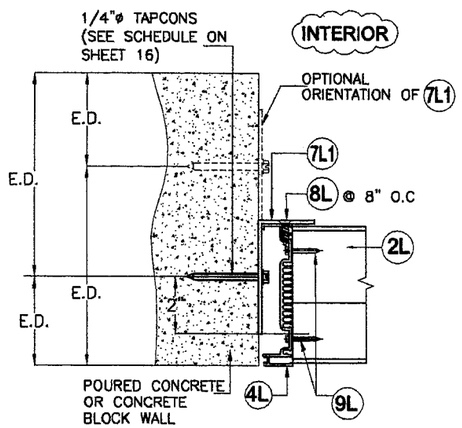

SECTION D'-D'
CONCRETE BLOCK

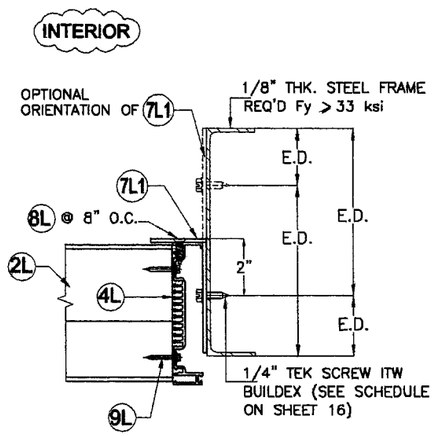

SECTION D'-D'
STEEL

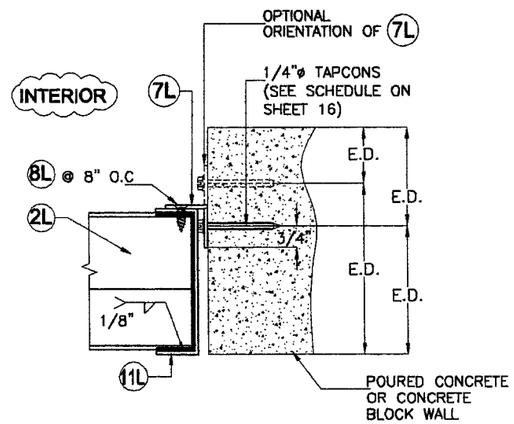

SECTION D1-D1
CONCRETE BLOCK

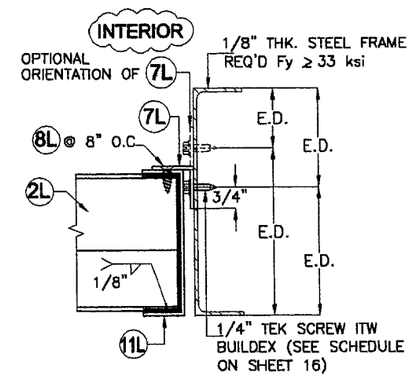

SECTION D1-D1
STEEL

PRODUCT REVISED
As complying with the Florida
Building Code
Acceptance No 09-0922.11
Expiration Date 11/20/2013
By
Miami Dade Product Control
Division

CONNECTION DETAILS

SCALE: 3/16"=1"

F.B.C. (High Velocity Hurricane Zone)

9/10/09

© 2008 TILTECO INC.

TILTECO INC.
TILLIT TESTING & ENGINEERING COMPANY
6355 N.W. 36th. St., Ste. 305, VIRGINIA GARDENS, FL 33166
Phone: (305)871-1530 . Fax: (305)871-1531
e-mail: tilteco@aol.com
EB-0006719
WALTER A. TILLIT Jr. P.E.
FLORIDA Lic. # 44167

SED-5.1 LOUVER SYSTEM WITH OR WITHOUT CD-151 DAMPER ASSEMBLY

UNITED ENERTECH, INC.
3005 SOUTH HICKORY ST.
CHATTANOOGA, TN 37407
PHONE: (423)698-7715 FAX:(423)698-6629

REV. No	DESCRIPTION	DATE	REV. No	DESCRIPTION	DATE
1	OLD 08-004	09/08/09	3		
2			4		

DRAWN BY I.A.

09/08/09 DATE

09-167 DRAWING No

SHEET 11 OF 16

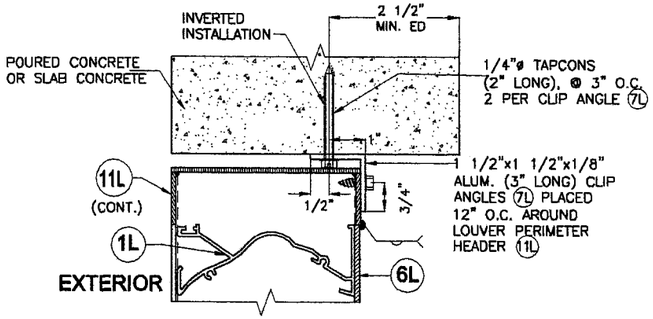

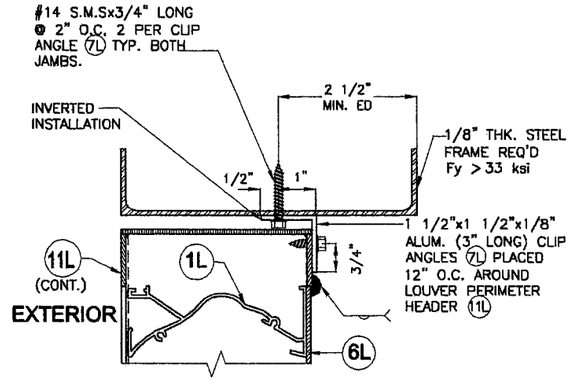

DETAIL - 1

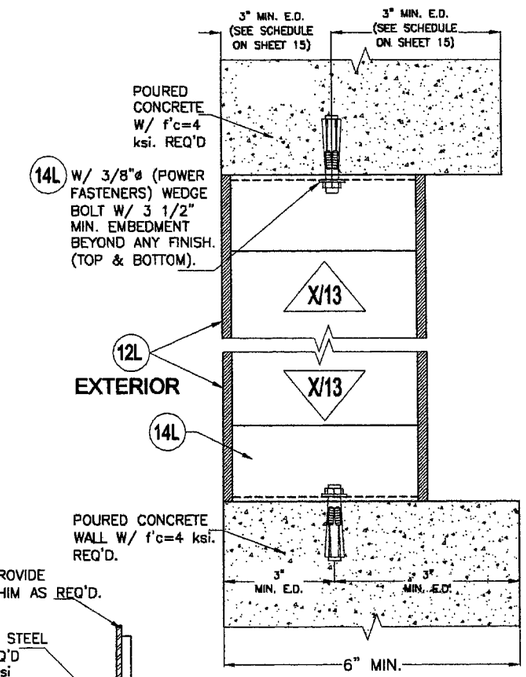

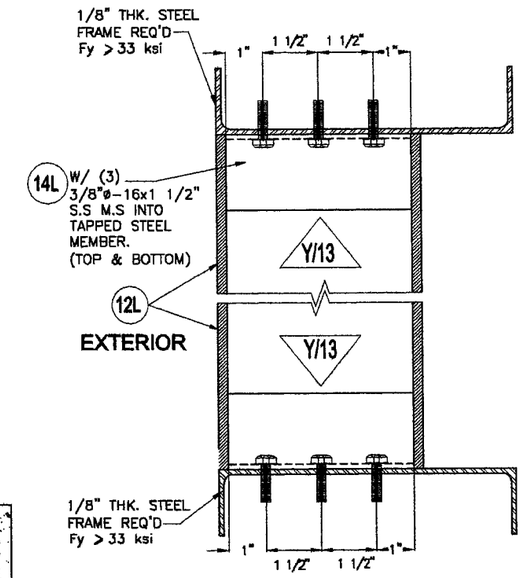

DETAIL - 2

(SEE SHEET 15 FOR MAX. MULLION HEIGHT SCHEDULE GIVEN A MULLION SPACING AND DESIGN LOAD FOR APPLICABILITY OF THIS DETAIL)

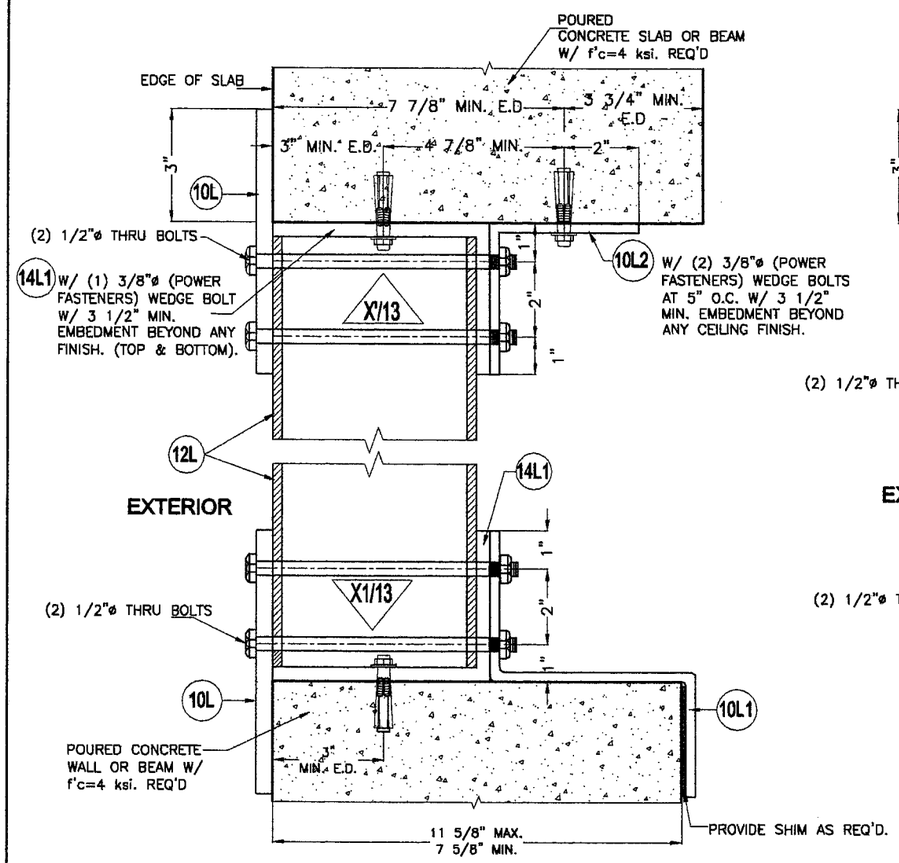

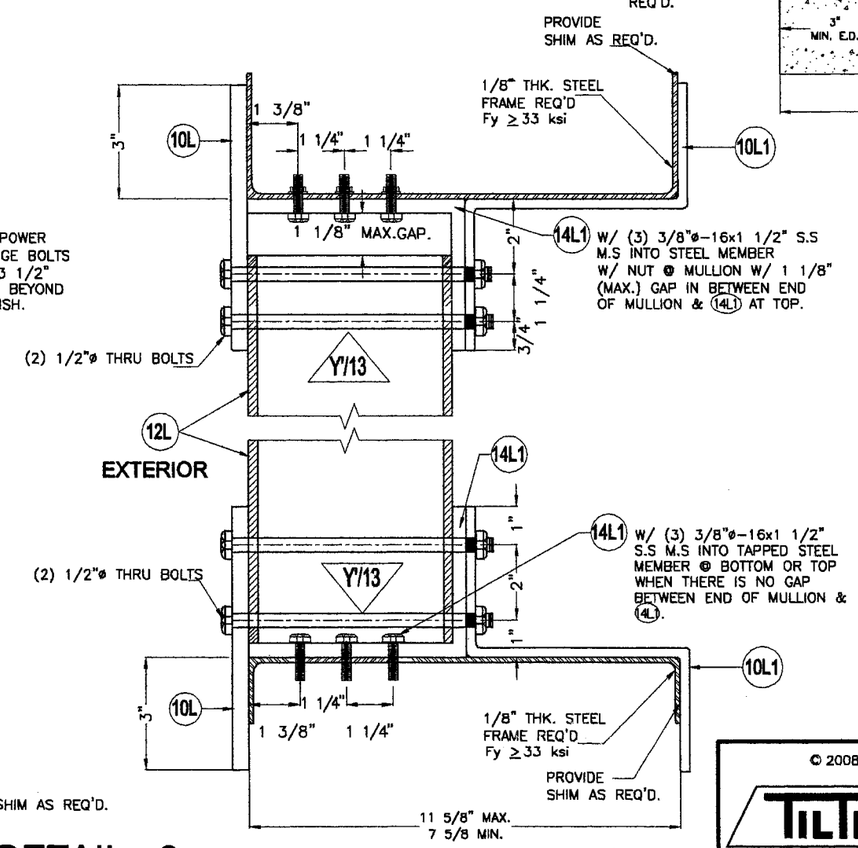

NOTE: TOP & BOTTOM MOUNTINGS MAY BE INTERCHANGEABLE

DETAIL - 3

(SEE SHEET 15 FOR MAX. MULLION HEIGHT SCHEDULE GIVEN A MULLION SPACING AND DESIGN LOAD FOR APPLICABILITY OF THIS DETAIL)

CONNECTION DETAILS

SCALE: 1/4"=1"

PRODUCT REVISED
as complying with the Florida Building Code
Acceptance No 09-0922.11
Expiration Date 11/20/2013
By _____
Miami Dade Product Control Division

F.B.C. (High Velocity Hurricane Zone)

© 2008 TILTECO INC.

TILTECO INC.
TILLIT TESTING & ENGINEERING COMPANY
6355 N.W. 36th. St., Ste. 305, VIRGINIA GARDENS, Fl. 33166
Phone: (305)871-1530 . Fax: (305)871-1531
e-mail: tilteco@aol.com
EB-0006719
WALTER A. TILLIT Jr. P.E.
FLORIDA Lic. # 44167

SED-5.1 LOUVER SYSTEM WITH OR WITHOUT CD-151 DAMPER ASSEMBLY

UNITED ENERTECH, INC.
3005 SOUTH HICKORY ST.
CHATTANOOGA, TN 37407
PHONE: (423)698-7715 FAX:(423)698-6629

REV. No	DESCRIPTION	DATE	REV. No	DESCRIPTION	DATE
1	OLD 08-004	09/08/09	3		
2	DETAIL 2 & 3 AT CONCRETE	09/09/09	4		

DRAWN BY I.A.
09/08/09 DATE
09-167 DRAWING No
SHEET 12 OF 16

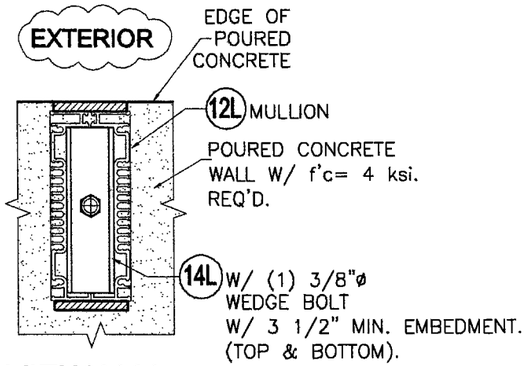

VIEW X-X
CONCRETE
SCALE: 1/4"=1"

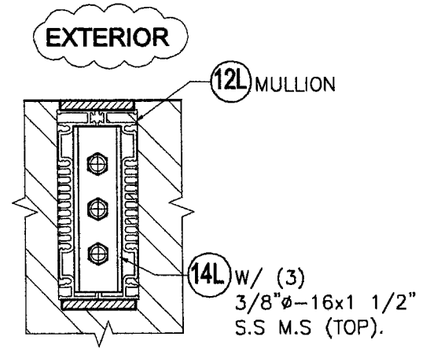

VIEW Y-Y
STEEL
SCALE: 1/4"=1"

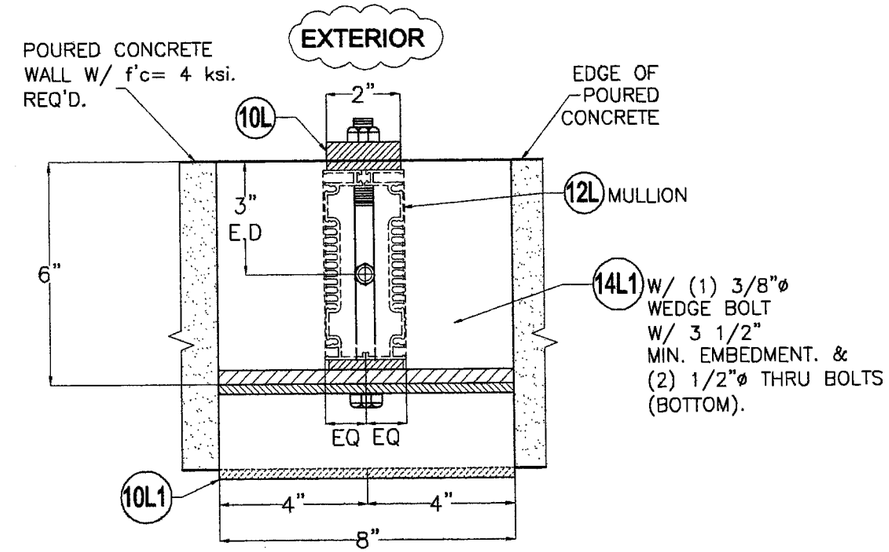

VIEW X1-X1
CONCRETE
SCALE: 1/4"=1"

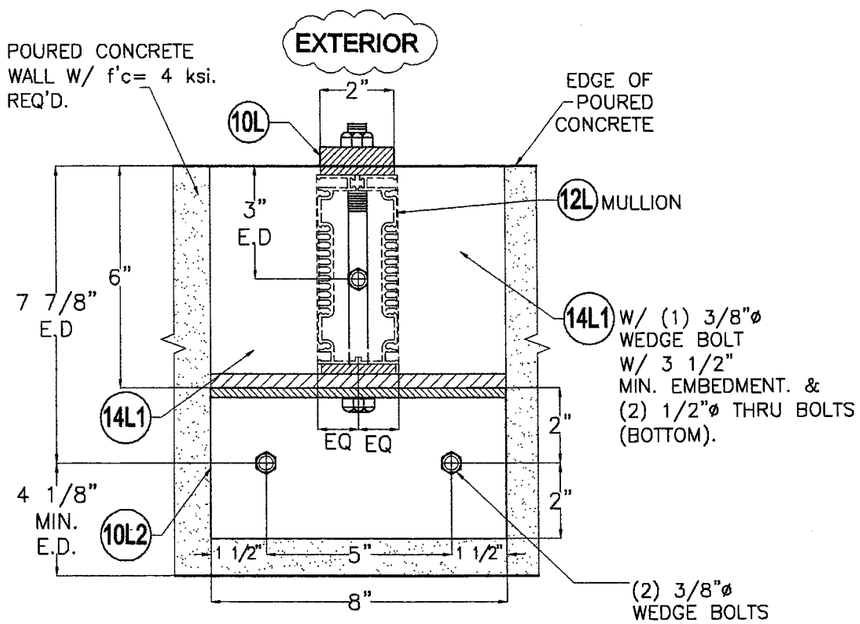

VIEW X'-X'
CONCRETE
SCALE: 1/4"=1"

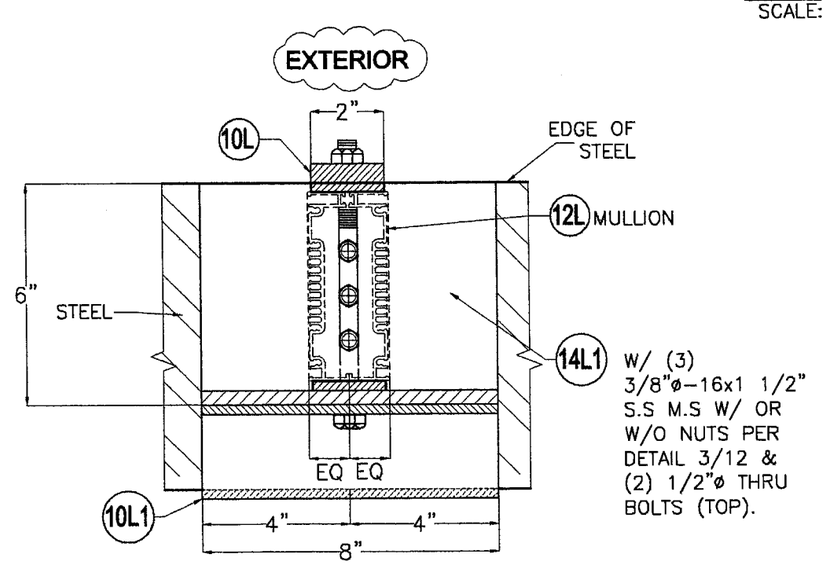

VIEW Y'-Y'
STEEL
SCALE: 1/4"=1"

PRODUCT REVISED
as complying with the Florida Building Code
Acceptance No 09-0922.11
Expiration Date 11/20/2013
By
Miami Dade Product Control Division

F.B.C. (High Velocity Hurricane Zone)

© 2008 TILTECO INC.

TILTECO INC.
TILLIT TESTING & ENGINEERING COMPANY
6355 N.W. 36th. St., Ste. 305, VIRGINIA GARDENS, Fl. 33166
Phone: (305)871-1530 . Fax: (305)871-1531
e-mail: tilteco@aol.com
EB-0006719
WALTER A. TILLIT Jr. P.E.
FLORIDA Lic. # 44167

09/10/09

SED-5.1 LOUVER SYSTEM WITH OR WITHOUT CD-151 DAMPER ASSEMBLY

UNITED ENERTECH, INC.
3005 SOUTH HICKORY ST.
CHATTANOOGA, TN 37407
PHONE: (423)698-7715 FAX:(423)698-6629

REV. No	DESCRIPTION	DATE	REV. No	DESCRIPTION	DATE
1	OLD 08-004	09/08/09	3		
2	VIEW X-X, X1-X1 & X'-X' @ CONCRETE	09/09/09	4		

DRAWN BY I.A.
09/08/09 DATE
09-167 DRAWING No
SHEET 13 OF 16

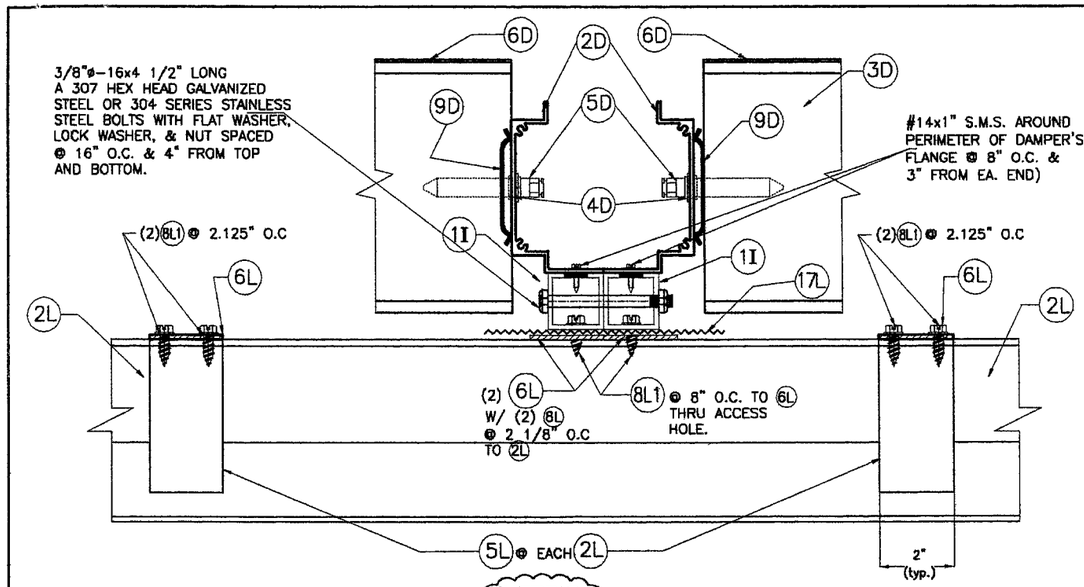

EXTERIOR

SECTION "C-C"

SCALE: 3/16"=1"

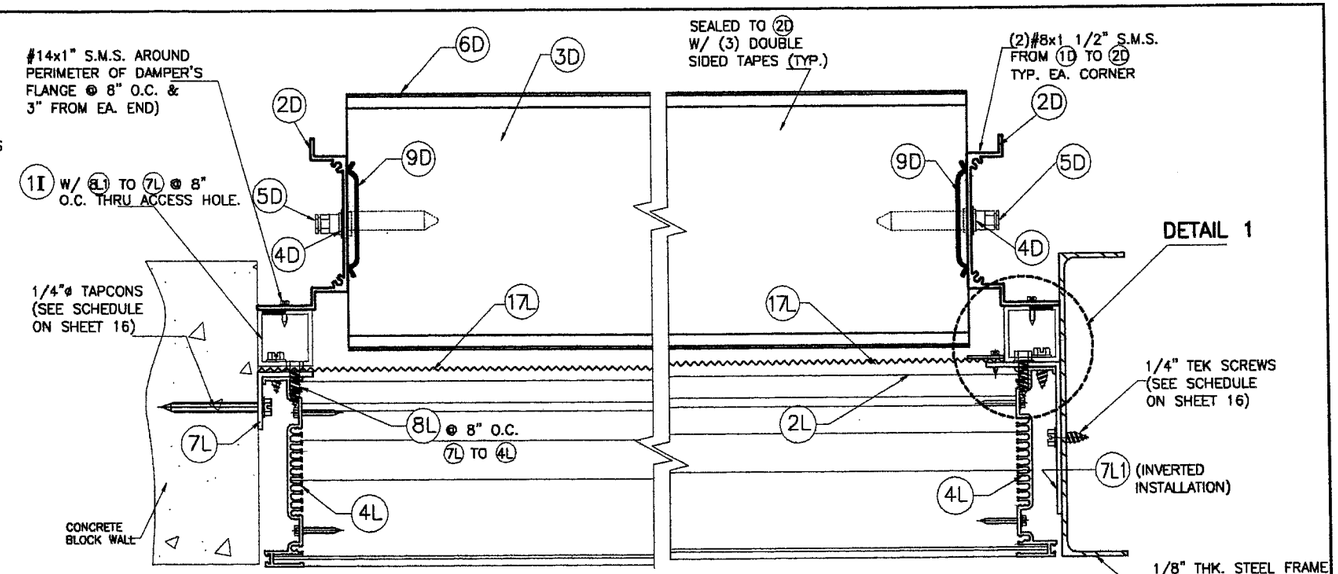

SECTION D-D

SCALE: 3/16"=1"

EXTERIOR

SECTION D'-D'

SCALE: 3/16"=1"

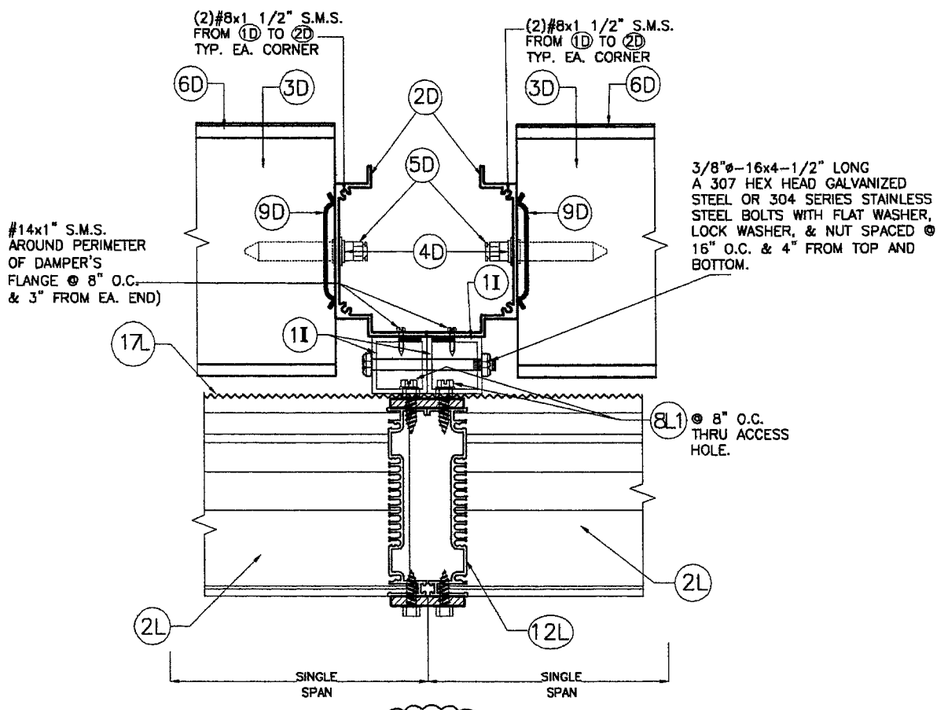

EXTERIOR

SECTION B-B

@ MULLION 12L

SCALE: 3/16"=1"

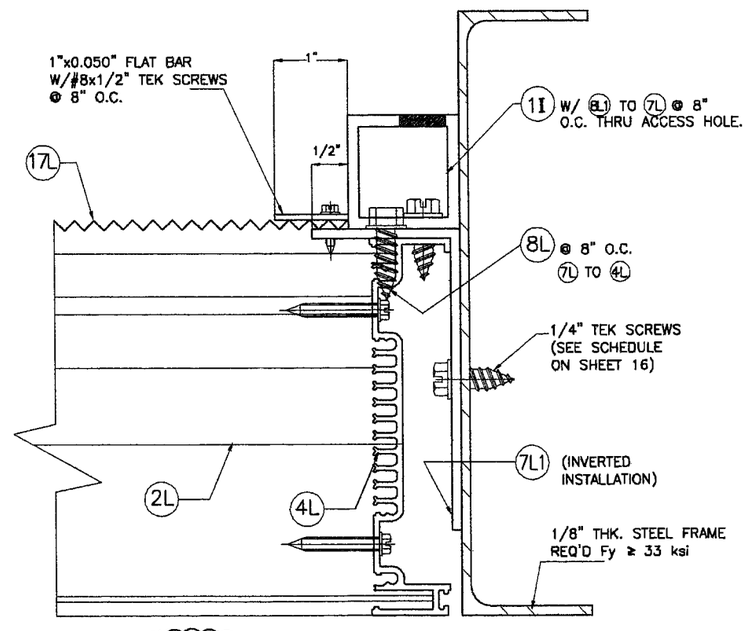

EXTERIOR

DETAIL 1 (PLAN)

1ST LOUVER BLANK-OFF LOCATION

SCALE: 3/8"=1"

9/10/09

PRODUCT REVISED
as complying with the Florida Building Code
Acceptance No 09-0922.11
Expiration Date 11/20/2013
By
Miami/Dade Product Control Division

F.B.C. (High Velocity Hurricane Zone)

© 2008 TILTECO INC.

TILTECO INC.
TILLIT TESTING & ENGINEERING COMPANY
6355 N.W. 36th. St., Ste. 305, VIRGINIA GARDENS, Fl. 33166
Phone: (305)871-1530 . Fax: (305)871-1531
e-mail: tilteco@aol.com
EB-0006719
WALTER A. TILLIT Jr. P.E.
FLORIDA Lic. # 44167

SED-5.1 LOUVER SYSTEM WITH OR WITHOUT CD-151 DAMPER ASSEMBLY

UNITED ENERTECH, INC.
3005 SOUTH HICKORY ST.
CHATTANOOGA, TN 37407
PHONE: (423)698-7715 FAX:(423)698-6629

REV. No	DESCRIPTION	DATE	REV. No	DESCRIPTION	DATE
1	OLD 08-004	09/08/09	3		
2			4		

DRAWN BY I.A.
09/08/09 DATE
09-167 DRAWING No
SHEET 14 OF 16

MAXIMUM LOUVER SYSTEM HEIGHT (ft) SCHEDULE FOR A GIVEN DESIGN WIND LOAD (psf) AND A (12L) MULLION SPACING (ft), APPLICABLE TO MULLION CONNECTION TO CONCRETE OR STEEL TOP AND BOTTOM COVERED BY DETAIL 2, SHEET 12 W/ ED. = 3" (FOR CONCRETE W/ MIN. f'c = 4 ksi.)

		Concrete	Steel			Concrete	Steel
40	48	10'- 0"	10'- 0"	100	48	4'-11"	6'-10"
	60	9'-10"	10'- 0"		60	3'-11"	5'- 5"
	72	8'- 3"	10'- 0"		72	3'- 3"	4'- 7"
45	48	10'- 0"	10'- 0"	105	48	4'- 8"	6'- 6"
	60	8'- 9"	10'- 0"		60	3'- 9"	5'- 2"
	72	7'- 4"	10'- 0"		72	3'- 2"	4'- 4"
50	48	9'-10"	10'- 0"	110	48	4'- 6"	6'- 2"
	60	7'-11"	10'- 0"		60	3'- 7"	4'-12"
	72	6'- 7"	9'- 1"		72	2'-12"	4'- 2"
55	48	8'-12"	10'- 0"	115	48	4'- 3"	5'-11"
	60	7'- 2"	9'-11"		60	3'- 5"	4'- 9"
	72	5'-12"	8'- 3"		72	2'-10"	3'-11"
60	48	8'- 3"	10'- 0"	120	48	4'- 1"	5'- 8"
	60	6'- 7"	9'- 1"		60	3'- 3"	4'- 7"
	72	5'- 6"	7'- 7"		72	2'- 9"	3'- 9"
65	48	7'- 7"	10'- 0"	125	48	3'-11"	5'- 5"
	60	6'- 1"	8'- 5"		60	3'- 2"	4'- 4"
	72	5'- 1"	6'-12"		72	2'- 8"	3'- 8"
70	48	7'- 1"	9'- 9"	130	48	3'-10"	5'- 3"
	60	5'- 8"	7'-10"		60	3'- 0"	4'- 2"
	72	4'- 8"	6'- 6"		72	2'- 6"	3'- 6"
75	48	6'- 7"	9'- 1"	135	48	3'- 8"	5'- 1"
	60	5'- 3"	7'- 3"		60	2'-11"	4'- 0"
	72	4'- 5"	6'- 1"		72	2'- 5"	3'- 4"
80	48	6'- 2"	8'- 6"	140	48	3'- 6"	4'-10"
	60	4'-11"	6'-10"		60	2'-10"	3'-11"
	72	4'- 1"	5'- 8"		72	2'- 4"	3'- 3"
85	48	5'-10"	8'- 0"	145	48	3'- 5"	4'- 8"
	60	4'- 8"	6'- 5"		60	2'- 9"	3'- 9"
	72	3'-10"	5'- 4"		72	2'- 3"	3'- 2"
90	48	5'- 6"	7'- 7"	150	48	3'- 3"	4'- 7"
	60	4'- 5"	6'- 1"		60	2'- 8"	3'- 8"
	72	3'- 8"	5'- 1"		72	2'- 2"	3'- 0"
95	48	5'- 2"	7'- 2"				
	60	4'- 2"	5'- 9"				
	72	3'- 6"	4'- 9"				

MAXIMUM LOUVER SYSTEM HEIGHT (ft) SCHEDULE FOR A GIVEN DESIGN WIND LOAD (psf) AND A (12L) MULLION SPACING (ft), APPLICABLE TO MULLION CONNECTION TO CONCRETE OR STEEL TOP AND BOTTOM COVERED BY DETAIL 2, SHEET 12 W/ ED. = 4" (FOR CONCRETE W/ MIN. f'c = 4 ksi.)

		Concrete	Steel			Concrete	Steel
40	48	10'- 0"	10'- 0"	100	48	6'-12"	7'- 3"
	60	10'- 0"	10'- 0"		60	5'- 7"	5'-10"
	72	10'- 0"	10'- 0"		72	4'- 8"	4'-10"
45	48	10'- 0"	10'- 0"	105	48	6'- 8"	6'-11"
	60	10'- 0"	10'- 0"		60	5'- 4"	5'- 6"
	72	10'- 0"	10'- 0"		72	4'- 5"	4'- 7"
50	48	10'- 0"	10'- 0"	110	48	6'- 4"	6'- 7"
	60	10'- 0"	10'- 0"		60	5'- 1"	5'- 3"
	72	9'- 4"	9'- 8"		72	4'- 3"	4'- 5"
55	48	10'- 0"	10'- 0"	115	48	6'- 1"	6'- 4"
	60	10'- 0"	10'- 0"		60	4'-10"	5'- 1"
	72	8'- 6"	8'-10"		72	4'- 1"	4'- 3"
60	48	10'- 0"	10'- 0"	120	48	5'-10"	6'- 1"
	60	9'- 4"	9'- 8"		60	4'- 8"	4'-10"
	72	7'- 9"	8'- 1"		72	3'-11"	4'- 0"
65	48	10'- 0"	10'- 0"	125	48	5'- 7"	5'-10"
	60	8'- 7"	8'-11"		60	4'- 6"	4'- 8"
	72	7'- 2"	7'- 5"		72	3'- 9"	3'-10"
70	48	9'-12"	10'- 0"	130	48	5'- 5"	5'- 7"
	60	7'-12"	8'- 4"		60	4'- 4"	4'- 6"
	72	6'- 8"	6'-11"		72	3'- 7"	3'- 9"
75	48	9'- 4"	9'- 8"	135	48	5'- 2"	5'- 5"
	60	7'- 6"	7'- 9"		60	4'- 2"	4'- 4"
	72	6'- 3"	6'- 5"		72	3'- 5"	3'- 7"
80	48	8'- 9"	9'- 1"	140	48	4'-12"	5'- 2"
	60	6'-12"	7'- 3"		60	3'-12"	4'- 2"
	72	5'-10"	6'- 1"		72	3'- 4"	3'- 6"
85	48	8'- 3"	8'- 7"	145	48	4'-10"	5'- 0"
	60	6'- 7"	6'-10"		60	3'-10"	4'- 0"
	72	5'- 6"	5'- 8"		72	3'- 3"	3'- 4"
90	48	7'- 9"	8'- 1"	150	48	4'- 8"	4'-10"
	60	6'- 3"	6'- 5"		60	3'- 9"	3'-10"
	72	5'- 2"	5'- 5"		72	3'- 1"	3'- 3"
95	48	7'- 4"	7'- 8"				
	60	5'-11"	6'- 1"				
	72	4'-11"	5'- 1"				

MAXIMUM LOUVER SYSTEM HEIGHT (ft) SCHEDULE FOR A GIVEN DESIGN WIND LOAD (psf) AND A (12L) MULLION SPACING (ft), APPLICABLE TO MULLION CONNECTION TO CONCRETE OR STEEL TOP AND BOTTOM COVERED BY DETAIL 3, SHEET 12 W/ ED. = 3" (FOR CONCRETE W/ MIN. f'c = 4 ksi.)

40	48	10'- 0"	100	48	9'- 2"
	60	10'- 0"		60	8'- 6"
	72	10'- 0"		72	8'- 0"
45	48	10'- 0"	105	48	9'- 0"
	60	10'- 0"		60	8'- 5"
	72	10'- 0"		72	7'-11"
50	48	10'- 0"	110	48	8'-11"
	60	10'- 0"		60	8'- 3"
	72	10'- 0"		72	7'- 9"
55	48	10'- 0"	115	48	8'- 9"
	60	10'- 0"		60	8'- 2"
	72	9'- 9"		72	7'- 8"
60	48	10'- 0"	120	48	8'- 8"
	60	10'- 0"		60	8'- 0"
	72	9'- 6"		72	7'- 6"
65	48	10'- 0"	125	48	8'- 6"
	60	9'-10"		60	7'-11"
	72	9'- 3"		72	7'- 5"
70	48	10'- 0"	130	48	8'- 5"
	60	9'- 7"		60	7'-10"
	72	9'- 0"		72	7'- 4"
75	48	10'- 0"	135	48	8'- 4"
	60	9'- 4"		60	7'- 8"
	72	8'-10"		72	7'- 3"
80	48	9'-11"	140	48	8'- 2"
	60	9'- 2"		60	7'- 7"
	72	8'- 8"		72	7'- 2"
85	48	9'- 8"	145	48	8'- 1"
	60	8'-12"		60	7'- 6"
	72	8'- 6"		72	7'- 1"
90	48	9'- 6"	150	48	8'- 0"
	60	8'-10"		60	7'- 5"
	72	8'- 4"		72	7'- 0"
95	48	9'- 4"			
	60	8'- 8"			
	72	8'- 2"			

NOTE: TOP & BOTTOM MOUNTINGS AT DETAIL 3 MAY BE INTERCHANGEABLE.

MAXIMUM MULLION (12L) HEIGHT FOR MULTIPLE LOUVER SYSTEM SED 5.1 W/ OR W/O DAMPER FOR A GIVEN DESIGN LOAD, MULLION SPACING AND CONNECTION TYPE FOR CONNECTIONS INTO CONCRETE OR STEEL SUBSTRATES.

PRODUCT REVISED
as complying with the Florida Building Code
Acceptance No 07-0922.11
Expiration Date 11/20/2013
By
Miami Dade Product Control Division

F.B.C. (High Velocity Hurricane Zone)

9/10/09

© 2008 TILTECO INC.

TILTECO INC.
TILLIT TESTING & ENGINEERING COMPANY
6355 N.W. 36th. St., Ste. 305, VIRGINIA GARDENS, Fl. 33166
Phone: (305)871-1530 . Fax: (305)871-1531
e-mail: tilteco@aol.com
EB-0006719
WALTER A. TILLIT Jr. P.E.
FLORIDA Lic. # 44167

SED-5.1 LOUVER SYSTEM WITH OR WITHOUT CD-151 DAMPER ASSEMBLY

UNITED ENERTECH, INC.
3005 SOUTH HICKORY ST.
CHATTANOOGA, TN 37407
PHONE: (423)698-7715 FAX:(423)698-6629

REV. No	DESCRIPTION	DATE	REV. No	DESCRIPTION	DATE
1	OLD 08-004	09/08/09	3		
2	DETAIL 2, ED = 3" AND 4" CONCRETE	09/10/09	4		

DRAWN BY I.A.
09/08/09 DATE
09-167 DRAWING No
SHEET 15 OF 16

ANCHOR SPACING SCHEDULE AT JAMBS, VALID FOR CONNECTION TO CONCRETE, CONCRETE BLOCK & STEEL SUBSTRATES.

ANCHOR SPACING SCHEDULE AT JAMBS W/ 7L (1 1/2"x1 1/2"x1/8" ANGLE)

DESIGN WIND LOAD (psf.)	SINGLE UNIT WIDTH OR MULLION SPACING (S) AT MULTIPLE UNITS	MAX. SPACING (in) TO CONCRETE	MAX. SPACING (in) TO CONCRETE BLOCK	MAX. SPACING (in) TO STEEL
75 OR LESS	48	8" O.C	7 1/2" O.C	8" O.C
	60	8" O.C	6" O.C	8" O.C
	72	8" O.C	5" O.C	8" O.C
> 75 TO 110	48	8" O.C	5" O.C	8" O.C
	60	8" O.C	4" O.C	8" O.C
	72	7" O.C	3" O.C	7 1/2" O.C
> 110 TO 150	48	8" O.C	3 1/2" O.C	8" O.C
	60	6 1/2" O.C	3" O.C	6 1/2" O.C
	72	5" O.C	N/A	5 1/2" O.C

ANCHOR SPACING SCHEDULE AT JAMBS W/ 7L1 (2"x4"x1/8" ANGLE)

DESIGN WIND LOAD (psf.)	SINGLE UNIT WIDTH OR MULLION SPACING (S) AT MULTIPLE UNITS	MAX. SPACING (in) TO CONCRETE	MAX. SPACING (in) TO CONCRETE BLOCK	MAX. SPACING (in) TO STEEL
75 OR LESS	48	8" O.C	8" O.C	8" O.C
	60	8" O.C	8" O.C	8" O.C
	72	8" O.C	8" O.C	8" O.C
> 75 TO 110	48	8" O.C	8" O.C	8" O.C
	60	8" O.C	6 1/2" O.C	8" O.C
	72	8" O.C	5 1/2" O.C	8" O.C
> 110 TO 150	48	8" O.C	6" O.C	8" O.C
	60	8" O.C	5" O.C	8" O.C
	72	7 1/2" O.C	4" O.C	8" O.C

F.B.C. (High Velocity Hurricane Zone)

PRODUCT REVISED
as complying with the Florida Building Code
Acceptance No 09-0922.11
Expiration Date 11/20/2013
By
Miami Dade Product Control Division

9/10/09

© 2008 TILTECO INC.

TILTECO INC.
TILLIT TESTING & ENGINEERING COMPANY
6355 N.W. 36th. St., Ste. 305, VIRGINIA GARDENS, Fl. 33166
Phone: (305)871-1530 . Fax: (305)871-1531
e-mail: tilteco@aol.com
EB-0006719
WALTER A. TILLIT Jr. P.E.
FLORIDA Lic. # 44167

SED-5.1 LOUVER SYSTEM WITH OR WITHOUT CD-151 DAMPER ASSEMBLY

UNITED ENERTECH, INC.
3005 SOUTH HICKORY ST.
CHATTANOOGA, TN 37407
PHONE: (423)698-7715 FAX:(423)698-6629

REV. No	DESCRIPTION	DATE	REV. No	DESCRIPTION	DATE
1	OLD 08-004	09/08/09	3		
2			4		

DRAWN BY I.A.
09/08/09 DATE
09-167 DRAWING No
SHEET 16 OF 16