MIAMI-DADE COUNTY
BUILDING CODE COMPLIANCE OFFICE (BCCO)
PRODUCT CONTROL DIVISION

MIAMI-DADE COUNTY, FLORIDA
METRO-DADE FLAGLER BUILDING
140 WEST FLAGLER STREET, SUITE 1603
MIAMI, FLORIDA 33130-1563
(305) 375-2901 FAX (305) 372-6339
www.miamidade.gov/buildingcode

NOTICE OF ACCEPTANCE (NOA)

Berridge Manufacturing Company
6515 Fratt Road
San Antonio, TX 78218

SCOPE:

This NOA is being issued under the applicable rules and regulations governing the use of construction materials. The documentation submitted has been reviewed by Miami-Dade County Product Control Division and accepted by the Board of Rules and Appeals (BORA) to be used in Miami Dade County and other areas where allowed by the Authority Having Jurisdiction (AHJ).

This NOA shall not be valid after the expiration date stated below. The Miami-Dade County Product Control Division (In Miami Dade County) and/or the AHJ (in areas other than Miami Dade County) reserve the right to have this product or material tested for quality assurance purposes. If this product or material fails to perform in the accepted manner, the manufacturer will incur the expense of such testing and the AHJ may immediately revoke, modify, or suspend the use of such product or material within their jurisdiction. BORA reserves the right to revoke this acceptance, if it is determined by Miami-Dade County Product Control Division that this product or material fails to meet the requirements of the applicable building code.

This product is approved as described herein, and has been designed to comply with the Florida Building Code, including the High Velocity Hurricane Zone.

DESCRIPTION: FW-12 Steel Wall Panel System

APPROVAL DOCUMENT: Engineering Report No. **09-191**, titled "Berridge FW-12 Steel Wall & Soffit Panels", sheets 1 through 9 of 9, dated 02/09/10, prepared by C-Buck Engineering, signed and sealed by James L. Buckner, P.E., bearing the Miami-Dade County Product Control approval stamp with the Notice of Acceptance number and approval date by the Miami-Dade County Product Control Division.

MISSILE IMPACT RATING: Large and Small Missile Impact Resistant

LABELING: Each panel shall bear one of the following permanent labels:

Berridge Manufacturing Co.	Berridge Manufacturing Co.	Berridge Manufacturing Co.
1720 Maury Street	6515 Fratt Road	2201 Rudeloff Road
Houston, TX 77026	San Antonio, TX 78218	Seguin, TX 78155

and the statement: "Miami-Dade County Product Control Approved".

RENEWAL of this NOA shall be considered after a renewal application has been filed and there has been no change in the applicable building code negatively affecting the performance of this product.

TERMINATION of this NOA will occur after the expiration date or if there has been a revision or change in the materials, use, and/or manufacture of the product or process. Misuse of this NOA as an endorsement of any product, for sales, advertising or any other purposes shall automatically terminate this NOA. Failure to comply with any section of this NOA shall be cause for termination and removal of NOA.

ADVERTISEMENT: The NOA number preceded by the words Miami-Dade County, Florida, and followed by the expiration date may be displayed in advertising literature. If any portion of the NOA is displayed, then it shall be done in its entirety.

INSPECTION: A copy of this entire NOA shall be provided to the user by the manufacturer or its distributors and shall be available for inspection at the job site at the request of the Building Official.

This NOA consists of this page 1 and evidence page E-1, as well as approval document mentioned above.

The submitted documentation was reviewed by **Carlos M. Utrera, P.E.**

MIAMI-DADE COUNTY APPROVED

03/01/10

NOTICE OF ACCEPTANCE: EVIDENCE SUBMITTED

A. DRAWINGS

1. Engineering Report No. **09-191**, titled "Berridge FW-12 Steel Wall & Soffit Panels", sheets 1 through 9 of 9, dated 02/09/10, prepared by C-Buck Engineering, signed and sealed by James L. Buckner, P.E.

B. TESTS

1. Test reports on 1) Uniform Static Air Pressure Test, Loading per FBC TAS 202-94
   2) Large Missile Impact Test per FBC, TAS 201-94
   3) Cyclic Wind Pressure Loading per FBC, TAS 203-94
   4) Tensile Test per ASTM E8-04

   along with marked-up drawings and installation diagram of three FW-12 Steel Siding/Soffit Panels, prepared by Architectural Testing, Inc., Test Report No. **78918.03-801-18**, dated 08/20/09, signed and sealed by Joseph A. Reed, P.E.

C. CALCULATIONS

1. Fastener evaluation calculations, prepared by C-Buck Engineering, dated 10/22/09, signed and sealed by James L. Buckner, P.E.

D. QUALITY ASSURANCE

1. Miami Dade Building Code Compliance Office (BCCO)

E. MATERIAL CERTIFICATIONS

1. None.

F. STATEMENTS

1. Statement letter of code conformance issued by C-Buck Engineering, dated 10/20/09, signed and sealed by James L. Buckner, P.E.
2. Statement letter of no financial interest issued by C-Buck Engineering, dated 10/23/09, signed and sealed by James L. Buckner, P.E.

03/01/10

Carlos M. Utrera, P.E.
Product Control Examiner
NOA No. 09-1028.05
Expiration Date: March 24, 2015
Approval Date: March 24, 2010

Engineering Report & Drawings

of

Berridge Manufacturing Company

"FW-12"

Wall & Soffit Panel Assembly

for

Miami-Dade Notice of Acceptance (N.O.A.)

Category: **Panels**
Sub - Category: **Wall**

Product: "FW-12" Structural Steel Wall Panel
Material: Steel
Panel Thickness: 24 gauge

Prepared by:
James L. Buckner, P.E.
Florida Professional Engineer # 31242
Project Manager: Diana Galloway

Report No.: 09-191-FW12-ENGREPORT
Date: 2/09/10

Contents:

Cover Page	Page 1
Product Details	Page 2
Performance/Installation	Page 3
Limitations/Reference Data	Page 4
Product Components	Page 5
Product Drawings & Details	Page 6-9

Approved as complying with the Florida Building Code
Date 03/24/2010
NOA# 09-1028.05
Miami Dade Product Control Division
By

JAMES L. BUCKNER, P.E. FLORIDA P.E. #31242 2/15/10	BERRIDGE "FW-12" STEEL WALL & SOFFIT PANEL ENGINEERING REPORT		
	CBUCK Engineering CBUCK, Inc. COA #8064 1334 S. Killian Dr., Ste 4 W. Palm Beach, FL 33403 (561) 491-9927	MANUFACTURER: Berridge Manufacturing Company 6515 Fratt Rd. San Antonio, TX 78218	DATE: 2/09/10 PAGE #: 1 OF 9 PROJECT #: 09-191 DRAWN BY: DG REVISIONS:

1.0 Product:

1.1	**Manufacturer:**	Berridge Manufacturing Company
1.2	**Product Name:**	"FW-12" Structural Steel Wall & Soffit Panel
1.3	**Category:**	Panels
1.4	**Subcategory:**	Wall

2.0 Evaluation Scope:

2.1 **Evaluation Criteria:**

2.1.1 Florida Building Code (FBC) 2007

2.1.1.1 Code Section: High Velocity Hurricane Zone (HVHZ)

2.1.1.2 Miami-Dade Building Code Compliance Office (BCCO) Checklist # 0250

2.2 **Properties Evaluated:**

2.2.1 Wind Resistance Properties

2.2.1.1 Uniform Static Air Pressure
(Structural only. This panel system has not been tested for water & air infiltration.)

2.2.1.2 Cyclic Wind Pressure

2.2.1.3 Large Missile Impact

2.2.2 Material Properties

2.2.2.1 Tensile strength

2.3 **Limits of Evaluation:**
This product is limited to compliance with the criteria in section 2.1 and properties in section 2.2 of this report.

3.0 Evaluated Uses:
"FW-12" Wall Panels are evaluated for use as exterior wall or soffit panels.

4.0 Product Description:

4.1 **General:**
"FW-12" panels are structural steel wall panels with concealed fasteners, a flush seam appearance and an interlocking seam edge. Panels are installed vertically to horizontal steel supports with screws.

4.2 **Product Dimensions:**

4.2.1	Thickness:	24 gauge
4.2.2	Coverage Width:	12 in.
4.2.3	Rib height:	1-1/2 in.
4.2.4	Length:	Roll formed, continuous up to 40 ft.

Approved as complying with the Florida Building Code
Date 03/24/2010
NOA# 09-1028.05
Miami Dade Product Control Division
By

5.0 Support:

The Support assembly is designed by others and shall have the following minimum Characteristics:

5.1	Type:	Girts
5.2	Material:	Steel
5.3	Thickness:	16 Gauge min.
5.4	Yield Strength:	50 ksi
5.5	Girt Size:	2" min. flange bearing

6.0 Performance:

6.1 **Wind Resistance:**

Design Pressure: **Positive** **+ 110 psf**
Negative **- 110 psf**

Based on the following conditions:

6.1.1 **Support:**

6.1.1.1 Type: Horizontal Girts
6.1.1.2 Shape: Cee
6.1.1.3 Dimensions: 4" x 2-1/2"
6.1.1.4 Material: Steel
6.1.1.5 Thickness: 16 Ga.
6.1.1.6 Yield Strength: 50 ksi
6.1.1.7 Spacing: 24 in. o.c
6.1.1.8 Span Condition: 4 or more

6.1.2 Attachment of "FW-12" panel per Section 7.0

6.2 **Uniform Static Air Infiltration:**
Standard TAS 202
Results: Per Section 6.1

6.3 **Cyclic Wind Loading:**
Standard: TAS 203
Results: Passed

6.4 **Impact Rating:** Large Missile Impact
Standard: TAS 201
Results: Passed

Approved as complying with the Florida Building Code
Date 03/24/2010
NOA# 09-1028.05
Miami Dade Product Control Division
By

7.0 Installation:

Install per the following:

"FW-12" wall panel to supports:

Two screws per Section 12.2.1, located at the vertical joints to the horizontal supports (every 24 in.) and at every panel end (every 12 in.) Fasteners shall penetrate the steel supports by ½ in. minimum.

"FW-12" panel-to-panel stitching:

One screw per Section 12.2.2, spaced 12 in. o.c. along panel seams (and within 3 in. from ends).

See Drawings on pages 6 through 9 of this report. Refer to manufacturer's installation instructions as a supplemental guide for attachment.

8.0 Limitations of Use:

8.1 Performance data is based on minimum characteristics per Section 6.1.1.

8.2 Design of support system is outside the scope of this report. Support shall be structural framing members complying with the Miami-Dade (Florida High velocity zone) code and shall be designed by others.

8.3 Panel shall not be used as axial load bearing components and shall not be intended / designed to act as a diaphragm.

8.4 This evaluation is limited to the wall panel, wall panel fasteners and its attachment to the supports. The structural properties and design of all other items are outside the scope of this evaluation and should be submitted to the permitting jurisdiction for review and approval.

9.0 Code Compliance

9.1 Product meets the High Velocity Hurricane Zone (HVHZ) Requirements of the Florida Building Code (FBC) 2007 for the properties evaluated.

10.0 Identification:

10.1 Each Panel shall bear a permanent one of the following permanent labels:

Berridge Manufacturing Co.	Berridge Manufacturing Co.	Berridge Manufacturing Co.
1720 Maury Street	6515 Fratt Road	2201 Rudeloff Road
Houston, TX 77026	San Antonio, TX 78218	Seguin, TX 78155

And the Statement: "Miami-Dade County Product Control Approved".

11.0 Referenced Data:

11.1 Test Report on:
TAS 201-94, Impact Test Procedures
TAS 202-94, Criteria for Testing Impact and Non-impact Resistant Building Envelope Components Using Uniform Static Air Pressure
TAS 203-94, Criteria for Testing Products Subject to Cyclic Wind Pressure Loading
ASTM E8-08, Standard Test Methods for Tensile Testing of Metallic Materials
For Model: "FW-12"
By: Architectural Testing, Inc., Southlake, TX
Report No.: 78918-03-801-18, Dated: 8/20/09, Signed & Sealed 8/24/09 by Joseph A. Reed, P.E.

Approved as complying with the Florida Building Code
Date 03/29/2010
NOA# 09-1028.05
Miami Dade Product Control Division
By

12.0 Product Components:

12.1 "FW-12":

12.1.1 Dimensions:

12.1.1.1	Panel Gauge:	24 gauge
12.1.1.2	Coverage Width:	12 in.
12.1.1.3	Rib height:	1-1/2 in.
12.1.1.4	Length:	Roll formed, continuous up to 40 ft.

12.1.2 Properties:

12.1.2.1	Material	Steel
12.1.2.2	Yield Strength:	62 ksi
12.1.2.3	Thickness:	24 Gauge (t = 0.023"painted, as tested)
12.1.2.4	Corrosion Resistance/Standards:	
12.1.2.4.1	Galvanized G90 per ASTM A924	
12.1.2.4.2	Galvalume per ASTM A792 AZ 55 with Kynar 500	

12.2 Fasteners:

12.2.1 Panel to Support Fasteners

12.2.1.1	Manufacturer:	Generic
12.2.1.2	Type:	Self Drilling Sheet Metal Screw
12.2.1.3	Size:	#12 x 3/4"
12.2.1.4	Corrosion Resistance:	Zinc Plated

12.2.2 Panel-to-Panel Stitch Fasteners

12.2.2.1	Manufacturer:	Generic
12.2.2.2	Type:	Self Drilling Sheet Metal Screw
12.2.2.3	Size:	#14 x 7/8"
12.2.2.4	Corrosion Resistance:	Zinc Plated

Approved as complying with the Florida Building Code
Date 03/24/2010
NOA# 09-1028.05
Miami Dade Product Control Division
By

BERRIDGE MANUFACTURING COMPANY

"FW-12" DRAWINGS

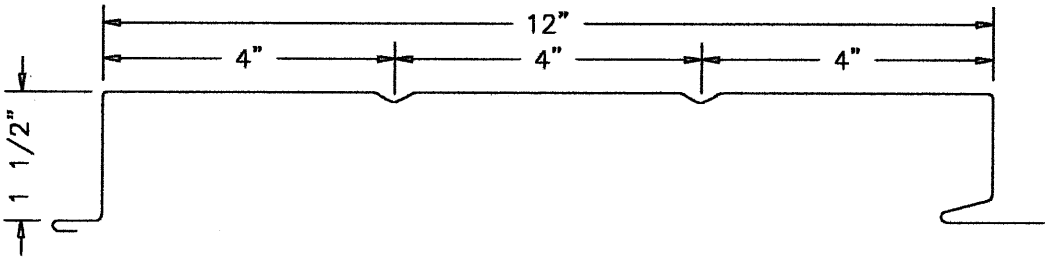

TYPICAL PANEL PROFILE

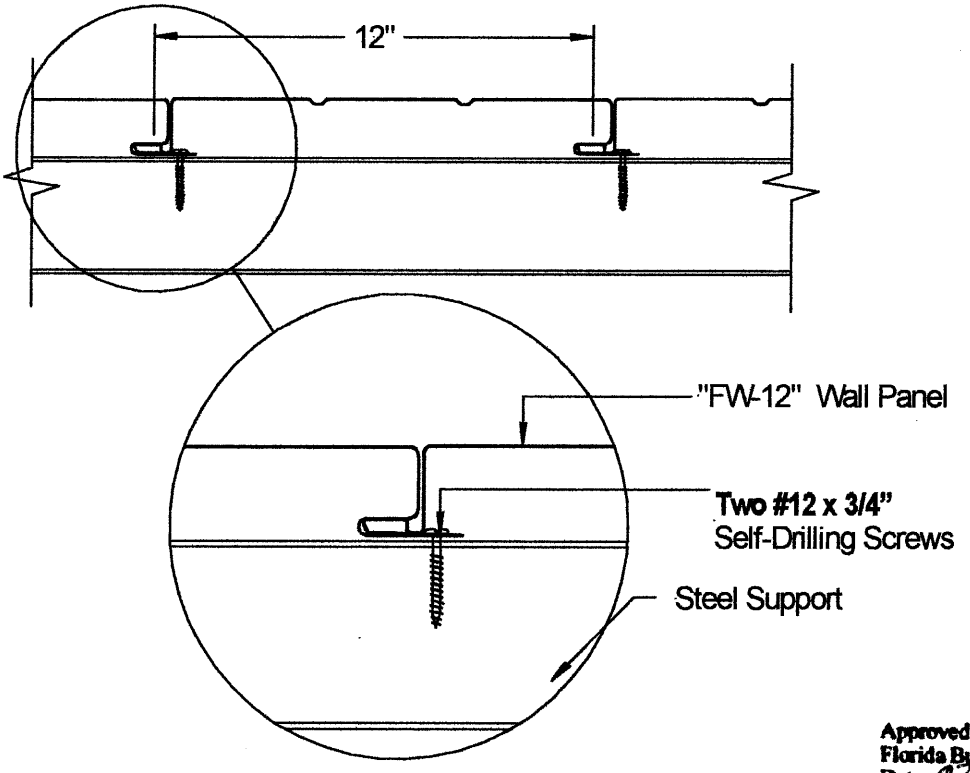

TYPICAL PANEL ASSEMBLY
SECTION VIEW

Approved as complying with the Florida Building Code
Date 03/24/2010
NOA# 09-1028.05
Miami Dade Product Control Division
By

JAMES L. BUCKNER, P.E. FLORIDA P.E. #31242 2/15/10	BERRIDGE "FW-12" STEEL WALL & SOFFIT PANEL PROFILE & TYPICAL ASSEMBLY DETAILS		
	CBUCK Engineering COA #8064 CBUCK, Inc. 1334 S. Killian Dr., Ste 4 W. Palm Beach, FL 33403 (561) 491-9927	MANUFACTURER: Berridge Manufacturing Company 6515 Fratt Rd. San Antonio, TX 78218	DATE: 2/09/10 PAGE #: 6 OF 9 PROJECT #: 09-191 DRAWN BY: DG REVISIONS:

BERRIDGE MANUFACTURING COMPANY

"FW-12" DRAWINGS

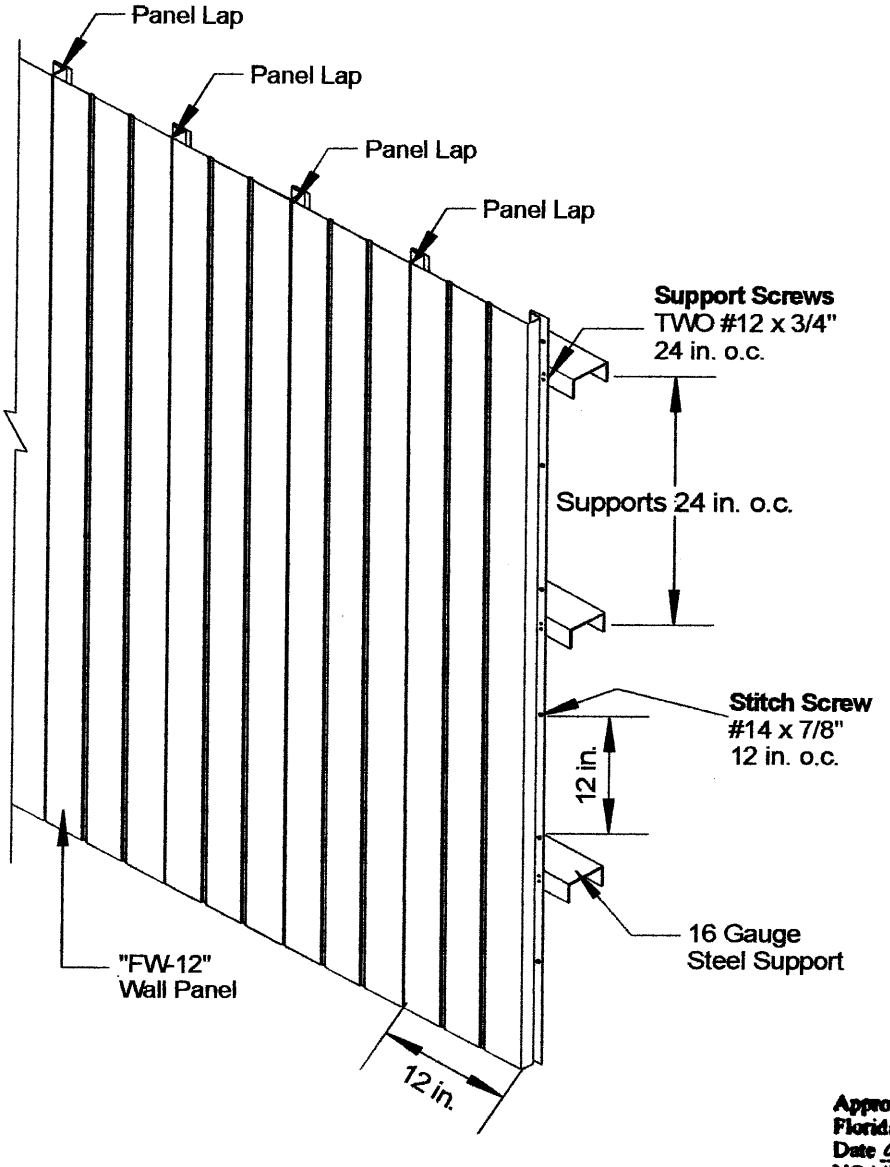

TYPICAL ELEVATION VIEW
OUTSIDE OF WALL ASSEMBLY

Approved as complying with the Florida Building Code
Date 03/24/2010
NOA# 09-1028.05
Miami Dade Product Control Division
By

JAMES L. BUCKNER, P.E. FLORIDA P.E. #31242 2/15/10	BERRIDGE "FW-12" STEEL WALL & SOFFIT PANEL TYPICAL ELEVATION VIEW		
	CBUCK Engineering CBUCK, Inc. COA #8064 1334 S. Killian Dr., Ste 4 W. Palm Beach, FL 33403 (561) 491-9927	MANUFACTURER: Berridge Manufacturing Company 6515 Fratt Rd. San Antonio, TX 78218	DATE: 2/09/10 PAGE #: 7 OF 9 PROJECT #: 09-191 DRAWN BY: DG REVISIONS:

BERRIDGE MANUFACTURING COMPANY

"FW-12" DRAWINGS

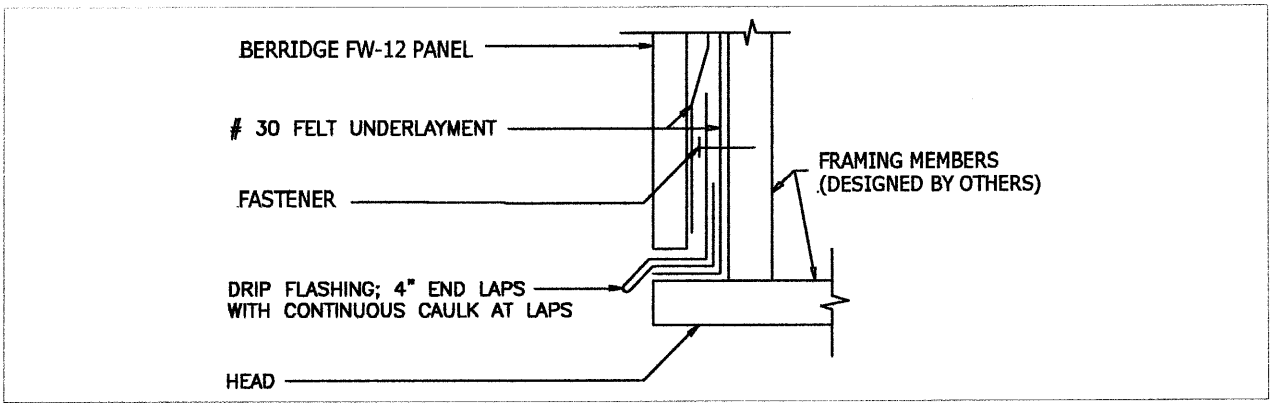

TYPICAL HEADER DETAIL

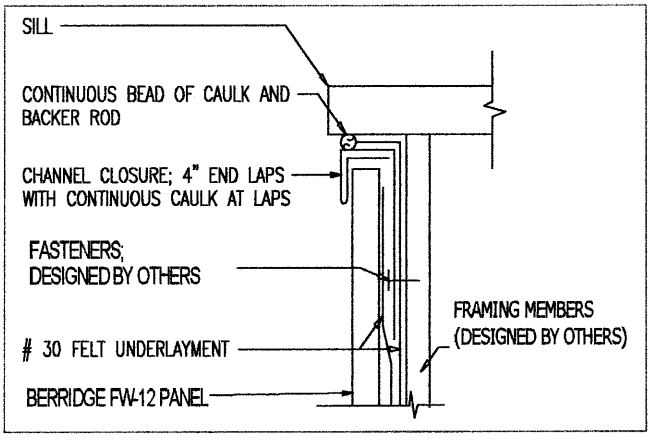

TYPICAL SILL DETAIL

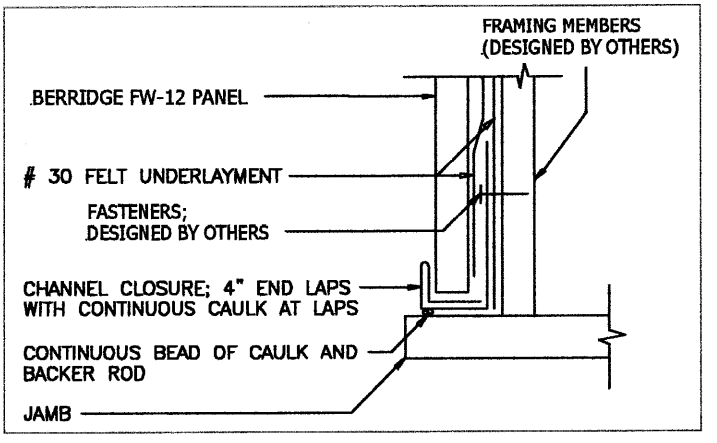

TYPICAL JAMB DETAIL

Approved as complying with the Florida Building Code
Date 03/24/2010
NOA# 09-1028.05
Miami Dade Product Control Division
By _____

NOTES:
1. SUPPLEMENTAL ATTACHMENT DETAILS DESIGNED BY OTHERS
2. REFER TO MANUFACTURER FOR FASTENER, CAULKING SPECIFICATIONS & SUPPLEMENTAL ATTACHMENT DETAILS

JAMES L. BUCKNER, P.E. FLORIDA P.E. #31242 2/15/10	BERRIDGE "FW-12" STEEL WALL & SOFFIT PANEL (SUPPLEMENTAL DETAILS) TYPICAL INSIDE & OUTSIDE CORNER DETAILS		
	CBUCK Engineering COA #8064 CBUCK, Inc. 1334 S. Killian Dr., Ste 4 W. Palm Beach, FL 33403 (561) 491-9927	MANUFACTURER: Berridge Manufacturing Company 6515 Fratt Rd. San Antonio, TX 78218	DATE: 2/09/10 PAGE #: 8 OF 9 PROJECT #: 09-191 DRAWN BY: DG REVISIONS:

BERRIDGE MANUFACTURING COMPANY

"FW-12" DRAWINGS

Approved as complying with the Florida Building Code
Date 03/24/2010
NOA# 09-1028.05
Miami Dade Product Control Division
By

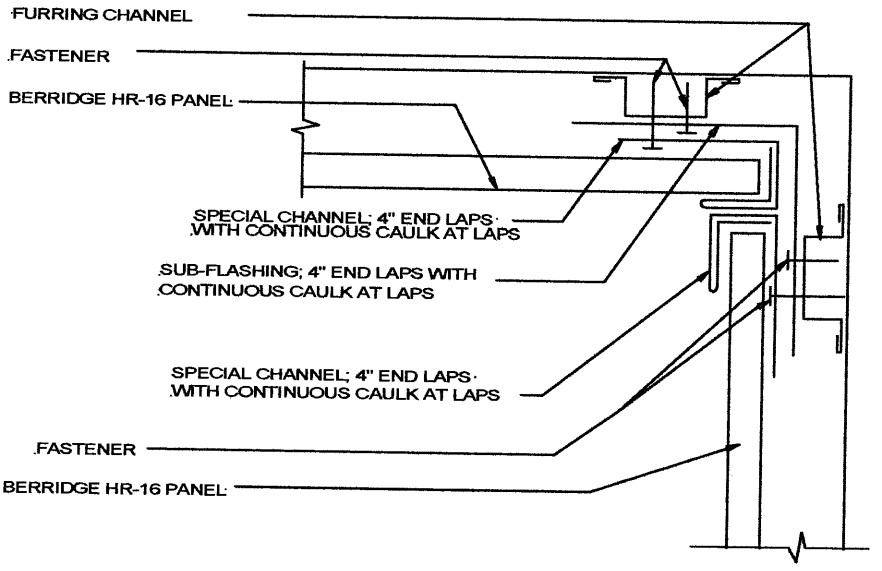

TYPICAL INSIDE CORNER DETAIL

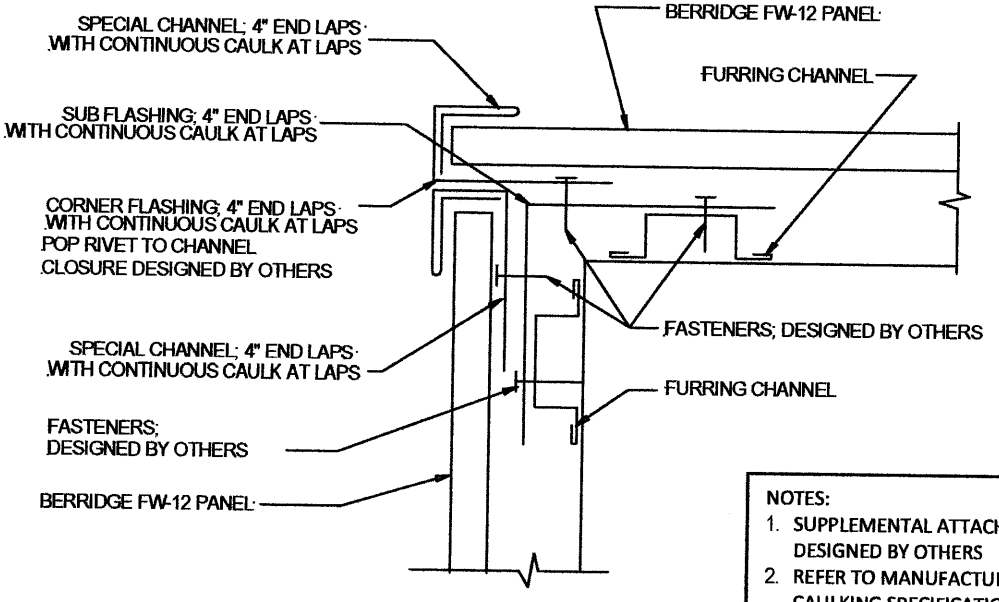

TYPICAL OUTSIDE CORNER DETAIL

NOTES:
1. SUPPLEMENTAL ATTACHMENT DETAILS DESIGNED BY OTHERS
2. REFER TO MANUFACTURER FOR FASTENER, CAULKING SPECIFICATIONS & SUPPLEMENTAL ATTACHMENT DETAILS

JAMES L. BUCKNER, P.E. FLORIDA P.E. #31242 2/15/10	BERRIDGE "FW-12" STEEL WALL & SOFFIT PANEL (SUPPLEMENTAL DETAILS) TYPICAL INSIDE & OUTSIDE CORNER DETAILS		
	CBUCK Engineering CBUCK, Inc. COA #8064 1334 S. Killian Dr., Ste 4 W. Palm Beach, FL 33403 (561) 491-9927	MANUFACTURER: Berridge Manufacturing Company 6515 Fratt Rd. San Antonio, TX 78218	DATE: 2/09/10 PAGE #: 9 OF 9 PROJECT #: 09-191 DRAWN BY: DG REVISIONS: