MIAMI-DADE COUNTY
BUILDING CODE COMPLIANCE OFFICE (BCCO)
PRODUCT CONTROL DIVISION

MIAMI–DADE COUNTY, FLORIDA
METRO–DADE FLAGLER BUILDING
140 WEST FLAGLER STREET, SUITE 1107
MIAMI, FLORIDA 33130–1563
(305) 375–2902 FAX (305) 372–6339
www.miamidade.GOV/buildingcode

# NOTICE OF ACCEPTANCE (NOA)

**PGT Industries**
**1070 Technology Drive**
**Nokomis, FL 34275**

**SCOPE:**

This NOA is being issued under the applicable rules and regulations governing the use of construction materials. The documentation submitted has been reviewed by Miami–Dade County Product Control Division and accepted by the Board of Rules and Appeals (BORA) to be used in Miami–Dade County and other areas where allowed by the Authority Having Jurisdiction (AHJ).

This NOA shall not be valid after the expiration date stated below. The Miami–Dade County Product Control Division (In Miami–Dade County) and/or the AHJ (in areas other than Miami–Dade County) reserve the right to have this product or material tested for quality assurance purposes. If this product or material fails to perform in the accepted manner, the manufacturer will incur the expense of such testing and the AHJ may immediately revoke, modify, or suspend the use of such product or material within their jurisdiction. BORA reserves the right to revoke this acceptance, if it is determined by Miami–Dade County Product Control Division that this product or material fails to meet the requirements of the applicable building code.

This product is approved as described herein, and has been designed to comply with the Florida Building Code, including the High Velocity Hurricane Zone.

**DESCRIPTION: Series "PW 2720/ 2820" White PVC Fixed Window – L.M.I.**

**APPROVAL DOCUMENT:** Drawing No. **08–00885**, titled "Series PW 2720 PVC Fixed Window Impact & PW 2820 PVC Fixed Window Impact", sheets 1 through 7 of 7, dated 10/21/09 with revision "**B**" dated 07/08/10, prepared by manufacture, signed and sealed by Luis R. Lomas, P. E., bearing the Miami–Dade County Product Control Approval stamp with the Notice of Acceptance number and Approval date by the Miami–Dade County Product Control Division.

**MISSILE IMPACT RATING: Large and Small Missile Impact Resistant.**

**LABELING:** Each unit shall bear a permanent label with the manufacturer's name or logo, city, state and following statement: "Miami–Dade County Product Control Approved", unless otherwise noted herein.

**RENEWAL** of this NOA shall be considered after a renewal application has been filed and there has been no change in the applicable building code negatively affecting the performance of this product.

**TERMINATION** of this NOA will occur after the expiration date or if there has been a revision or change in the materials, use, and/or manufacture of the product or process. Misuse of this NOA as an endorsement of any product, for sales, advertising or any other purposes shall automatically terminate this NOA. Failure to comply with any section of this NOA shall be cause for termination and removal of NOA.

**ADVERTISEMENT:** The NOA number preceded by the words Miami–Dade County, Florida, and followed by the expiration date may be displayed in advertising literature. If any portion of the NOA is displayed, then it shall be done in its entirety.

**INSPECTION:** A copy of this entire NOA shall be provided to the user by the manufacturer or its distributors and shall be available for inspection at the job site at the request of the Building Official.

This NOA consists of this page 1, evidence pages E–1 and E–2, as well as approval document mentioned above.

The submitted documentation was reviewed by **Jaime D. Gascon, P. E.**

MIAMI-DADE COUNTY APPROVED

J Gascon
7/22/10

**PGT Industries**

## NOTICE OF ACCEPTANCE: EVIDENCE SUBMITTED

**A. DRAWINGS**

1. Manufacturer's die drawings and sections.
2. Drawing No **08–00885**, titled "Series PW 2720 PVC Fixed Window Impact & PW 2820 PVC Fixed Window Impact", sheets 1 through 7 of 7, dated 10/21/09 with revision "**B**", dated 07/08/10, prepared by manufacture, signed and sealed by Luis R. Lomas, P. E.

**B. TESTS**

1. Test reports on: 1) Air Infiltration Test, per FBC, TAS 202–94
   2) Uniform Static Air Pressure Test, Loading per FBC TAS 202–94
   3) Water Resistance Test, per FBC, TAS 202–94
   4) Large Missile Impact Test per FBC, TAS 201–94
   5) Cyclic Wind Pressure Loading per FBC, TAS 203–94

   along with marked–up drawings and installation diagram of awning window, prepared by National Certified Testing Laboratories, Inc., Test Reports No.'s **NCTL 210–3642–1**, **NCTL 210–3642–2**, **NCTL 210–3636–1**, **NCTL 210–3636–2** and **NCTL 210–3635–1**, dated 09/17/2009, all signed and sealed by Gerard J. Ferrara, P. E.

**C. CALCULATIONS**

1. Anchor verification calculations and structural analysis, complying with FBC–2007, dated 10/28/2009, prepared, signed, sealed and dated 07/15/2010 by Luis R. Lomas, P. E.

   **Complies with ASTM E1300–02/ 04**

**D. QUALITY ASSURANCE**

1. Miami–Dade Building Code Compliance Office (BCCO).

**E. MATERIAL CERTIFICATIONS**

1. Notice of Acceptance No. **09–0312.03** issued to E.I. DuPont DeNemours & Co., Inc. for their "**DuPont Sentry Glass® Interlayer**" dated 05/13/09, expiring on 01/14/12.
2. Notice of Acceptance No. **09–0312.02** issued to E.I. DuPont DeNemours & Co., Inc. for their "**DuPont Butacite® PVB, Interlayer**" dated 05/13/09, expiring on 12/11/10.

**F. STATEMENTS**

1. Statement letter of no financial interest, conformance and compliance with the FBC 2007, dated 10/21/2009, signed and sealed by Luis R. Lomas, P. E.

**Jaime D. Gascon, P. E.**
**Chief, Product Control Division**
**NOA No. 09–1104.02**
**Expiration Date: August 11, 2015**
**Approval Date: August 11, 2010**

## NOTICE OF ACCEPTANCE: EVIDENCE SUBMITTED

**F. STATEMENTS (CONTINUED)**

2. Laboratory compliance letter for Test Reports No.'s **NCTL 210–3642–1** **NCTL 210–3642–2**, **NCTL 210–3636–1**, **NCTL 210–3636–2** and **NCTL 210–3635–1**, issued by National Certified Testing Laboratories, Inc., dated 09/17/2009, signed and sealed by Gerard J. Ferrara, P. E.
3. Laboratory addendum letter for Test Reports No. **NCTL 210–3635–1** issued by National Certified Testing Laboratories, Inc., dated 04/06/2010, signed and sealed by Gerard J. Ferrara, P. E.

**G. OTHERS**

1. None.

**Jaime D. Gascon, P. E.**
**Chief, Product Control Division**
**NOA No. 09–1104.02**
**Expiration Date: August 11, 2015**
**Approval Date: August 11, 2010**

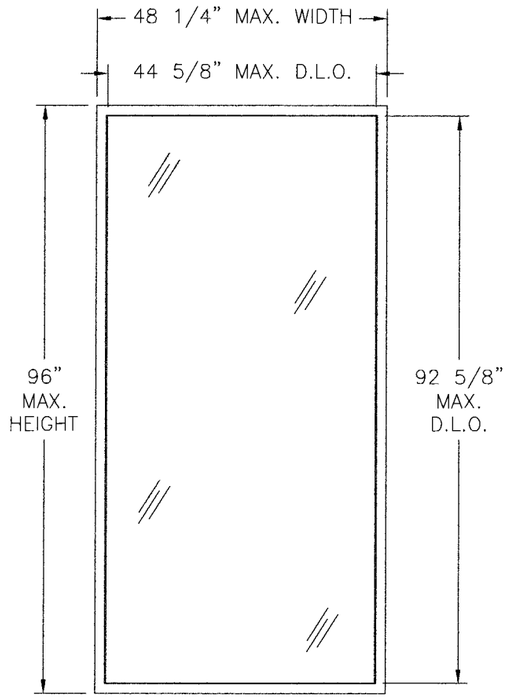


**PW2720 AND PW2820**
**PVC FIXED WINDOW**
*48 1/4" x 96"*
*EXTERIOR VIEW*

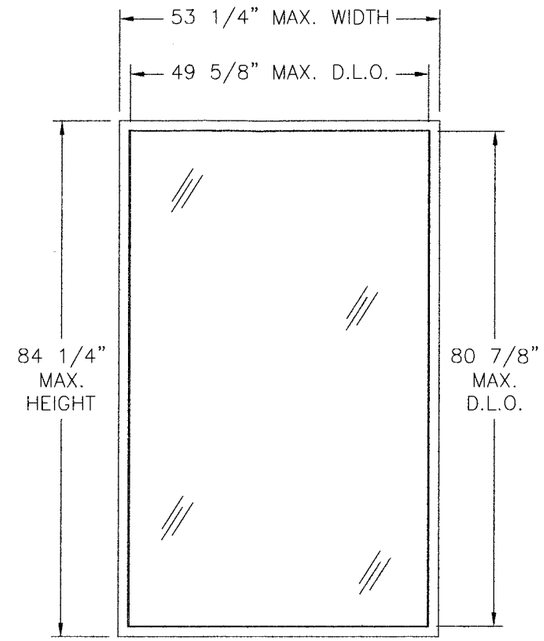


**PW2720 AND PW2820**
**PVC FIXED WINDOW**
*53 1/4" x 84 1/4"*
*EXTERIOR VIEW*

*PW2720 WITH GLAZING TYPES C AND D*

| DESIGN PRESSURE RATING | IMPACT RATING |
|---|---|
| + 65.0 PSF<br>-80.0 PSF | LARGE AND SMALL MISSILE IMPACT |

*PW2820 WITH GLAZING TYPES A AND B*

| DESIGN PRESSURE RATING | IMPACT RATING |
|---|---|
| + 100.0 PSF<br>-120.0 PSF | LARGE AND SMALL MISSILE IMPACT |

REVISIONS

| REV | DESCRIPTION | DATE | APPROVED |
|---|---|---|---|
| A | PER DADE LETTER DATED 2-4-10 | 03/25/10 | R.L. |
| B | ADDED "WHITE" TO ALL PVC | 07/08/10 | R.L. |

NOTES:

1) THE PRODUCT SHOWN HEREIN IS DESIGNED AND MANUFACTURED TO COMPLY WITH REQUIREMENTS OF THE 2007 FLORIDA BUILDING CODE.
2) WOOD FRAMING AND MASONRY OPENING TO BE DESIGNED AND ANCHORED TO PROPERLY TRANSFER ALL LOADS TO STRUCTURE. FRAMING AND MASONRY OPENING IS THE RESPONSIBILITY OF THE ARCHITECT OR ENGINEER OF RECORD.
3) UNITS MUST BE GLAZED PER ASTM E1300 SEE SHEET 7 FOR APPROVED GLASS TYPES.
4) APPROVED IMPACT PROTECTIVE SYSTEM IS NOT REQUIRED FOR THIS PRODUCT IN WIND-BORNE DEBRIS REGIONS.
5) INSTALLATION ANCHORS SHALL BE INSTALLED IN ACCORDANCE WITH ANCHOR MANUFACTURER'S INSTALLATION INSTRUCTIONS, AND ANCHORS SHALL NOT BE USED IN SUBSTRATES WITH STRENGTHS LESS THAN THE MINIMUM STRENGTH SPECIFIED BELOW:
   A. WOOD – MINIMUM SPECIFIC GRAVITY OF G=0.42
   B. CONCRETE – MINIMUM COMPRESSIVE STRENGTH OF 3,200 PSI.
   C. MASONRY – STRENGTH CONFORMANCE TO ASTM C-90, GRADE N, TYPE 1 (OR GREATER).
   D. METAL FRAMING – 16GA (.060) MINIMUM THICKNESS
6) ALLOWABLE STRESS INCREASE OF 1/3 WAS NOT USED IN THE DESIGN OF THE PRODUCT SHOWN HEREIN. WIND LOAD DURATION FACTOR Cd=1.6 WAS USED FOR WOOD ANCHOR CALCULATIONS.
7) FRAME MATERIAL: EXTRUDED WHITE RIGID PVC .108" THICK.
8) PW2720 UNITS ARE GLAZED WITH BUTACITE PVB INTERLAYER, GLAZING TYPES C AND D.
   PW2820 UNITS ARE GLAZED WITH SENTRY GLASPLUS INT ERLAYER, GLAZING TYPES A AND B.
   ALL OTHER COMPONENTS IN PW2720 AND PW2820 ARE THE SAME.

TABLE OF CONTENTS


| SHEET NO. | DESCRIPTION |
|---|---|
| 1 | ELEVATION AND NOTES |
| 2 | ELEVATION AND DESIGN PRESSURE CHART |
| 3 | ANCHORING AND NOTES |
| 4 | BILL OF MATERIALS AND CROSS SECTIONS |
| 5 – 6 | INSTALLATION DETAILS |
| 7 | GLAZING DETAILS AND COMPONENTS |


Approved as complying with the Florida Building Code
Date 08/17/2010
NOA# 09-1104.02
Miami Dade Product Control Division
By

PGT INDUSTRIES
1070 TECHNOLOGY DRIVE
NOKOMIS,FL 3275

PW2720 PVC FIXED WINDOW IMPACT
PW2820 PVC FIXED WINDOW IMPACT
ELEVATION AND NOTES

| DRAWN: | DWG NO. | REV |
|---|---|---|
| TJH | 08-00885 | B |

| SCALE | DATE | SHEET |
|---|---|---|
| NTS | 10/21/09 | 1 OF 7 |

7/14/10

Luis R. Lomas P.E.
Florida No. 62514

| REVISIONS | | | |
|---|---|---|---|
| REV | DESCRIPTION | DATE | APPROVED |
| A | PER DADE LETTER DATED 2-4-10 | 03/25/10 | R.L. |

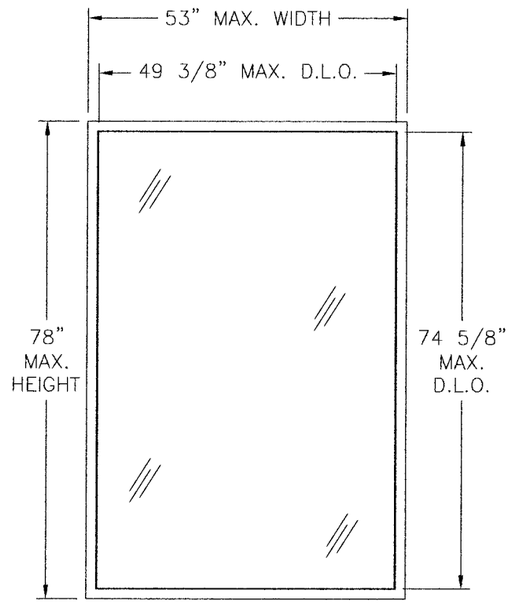


*PW2820 PVC FIXED WINDOW*

*53" x 78"*
*EXTERIOR VIEW*

*PW2820 WITH GLAZING TYPE B*

| DESIGN PRESSURE RATING | IMPACT RATING |
|---|---|
| ±120PSF | LARGE AND SMALL MISSILE IMPACT |

## *Maximum design pressure capacity chart*

| Height (in) | Panel width (in) | | | | | | | | | | | |
|---|---|---|---|---|---|---|---|---|---|---|---|---|
| | ***24.0*** | | ***30.0*** | | ***36.0*** | | ***42.0*** | | ***48.0*** | | ***53.0*** | |
| | ***Pos*** | ***Neg*** | ***Pos*** | ***Neg*** | ***Pos*** | ***Neg*** | ***Pos*** | ***Neg*** | ***Pos*** | ***Neg*** | ***Pos*** | ***Neg*** |
| ***24.0*** | 150.0 | 150.0 | 150.0 | 150.0 | 150.0 | 150.0 | 150.0 | 150.0 | 150.0 | 150.0 | 150.0 | 150.0 |
| ***30.0*** | 150.0 | 150.0 | 150.0 | 150.0 | 150.0 | 150.0 | 150.0 | 150.0 | 150.0 | 150.0 | 150.0 | 150.0 |
| ***36.0*** | 150.0 | 150.0 | 150.0 | 150.0 | 150.0 | 150.0 | 150.0 | 150.0 | 150.0 | 150.0 | 150.0 | 150.0 |
| ***42.0*** | 150.0 | 150.0 | 150.0 | 150.0 | 150.0 | 150.0 | 150.0 | 150.0 | 150.0 | 150.0 | 150.0 | 150.0 |
| ***48.0*** | 150.0 | 150.0 | 150.0 | 150.0 | 150.0 | 150.0 | 150.0 | 150.0 | 150.0 | 150.0 | 150.0 | 150.0 |
| ***54.0*** | 150.0 | 150.0 | 150.0 | 150.0 | 150.0 | 150.0 | 150.0 | 150.0 | 150.0 | 150.0 | 150.0 | 150.0 |
| ***60.0*** | 150.0 | 150.0 | 150.0 | 150.0 | 150.0 | 150.0 | 150.0 | 150.0 | 145.8 | 145.8 | 141.9 | 141.9 |
| ***66.0*** | 150.0 | 150.0 | 150.0 | 150.0 | 150.0 | 150.0 | 146.6 | 146.6 | 137.5 | 137.5 | 132.4 | 132.4 |
| ***72.0*** | 150.0 | 150.0 | 150.0 | 150.0 | 150.0 | 150.0 | 141.2 | 141.2 | 131.2 | 131.2 | 125.4 | 125.4 |
| ***78.0*** | 150.0 | 150.0 | 150.0 | 150.0 | 150.0 | 150.0 | 136.8 | 136.8 | 126.4 | 126.4 | 120.0 | 120.0 |

Approved as complying with the Florida Building Code
Date 08/11/2010
NOA# 09-1164.02
Miami Dade Product Control Division
By

PGT INDUSTRIES
1070 TECHNOLOGY DRIVE
NOKOMIS,FL 3275

PW2720 PVC FIXED WINDOW IMPACT
PW2820 PVC FIXED WINDOW IMPACT
ELEVATION AND DESIGN PRESSURE CHART

| DRAWN: | DWG NO. | REV |
|---|---|---|
| TJH | 08-00885 | B |
| SCALE NTS | DATE 10/21/09 | SHEET 2 OF 7 |

7/19/10

Luis R. Lomas P.E.
Florida No. 62514

| REVISIONS | | | |
|---|---|---|---|
| REV | DESCRIPTION | DATE | APPROVED |
| A | PER DADE LETTER DATED 2-4-10 | 03/25/10 | R.L. |

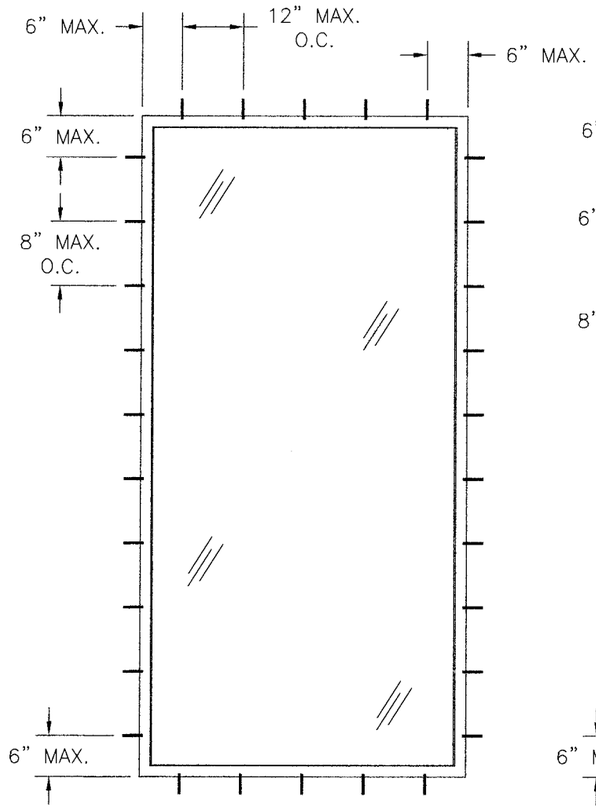


*PW2720 AND PW2820*
*PVC FIXED WINDOW*
*48 1/4" x 96"*
*EXTERIOR VIEW*

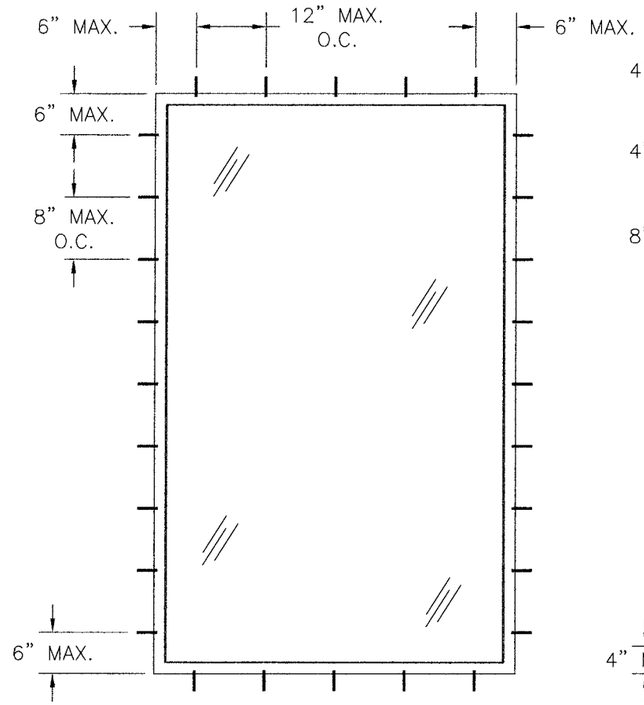


*PW2720 AND PW2820*
*PVC FIXED WINDOW*
*53 1/4" x 84 1/4"*
*EXTERIOR VIEW*

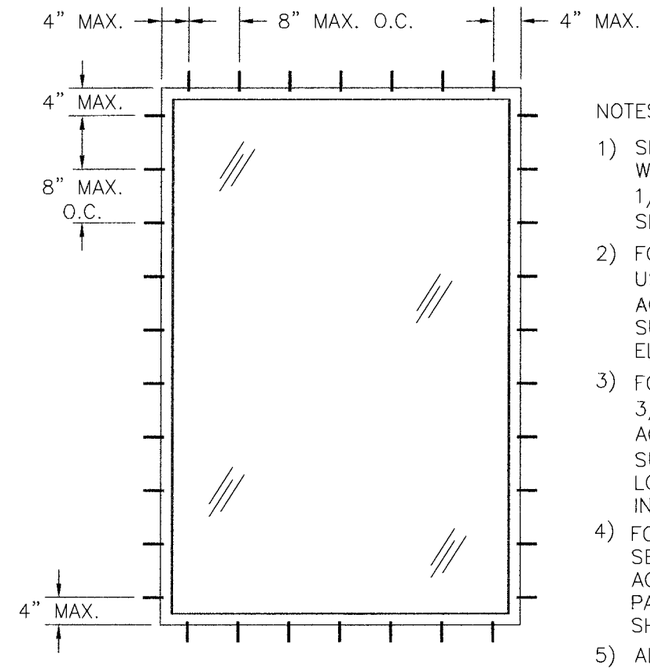


*PW2820 PVC FIXED WINDOW*
*53" x 78"*
*EXTERIOR VIEW*

NOTES:

1) SHIM AS REQUIRED AT EACH INSTALLATION ANCHOR WITH LOAD BEARING SHIM. SHIM WHERE SPACE OF 1/16" OR GREATER OCCURS. MAXIMUM ALLOWABLE SHIM STACK TO BE 1/4".
2) FOR INSTALLATION INTO WOOD FRAMING OR 2X BUCK USE #10 WOOD SCREW WITH SUFFICIENT LENGTH TO ACHIEVE A 1 3/8" MINIMUM EMBEDMENT INTO SUBSTRATE. LOCATE ANCHORS AS SHOWN IN ELEVATIONS AND INSTALLATION DETAILS.
3) FOR INSTALLATION INTO CONCRETE/MASONRY USE 3/16" ITW TAPCON WITH SUFFICIENT LENGTH TO ACHIEVE A 1 1/4" MINIMUM EMBEDMENT INTO SUBSTRATE WITH 2 5/8" MINIMUM EDGE DISTANCE. LOCATE ANCHORS AS SHOWN IN ELEVATIONS AND INSTALLATION DETAILS.
4) FOR ANCHORING INTO METAL FRAMING USE #10 TEK SELF TAPPING SCREWS WITH SUFFICIENT LENGTH TO ACHIEVE A MINIMUM EMBEDMENT OF THREE THREADS PAST THE FRAME THICKNESS. LOCATE ANCHORS AS SHOWN IN ELEVATIONS AND INSTALLATION DETAILS.
5) ALL FASTENERS TO BE CORROSION RESISTANT.

Approved as complying with the Florida Building Code
Date 08/11/2010
NOA# 09-1104.02
Miami Dade Product Control Division
By

PGT INDUSTRIES
1070 TECHNOLOGY DRIVE
NOKOMIS, FL 34275

PW2720 PVC FIXED WINDOW IMPACT
PW2820 PVC FIXED WINDOW IMPACT
ANCHORING AND NOTES

| DRAWN: | DWG NO. | REV |
|---|---|---|
| TJH | 08-00885 | B |
| SCALE NTS | DATE 10/21/09 | SHEET 3 OF 7 |

Luis R. Lomas
7/14/10

Luis R. Lomas P.E.
Florida No. 62514

| PARTS LIST | | | | |
|---|---|---|---|---|
| NO. | PART NUMBER | DESCRIPTION | MANUFACTURER | MATERIAL |
| 1 | 8304 | FRAME HEAD, JAMB AND SILL | LB PLASTICS INC. | WHITE RIGID PVC |
| 2 | 8345 | PICTURE WINDOW COVER | LB PLASTICS INC. | WHITE RIGID PVC |
| 3 | 8326 | 7/8" PLAIN BEAD | LB PLASTICS INC. | WHITE RIGID PVC |
| 4 | 2NB-8K-038 | RIGID FILLER 85 DUROMETER | FRANK LOWE | NEOPRENE |
| 5 | 8343 | FIN ADAPTER | LB PLASTICS INC. | WHITE RIGID PVC |
| 6 | SIKAFLEX 552 | GLAZING COMPOUND | SIKA | POLYURETHANE |
| 7 | | IMPACT GLAZING SEE SHEET 7 | | |

| REVISIONS | | | |
|---|---|---|---|
| REV | DESCRIPTION | DATE | APPROVED |
| A | PER DADE LETTER DATED 2-4-10 | 03/25/10 | R.L. |

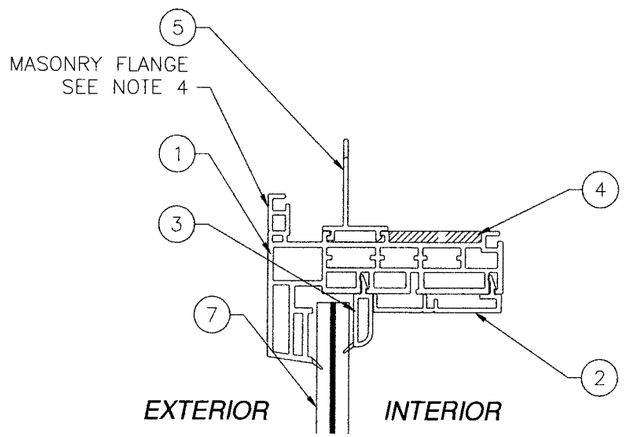


VERTICAL CROSS SECTION
W/FLANGE & FIN FRAME

HEAD SHOWN JAMBS & SILL SIMILAR

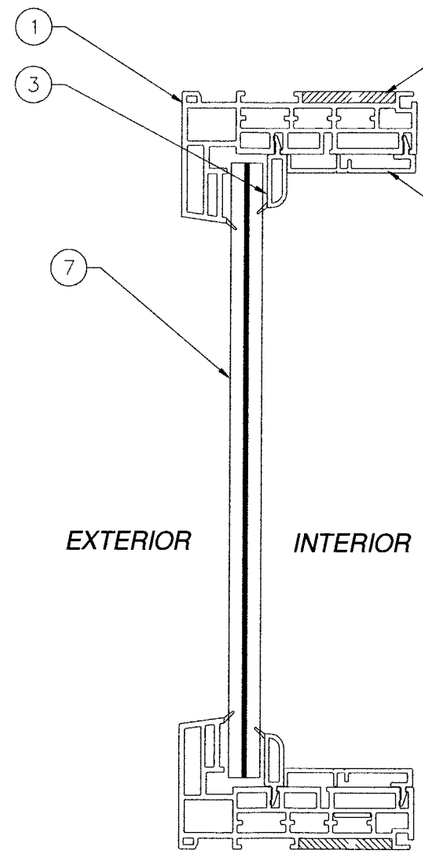


VERTICAL CROSS SECTION

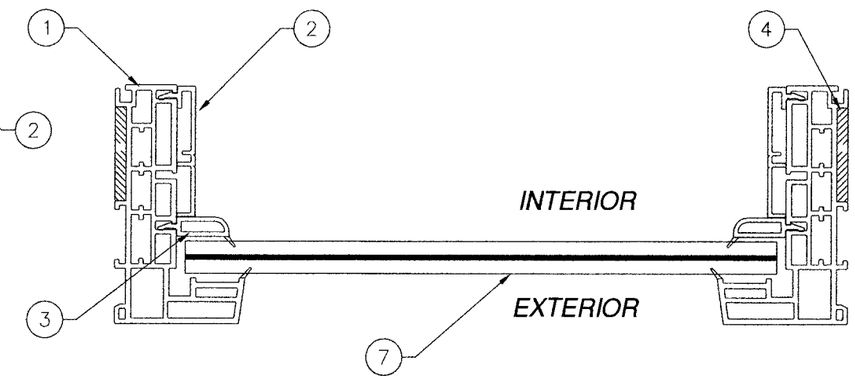


HORIZONTAL CROSS SECTION

CONSTRUCTION NOTES:

1) FRAME HEAD, JAMBS AND SILL ARE EXTRUDED RIGID WHITE PVC LINEALS. ALL CORNERS ARE MITERED AND WELDED.
2) ITEM #6, FIN ADAPTER, IS A NON-STRUCTURAL ADD-ON PART. MASONRY FLANGE IS EXTRUDED INTO FRAME. WHEN UNIT IS NOT INSTALLED INTO A MASONRY APPLICATION FLANGE MAY BE SCORED AND REMOVED BEFORE INSTALLATION. SEE INSTALLATION DETAILS SHEETS 5-6.
3) WHITE PVC EXTRUSION TO BE LABELED WITH AAMA EXTRUDER CODE, EXTRUDER NAME, CITY, STATE AND MDCA

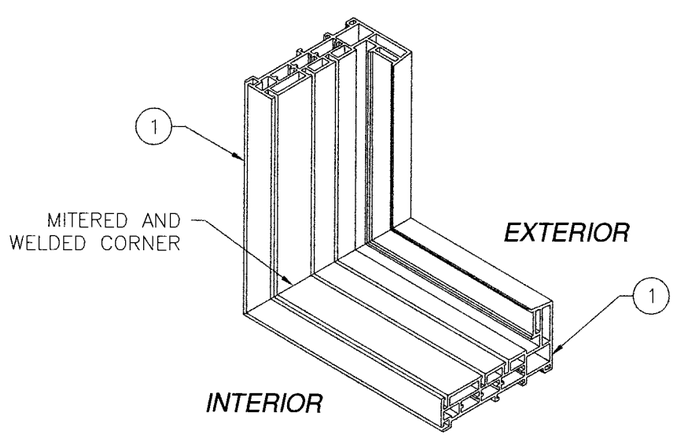


FRAME CORNER CONSTRUCTION DETAIL

Approved as complying with the Florida Building Code
Date 08/11/2010
NOA# 09-1104.02
Miami Dade Product Control Division
By

PGT INDUSTRIES
1070 TECHNOLOGY DRIVE
NOKOMIS, FL 34275

PW2720 PVC FIXED WINDOW IMPACT
PW2820 PVC FIXED WINDOW IMPACT
BILL OF MATERIALS AND CROSS SECTIONS

| DRAWN: | DWG NO. | REV |
|---|---|---|
| TJH | 08-00885 | B |
| SCALE NTS | DATE 10/21/09 | SHEET 4 OF 7 |

7/14/10

Luis R. Lomas P.E.
Florida No. 62514

| REVISIONS | | | |
|---|---|---|---|
| REV | DESCRIPTION | DATE | APPROVED |
| A | PER DADE LETTER DATED 2-4-10 | 03/25/10 | R.L. |

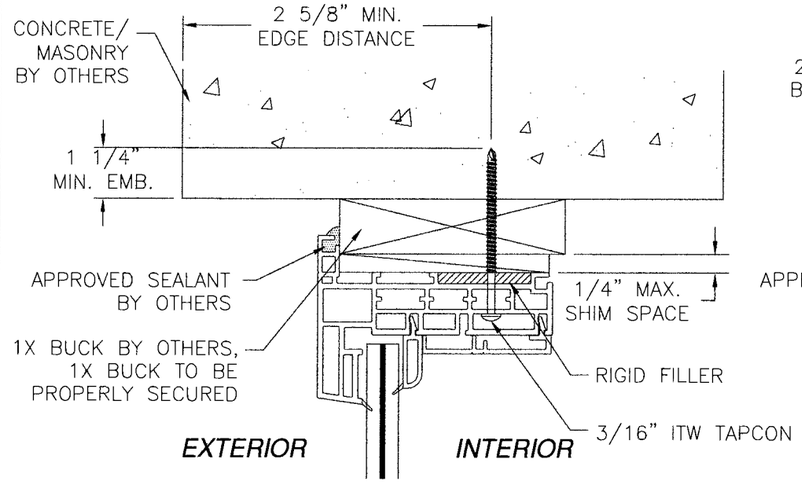


**HEAD**

*CONCRETE/MASONRY FLANGE INSTALLATION*
*HEAD SHOWN, JAMBS AND SILL SIMILAR*

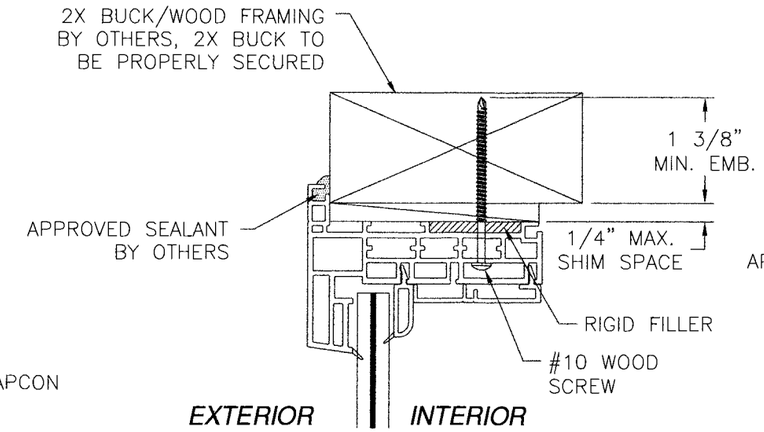


**HEAD**

*WOOD FRAMING OR 2X BUCK FLANGE INSTALLATION*
*HEAD SHOWN, JAMBS AND SILL SIMILAR*

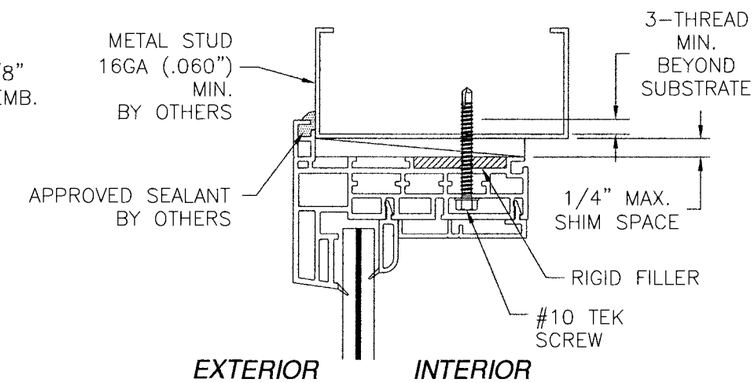


**HEAD**

*METAL FRAMING FLANGE INSTALLATION*
*HEAD SHOWN, JAMBS AND SILL SIMILAR*

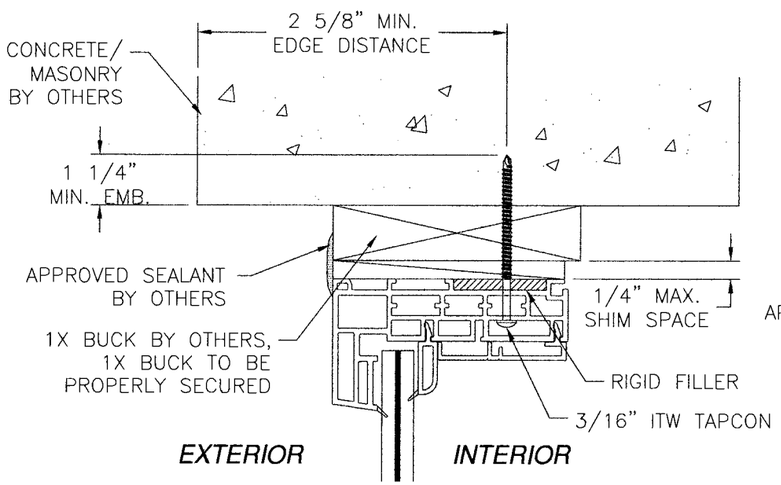


**HEAD**

*CONCRETE/MASONRY BOX FRAME INSTALLATION*
*HEAD SHOWN, JAMBS AND SILL SIMILAR*

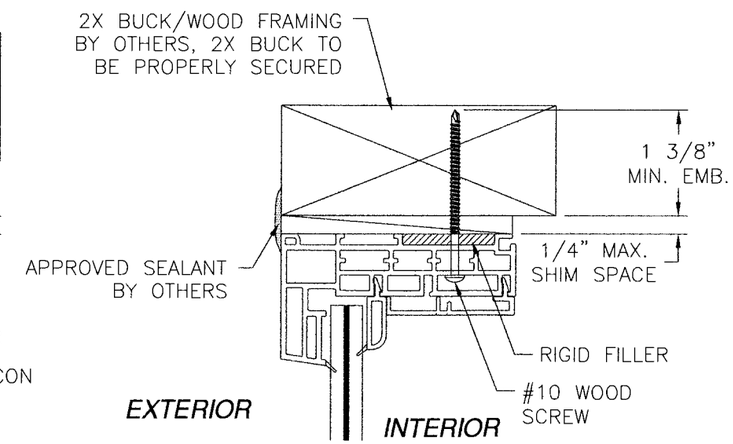


**HEAD**

*WOOD FRAMING OR 2X BUCK BOX FRAME INSTALLATION*
*HEAD SHOWN, JAMBS AND SILL SIMILAR*

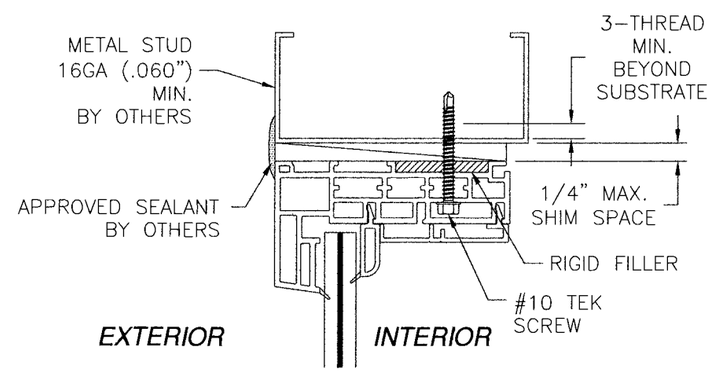


**HEAD**

*METAL FRAMING BOX FRAME INSTALLATION*
*HEAD SHOWN, JAMBS AND SILL SIMILAR*

Approved as complying with the Florida Building Code
Date 08/11/2010
NOA# 09-1104.02
Miami Dade Product Control Division
By

PGT INDUSTRIES
1070 TECHNOLOGY DRIVE
NOKOMIS, FL 34275

PW2720 PVC FIXED WINDOW IMPACT
PW2820 PVC FIXED WINDOW IMPACT
INSTALLATION DETAILS

| DRAWN: | DWG NO. | REV |
|---|---|---|
| TJH | 08-00885 | B |
| SCALE NTS | DATE 10/21/09 | SHEET 5 OF 7 |

7/14/10

Luis R. Lomas P.E.
Florida No. 62514

| REVISIONS | | | |
|---|---|---|---|
| REV | DESCRIPTION | DATE | APPROVED |
| A | PER DADE LETTER DATED 2-4-10 | 03/25/10 | R.L. |

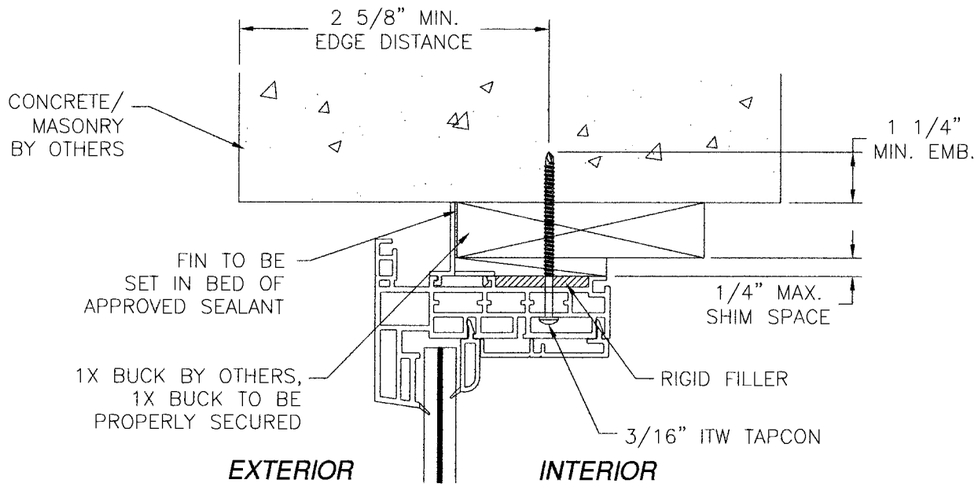


**HEAD**

*CONCRETE/MASONRY FIN INSTALLATION*
*HEAD SHOWN, JAMBS AND SILL SIMILAR*

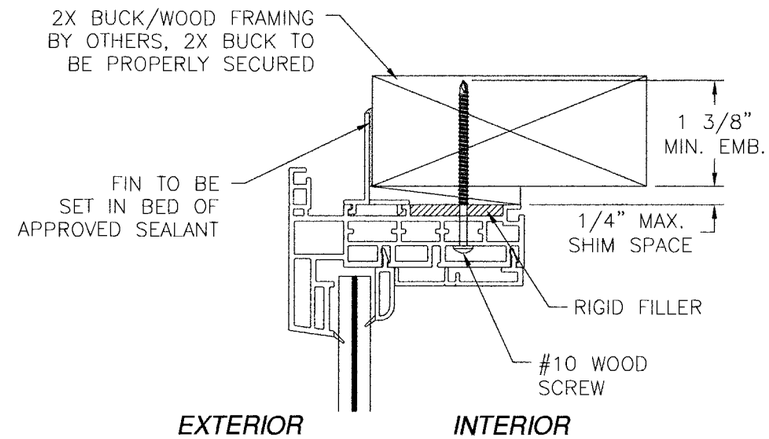


**HEAD**

*WOOD FRAMING OR 2X BUCK FIN INSTALLATION*
*HEAD SHOWN, JAMBS AND SILL SIMILAR*

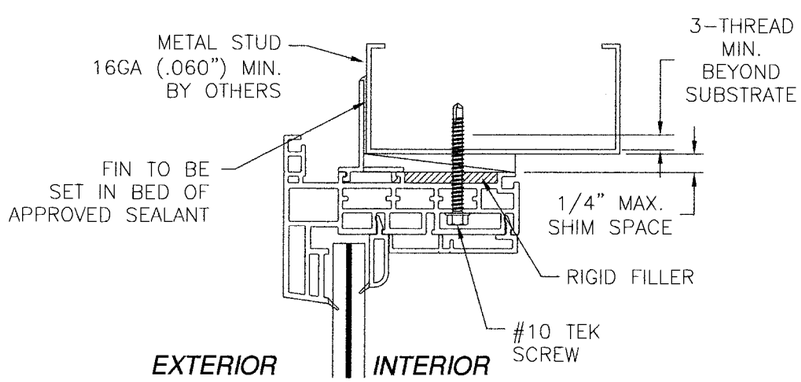


**HEAD**

*METAL FRAMING FIN INSTALLATION*
*HEAD SHOWN, JAMBS AND SILL SIMILAR*

Approved as complying with the Florida Building Code
Date 08/11/2010
NOA# 09-1104.02
Miami Dade Product Control Division
By

PGT INDUSTRIES
1070 TECHNOLOGY DRIVE
NOKOMIS, FL 34275

PW2720 PVC FIXED WINDOW IMPACT
PW2820 PVC FIXED WINDOW IMPACT
INSTALLATION DETAILS

| DRAWN: | DWG NO. | REV |
|---|---|---|
| TJH | 08-00885 | B |
| SCALE NTS | DATE 10/21/09 | SHEET 6 OF 7 |

7/14/10

Luis R. Lomas P.E.
Florida No. 62514

| REVISIONS | | | |
|---|---|---|---|
| REV | DESCRIPTION | DATE | APPROVED |
| A | PER DADE LETTER DATED 2-4-10 | 03/25/10 | R.L. |

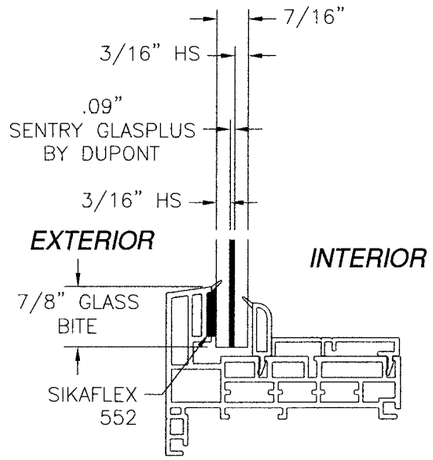


GLASS TYPE A

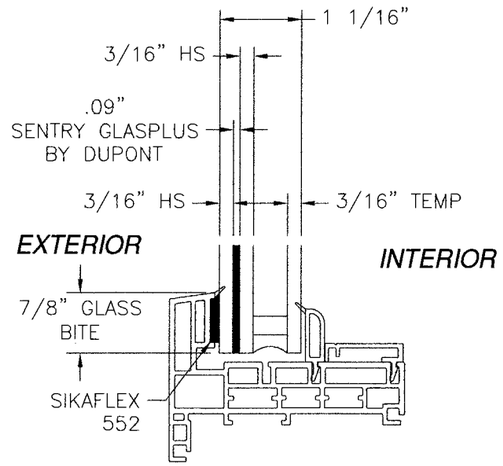


GLASS TYPE B

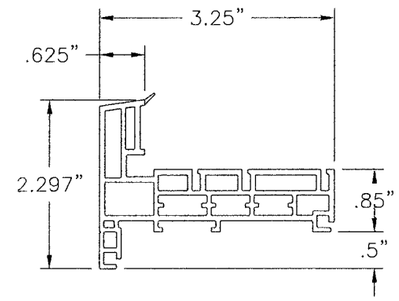


1 FRAME HEAD, JAMB AND SILL
WHITE RIGID PVC .108" THICK

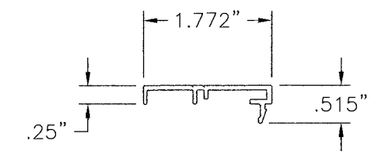


2 PICTURE WINDOW COVER
WHITE RIGID PVC .06" THICK

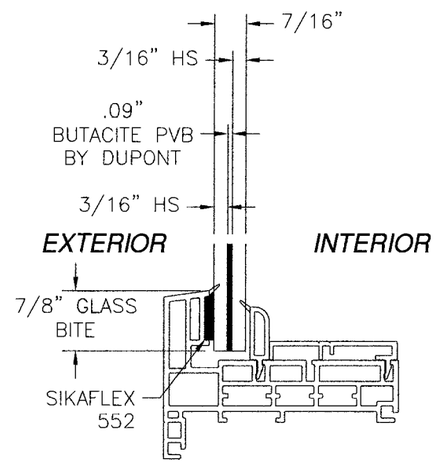


GLASS TYPE C

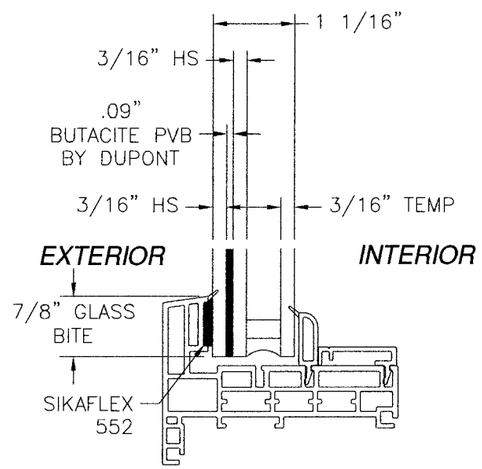


GLASS TYPE D

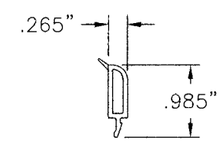


3 7/8" PLAIN BEAD
WHITE RIGID PVC .06" THICK

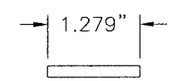


4 RIGID FILLER
85 DUROMETER
NEOPRENE .15" THICK

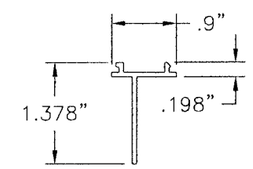


5 FIN ADAPTER
WHITE RIGID PVC .062" THICK

Approved as complying with the Florida Building Code
Date 08/11/2010
NOA# 09-1104.02
Miami Dade Product Control Division
By

PGT INDUSTRIES
1070 TECHNOLOGY DRIVE
NOKOMIS, FL 34275

PW2720 PVC FIXED WINDOW IMPACT
PW2820 PVC FIXED WINDOW IMPACT
GLAZING DETAILS AND COMPONENTS

| DRAWN: | DWG NO. | REV |
|---|---|---|
| TJH | 08-00885 | B |
| SCALE NTS | DATE 10/21/09 | SHEET 7 OF 7 |

Luis R. Lomas
7/19/10

Luis R. Lomas P.E.
Florida No. 62514