MIAMI-DADE COUNTY
BUILDING CODE COMPLIANCE OFFICE (BCCO)
PRODUCT CONTROL DIVISION

MIAMI-DADE COUNTY, FLORIDA
METRO-DADE FLAGLER BUILDING
140 WEST FLAGLER STREET, SUITE 1603
MIAMI, FLORIDA 33130-1563
(305) 375-2901 FAX (305) 372-6339
www.miamidade.gov/buildingcode

NOTICE OF ACCEPTANCE (NOA)

Glass Tech Engineering, Inc.
8321 N.W. 70th Street
Miami, FL 33166

SCOPE:

This NOA is being issued under the applicable rules and regulations governing the use of construction materials. The documentation submitted has been reviewed by Miami-Dade County Product Control Division and accepted by the Board of Rules and Appeals (BORA) to be used in Miami Dade County and other areas where allowed by the Authority Having Jurisdiction (AHJ).

This NOA shall not be valid after the expiration date stated below. The Miami-Dade County Product Control Division (In Miami Dade County) and/or the AHJ (in areas other than Miami Dade County) reserve the right to have this product or material tested for quality assurance purposes. If this product or material fails to perform in the accepted manner, the manufacturer will incur the expense of such testing and the AHJ may immediately revoke, modify, or suspend the use of such product or material within their jurisdiction. BORA reserves the right to revoke this acceptance, if it is determined by Miami-Dade County Product Control Division that this product or material fails to meet the requirements of the applicable building code. This product is approved as described herein, and has been designed to comply with the Florida Building Code, including the High Velocity Hurricane Zone.

DESCRIPTION: Series "2046 A" Aluminum Window Wall System – L.M.I.

APPROVAL DOCUMENT: Drawing No. **W05-17**, dated 04/08/05 with revision A dated 10/21/09, titled "Series-2046A Alum Window Wall System (L.M.I.)", Sheets 1 through 7 of 7, prepared by Al-Farooq Corporation, signed and sealed by Javad Ahmad, P.E., bearing the Miami-Dade County Product Control Revision stamp with the Notice of Acceptance number and expiration date by the Miami-Dade County Product Control Division.

MISSILE IMPACT RATING: Large and Small Missile Impact Resistant

LIMITATIONS: Miami-Dade County Product Control Approved Shutters Or Protection Devices Shall Be Required.

LABELING: Each unit shall bear a permanent label with the manufacturer's name or logo, city, state and following statement: "Miami-Dade County Product Control Approved", unless otherwise noted herein.

RENEWAL of this NOA shall be considered after a renewal application has been filed and there has been no change in the applicable building code negatively affecting the performance of this product.

TERMINATION of this NOA will occur after the expiration date or if there has been a revision or change in the materials, use, and/or manufacture of the product or process. Misuse of this NOA as an endorsement of any product, for sales, advertising or any other purposes shall automatically terminate this NOA. Failure to comply with any section of this NOA shall be cause for termination and removal of NOA.

ADVERTISEMENT: The NOA number preceded by the words Miami-Dade County, Florida, and followed by the expiration date may be displayed in advertising literature. If any portion of the NOA is displayed, then it shall be done in its entirety.

INSPECTION: A copy of this entire NOA shall be provided to the user by the manufacturer or its distributors and shall be available for inspection at the job site at the request of the Building Official.

This NOA **revises and renews NOA # 05-0620.01** and consists of this page 1 and evidence pages E-1 and E-2, as well as approval document mentioned above.

The submitted documentation was reviewed by **Manuel Perez, P.E.**

MIAMI-DADE COUNTY APPROVED

NOA No. 09-1109.02
Expiration Date: August 04, 2015
Approval Date: March 31, 2010

Glass Tech Engineering, Inc.

NOTICE OF ACCEPTANCE: EVIDENCE SUBMITTED

A. DRAWINGS

1. Manufacturer's die drawings and sections.
2. Drawing No **W05-17**, Sheets 1 through 7 of 7, titled "Series-2046A Alum. Window Wall System (L.M.I.)", dated 04/08/05 with revision A dated 10/21/09, prepared by Al-Farooq Corporation, signed and sealed by Javad Ahmad, P.E.

B. TESTS

1. Test report on: 1) Air Infiltration Test, per FBC, TAS 202-94
   2) Uniform Static Air Pressure Test, Loading per FBC, TAS 202-94
   3) Water Resistance Test, per FBC, TAS 202-94
   4) Small Missile Impact Test per FBC, TAS 201-94
   5) Large Missile Impact Test per FBC, TAS 201-94
   6) Cyclic Wind Pressure Loading per FBC, TAS 203-94

   along with installation diagram of a aluminum window wall system, marked-up by Fenestration Testing Laboratory, Inc. Test Report No. **FTL-4537**, dated 03/23/05, signed and sealed by Edmundo Largaespada, P.E.
   (Submitted under previous approval 05-0620.01)
2. Test report on: 1) Air Infiltration Test, per FBC, TAS 202-94
   2) Uniform Static Air Pressure Test, Loading per FBC, TAS 202-94
   3) Water Resistance Test, per FBC, TAS 202-94
   4) Small Missile Impact Test per FBC, TAS 201-94
   5) Large Missile Impact Test per FBC, TAS 201-94
   6) Cyclic Wind Pressure Loading per FBC, TAS 203-94

   along with installation diagram of a aluminum window wall system, marked-up by Fenestration Testing Laboratory, Inc. Test Report No. **FTL-4537**, dated 03/21/05, signed and sealed by Edmundo Largaespada, P.E.
   (Submitted under previous approval 05-0620.01)

C. CALCULATIONS

1. Anchor verification calculations and structural analysis, complying with FBC-2007, prepared by Al-Farooq Corporation, dated 10/14/09, signed and sealed by Arshad Viqar, P.E.
   Complies with ASTM E1300-04

D. QUALITY ASSURANCE

1. Miami Dade Building Code Compliance Office (BCCO).

Manuel Perez, P.E.
Product Control Examiner
NOA No. 09-1109.02
Expiration Date: August 04, 2015
Approval Date: March 31, 2010

NOTICE OF ACCEPTANCE: EVIDENCE SUBMITTED

E. MATERIAL CERTIFICATIONS

1. Notice of Acceptance No. **08-0520.08** issued to **Solutia, Inc.** for their "**Vanceva Composites Glass Interlayer**" dated 07/17/08, expiring on 12/11/13.
2. Notice of Acceptance No. **09-0310.03** issued to **Cytec Industries, Inc.** for their "**Uvekol S Laminated Glass Interlayer**", dated 04/22/09, expiring on 02/08/10.

F. STATEMENTS

1. Statement letter of conformance and no financial interest, dated October 14, 2009, signed and sealed by Arshad Viqar, P.E.

G. OTHERS

1. Notice of Acceptance No. **05-0620.01**, issued to Glass Tech Engineering, Inc. for their Series 2046A Aluminum Window Wall System, approved on 08/04/05 and expiring on 08/04/10.

Manuel Perez, P.E.
Product Control Examiner
NOA No. 09-1109.02
Expiration Date: August 04, 2015
Approval Date: March 31, 2010

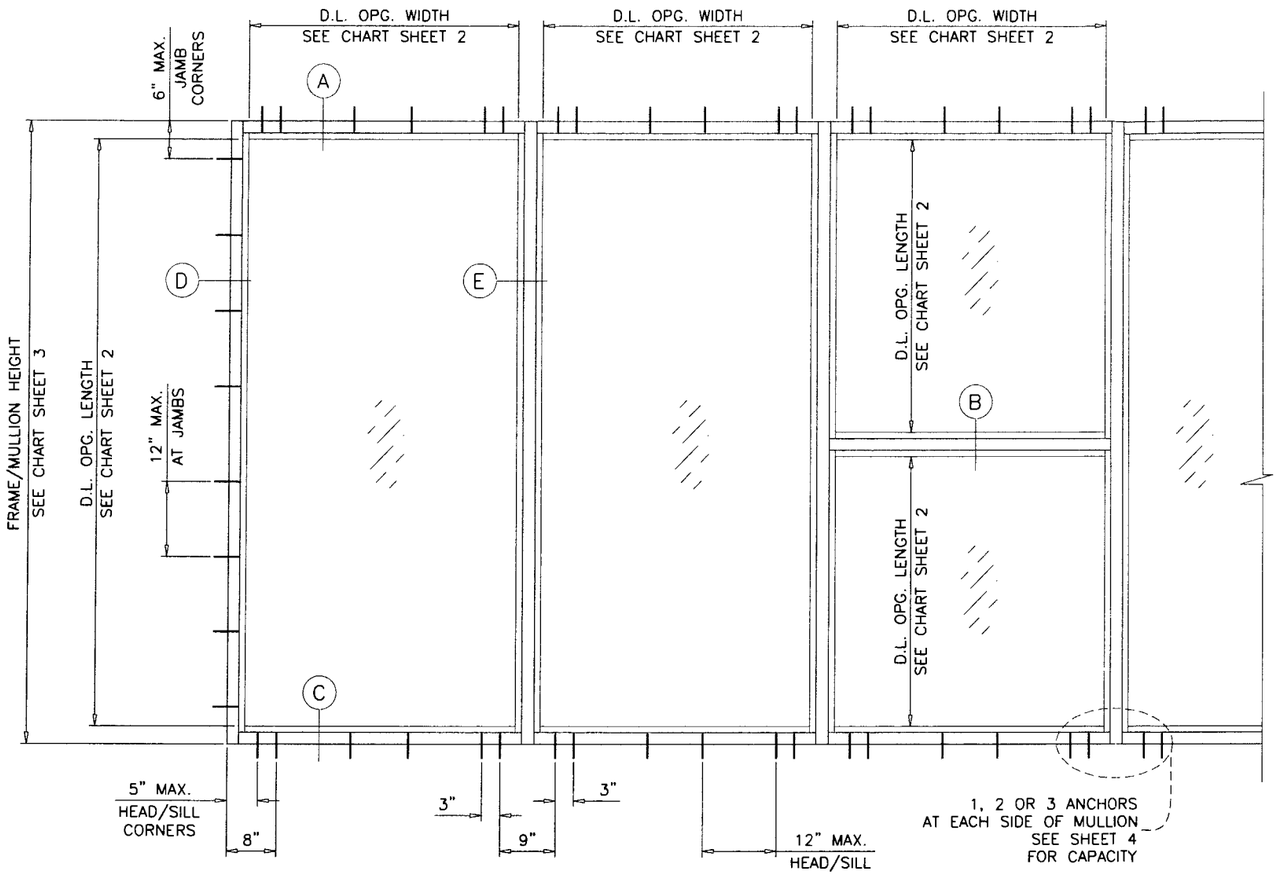

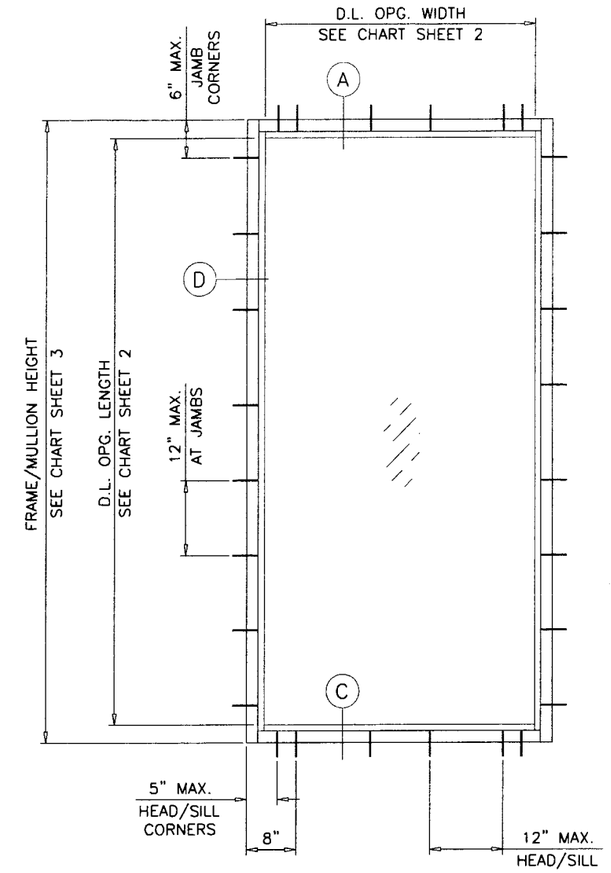

TYPICAL ELEVATIONS

SERIES-2046A IMPACT WINDOW WALL SYSTEM

THIS SYSTEM IS RATED FOR LARGE & SMALL MISSILE IMPACT.
SHUTTERS ARE NOT REQUIRED.

CODE REQUIREMENTS FOR SAFEGUARDS MUST BE OBSERVED.

THIS PRODUCT HAS BEEN DESIGNED AND TESTED TO COMPLY WITH THE REQUIREMENTS OF THE FLORIDA BUILDING CODE 2007 EDITION INCLUDING HIGH VELOCITY HURRICANE ZONE (HVHZ).

WOOD BUCKS BY OTHERS, MUST BE ANCHORED PROPERLY TO TRANSFER LOADS TO THE STRUCTURE.

ANCHORS SHALL BE AS LISTED, SPACED AS SHOWN ON DETAILS, ANCHORS EMBEDMENT TO BASE MATERIAL SHALL BE BEYOND WALL DRESSING OR STUCCO.

ANCHORING OR LOADING CONDITIONS NOT SHOWN IN THESE DETAILS ARE NOT PART OF THIS APPROVAL.

A LOAD DURATION INCREASE IS USED IN DESIGN OF ANCHORS INTO WOOD ONLY.

MATERIALS INCLUDING BUT NOT LIMITED TO STEEL/METAL SCREWS, THAT COME INTO CONTACT WITH OTHER DISSIMILAR MATERIALS SHALL MEET THE REQUIREMENTS OF 2007 FLORIDA BLDG. CODE SECTION 2003.8.4.

INSTRUCTIONS:

USE CHARTS AS FOLLOWS.

STEP 1 DETERMINE DESIGN WIND LOAD REQUIREMENT BASED ON WIND VELOCITY, BLDG. HEIGHT, WIND ZONE USING APPLICABLE ASCE 7 STANDARD.

STEP 2 SEE CHART ON SHEETS 2 FOR DESIGN LOAD CAPACITY OF DESIRED GLASS SIZE.

STEP 3 CHECK MULLION CAPACITY FOR A GIVEN SPACING AND HEIGHT USING CHARTS ON SHEET 3
THE CAPACITY SHOULD EXCEED THE DESIGN LOAD.

STEP 4 USING CHARTS ON SHEET 4 SELECT ANCHOR OPTION WITH DESIGN RATING MORE THAN DESIGN LOAD SPECIFIED IN STEP 1 ABOVE.

STEP 5 THE LOWEST VALUE RESULTING FROM STEPS 2, 3 AND 4 SHALL APPLY TO ENTIRE SYSTEM.

Engr: JAVAD AHMAD
CIVIL
FLA. PE # 70592
C.A.N. 3538

MAR 29 2010

PRODUCT REVISED
as complying with the Florida
Building Code
Acceptance No. 09-1109.02
Expiration Date Aug. 4, 2015
By Maurel Perez
Miami Dade Product Control
Division

AL-FAROOQ CORPORATION
ENGINEERS & PRODUCT DEVELOPMENT
1235 S.W. 87 AVE
MIAMI, FLORIDA 33174
TEL. (305) 264-8100 FAX. (305) 262-6978
STORE\W05-17GTE

SERIES-2046A ALUM WINDOW WALL SYSTEM (L.M.I.)

GLASSTECH ENGINEERING INC.
8321 N.W. 70TH STREET
MIAMI, FL. 33166
TEL. (305) 594-4321 FAX. (305) 599-2730

revisions:

no	date	by	description
A	10.21.09		UPDATED FOR 2007 FBC

date: 04-08-05
scale: 1/2"=1'-0"
dr. by: HAMID
chk. by:

drawing no.
W05-17

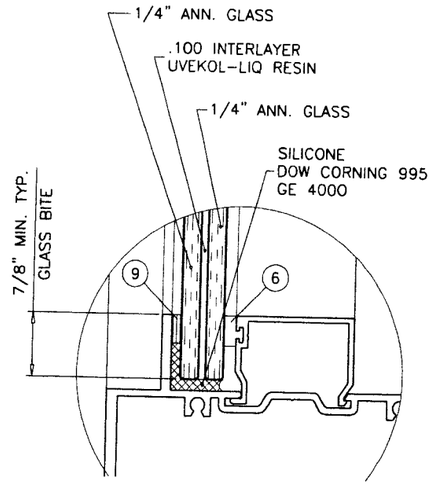

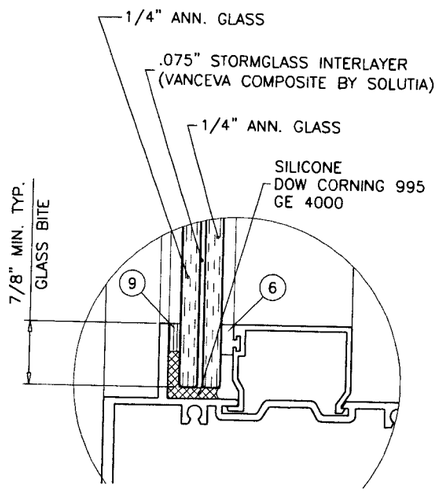

GLASS TYPE 'A'

GLASS DESIGN LOAD CAPACITY – PSF		
NOMINAL DIMS.		GLASS TYPE 'A'
D.L.O. WIDTH	D.L.O. LENGTH	EXT.(+) & INT.(–)
24"	66"	120.0
30"		120.0
36"		120.0
42"		100.0
48"		96.7
54"		89.0
60"		81.9
24"	72"	120.0
30"		120.0
36"		100.0
42"		98.4
48"		88.7
54"		81.0
24"	78"	120.0
30"		120.0
36"		100.0
42"		91.2
48"		81.2
24"	84"	120.0
30"		100.0
36"		100.0
42"		85.2
24"	90"	120.0
30"		100.0
36"		96.8
42"		80.3
24"	96"	120.0
30"		100.0
36"		92.5
24"	102"	100.0
30"		100.0
36"		88.2
24"	108"	100.0
30"		100.0
36"		84.7
24"	114"	100.0
30"		100.0
24"	120"	100.0
30"		100.0

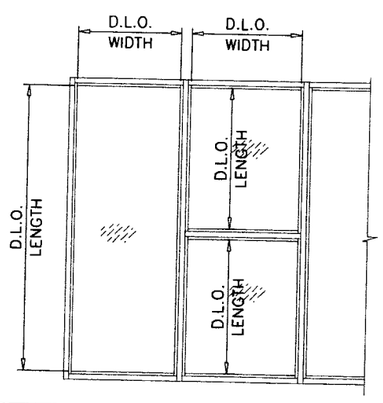

VALUES SHOWN ABOVE ARE MAXIMUM DAYLITE OPENING DIMS. FOR GLASS.
SEE MULLION CHARTS FOR MULLION CAPACITY.

GLASS DESIGN LOAD CAPACITY – PSF		
NOMINAL DIMS.		GLASS TYPE 'B'
D.L.O. WIDTH	D.L.O. LENGTH	EXT.(+) & INT.(–)
24"	66"	120.0
30"		120.0
36"		120.0
42"		120.0
48"		120.0
54"		120.0
60"		120.0
24"	72"	120.0
30"		120.0
36"		120.0
42"		120.0
48"		120.0
54"		120.0
60"		120.0
24"	78"	120.0
30"		120.0
36"		120.0
42"		120.0
48"		120.0
54"		120.0
60"		120.0
24"	84"	120.0
30"		120.0
36"		120.0
42"		120.0
48"		120.0
54"		120.0
24"	90"	120.0
30"		120.0
36"		120.0
42"		120.0
48"		120.0
54"		120.0
24"	96"	120.0
30"		120.0
36"		120.0
42"		120.0
48"		120.0
24"	102"	120.0
30"		120.0
36"		120.0
42"		120.0
48"		120.0
24"	108"	120.0
30"		120.0
36"		120.0
42"		120.0
24"	114"	120.0
30"		120.0
36"		120.0
42"		120.0
24"	120"	120.0
30"		120.0
36"		120.0

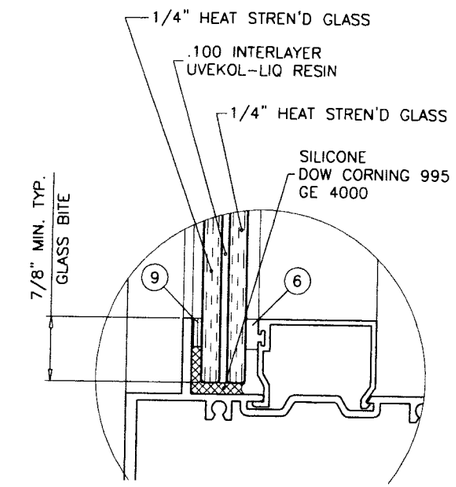

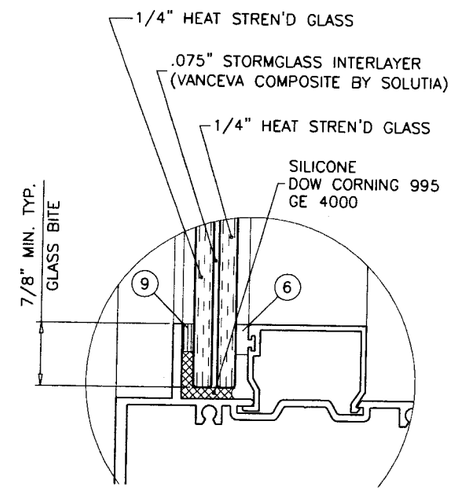

GLASS TYPE 'B'

NOTE:
GLASS CAPACITIES ON THIS SHEET ARE BASED ON ASTM E1300-02/04 (3 SEC. GUSTS).

Engr: JAVAD AHMAD
CIVIL
FLA. PE # 70592
C.A.N. 3538

MAR 29 2010

PRODUCT REVISED
as complying with the Florida Building Code
Acceptance No. 09-1109.07
Expiration Date AUG. 4, 2015
By Manuel Cruz
Miami Dade Product Control Division

AL-FAROOQ CORPORATION
ENGINEERS & PRODUCT DEVELOPMENT
1235 S.W. 87 AVE
MIAMI, FLORIDA 33174
TEL. (305) 264-8100 FAX. (305) 262-6978

STORE\W05-17GTE

SERIES-2046A ALUM WINDOW WALL SYSTEM (L.M.I.)

GLASSTECH ENGINEERING INC.
8321 N.W. 70TH STREET
MIAMI, FL. 33166
TEL. (305) 594-4321 FAX. (305) 599-2730

revisions:

no	date	by	description
A	10.21.09		UPDATED FOR 2007 FBC

date: 04-08-05
scale: 1/2" = 1"
dr. by: HAMID
chk. by:

drawing no.
W05-17

sheet 2 of 7

MULLION LOAD CAPACITY - PSF
WITHOUT INTERMEDIATE HORIZONTALS

NOMINAL DIMS.		WITHOUT REINFORCING	ST-1 REINFORCING	ST-2 REINFORCING	ST-3 REINFORCING
WIDTH (W)	FRAME HEIGHT	EXT.(+) INT.(-)	EXT.(+) INT.(-)	EXT.(+) INT.(-)	EXT.(+) INT.(-)
24"	72"	100.0	120.0	120.0	120.0
30"		100.0	120.0	120.0	120.0
36"		100.0	120.0	120.0	120.0
42"		100.0	120.0	120.0	120.0
48"		100.0	120.0	120.0	120.0
54"		100.0	120.0	120.0	120.0
60"		100.0	120.0	120.0	120.0
24"	78"	100.0	120.0	120.0	120.0
30"		100.0	120.0	120.0	120.0
36"		100.0	120.0	120.0	120.0
42"		100.0	120.0	120.0	120.0
48"		100.0	120.0	120.0	120.0
54"		100.0	120.0	120.0	120.0
60"		-	120.0	120.0	120.0
24"	84"	100.0	120.0	120.0	120.0
30"		100.0	120.0	120.0	120.0
36"		100.0	120.0	120.0	120.0
42"		100.0	120.0	120.0	120.0
48"		100.0	120.0	120.0	120.0
54"		100.0	120.0	120.0	120.0
60"		-	120.0	120.0	120.0
24"	90"	100.0	120.0	120.0	120.0
30"		100.0	120.0	120.0	120.0
36"		100.0	120.0	120.0	120.0
42"		100.0	120.0	120.0	120.0
48"		95.9	120.0	120.0	120.0
54"		-	120.0	120.0	120.0
60"		-	113.9	120.0	120.0
24"	96"	100.0	120.0	120.0	120.0
30"		100.0	120.0	120.0	120.0
36"		100.0	120.0	120.0	120.0
42"		93.2	120.0	120.0	120.0
48"		83.3	116.3	120.0	120.0
54"		-	105.9	120.0	120.0
60"		-	98.0	116.6	120.0
24"	102"	-	120.0	120.0	120.0
30"		-	120.0	120.0	120.0
36"		-	120.0	120.0	120.0
42"		-	114.4	120.0	120.0
48"		-	101.9	120.0	120.0
54"		-	92.6	110.1	120.0
24"	108"	-	120.0	120.0	120.0
30"		-	120.0	120.0	120.0
36"		-	116.7	120.0	120.0
42"		-	101.4	120.0	120.0
48"		-	90.2	107.2	120.0
24"	114"	-	120.0	120.0	120.0
30"		-	120.0	120.0	120.0
36"		-	104.4	120.0	120.0
42"		-	90.6	107.7	120.0
48"		-	80.4	95.6	108.4
24"	120"	-	120.0	120.0	120.0
30"		-	111.7	120.0	120.0
36"		-	93.9	111.7	120.0
42"		-	81.4	96.8	109.7
48"		-	72.1	85.8	97.2

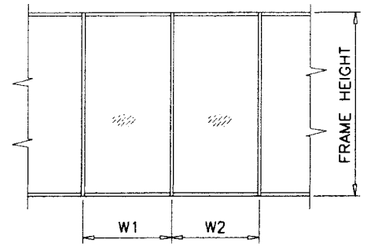

$$\text{WIDTH (W)} = \frac{W1 + W2}{2}$$

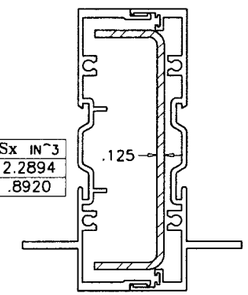

	Ix IN^4	Sx IN^3
ALUMINUM	6.2048	2.2894
STEEL	1.8955	.8920
TOTAL Ix ALUM + Ix STL X 2.9	11.7018	

ST-1

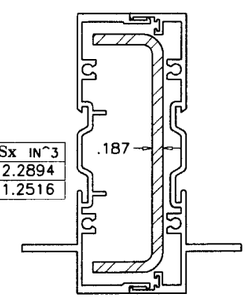

	Ix IN^4	Sx IN^3
ALUMINUM	6.2048	2.2894
STEEL	2.6597	1.2516
TOTAL Ix ALUM + Ix STL X 2.9	13.9179	

ST-2

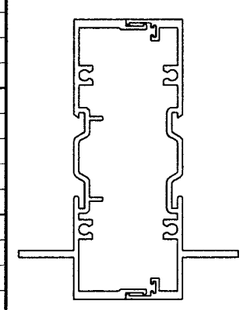

	Ix IN^4	Sx IN^3
ALUM	6.2048	2.2894

MULLION W/O REINFORCING

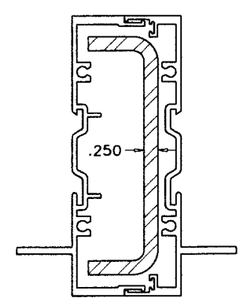

ST-3

	Ix IN^4	Sx IN^3
ALUMINUM	6.2048	2.2894
STEEL	3.3026	1.5542
TOTAL Ix ALUM + Ix STL X 2.9	15.7823	

MULLION W/ REINFORCING

MULLION LOAD CAPACITY - PSF
WITH INTERMEDIATE HORIZONTALS

NOMINAL DIMS.		WITHOUT REINFORCING	ST-1 REINFORCING	ST-2 REINFORCING	ST-3 REINFORCING
WIDTH (W)	FRAME HEIGHT	EXT.(+) INT.(-)	EXT.(+) INT.(-)	EXT.(+) INT.(-)	EXT.(+) INT.(-)
24"	72"	100.0	120.0	120.0	120.0
30"		100.0	120.0	120.0	120.0
36"		100.0	120.0	120.0	120.0
42"		100.0	120.0	120.0	120.0
48"		100.0	120.0	120.0	120.0
54"		100.0	120.0	120.0	120.0
60"		100.0	120.0	120.0	120.0
24"	78"	100.0	120.0	120.0	120.0
30"		100.0	120.0	120.0	120.0
36"		100.0	120.0	120.0	120.0
42"		100.0	120.0	120.0	120.0
48"		100.0	120.0	120.0	120.0
54"		100.0	120.0	120.0	120.0
60"		-	120.0	120.0	120.0
24"	84"	100.0	120.0	120.0	120.0
30"		100.0	120.0	120.0	120.0
36"		100.0	120.0	120.0	120.0
42"		100.0	120.0	120.0	120.0
48"		100.0	120.0	120.0	120.0
54"		100.0	120.0	120.0	120.0
60"		-	111.6	120.0	120.0
24"	90"	100.0	120.0	120.0	120.0
30"		100.0	120.0	120.0	120.0
36"		100.0	120.0	120.0	120.0
42"		100.0	120.0	120.0	120.0
48"		97.1	120.0	120.0	120.0
54"		-	108.0	120.0	120.0
60"		-	97.2	115.6	120.0
24"	96"	100.0	120.0	120.0	120.0
30"		100.0	120.0	120.0	120.0
36"		100.0	120.0	120.0	120.0
42"		91.4	120.0	120.0	120.0
48"		80.0	106.8	120.0	120.0
54"		-	94.9	112.9	120.0
60"		-	85.4	101.6	115.2
24"	102"	-	120.0	120.0	120.0
30"		-	120.0	120.0	120.0
36"		-	120.0	120.0	120.0
42"		-	108.1	120.0	120.0
48"		-	94.6	112.5	120.0
54"		-	84.1	100.0	113.4
24"	108"	-	120.0	120.0	120.0
30"		-	120.0	120.0	120.0
36"		-	112.5	120.0	120.0
42"		-	96.5	114.7	120.0
48"		-	84.4	100.4	113.8
24"	114"	-	120.0	120.0	120.0
30"		-	120.0	120.0	120.0
36"		-	101.0	120.0	120.0
42"		-	86.6	103.0	116.8
48"		-	75.7	90.1	102.2
24"	120"	-	120.0	120.0	120.0
30"		-	109.4	120.0	120.0
36"		-	91.1	108.4	120.0
42"		-	78.1	92.9	105.4
48"		-	68.4	81.3	92.2

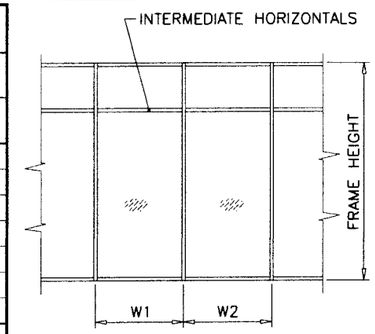

$$\text{WIDTH (W)} = \frac{W1 + W2}{2}$$

PRODUCT REVIEWED
as complying with the Florida
Building Code
Acceptance No. 09-1109.02
Expiration Date AUG. 4, 2015
By Manuel Perez
Miami-Dade Product Control
Division

Engr: JAVAD AHMAD
CIVIL
FLA. PE # 70592
C.A.N. 3538

MAR 29 2010

AL-FAROOQ CORPORATION
ENGINEERS & PRODUCT DEVELOPMENT
1235 S.W. 87 AVE
MIAMI, FLORIDA 33174
TEL. (305) 264-8100 FAX. (305) 262-6978
STORE\W05-17GTE

SERIES-2046A ALUM WINDOW WALL SYSTEM (L.M.I.)

GLASSTECH ENGINEERING INC.
8321 N.W. 70TH STREET
MIAMI, FL. 33166
TEL. (305) 594-4321 FAX. (305) 599-2730

revisions:			
no	date	by	description
A	10.21.09		UPDATED FOR 2007 FBC

date: 04-08-05
scale: -
dr. by: HAMID
chk. by:

drawing no. W05-17

ANCHOR LOAD CAPACITY – PSF
EXT.(+) & INT.(–)

NOMINAL DIMS.		ANCHORS TYPE 'A'			TYPE 'B' OR 'C'	
WIDTH (W)	FRAME HEIGHT	A2	A3	A4	B2/C2	B3/C3
24"	60"	120.0	120.0	120.0	120.0	120.0
30"		120.0	120.0	120.0	120.0	120.0
36"		120.0	120.0	120.0	120.0	120.0
42"		120.0	120.0	120.0	120.0	120.0
48"		118.0	120.0	120.0	120.0	120.0
54"		120.0	120.0	120.0	120.0	120.0
60"		110.0	120.0	120.0	120.0	120.0
24"	66"	120.0	120.0	120.0	120.0	120.0
30"		120.0	120.0	120.0	120.0	120.0
36"		119.0	120.0	120.0	120.0	120.0
42"		120.0	120.0	120.0	120.0	120.0
48"		107.0	120.0	120.0	120.0	120.0
54"		111.0	120.0	120.0	120.0	120.0
60"		100.0	120.0	120.0	120.0	120.0
24"	72"	120.0	120.0	120.0	120.0	120.0
30"		120.0	120.0	120.0	120.0	120.0
36"		109.0	120.0	120.0	120.0	120.0
42"		112.0	120.0	120.0	120.0	120.0
48"		98.0	120.0	120.0	120.0	120.0
54"		102.0	116.0	120.0	120.0	120.0
60"		91.0	118.0	120.0	120.0	120.0
24"	78"	120.0	120.0	120.0	120.0	120.0
30"		120.0	120.0	120.0	120.0	120.0
36"		101.0	120.0	120.0	120.0	120.0
42"		103.0	120.0	120.0	120.0	120.0
48"		90.0	120.0	120.0	120.0	120.0
54"		94.0	107.0	120.0	120.0	120.0
60"		84.0	109.0	120.0	120.0	120.0
24"	84"	120.0	120.0	120.0	120.0	120.0
30"		112.0	120.0	120.0	120.0	120.0
36"		93.0	120.0	120.0	120.0	120.0
42"		96.0	112.0	120.0	120.0	120.0
48"		84.0	112.0	120.0	120.0	120.0
54"		87.0	100.0	120.0	120.0	120.0
60"		78.0	101.0	112.0	120.0	120.0
24"	90"	120.0	120.0	120.0	120.0	120.0
30"		105.0	120.0	120.0	120.0	120.0
36"		87.0	120.0	120.0	120.0	120.0
42"		90.0	105.0	120.0	120.0	120.0
48"		78.0	105.0	118.0	120.0	120.0
54"		81.0	93.0	116.0	120.0	120.0
60"		73.0	94.0	105.0	120.0	120.0
24"	96"	120.0	120.0	120.0	120.0	120.0
30"		98.0	120.0	120.0	120.0	120.0
36"		82.0	114.0	120.0	120.0	120.0
42"		84.0	98.0	120.0	120.0	120.0
48"		74.0	98.0	110.0	120.0	120.0
54"		76.0	87.0	109.0	120.0	120.0

ANCHOR LOAD CAPACITY – PSF
EXT.(+) & INT.(–)

NOMINAL DIMS.		ANCHORS TYPE 'A'			TYPE 'B' OR 'C'	
WIDTH (W)	FRAME HEIGHT	A2	A3	A4	B2/C2	B3/C3
24"	102"	115.0	120.0	120.0	120.0	120.0
30"		92.0	120.0	120.0	120.0	120.0
36"		77.0	108.0	120.0	120.0	120.0
42"		79.0	92.0	119.0	120.0	120.0
48"		69.0	92.0	104.0	120.0	120.0
54"		72.0	82.0	102.0	120.0	120.0
24"	108"	109.0	120.0	120.0	120.0	120.0
30"		87.0	120.0	120.0	120.0	120.0
36"		73.0	102.0	120.0	120.0	120.0
42"		75.0	87.0	112.0	120.0	120.0
48"		65.0	87.0	98.0	120.0	120.0
54"		68.0	–	–	120.0	120.0
24"	114"	103.0	120.0	120.0	120.0	120.0
30"		83.0	116.0	120.0	120.0	120.0
36"		69.0	96.0	120.0	120.0	120.0
42"		71.0	83.0	106.0	120.0	120.0
48"		62.0	83.0	93.0	117.0	120.0
24"	120"	98.0	120.0	120.0	120.0	120.0
30"		78.0	110.0	120.0	120.0	120.0
36"		65.0	91.0	118.0	120.0	120.0
42"		67.0	78.0	101.0	120.0	120.0
48"		59.0	78.0	88.0	112.0	120.0

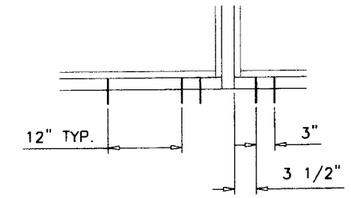

A2, B2, C2

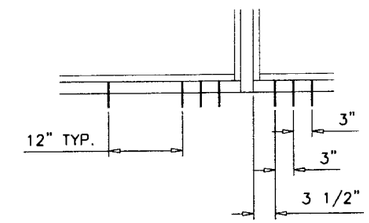

A3, B3, C3

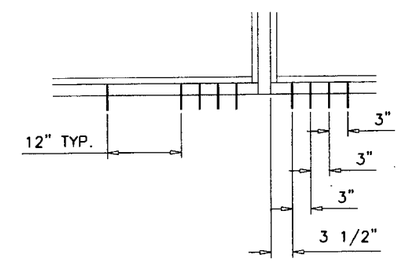

A4

ANCHORS TYPES: SEE SHEET 5 FOR DESCRIPTION

A2 = (2) ANCHORS TYPE 'A' AT EACH SIDE OF MULLION
A3 = (3) ANCHORS TYPE 'A' AT EACH SIDE OF MULLION
A4 = (4) ANCHORS TYPE 'A' AT EACH SIDE OF MULLION

B2 = (2) ANCHORS TYPE 'B' AT EACH SIDE OF MULLION
B3 = (3) ANCHORS TYPE 'B' AT EACH SIDE OF MULLION

C2 = (2) ANCHORS TYPE 'C' AT EACH SIDE OF MULLION
C3 = (3) ANCHORS TYPE 'C' AT EACH SIDE OF MULLION

ALL OTHER ANCHORS TO BE SPACED AS PER ELEVATION.

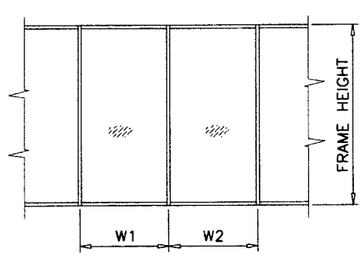

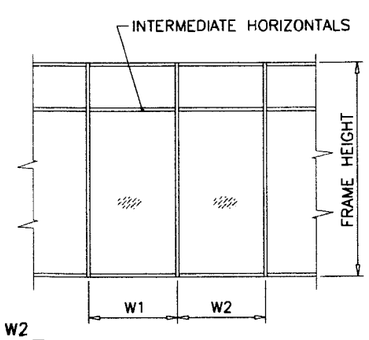

$$\text{WIDTH (W)} = \frac{W1 + W2}{2}$$

Engr: JAVAD AHMAD
CIVIL
FLA. PE # 70592
C.A.N. 3538

MAR 29 2010

PRODUCT REVISED
as complying with the Florida Building Code
Acceptance No. 09-1109.02
Expiration Date AUG. 4, 2015
By Manuel Perez
Miami-Dade Product Control Division

AL-FAROOQ CORPORATION
ENGINEERS & PRODUCT DEVELOPMENT
1235 S.W. 87 AVE
MIAMI, FLORIDA 33174
TEL. (305) 264-8100 FAX. (305) 262-6978

STORE\W05-17GTE

SERIES-2046A ALUM WINDOW WALL SYSTEM (L.M.I.)

GLASSTECH ENGINEERING INC.
8321 N.W. 70TH STREET
MIAMI, FL. 33166
TEL. (305) 594-4321 FAX. (305) 599-2730

revisions:

no	date	by	description
A	10.21.09		UPDATED FOR 2007 FBC

date: 04-08-05
scale: –
dr. by: HAMID
chk. by:

drawing no.
W05-17

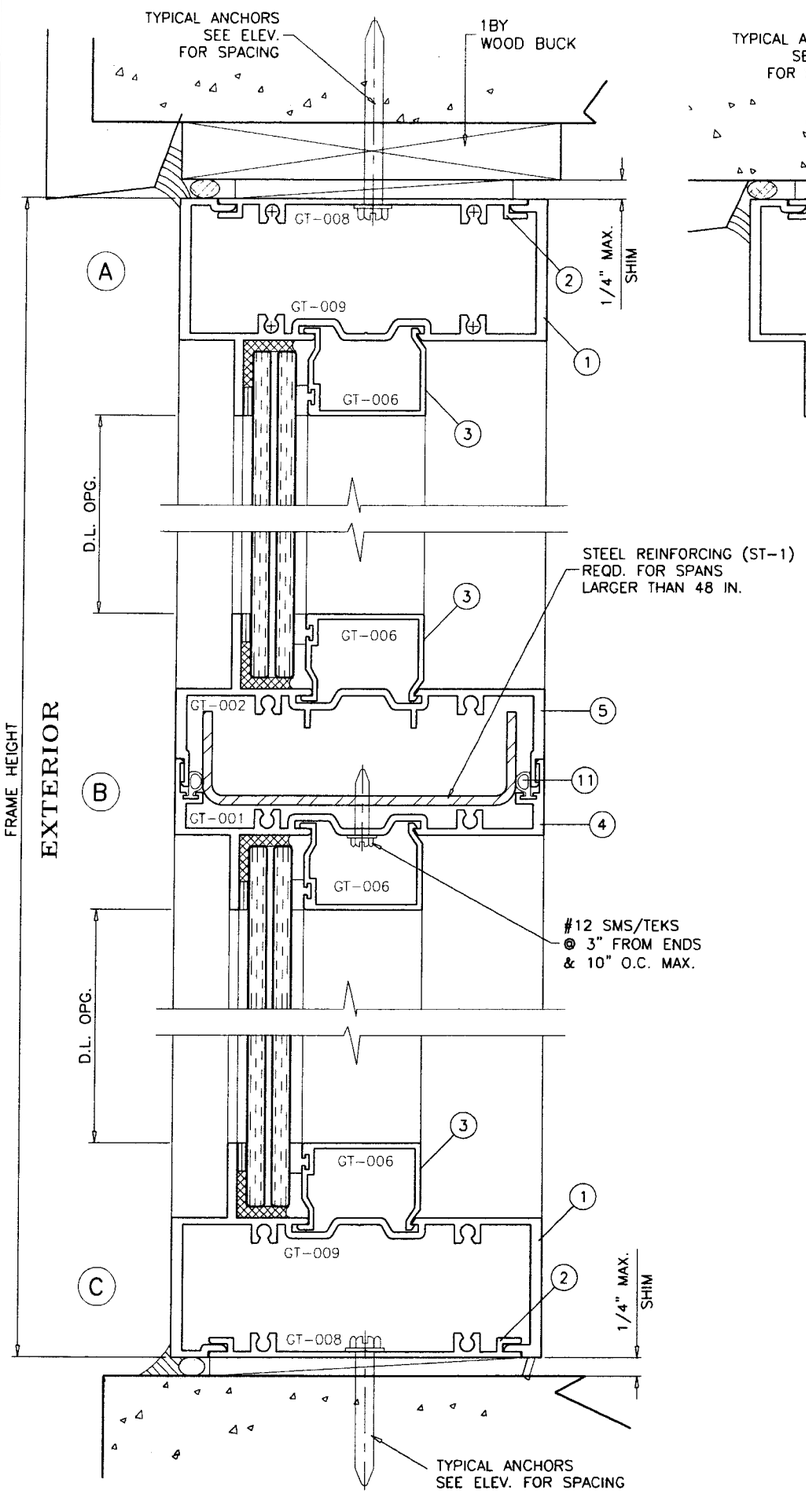

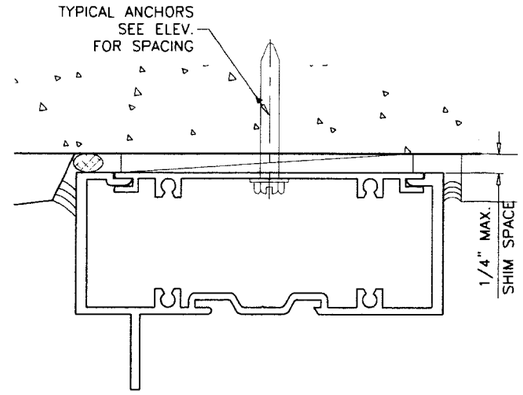

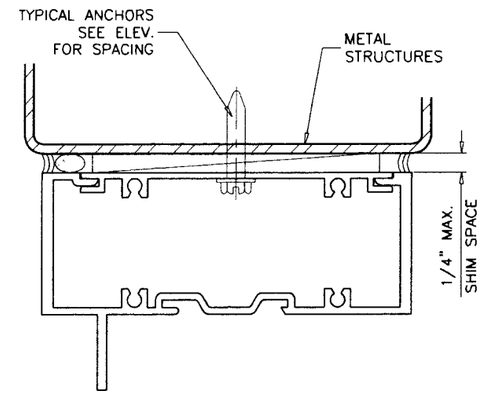

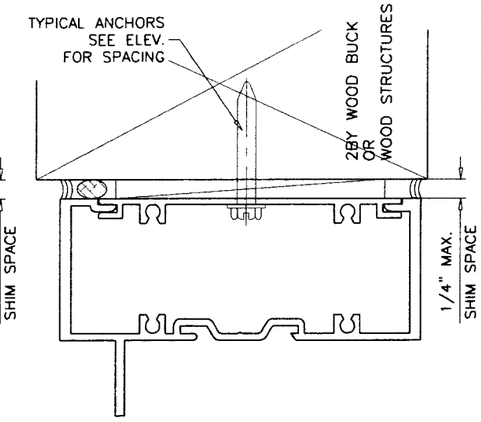

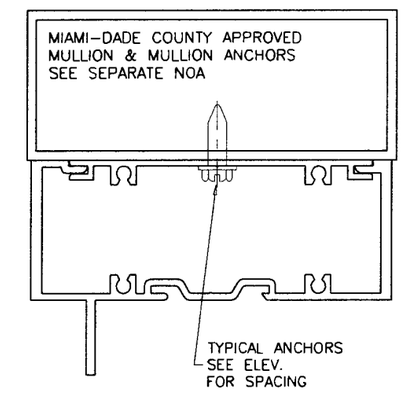

WOOD BUCKS AND METAL STRUCTURES NOT BY GLASS TECH MUST SUPPORT LOADS IMPOSED BY GLAZING SYSTEM AND TRANSFER THEM TO THE BUILDING STRUCTURE.

TYPICAL ANCHORS: SEE ELEV. FOR SPACING

1/4" DIA. ULTRACON BY 'ELCO' (Fu=177 KSI, Fy=155 KSI)

INTO 2BY WOOD BUCKS OR WOOD STRUCTURES
1-3/8" MIN. PENETRATION INTO WOOD

THRU 1BY BUCKS INTO CONC. OR MASONRY
1-1/4" MIN. EMBED INTO CONC. OR MASONRY

DIRECTLY INTO CONC. OR MASONRY
1-3/8" MIN. EMBED INTO CONCRETE
1-1/4" MIN. EMBED INTO MASONRY

1/4" DIA. TEKS OR SELF DRILLING SCREWS (GRADE 5 CRS)

INTO METAL STRUCTURES

STEEL : 12 GA. MIN. (Fy = 36 KSI MIN.)
ALUMINUM : 1/8" THK. MIN. (6063-T5 MIN.)
(STEEL IN CONTACT WITH ALUMINUM TO BE PLATED OR PAINTED)

#14 SMS OR SELF DRILLING SCREWS (GRADE 2 CRS)

INTO MIAMI-DADE COUNTY APPROVED MULLIONS (1/8" THK. MIN.)
(NO SHIM SPACE)

TYPICAL EDGE DISTANCE

INTO CONCRETE AND MASONRY = 2" MIN.
INTO WOOD STRUCTURE = 1" MIN.
INTO METAL STRUCTURE = 3/4" MIN.

CONCRETE AT HEAD, SILL OR JAMBS f'c = 3000 PSI MIN.
C-90 HOLLOW/FILLED BLOCK AT JAMBS f'm = 2000 PSI MIN.

SEALANTS:

ALL FRAME CORNERS SEALED WITH JOINT SEALANT.

Engr: JAVAD AHMAD
CIVIL
FLA. PE # 70592
C.A.N. 3538

MAR 29 2010

PRODUCT REVIEWED
as complying with the Florida
Building Code
Acceptance No. 09-1109.02
Expiration Date Aug. 4, 2015
By Manuel Perez
Miami-Dade Product Control
Division

AL-FAROOQ CORPORATION
ENGINEERS & PRODUCT DEVELOPMENT
1235 S.W. 87 AVE
MIAMI, FLORIDA 33174
TEL. (305) 264-8100 FAX. (305) 262-6978
STORE\W05-17GTE

SERIES-2046A ALUM WINDOW WALL SYSTEM (L.M.I.)

GLASSTECH ENGINEERING INC.
8321 N.W. 70TH STREET
MIAMI, FL. 33166
TEL. (305) 594-4321 FAX. (305) 599-2730

revisions:

no	date	by	description
A	10.21.09		UPDATED FOR 2007 FBC

date: 04-08-05
scale: 1/2" = 1"
dr. by: HAMID
chk. by:

drawing no.
W05-17

sheet 5 of 7

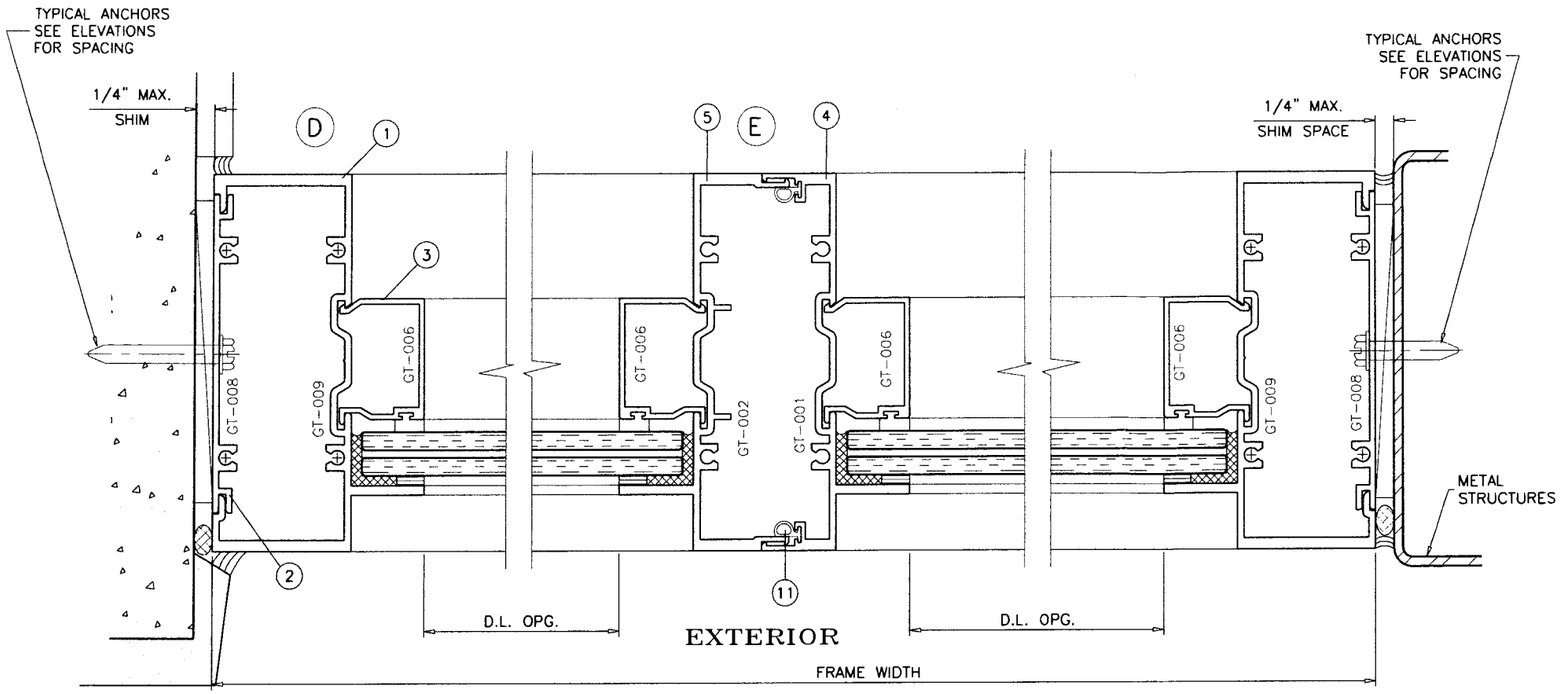

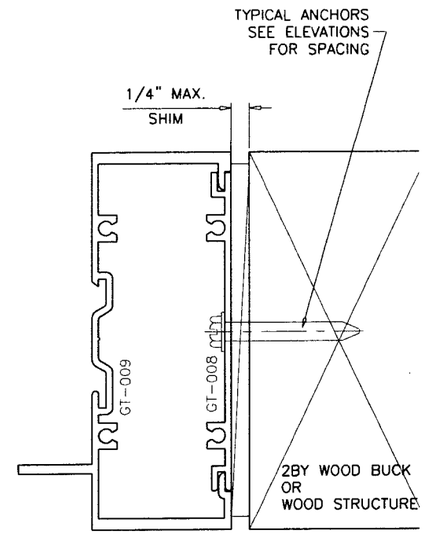

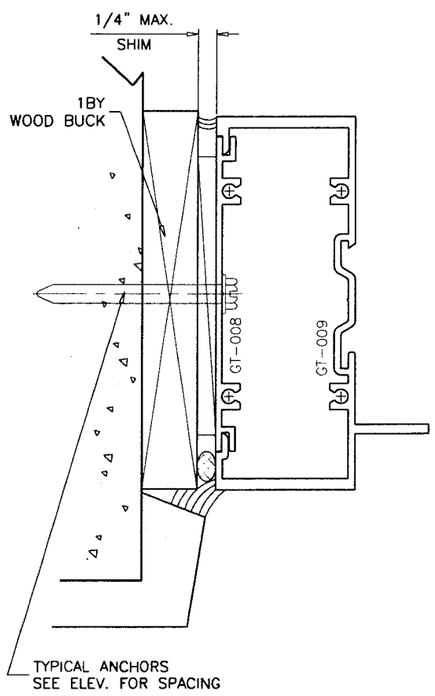

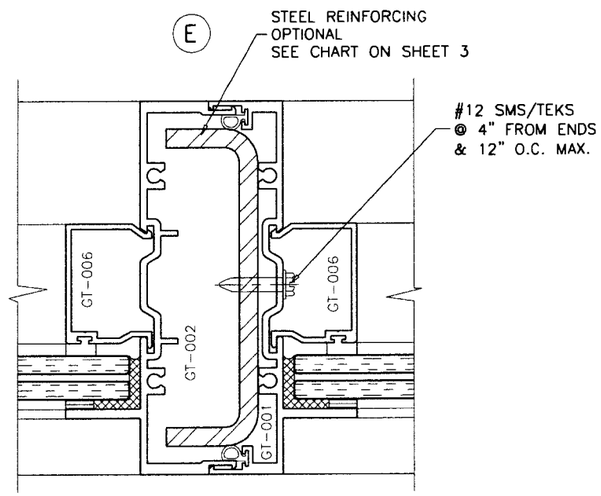

Engr: JAVAD AHMAD
CIVIL
FLA. PE # 70592
C.A.N. 3538

MAR 29 2010

PRODUCT REVISED
as complying with the Florida
Building Code
Acceptance No. 09-1109.02
Expiration Date AUG. 4, 2015
By Manuel Perez
Miami-Dade Product Control
Division

AL-FAROOQ CORPORATION
ENGINEERS & PRODUCT DEVELOPMENT
1235 S.W. 87 AVE
MIAMI, FLORIDA 33174
TEL. (305) 264-8100 FAX. (305) 262-6978
STORE\W05-17GTE

SERIES-2046A ALUM WINDOW WALL SYSTEM (L.M.I.)

GLASSTECH ENGINEERING INC.
8321 N.W. 70TH STREET
MIAMI, FL. 33166
TEL. (305) 594-4321 FAX. (305) 599-2730

revisions:

no	date	by	description
A	10.21.09		UPDATED FOR 2007 FBC

date: 04-08-05
scale: 1/2" = 1"
dr. by: HAMID
chk. by:

drawing no.
W05-17

sheet 6 of 7

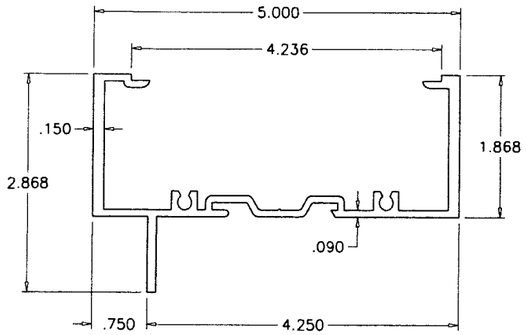

1 FRAME HEAD/SILL/JAMB

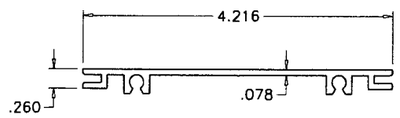

2 FLAT POCKET FILLER

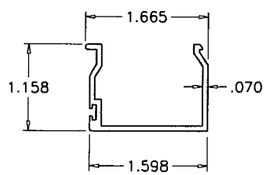

3 GLAZING STOP

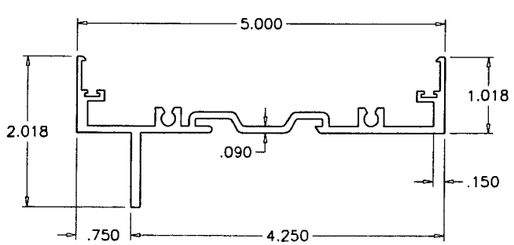

4 FEMALE FRAME

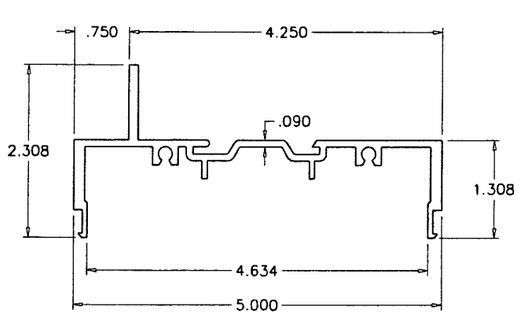

5 MALE FRAME

ITEM No.	PART NUMBER	QUANTITY	DESCRIPTION	MATERIAL	MANF./SUPPLIER/REMARKS
1	GT-009	AS REQD.	HEAD, SILL AND JAMB FRAME	6063-T6	-
2	GT-008	AS REQD.	FLAT POCKET FILLER	6063-T6	-
3	GT-006	AS REQD.	GLAZING BEAD	6063-T5	-
4	GT-001	AS REQD.	FEMALE FRAME	6063-T6	-
5	GT-002	AS REQD.	MALE FRAME	6063-T6	-
6	TR-427N	AS REQD.	GLAZING GASKET	NEOPRENE	TREMCO
8	995/4000	AS REQD.	GLAZING COMPOUND	SILICONE	DOW CORNING/GE
9	V2204	AS REQD.	GLAZING TAPE (1/8" X 3/8")	-	NORTON
10	#12 X 1-1/2"	AS REQD.	FRAME ASSEMBLY SCREWS	-	SMS OR SELF DRILLING
11	-	AS REQD.	BULB VINYL	-	-

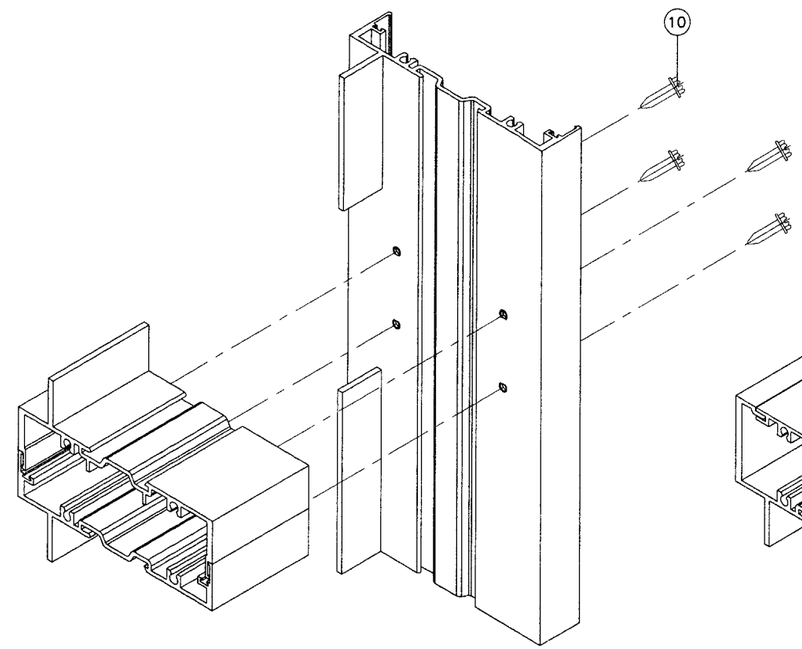

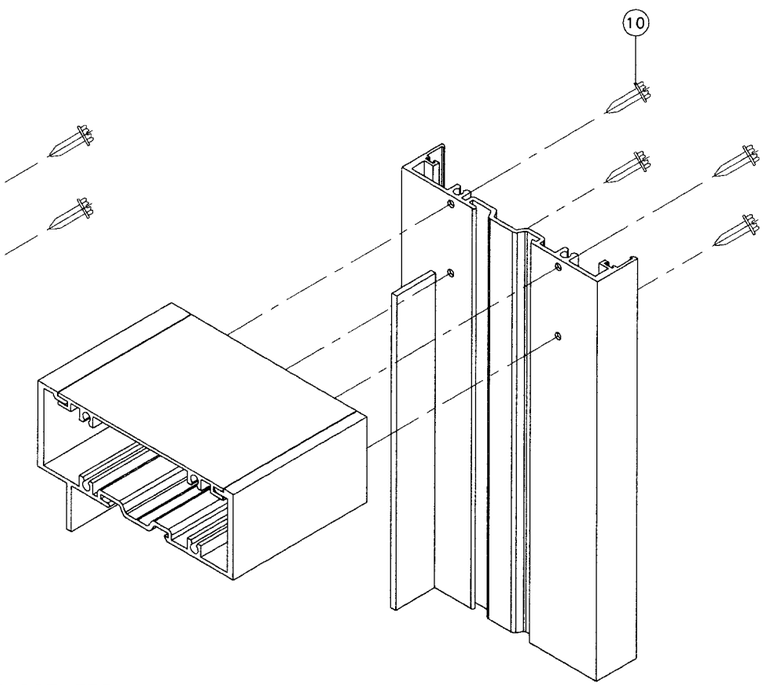

FRAME CORNERS

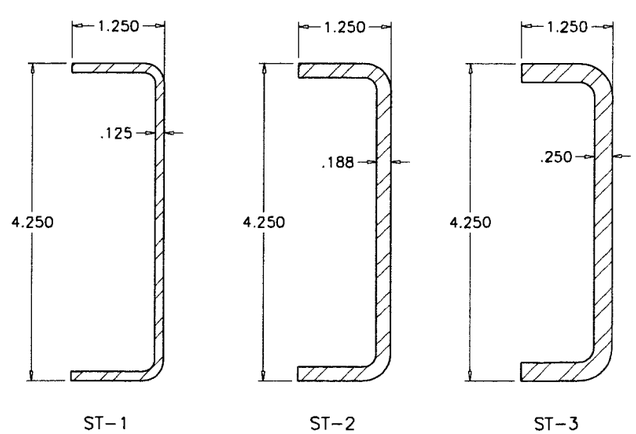

11 STEEL REINFORCING
36 KSI MIN.

Engr: JAVAD AHMAD
CIVIL
FLA. PE # 70592
C.A.N. 3538

MAR 29 2010

PRODUCT REVISED
as complying with the Florida
Building Code
Acceptance No. 09-1109.02
Expiration Date AUG. 4, 2015
By Manuel Sera
State Product Control
Division

AL-FAROOQ CORPORATION
ENGINEERS & PRODUCT DEVELOPMENT
1235 S.W. 87 AVE
MIAMI, FLORIDA 33174
TEL. (305) 264-8100 FAX. (305) 262-6978

STORE\W05-17GTE

SERIES-2046A ALUM WINDOW WALL SYSTEM (L.M.I.)

GLASSTECH ENGINEERING INC.
8321 N.W. 70TH STREET
MIAMI, FL. 33166
TEL. (305) 594-4321 FAX. (305) 599-2730

revisions:

no	date	by	description
A	10.21.09		UPDATED FOR 2007 FBC

date: 04-08-05
scale: 1/2" = 1"
dr. by: HAMID
chk. by:

drawing no.
W05-17

sheet 7 of 7