MIAMI-DADE COUNTY
BUILDING CODE COMPLIANCE OFFICE (BCCO)
PRODUCT CONTROL DIVISION

MIAMI–DADE COUNTY, FLORIDA
METRO–DADE FLAGLER BUILDING
140 WEST FLAGLER STREET, SUITE 1107
MIAMI, FLORIDA 33130–1563
(305) 375–2902 FAX (305) 372–6339
www.miamidade.gov/buildingcode

NOTICE OF ACCEPTANCE (NOA)

Continental Glass Systems, Inc.
325 West 74 Place
Hialeah, FL 33014

SCOPE:

This NOA is being issued under the applicable rules and regulations governing the use of construction materials. The documentation submitted has been reviewed by Miami–Dade County Product Control Division and accepted by the Board of Rules and Appeals (BORA) to be used in Miami–Dade County and other areas where allowed by the Authority Having Jurisdiction (AHJ).

This NOA shall not be valid after the expiration date stated below. The Miami–Dade County Product Control Division (In Miami–Dade County) and/or the AHJ (in areas other than Miami–Dade County) reserve the right to have this product or material tested for quality assurance purposes. If this product or material fails to perform in the accepted manner, the manufacturer will incur the expense of such testing and the AHJ may immediately revoke, modify, or suspend the use of such product or material within their jurisdiction. BORA reserves the right to revoke this acceptance, if it is determined by Miami–Dade County Product Control Division that this product or material fails to meet the requirements of the applicable building code.

This product is approved as described herein, and has been designed to comply with the Florida Building Code, including the High Velocity Hurricane Zone.

DESCRIPTION: Series "5500 Picture" Aluminum Fixed Window – L.M.I.

APPROVAL DOCUMENT: Drawing No. **CGS006**, titled "Series 5500 PW", sheets 1 through 6 of 6, dated 09/16/09 with revision "**A**" dated 03/09/10, prepared by CertWORKS, LLC, signed and sealed by Kristina S. Daugherty, P. E., bearing the Miami–Dade County Product Control Approval stamp with the Notice of Acceptance number and Approval date by the Miami–Dade County Product Control Division.

MISSILE IMPACT RATING: Large and Small Missile Impact Resistant

LABELING: Each unit shall bear a permanent label with the manufacturer's name or logo, city, state and following statement: "Miami–Dade County Product Control Approved", unless otherwise noted herein.

RENEWAL of this NOA shall be considered after a renewal application has been filed and there has been no change in the applicable building code negatively affecting the performance of this product.

TERMINATION of this NOA will occur after the expiration date or if there has been a revision or change in the materials, use, and/or manufacture of the product or process. Misuse of this NOA as an endorsement of any product, for sales, advertising or any other purposes shall automatically terminate this NOA. Failure to comply with any section of this NOA shall be cause for termination and removal of NOA.

ADVERTISEMENT: The NOA number preceded by the words Miami–Dade County, Florida, and followed by the expiration date may be displayed in advertising literature. If any portion of the NOA is displayed, then it shall be done in its entirety.

INSPECTION: A copy of this entire NOA shall be provided to the user by the manufacturer or its distributors and shall be available for inspection at the job site at the request of the Building Official.

This NOA consists of this page 1 and evidence page E–1, as well as approval document mentioned above.

The submitted documentation was reviewed by **Jaime D. Gascon, P. E.**

MIAMI-DADE COUNTY APPROVED

J. Gascon
3/17/10

Continental Glass Systems, Inc.

NOTICE OF ACCEPTANCE: EVIDENCE SUBMITTED

A. DRAWINGS

1. Manufacturer's die drawings and sections.
2. Drawing No. **CGS006**, titled "Series 5500 PW", sheets 1 through 6 of 6, dated 09/16/09 with revision "**A**" dated 03/09/10, prepared by CertWORKS, LLC, signed and sealed by Kristina S. Daugherty, P. E.

B. TESTS

1. Test reports on: 1) Air Infiltration Test, per FBC, TAS 202–94
   2) Uniform Static Air Pressure Test, Loading per FBC TAS 202–94
   3) Water Resistance Test, per FBC, TAS 202–94
   4) Large Missile Impact Test per FBC, TAS 201–94
   5) Cyclic Wind Pressure Loading per FBC, TAS 203–94

   along with marked–up drawings and installation diagram of picture windows, prepared by Fenestration Testing Laboratory, Inc., Test Report No. **FTL 5976**, dated August 15, 2009, signed and sealed by Julio E. Gonzalez, P. E.

C. CALCULATIONS

1. Anchor calculations and structural analysis, complying with FBC–2007, dated 11/23/096, prepared by CertWorks, LLC, dated 03/09/10, signed and sealed by Kristina S. Daugherty, P.E.
   Complies with ASTM E1300–98/ 04

D. QUALITY ASSURANCE

1. Miami–Dade Building Code Compliance Office (BCCO).

E. MATERIAL CERTIFICATIONS

1. Notice of Acceptance No. **08–0520.08** issued to Solutia Inc. for their "**Vanceva Composites Glass Interlayer**" dated 7/17/08, expiring on 12/11/13.

F. STATEMENTS

1. Statement letter of conformance and no financial interest, dated September 23, 20097, signed and sealed by Kristina S. Daugherty, P.E.
3. Laboratory compliance letter for Test Report no. **FTL 5976**, issued by Fenestration Testing Laboratory, Inc., dated August 26, 2009, signed and sealed by Julio E. Gonzalez, P. E.
9. Proposal issued by BCCO, dated May 27, 2009, signed by Renzo Narciso.

G. OTHERS

1. None.

Jaime D. Gascon, P.E.
Chief, Product Control Division
NOA No. 09–1202.08
Expiration Date: April 07, 2015
Approval Date: April 07, 2010

CONTINENTAL GLASS SYSTEMS

SERIES 5500 PICTURE WINDOW

INSTALLATION NOTES:

1. ONE (1) INSTALLATION ANCHORS ARE REQUIRED AT EACH ANCHOR LOCATION SHOWN.
2. THE NUMBER OF INSTALLATION ANCHORS DEPICTED IS THE MINIMUM NUMBER OF ANCHORS TO BE USED FOR PRODUCT INSTALLATION.
3. INSTALL INDIVIDUAL INSTALLATION ANCHORS WITHIN A TOLERANCE OF ±1/2 INCH OF THE DEPICTED LOCATION IN THE ANCHOR LAYOUT DETAIL (I.E., WITHOUT CONSIDERATION OF TOLERANCES). TOLERANCES ARE NOT CUMULATIVE FROM ONE INSTALLATION ANCHOR TO THE NEXT.
4. SHIM AS REQUIRED AT EACH INSTALLATION ANCHOR WITH LOAD BEARING SHIM(S). MAXIMUM ALLOWABLE SHIM STACK TO BE 1/4 INCH. SHIM WHERE SPACE OF 1/16 INCH OR GREATER OCCURS. SHIM(S) SHALL BE CONSTRUCTED OF HIGH DENSITY PLASTIC OR BETTER.
5. FOR INSTALLATION INTO WOOD FRAMING USE #14 WOOD SCREWS OF SUFFICIENT LENGTH TO ACHIEVE 1 1/2 INCH MINIMUM EMBEDMENT INTO WOOD SUBSTRATE.
6. FOR INSTALLATION THROUGH STEEL STUD USE *#14* SELF-TAPPING SCREWS PER INSTALLATION CLIP OF SUFFICIENT LENGTH TO ACHIEVE *3 THREADS* MINIMUM ENGAGEMENT INTO STEEL FRAME SUBSTRATE.
7. FOR INSTALLATION THROUGH 1X BUCK TO CONCRETE/MASONRY, OR DIRECTLY INTO CONCRETE/MASONRY, USE 1/4 INCH DIAMETER ITW TAPCONS OF SUFFICIENT LENGTH TO ACHIEVE 1 1/4 INCH MINIMUM EMBEDMENT.
8. MINIMUM EMBEDMENT AND EDGE DISTANCE EXCLUDE WALL FINISHES, INCLUDING BUT NOT LIMITED TO STUCCO, FOAM, BRICK VENEER, AND SIDING.
9. INSTALLATION ANCHORS AND ASSOCIATED HARDWARE MUST BE MADE OF CORROSION RESISTANT MATERIAL OR HAVE A CORROSION RESISTANT COATING.
10. ALL 1X AND 2X BUCKS IN CONTACT WITH MASONRY OR CONCRETE SUBSTRATES TO BE PROTECTED PER 2007 FBC, CHAPTER 2326.
11. FOR HOLLOW BLOCK AND GROUT FILLED BLOCK, DO NOT INSTALL INSTALLATION ANCHORS INTO MORTAR JOINTS. EDGE DISTANCE IS MEASURED FROM FREE EDGE OF BLOCK OR EDGE OF MORTAR JOINT INTO FACE SHELL OF BLOCK.
12. INSTALLATION ANCHORS SHALL BE INSTALLED IN ACCORDANCE WITH ANCHOR MANUFACTURER'S INSTALLATION INSTRUCTIONS, AND ANCHORS SHALL NOT BE USED IN SUBSTRATES WITH STRENGTHS LESS THAN THE MINIMUM STRENGTH SPECIFIED BY THE ANCHOR MANUFACTURER.
13. INSTALLATION ANCHOR CAPACITIES FOR PRODUCTS HEREIN ARE BASED ON SUBSTRATE MATERIALS WITH THE FOLLOWING PROPERTIES:
    A. WOOD - MINIMUM SPECIFIC GRAVITY OF 0.55.
    B. CONCRETE -MINIMUM COMPRESSIVE STRENGTH OF 2700 PSI.
    C. MASONRY - STRENGTH CONFORMANCE TO ASTM C-90, GRADE N, TYPE 1 (OR GREATER).
    D. STEEL - MIN. YIELD STRENGTH 33 KSI. MIN. WALL THICKNESS 33 MILS [20 GAUGE(0.0346")] FRAME MUST MEET THE REQUIREMENTS OF FBC SECTION 2003.8.4

GENERAL NOTES:

1. THE PRODUCT SHOWN HEREIN IS DESIGNED AND MANUFACTURED TO COMPLY WITH THE 2007 FLORIDA BUILDING CODE (FBC), INCLUDING HVHZ AND HAS BEEN EVALUATED ACCORDING TO THE FOLLOWING:
    - TAS 201-94
    - TAS 202-94
    - TAS 203-94
2. ADEQUACY OF THE EXISTING STRUCTURAL CONCRETE/MASONRY AND 2X FRAMING AS A MAIN WIND FORCE RESISTING SYSTEM CAPABLE OF WITHSTANDING AND TRANSFERRING APPLIED PRODUCT LOADS TO THE FOUNDATION IS THE RESPONSIBILITY OF THE ENGINEER OR ARCHITECT OF RECORD FOR THE PROJECT OF INSTALLATION.
3. 1X AND 2X BUCKS (WHEN USED) SHALL BE DESIGNED AND ANCHORED TO PROPERLY TRANSFER ALL LOADS TO THE STRUCTURE. BUCK DESIGN AND INSTALLATION IS THE RESPONSIBILITY OF THE ENGINEER OR ARCHITECT OF RECORD FOR THE PROJECT OF INSTALLATION.
4. THE INSTALLATION DETAILS DESCRIBED HEREIN ARE GENERIC AND MAY NOT REFLECT ACTUAL CONDITIONS FOR A SPECIFIC SITE. IF SITE CONDITIONS CAUSE INSTALLATION TO DEVIATE FROM THE REQUIREMENTS DETAILED HEREIN, A LICENSED ENGINEER OR ARCHITECT SHALL PREPARE SITE SPECIFIC DOCUMENTS FOR USE WITH THIS DOCUMENT.
5. APPROVED IMPACT PROTECTIVE SYSTEM **IS NOT REQUIRED** ON THIS PRODUCT IN AREAS REQUIRING IMPACT RESISTANCE.
6. WINDOW FRAME MATERIAL: ALUMINUM 6063-T6
7. GLASS MEETS THE REQUIREMENTS OF ASTM E 1300-04 GLASS CHARTS. SEE SHEET 6 FOR GLAZING DETAIL.

TABLE OF CONTENTS

SHEET	REVISION	SHEET DESCRIPTION
1	A	INSTALLATION & GENERAL NOTES
2	A	ELEVATIONS
3	A	ANCHOR LAYOUTS
4	A	VERTICAL SECTIONS
5	-	HORIZONTAL SECTIONS
6	A	COMPONENTS, GLAZING DETAIL & BILL OF MATERIALS

DESIGN PRESSURE RATING

SIZE	DESIGN PRESSURE	MISSLE IMPACT RATING
53" X 76" (SINGLE & MULTIPLE UNITS)	+75/-75 PSF	SMALL AND LARGE MISSILE IMPACT RATED
53" X 26" (ARCH TOP)	+75/-100 PSF	

Approved as complying with the Florida Building Code
Date 04/07/2010
NOA# 09-1102.08
Miami Dade Product Control Division
By

CONTINENTAL Glass Systems
325 W. 74TH PLACE
HIALEAH, FL 33014
PH: (305) 231-1101 FX: (305) 231-1103

TITLE: SERIES 5500 PW INSTALLATION & GENERAL NOTES

PREPARED BY:
CERTWORKS, LLC
127 W. FAIRBANKS AVE., STE. 438
WINTER PARK, FL 32789
PH: (407) 644-6957 FX: (407) 644-2366

REVISIONS

NO.	DESCRIPTION	BY	DATE
A	GENERAL COMMENTS	KMH	03.09.10

3-9-10

KRISTINA S. DAUGHERTY
FLORIDA P. E. NO. 68405
127 W. FAIRBANKS AVE., STE. 438
WINTER PARK, FL 32789
FBPE CERT. OF AUTHORIZATION NO. 28930

DATE: 09.16.09
DWN BY: GRN
CHK BY: KSD
SCALE: NTS
DWG #: CGS006
SHEET: 1 OF 6

3/9/2010 3:15 PM
p:\projects\continental glass systems\ind-p-09-0926.2 - 5500 series pw & pw arch\dwgs\cgs006 - 5500 series pw.dwg

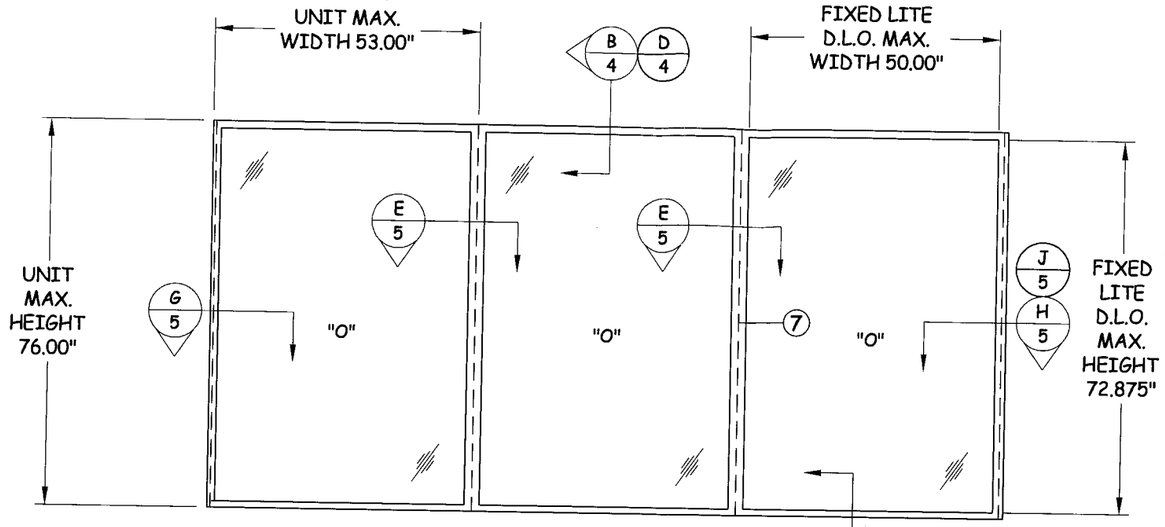

ELEVATION

MULTIPLE UNITS

+75/-75 PSF

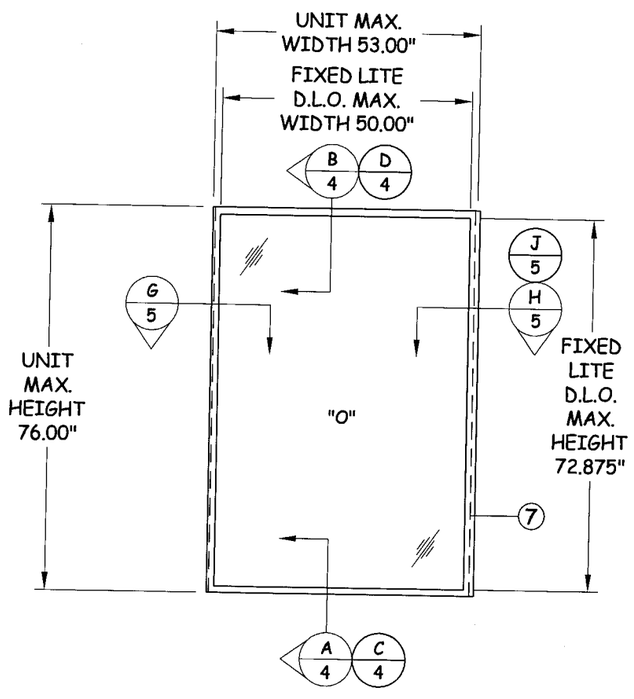

ELEVATION

SINGLE UNIT

+75/-75 PSF

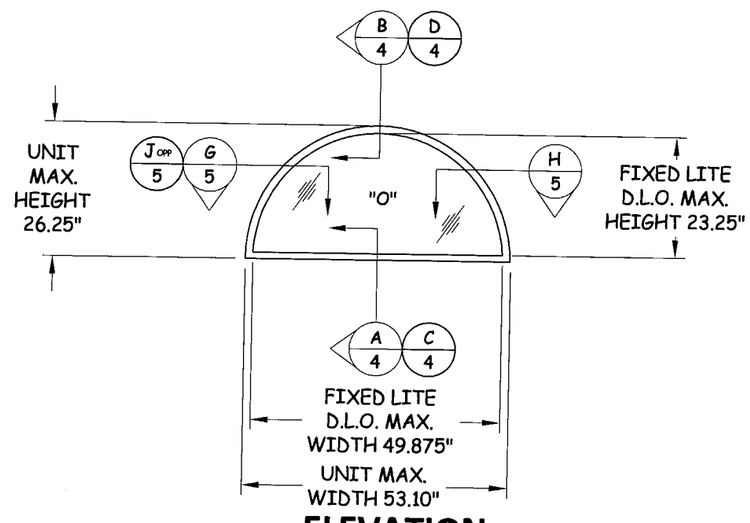

ELEVATION

ARCH UNIT

+75/-100 PSF

Approved as complying with the Florida Building Code
Date 04/07/2010
NOA# 09-1202.03
Miami-Dade Product Control Division
By

CONTINENTAL Glass Systems
325 W. 74TH PLACE
HIALEAH, FL 33014
PH: (305) 231-1101 FX: (305) 231-1103

TITLE: SERIES 5500 PW ELEVATIONS

PREPARED BY:
CERTWORKS, LLC
127 W. FAIRBANKS AVE., STE. 438
WINTER PARK, FL 32789
PH: (407) 644-6957 FX: (407) 644-2366

REVISIONS

NO.	DESCRIPTION	BY	DATE
A	GENERAL COMMENTS	KMH	03.09.10

3-9-10

KRISTINA S. DAUGHERTY
FLORIDA P. E. NO. 034155
127 W. FAIRBANKS AVE. STE. 438
WINTER PARK, FL 32789
FBPE CERT. OF AUTHORIZATION NO. 28520

DATE:	DWN BY:	CHK BY:	SCALE:
09.16.09	GRN	KSD	NTS

DWG #: CGS006

SHEET: 2 OF 6

3/9/2010 3:59 PM
p:\projects\continental glass systems\md-p-09-0526.2 - 5500 series pw & pw arch\dwgs\cgs006 - 5500 series pw.dwg

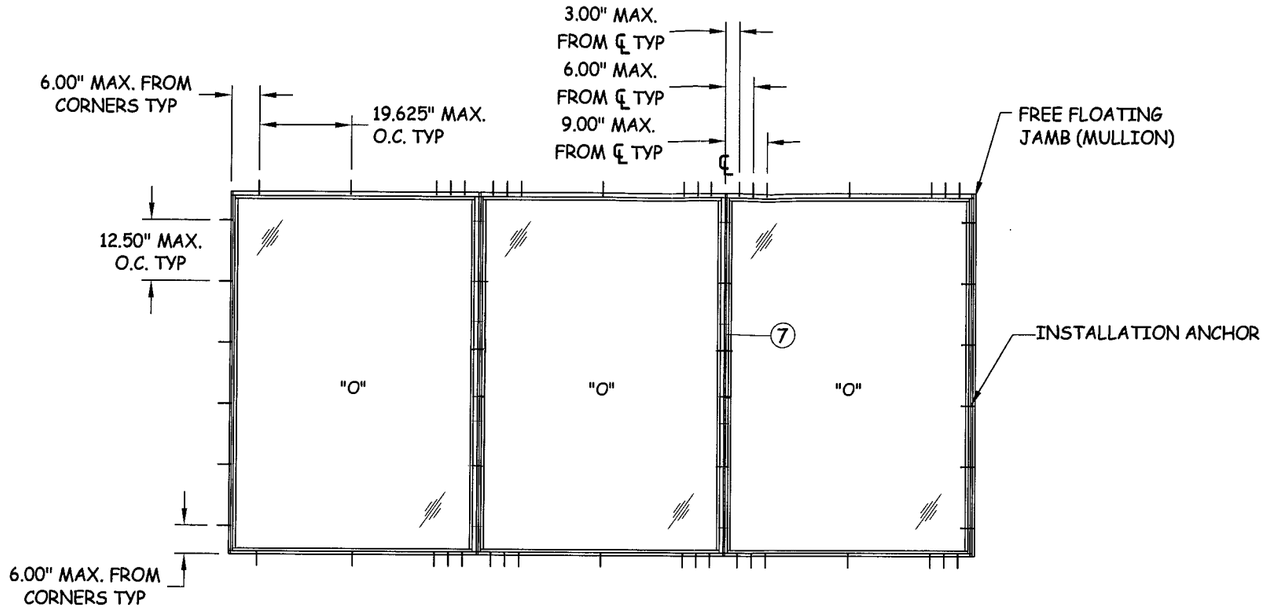

ANCHOR LAYOUT

MULTIPLE UNITS

+75/-75 PSF

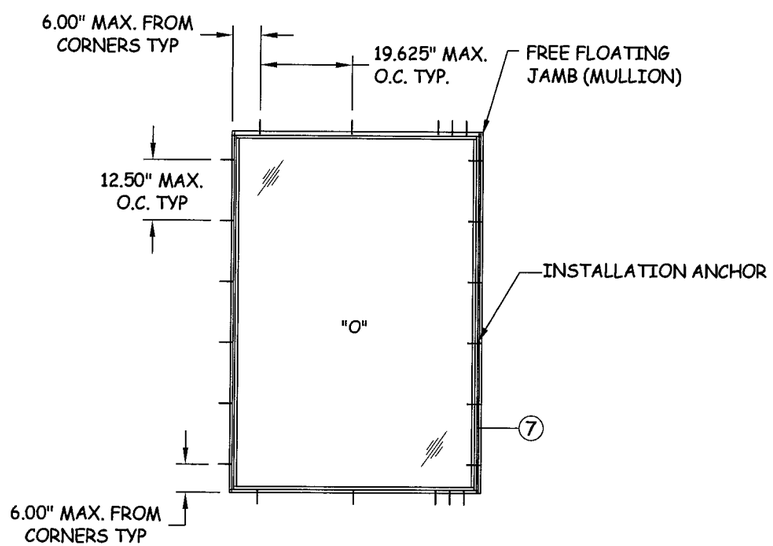

ANCHOR LAYOUT

SINGLE UNIT

+75/-75 PSF

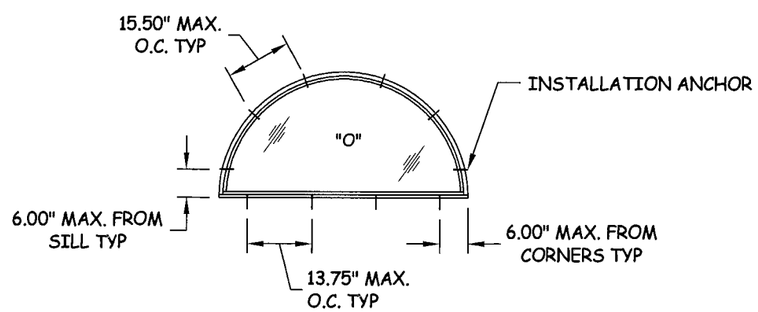

ANCHOR LAYOUT

ARCH UNIT

+75/-100 PSF

Approved as complying with the Florida Building Code
Date 04/07/2010
NOA# 09-1202.08
Miami Dade Product Control Division
By

CONTINENTAL Glass Systems
325 W. 74TH PLACE
HIALEAH, FL 33014
PH: (305) 231-1101 FX: (305) 231-1103

TITLE: SERIES 5500 PW ANCHOR LAYOUTS

PREPARED BY:
CERTWORKS, LLC
127 W. FAIRBANKS AVE., STE. 438
WINTER PARK, FL 32789
PH: (407) 644-6957 FX: (407) 644-2366

REVISIONS

NO.	DESCRIPTION	BY	DATE
A	GENERAL COMMENTS	KMH	03.09.10

3-9-10

KRISTINA S. DAUGHERTY
FLORIDA P. E. NO. 62455
127 W. FAIRBANKS AVE. STE. 438
WINTER PARK, FL 32789
FBPE CERT. OF AUTHORIZATION NO. 28520

DATE:	DWN BY:	CHK BY:	SCALE:
09.16.09	GRN	KSD	NTS

DWG #: CGS006

SHEET: 3 OF 6

3/9/2010 3:17 PM
p:\projects\continental glass systems\ind-p-09-0526.2 - 5500 series pw & pw arch\dwgs\cgs006 - 5500 series pw.dwg

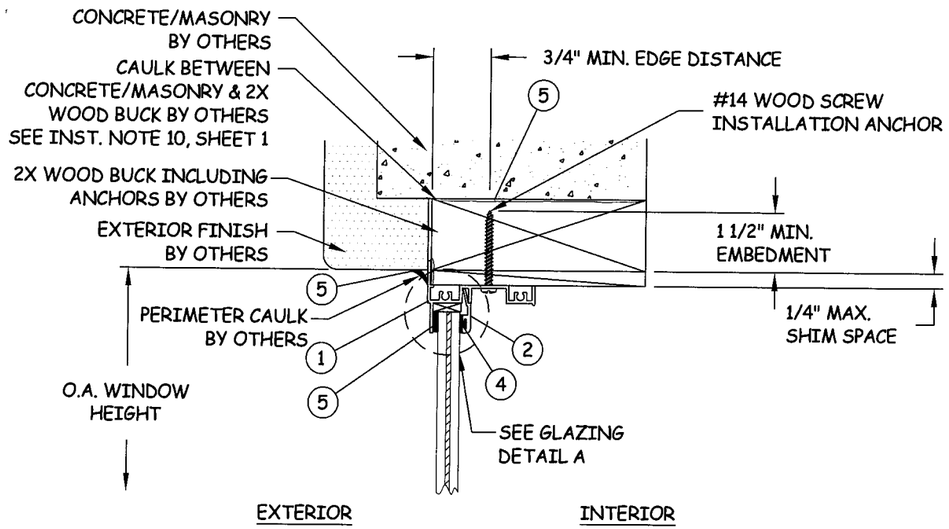

B/4 VERTICAL SECTION
HEAD - 2X WOOD BUCK

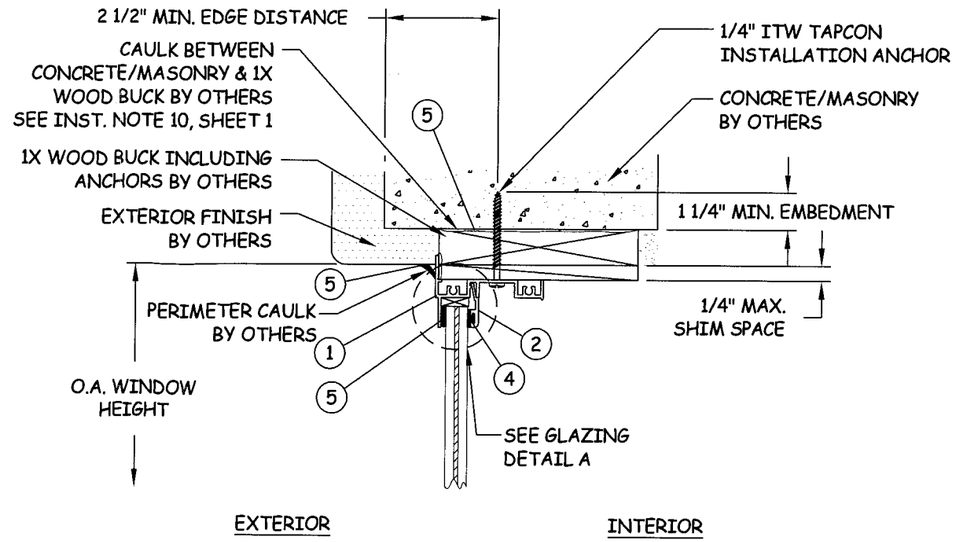

D/4 VERTICAL SECTION
HEAD - CONCRETE/MASONRY

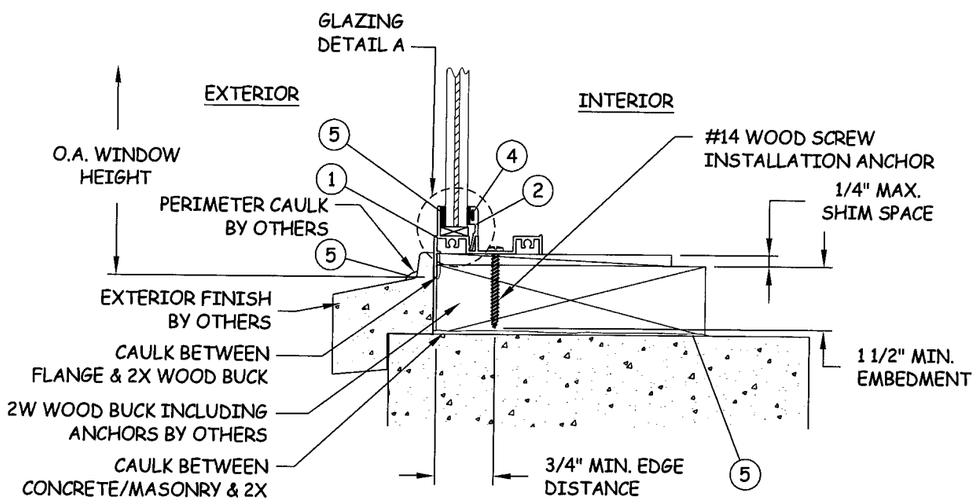

A/4 VERTICAL SECTION
SILL - 2X WOOD BUCK

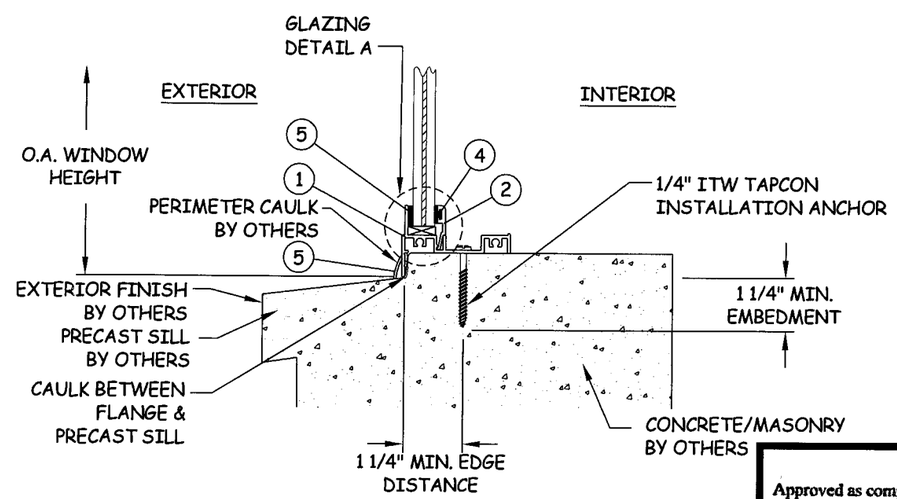

C/4 VERTICAL SECTION
SILL - CONCRETE/MASONRY

Approved as complying with the Florida Building Code
Date 04/07/2010
NOA# 09-1202.08
Miami Dade Product Control Division
By

CONTINENTAL Glass Systems
325 W. 74TH PLACE
HIALEAH, FL 33014
PH: (305) 231-1101 FX: (305) 231-1103

TITLE: SERIES 5500 PW VERTICAL SECTIONS

PREPARED BY:
CERTWORKS, LLC
127 W. FAIRBANKS AVE., STE. 438
WINTER PARK, FL 32789
PH: (407) 644-6957 FX: (407) 644-2366

REVISIONS

NO.	DESCRIPTION	BY	DATE
A	GENERAL COMMENTS	KMH	03.09.10

3-9-10

KRISTINA S. DAUGHERTY
FLORIDA P. E. NO. 66455
127 W. FAIRBANKS AVE. STE. 438
WINTER PARK, FL 32789
FBPE CERT. OF AUTHORIZATION NO. 28520

DATE:	DWN BY:	CHK BY:	SCALE:
09.16.09	GRN	KSD	NTS

DWG #: CGS006

SHEET: 4 OF 6

3/9/2010 3:17 PM
p:\projects\continental glass systems\md-p-09-0526.2 - 5500 series pw & pw arch\dwgs\cgs006 - 5500 series pw.dwg

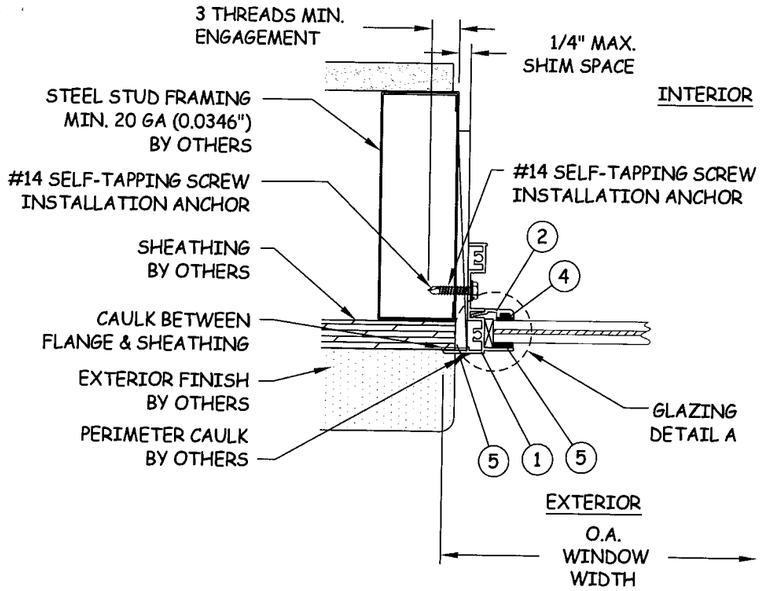

G/5 HORIZONTAL SECTION

JAMB - STEEL STUD FRAME

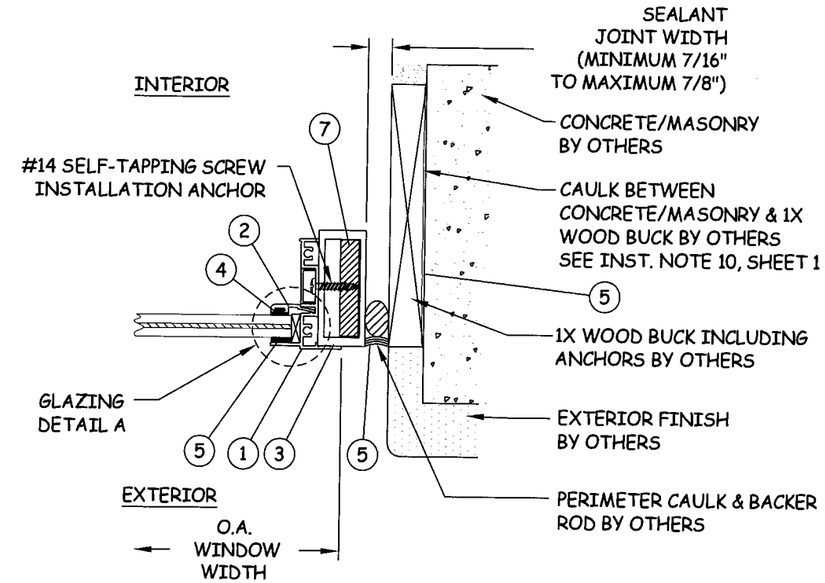

H/5 HORIZONTAL SECTION

FREE FLOATING REINFORCED JAMB

NOTES:
1. BACKER ROD DIAMETER EQUALS SEAL WIDTH X 120%
2. SEALANT DEPTH IS 7/16" (-0", +1/16") FOR SEALANT WIDTH UP TO 7/8"

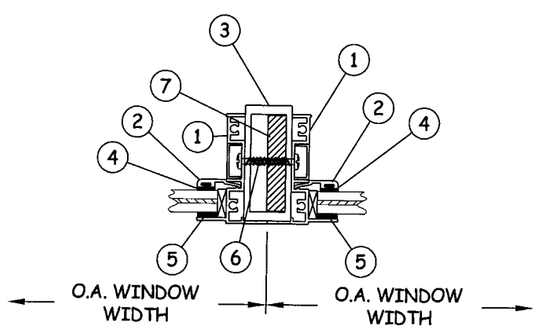

E/5 HORIZONTAL SECTION

VERTICAL REINFORCED MULLION

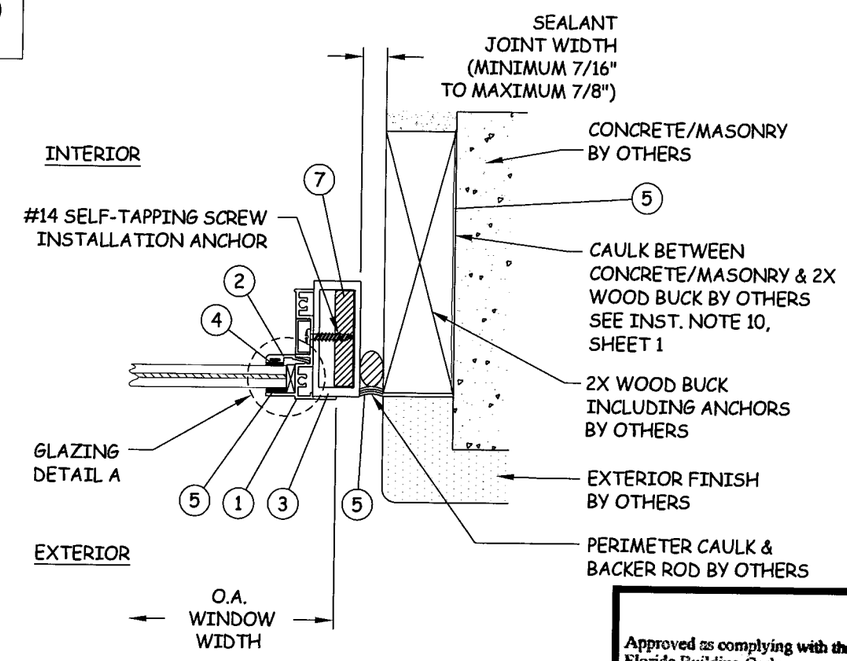

J/5 HORIZONTAL SECTION

FREE FLOATING REINFORCED JAMB

Approved as complying with the Florida Building Code
Date 04/07/2010
NOA# 09-1202.08
Miami Dade Product Control Division
By

CONTINENTAL Glass Systems
325 W. 74TH PLACE
HIALEAH, FL 33014
PH: (305) 231-1101 FX: (305) 231-1103

TITLE: SERIES 5500 PW HORIZONTAL SECTIONS

PREPARED BY: CERTWORKS, LLC
127 W. FAIRBANKS AVE., STE. 438
WINTER PARK, FL 32789
PH: (407) 644-6957 FX: (407) 644-2366

REVISIONS

NO.	DESCRIPTION	BY	DATE
A	GENERAL COMMENTS	KMH	03.09.10

3-9-10

KRISTINA S. DAUGHERTY
FLORIDA P. E. NO. 66455
127 W. FAIRBANKS AVE. STE. 438
WINTER PARK, FL 32789
FBPE CERT. OF AUTHORIZATION NO. 28520

DATE: 09.16.09
DWN BY: GRN
CHK BY: KSD
SCALE: NTS
DWG #: CGS006
SHEET: 5 OF 6

3/9/2010 3:17 PM

p:\projects\continental glass systems\md-p-09-0526.2 - 5500 series pw & pw arch\dwgs\cgs006 - 5500 series pw.dwg

1 HEAD/SILL/JAMB 5500-01
6063-T6
0.062" TYP. WALL THICKNESS

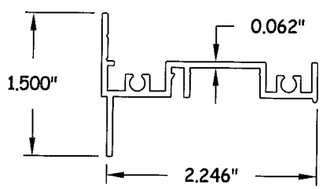

2 GLAZING BEAD 5500-08
6063-T6
0.089" TYP. WALL THICKNESS

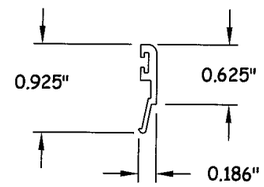

3 MULLION 5500-10
6063-T6
0.125" TYP. WALL THICKNESS

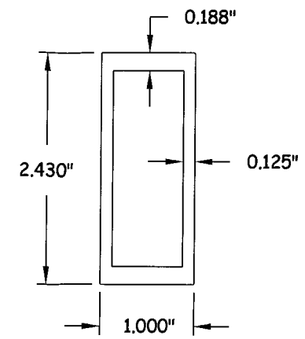

7 REINFORCEMENT
6063-T6

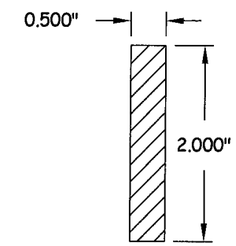

BILL OF MATERIALS				
ITEM #	PART #	DESCRIPTION	MATERIAL	MANUFACTURER
1	5500-01	HEAD/SILL/JAMB	6063-T6	CGS
2	5500-08	GLAZING BEAD	6063-T6	CGS
3	5500-10	MULLION	6063-T6	CGS
4		GLAZING SPACER	VINYL	FRANK LOWE
5		STRUCTURAL SILICONE DOW 795	SILICONE	DOW CORNING
6		#14 X 1/2" SMS	STAINLESS STEEL	
7		MULLION REINFORCEMENT	6063-T6	CGS

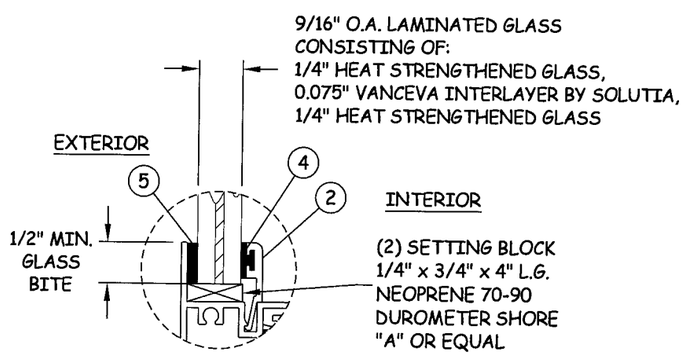

GLAZING DETAIL A

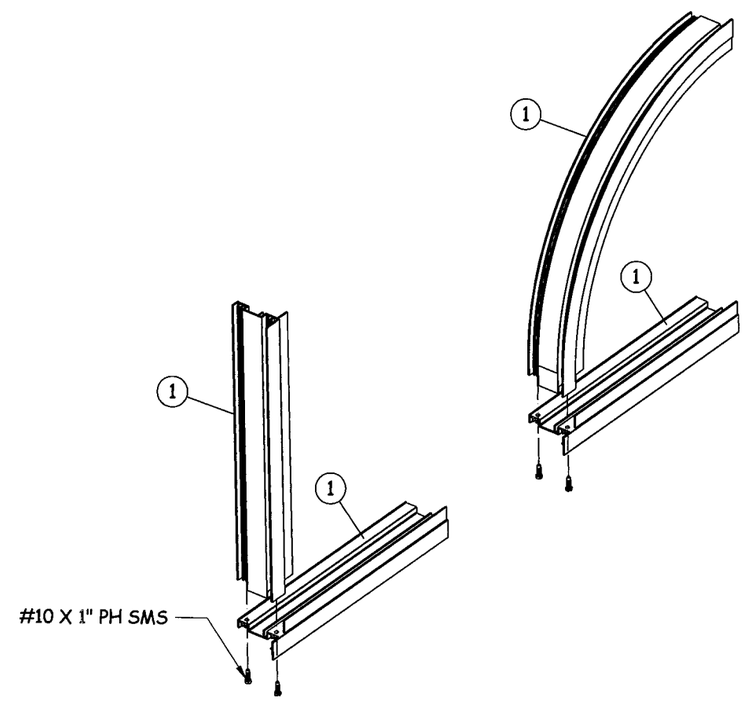

CORNER DETAILS

Approved as complying with the Florida Building Code
Date 04/07/2010
NOA# 09-1202.08
Miami Dade Product Control Division
By

CONTINENTAL Glass Systems
325 W. 74TH PLACE
HIALEAH, FL 33014
PH: (305) 231-1101 FX: (305) 231-1103

TITLE: SERIES 5500 SH COMPONENTS, GLZ DTS & BILL OF MATERIALS

PREPARED BY:
CERTWORKS, LLC
127 W. FAIRBANKS AVE., STE. 438
WINTER PARK, FL 32789
PH: (407) 644-6957 FX: (407) 644-2366

REVISIONS

NO.	DESCRIPTION	BY	DATE
A	GENERAL COMMENTS	KMH	03.09.10

3-9-10

KRISTINA S. DAUGHERTY
FLORIDA P. E. NO. 68455
127 W. FAIRBANKS AVE. STE. 438
WINTER PARK, FL 32789
FBPE CERT. OF AUTHORIZATION NO. 28520

DATE: 09.16.09	DWN BY: GRN	CHK BY: KSD	SCALE: NTS

DWG #: CGS006

SHEET: 6 OF 6

3/9/2010 3:18 PM
p:\projects\continental glass systems\md-p-09-0526.2 - 5500 series pw & pw arch\dwgs\cgs006 - 5500 series pw.dwg