MIAMI-DADE COUNTY
BUILDING CODE COMPLIANCE OFFICE (BCCO)
PRODUCT CONTROL DIVISION

MIAMI–DADE COUNTY, FLORIDA
METRO–DADE FLAGLER BUILDING
140 WEST FLAGLER STREET, SUITE 1107
MIAMI, FLORIDA 33130–1563
(305) 375–2901 FAX (305) 372–6339
www.miamidade.gov/buildingcode

NOTICE OF ACCEPTANCE (NOA)

CGI Windows & Doors
10100 N.W. 25th Street
Miami, FL. 33172

SCOPE:

This NOA is being issued under the applicable rules and regulations governing the use of construction materials. The documentation submitted has been reviewed by Miami–Dade County Product Control Division and accepted by the Board of Rules and Appeals (BORA) to be used in Miami–Dade County and other areas where allowed by the Authority Having Jurisdiction (AHJ).

This NOA shall not be valid after the expiration date stated below. The Miami–Dade County Product Control Division (In Miami–Dade County) and/or the AHJ (in areas other than Miami–Dade County) reserve the right to have this product or material tested for quality assurance purposes. If this product or material fails to perform in the accepted manner, the manufacturer will incur the expense of such testing and the AHJ may immediately revoke, modify, or suspend the use of such product or material within their jurisdiction. BORA reserves the right to revoke this acceptance, if it is determined by Miami–Dade County Product Control Division that this product or material fails to meet the requirements of the applicable building code.

This product is approved as described herein, and has been designed to comply with the Florida Building Code, including the High Velocity Hurricane Zone.

DESCRIPTION: Series "560" Aluminum Sliding Glass Door w/ wo Reinforcements – L.M.I.

APPROVAL DOCUMENT: Drawing No. **W08–14**, titled "Series 560 Alum Sliding Glass Door – LMI", sheets 1 through 13 of 13, prepared by Al–Farooq Corp., dated 05/23/08, revision "**C**" dated 11/06/09, signed and sealed by Arshad Viqar, P. E., bearing the Miami–Dade County Product Control Revision stamp with the Notice of Acceptance number and expiration date by the Miami–Dade County Product Control Division.

MISSILE IMPACT RATING: Large and Small Missile Impact Resistant

LABELING: Each unit shall bear a permanent label with the manufacturer's name or logo, city, state and the following statement: "Miami–Dade County Product Control Approved", unless otherwise noted herein.

RENEWAL of this NOA shall be considered after a renewal application has been filed and there has been no change in the applicable building code negatively affecting the performance of this product.

TERMINATION of this NOA will occur after the expiration date or if there has been a revision or change in the materials, use, and/or manufacture of the product or process. Misuse of this NOA as an endorsement of any product, for sales, advertising or any other purposes shall automatically terminate this NOA. Failure to comply with any section of this NOA shall be cause for termination and removal of NOA.

ADVERTISEMENT: The NOA number preceded by the words Miami–Dade County, Florida, and followed by the expiration date may be displayed in advertising literature. If any portion of the NOA is displayed, then it shall be done in its entirety.

INSPECTION: A copy of this entire NOA shall be provided to the user by the manufacturer or its distributors and shall be available for inspection at the job site at the request of the Building Official.

This NOA **revises NOA No. 08–0304.05** and consists of this page 1 and evidence submitted pages E–1 and E–2 as well as approval document mentioned above.

The submitted documentation was reviewed by **Jaime D. Gascon, P. E.**

MIAMI-DADE COUNTY APPROVED

J. Gascon
3/8/10

NOTICE OF ACCEPTANCE: EVIDENCE SUBMITTED

A. DRAWINGS

1. *Manufacturer's die drawings and sections.*
2. *Drawing No.* ***W08–14****, titled "Series 560 Alum Sliding Glass Door – LMI", sheets 1 through 13 of 13, prepared by Al–Farooq Corp., dated 05/23/08, revision "****C****" dated 11/06/09, signed and sealed by Arshad Viqar, P. E.*

B. TESTS

1. *Test reports on: 1) Air Infiltration Test, per FBC, TAS 202–94*
   2) Uniform Static Air Pressure Test, Loading per FBC, TAS 202–94
   3) Water Resistance Test, per FBC, TAS 202–94.
   4) Forced Entry Test, per FBC, TAS 202–94
   5) Small Missile Impact Test per FBC, TAS 201–94
   6) Large Missile Impact Test per FBC, TAS 201–94
   7) Cyclic Wind Pressure Loading per FBC, TAS 203–94
   Along with manufacturer's parts and section drawing marked–up drawings of aluminum SGD, by Hurricane Test Laboratory, Inc., Test Report No. ***HTL–0080–0707–09****, dated November 10, 2009, signed and sealed by Vinu J. Abraham, P. E.*
2. *Test reports on: 1) Air Infiltration Test, per FBC, TAS 202–94*
   2) Uniform Static Air Pressure Test, Loading per FBC, TAS 202–94
   3) Water Resistance Test, per FBC, TAS 202–94.
   4) Forced Entry Test, per FBC, TAS 202–94
   5) Small Missile Impact Test per FBC, TAS 201–94
   6) Cyclic Wind Pressure Loading per FBC, TAS 203–94
   Along with manufacturer's parts and section drawing marked–up drawings of aluminum SGD, by Hurricane Engineering Testing, Inc., Test Report No.'s ***HETI–08–2070, HETI–07–4427, HETI–07–4405, HETI–07–4418*** *and* ***HETI–07–4428****, dated February 29, 2008, signed and sealed by Candido F. Font, P. E.*
   (Submitted under previous NOA No.08–0304.05)

C. CALCULATIONS

1. *Structural–, comparative analysis and anchor verification, dated 11/23/09, prepared by Al–Farooq Corp, signed and sealed by Arshad Viqar, P.E.*
   Complies with ASTM E1300–02/ 04

D. QUALITY ASSURANCE

1. *Miami–Dade County Building Code Compliance Office (BCCO).*

Jaime D. Gascon, P. E.
Chief, Product Control Division
NOA No. 09–1209.06
Expiration Date: June 12, 2012
Approval Date: March 31, 2010

NOTICE OF ACCEPTANCE: EVIDENCE SUBMITTED

E. MATERIAL CERTIFICATIONS

1. *Notice of Acceptance No.* ***08–0520.08*** *issued to Solutia Inc. for their "****Vanceva Composites Glass Interlayer****" dated 7/17/08, expiring on 12/11/13.*
2. *Notice of Acceptance No.* ***09–0312.03*** *issued to E.I. DuPont DeNemours & Co., Inc. for their "****DuPont Sentry Glass® Interlayer****" dated 05/13/09, expiring on 01/14/12.*

F. STATEMENTS

1. *Statement letter of conformance, dated December 02, 2009, signed by Arshad Viqar, P. E.*
2. *Statement letter of no financial interest, dated December 02, 2009, signed by Arshad Viqar, P. E.*
3. *Laboratory compliance letters for Test Report No.* ***HTL–0080–0707–09****, issued by Hurricane Test Laboratory, Inc., dated November 10, 2009, signed and sealed by Vinu J. Abraham, P. E.*
4. *Laboratory compliance letters for Test Reports No.'s* ***HETI–08–2070, HETI–07–4427, HETI–07–4405, HETI–07–4418*** *and* ***HETI–07–4428****, issued by Hurricane Engineering Testing, Inc., dated February 29, 2008, signed and sealed by Candido F. Font, P. E.*
   (Submitted under previous NOA No.08–0304.05)
5. *Test proposal No.* ***08–1653*** *issued by BCCO, dated January 28, 2009, respectively, approved and signed by Ishaq Chanda, P. E.*
6. *Test proposal No.* ***07–3001–R****, dated October 23, 2007, respectively, issued and approved by BCCO.*
   (Submitted under previous NOA No.08–0304.05)
7. *Test proposal No.* ***07–3001–R–1****, revised and dated January 10, 2008, respectively, issued and approved by BCCO.*
   (Submitted under previous NOA No.08–0304.05)

G. OTHERS

1. *Notice of Acceptance No.* ***08–0304.05****, issued to CGI Windows & Doors for their Series "560 Alum Sliding Glass Door – L.M.I.", approved on 06/12/08 and expiring on 06/12/12.*
2. *Statement letter of in compliance, dated March 04, 2010, respectively, issued and signed by the consultant's Florida professional engineer.*

Jaime D. Gascon, P. E.
Chief, Product Control Division
NOA No. 09–1209.06
Expiration Date: June 12, 2012
Approval Date: March 31, 2010

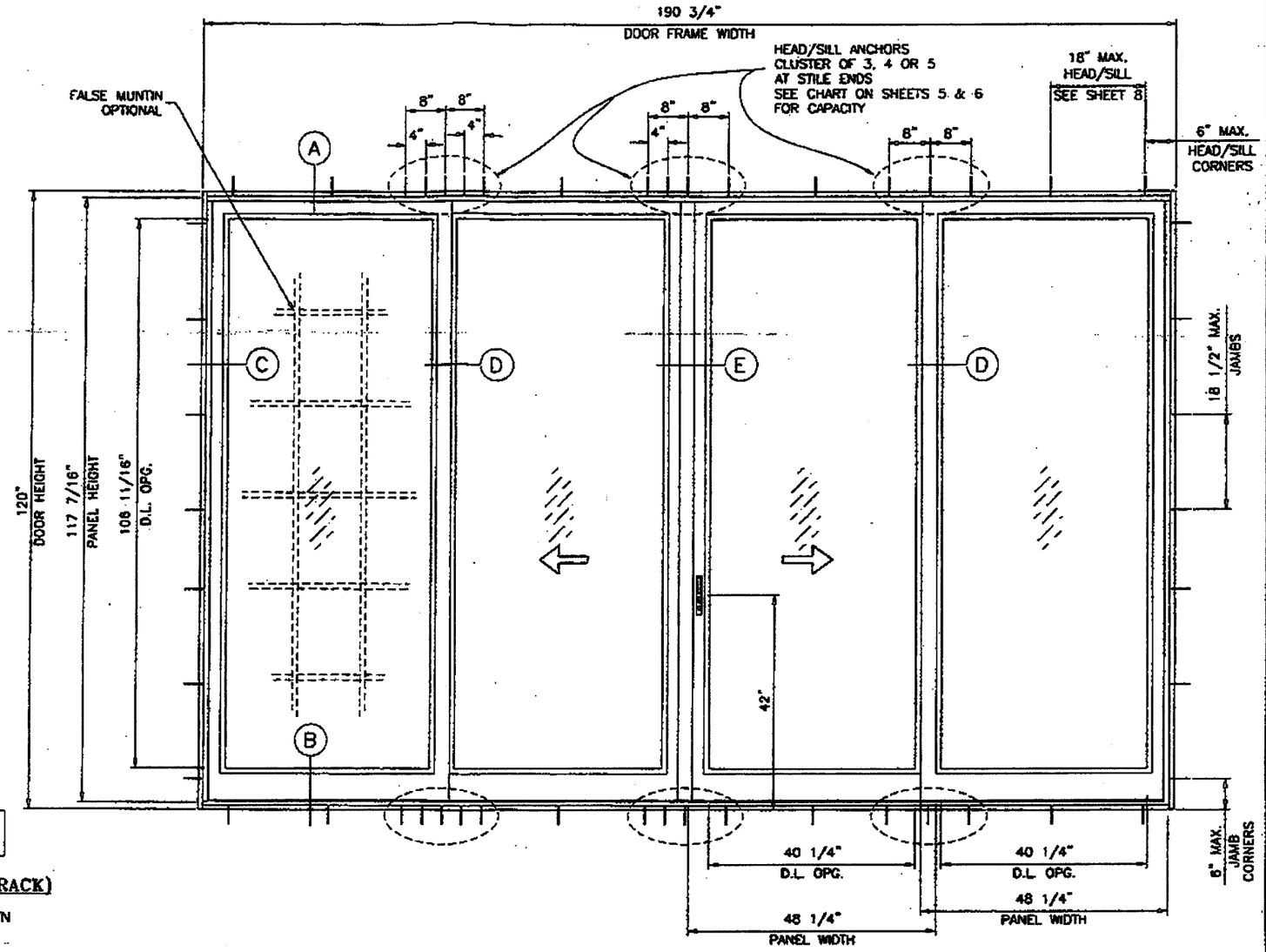

TYPICAL ELEVATION
SAMPLE TESTED UNIT

D.L. OPENING
D.L.O HEIGHT = DOOR HEIGHT – 13 5/16"
D.L.O. WIDTH = PANEL WIDTH – 8"

THESE DOORS ARE RATED FOR LARGE & SMALL MISSILE IMPACT. SHUTTERS ARE NOT REQUIRED.

SERIES 560 ALUMINUM SLIDING GLASS DOOR (2 TRACK)

DESIGN LOAD RATING FOR DOORS TO BE AS PER CHARTS SHOWN ON SHEET 3.
APPLICABLE EGRESS REQUIREMENTS PER FBC TO BE REVIEWED BY BUILDING OFFICIAL.

THIS PRODUCT HAS BEEN DESIGNED AND TESTED TO COMPLY WITH THE REQUIREMENTS OF THE FLORIDA BUILDING CODE 2007 EDITION INCLUDING HIGH VELOCITY HURRICANE ZONE (HVHZ).

WOOD BUCKS BY OTHERS, MUST BE ANCHORED PROPERLY TO TRANSFER LOADS TO THE STRUCTURE.

ANCHORS SHALL BE AS LISTED, SPACED AS SHOWN ON DETAILS, ANCHORS EMBEDMENT TO BASE MATERIAL SHALL BE BEYOND WALL DRESSING OR STUCCO.

ANCHORING OR LOADING CONDITIONS NOT SHOWN IN THESE DETAILS ARE NOT PART OF THIS APPROVAL.

A LOAD DURATION INCREASE IS USED IN DESIGN OF ANCHORS INTO WOOD ONLY.

MATERIALS INCLUDING BUT NOT LIMITED TO STEEL/METAL SCREWS, THAT COME INTO CONTACT WITH OTHER DISSIMILAR MATERIALS SHALL MEET THE REQUIREMENTS OF 2007 FLORIDA BLDG. CODE SECTION 2003.8.4.

INSTRUCTIONS:

USE CHARTS AS FOLLOWS.

STEP 1 DETERMINE DESIGN WIND LOAD REQUIREMENT BASED ON WIND VELOCITY, BLDG. HEIGHT, WIND ZONE USING APPLICABLE ASCE 7 STANDARD.

STEP 2 DETERMINE DOOR CAPACITY FROM TABLES ON SHEET 3 FOR THE GLASS TYPE AND REINFORCING TO USE.

STEP 3 USING CHARTS ON SHEET 5 & 6 SELECT ANCHOR OPTION WITH DESIGN RATING MORE THAN DESIGN LOAD SPECIFIED IN STEP 1 ABOVE.

STEP 4 (IF REQUIRED) FOR SIDE BY SIDE DOORS WITH VERTICAL MULLION SELECT 2X6 OR 2X8 TUBE FROM CHART ON SHEET 13 WITH LOAD RATING HIGHER THAN REQUIRED. SELECT ANCHORS AS PER STEP 3.

STEP 5 THE LOWEST VALUE RESULTING FROM STEPS 2, 3 AND 4 SHALL APPLY TO ENTIRE SYSTEM.

LAMINATED GLASS AND LAMINATED INSULATING GLASS LARGE/SMALL MISSILE IMPACT

Engr: ARSHAD VIQAR
CIVIL
FLA. PE # 38863
C.O.N. 3538
DEC 03 2009

PRODUCT REVISED
as complying with the Florida Building Code
Acceptance No 09-1209.06
Expiration Date 05/12/2012
By
Miami Dade Product Control Division

AL-FAROOQ CORPORATION
ENGINEERS & PRODUCT DEVELOPMENT
1236 S.W. 87 AVE
MIAMI, FLORIDA 33174
TEL. (305) 264-6100 FAX. (305) 262-6978
COMP-ANL\WOB-14CGI

CGI WINDOWS & DOORS
10100 N.W. 25TH STREET
MIAMI, FL. 33172
TEL. (305) 593-6590 FAX. (305) 593-6592

SERIES-560 ALUM SLIDING GLASS DOOR (L.M.I.)

revisions:

no	date	by	description
A	04.16.08		REV. PER BCCO COMMENTS
B	05.16.08		REV. PER BCCO COMMENTS
C	11.05.09		POCKET DOOR OPTION ADDED

date: 02-08-08
scale: 1/2"=1'-0"
dr. by: HAMID
chk. by:

drawing no.
W08-14

sheet 1 of 13

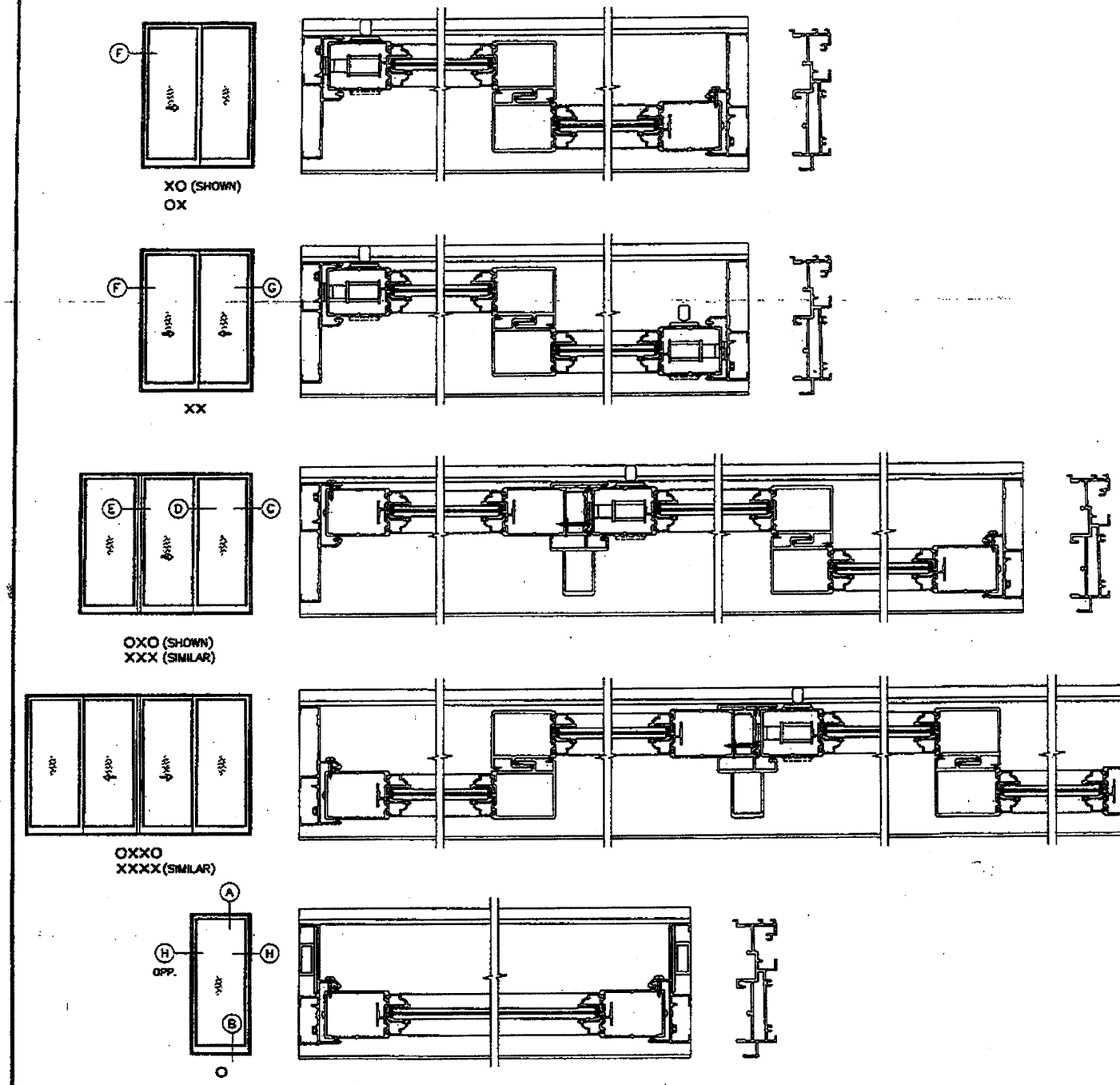

APPROVED CONFIGURATIONS
NON-POCKETED DOORS

Over-all Door Frame Width based on Panel Width

Panel Width	2 Panel Door Frame Width	3 Panel Door Frame Width	4 Panel Door Frame Width	1 Fixed Panel Frame Width
24 1/4"	48"	73 1/2"	94 3/4"	26 3/4"
30 1/4"	60"	91 1/2"	118 3/4"	32 3/4"
36 1/4"	72"	109 1/2"	142 3/4"	38 3/4"
42 1/4"	84"	127 1/2"	166 3/4"	44 3/4"
48 1/4"	96"	145 1/2"	190 3/4"	50 3/4"
54 1/4"	108"	163 1/2"	214 3/4"	56 3/4"
60 1/4"	120"	181 1/2"	238 3/4"	62 3/4"

MAXIMUM DOOR HEIGHT = 120"

Formula to convert Door Width to Panel Width

For 2 Panel Doors: Door Width/2 + 1/4" = Panel Width
For 3 Panel Doors: Door Width/3 − 1/4" = Panel Width
For 4 Panel Doors: Door Width/4 + 9/16" = Panel Width
For 1 Panel Doors: Door Width − 2 1/2" = Panel Width

Formula to convert Panel Width to Door Width

For 2 Panel Doors: Panel Width x 2 − 1/2" = Door Width
For 3 Panel Doors: Panel Width x 3 + 3/4" = Door Width
For 4 Panel Doors: Panel Width x 4 − 2 1/4" = Door Width
For 1 Panel Doors: Panel Width + 2 1/2" = Door Width

Panel Height Formula

Door Height − 2 9/16" = Panel Height

D.L. OPENING
D.L.O HEIGHT = DOOR HEIGHT − 13 5/16"
D.L.O. WIDTH = PANEL WIDTH − 8"

Engr: ARSHAD VIQAR
CIVIL
FLA. PE # 38863
C.A.N. 9538

DEC 03 2009

PRODUCT REVISED
as complying with the Florida
Building Code
Acceptance No 09-1209.06
Expiration Date 06/12/2012
By
Miami Dade Product Control
Division

AL-FAROOQ CORPORATION
ENGINEERS & PRODUCT DEVELOPMENT
1235 S.W. 87 AVE
MIAMI, FLORIDA 33174
TEL. (305) 264-8400 FAX. (305) 262-9979
COMP-ANL\W08-14CGI

SERIES-560 ALUM SLIDING GLASS DOOR (L.M.I.)

CGI WINDOWS & DOORS
10100 N.W. 25TH STREET
MIAMI, FL. 33172
TEL. (305) 593-6590 FAX. (305) 593-6592

revisions:

no	date	by	description
A	04.18.08		REV. PER BCCO COMMENTS
B	05.16.08		REV. PER BCCO COMMENTS
C	11.08.09		NO CHANGE THIS SHEET

date: 02-08-08
scale: -
dr. by: HAMID
chk. by:

drawing no.
W08-14

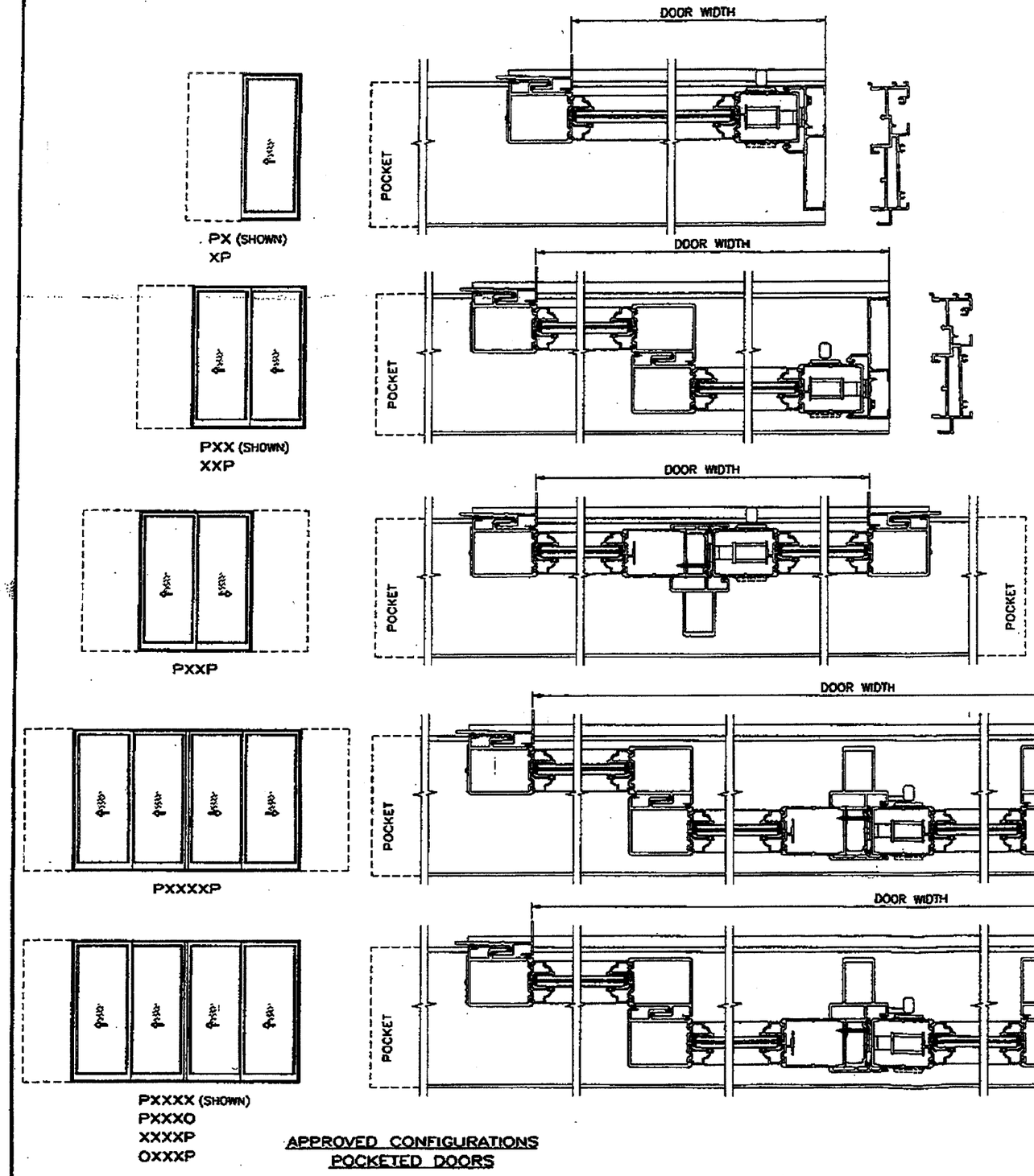

APPROVED CONFIGURATIONS
POCKETED DOORS

Over-all Door Width based on Panel Width

Panel Width	PX, XP Door Width	PXX, XXP Door Width	PXXP Door Width	PXXXXP Door Width	PXXXX Door Width
24 1/4"	22 9/16"	43 13/16"	44 1/16"	86 5/8"	90 3/4"
30 1/4"	28 9/16"	55 13/16"	56 1/16"	110 5/8"	114 3/4"
36 1/4"	34 9/16"	67 13/16"	68 1/16"	134 5/8"	138 3/4"
42 1/4"	40 9/16"	79 13/16"	80 1/16"	158 5/8"	162 3/4"
48 1/4"	46 9/16"	91 13/16"	92 1/16"	182 5/8"	186 3/4"
54 1/4"	52 9/16"	103 13/16"	104 1/16"	206 5/8"	210 3/4"
60 1/4"	58 9/16"	115 13/16"	116 1/16"	230 5/8"	234 3/4"

MAXIMUM DOOR HEIGHT = 120"

Formula to convert Door Width to Panel Width

For PX: Door Width + 1 11/16" = Panel Width
For PXX: (Door Width + 4 11/16")/2 = Panel Width
For PXXP: (Door Width + 4 7/16")/2 = Panel Width
For PXXXXP: (Door Width + 10 3/8")/4 = Panel Width
For PXXXX: (Door Width + 6 1/4")/4 = Panel Width

Formula to convert Panel Width to Door Width

For PX: Panel Width − 1 11/16" = Door Width
For PXX: Panel Width x 2 − 4 11/16" = Door Width
For PXXP: Panel Width x 2 − 4 7/16" = Door Width
For PXXXXP: Panel Width x 4 − 10 3/8" = Door Width
For PXXXX: Panel Width x 4 − 6 1/4" = Door Width

Panel Height Formula

Door Height − 2 9/16" = Panel Height

D.L. OPENING
D.L.O HEIGHT = DOOR HEIGHT − 13 5/16"
D.L.O. WIDTH = PANEL WIDTH − 8"

PRODUCT REVISED
as complying with the Florida
Building Code
Acceptance No 09-1209.06
Expiration Date 06/12/2012
By
Miami-Dade Product Control
Division

Engr: ARSHAD MIQAR
CIVIL
FLA. PE # 38863
C.A.N. 3538

DEC 03 2009

AL-FAROOQ CORPORATION
ENGINEERS & PRODUCT DEVELOPMENT
1295 S.W. 87 AVE
MIAMI, FLORIDA 33174
TEL (305) 264-6100 | FAX. (305) 262-6978
COMP-ANL\W08-F4CQ1

SERIES-560 ALUM SLIDING GLASS DOOR (L.M.I.)

CGI WINDOWS & DOORS
10100 N.W. 25TH STREET
MIAMI, FL. 33172
TEL. (305) 593-8590 FAX. (305) 593-8592

revisions:

no	date	by	description
c	11.06.09		POCKET DOOR OPTION ADDED

date: 02-08-08
scale: -
dr. by: HAMID
chk. by:

drawing no. W08-14

sheet 2.1 of 13

GLASS CAPACITY CHARTS

DESIGN LOAD CAPACITY – PSF (GLASS)

PANEL WIDTH INCHES	DOOR HEIGHT INCHES	GLASS TYPES '1' & '1A' W/O REINF. EXT.(+)	GLASS TYPES '1' & '1A' W/O REINF. INT.(–)	GLASS TYPES '2' & '2A' W/O REINF. EXT.(+)	GLASS TYPES '2' & '2A' W/O REINF. INT.(–)	GLASS TYPES '2' & '2A' WITH REINF. EXT.(+)	GLASS TYPES '2' & '2A' WITH REINF. INT.(–)
24-1/4	80	120.0	170.0	120.0	170.0	120.0	170.0
30-1/4		120.0	165.0	120.0	165.0	120.0	170.0
33-1/4		120.0	153.7	120.0	153.7	120.0	170.0
36-1/4		120.0	144.4	120.0	144.4	120.0	170.0
39-1/4		120.0	134.3	120.0	136.6	120.0	170.0
42-1/4		120.0	120.3	120.0	130.2	120.0	170.0
44-1/4		114.1	114.1	120.0	126.4	120.0	170.0
46-1/4		108.8	108.8	120.0	123.1	120.0	170.0
48-1/4		104.5	104.5	120.0	120.1	120.0	170.0
50-1/4		100.8	100.8	117.4	117.4	120.0	170.0
52-1/4		95.6	95.6	115.0	115.0	120.0	170.0
54-1/4		93.8	93.8	112.9	112.9	120.0	170.0
56-1/4		92.0	92.0	111.0	111.0	120.0	170.0
58-1/4		80.0	80.0	80.0	80.0	120.0	140.0
60-1/4		80.0	80.0	80.0	80.0	120.0	140.0
24-1/4	84	120.0	170.0	120.0	170.0	120.0	170.0
30-1/4		120.0	155.4	120.0	155.4	120.0	170.0
33-1/4		120.0	144.5	120.0	144.5	120.0	170.0
36-1/4		120.0	135.6	120.0	135.6	120.0	170.0
39-1/4		120.0	128.2	120.0	128.2	120.0	170.0
42-1/4		115.3	115.3	120.0	121.9	120.0	170.0
44-1/4		108.5	108.5	120.0	118.3	120.0	170.0
46-1/4		103.3	103.3	120.0	115.0	120.0	170.0
48-1/4		99.0	99.0	112.1	112.1	120.0	170.0
50-1/4		92.5	92.5	109.5	109.5	120.0	170.0
52-1/4		90.7	90.7	107.1	107.1	120.0	170.0
54-1/4		88.9	88.9	104.9	104.9	120.0	170.0
56-1/4		80.0	80.0	80.0	80.0	120.0	140.0
58-1/4		80.0	80.0	80.0	80.0	120.0	140.0
60-1/4		80.0	80.0	80.0	80.0	120.0	140.0
24-1/4	90	120.0	170.0	120.0	170.0	120.0	170.0
30-1/4		120.0	143.0	120.0	143.0	120.0	170.0
33-1/4		120.0	132.7	120.0	132.7	120.0	170.0
36-1/4		120.0	124.3	120.0	124.3	120.0	170.0
39-1/4		117.2	117.2	117.2	117.2	120.0	170.0
42-1/4		109.0	109.0	111.3	111.3	120.0	170.0
44-1/4		101.7	101.7	107.8	107.8	120.0	170.0
46-1/4		90.2	90.2	104.7	104.7	120.0	170.0
48-1/4		88.1	88.1	101.9	101.9	120.0	170.0
50-1/4		86.2	86.2	99.3	99.3	120.0	170.0
52-1/4		80.0	80.0	80.0	80.0	120.0	140.0
54-1/4		80.0	80.0	80.0	80.0	120.0	140.0
56-1/4		80.0	80.0	80.0	80.0	120.0	140.0
58-1/4		80.0	80.0	80.0	80.0	120.0	140.0
60-1/4		80.0	80.0	80.0	80.0	120.0	140.0
24-1/4	96	120.0	159.2	120.0	159.2	120.0	170.0
30-1/4		120.0	132.4	120.0	132.4	120.0	170.0
33-1/4		120.0	122.7	120.0	122.7	120.0	170.0
36-1/4		114.7	114.7	114.7	114.7	120.0	170.0
39-1/4		108.0	108.0	108.0	108.0	120.0	170.0
42-1/4		102.4	102.4	102.4	102.4	120.0	170.0
44-1/4		91.1	91.1	99.1	99.1	120.0	170.0
46-1/4		86.9	86.9	96.1	96.1	120.0	170.0
48-1/4		83.5	83.5	93.4	93.4	120.0	167.0
50-1/4		80.0	80.0	80.0	80.0	120.0	140.0
52-1/4		80.0	80.0	80.0	80.0	120.0	140.0
54-1/4		80.0	80.0	80.0	80.0	120.0	140.0
56-1/4		78.3	78.3	80.0	80.0	120.0	140.0
58-1/4		76.1	76.1	80.0	80.0	120.0	140.0
60-1/4		74.1	74.1	80.0	80.0	120.0	140.0

DESIGN LOAD CAPACITY – PSF (GLASS)

PANEL WIDTH INCHES	DOOR HEIGHT INCHES	GLASS TYPES '1' & '1A' W/O REINF. EXT.(+)	GLASS TYPES '1' & '1A' W/O REINF. INT.(–)	GLASS TYPES '2' & '2A' W/O REINF. EXT.(+)	GLASS TYPES '2' & '2A' W/O REINF. INT.(–)	GLASS TYPES '2' & '2A' WITH REINF. EXT.(+)	GLASS TYPES '2' & '2A' WITH REINF. INT.(–)
24-1/4	99	80.0	80.0	80.0	80.0	120.0	140.0
30-1/4		80.0	80.0	80.0	80.0	120.0	140.0
33-1/4		80.0	80.0	80.0	80.0	120.0	140.0
36-1/4		80.0	80.0	80.0	80.0	120.0	140.0
39-1/4		80.0	80.0	80.0	80.0	120.0	140.0
42-1/4		80.0	80.0	80.0	80.0	120.0	140.0
44-1/4		80.0	80.0	80.0	80.0	120.0	140.0
46-1/4		80.0	80.0	80.0	80.0	120.0	140.0
48-1/4		80.0	80.0	80.0	80.0	120.0	140.0
50-1/4		80.0	80.0	80.0	80.0	120.0	140.0
52-1/4		80.0	80.0	80.0	80.0	120.0	140.0
54-1/4		78.1	78.1	80.0	80.0	120.0	140.0
56-1/4		75.5	75.5	80.0	80.0	120.0	140.0
58-1/4		73.3	73.3	79.6	79.6	120.0	140.0
60-1/4		–	–	–	–	90.0	90.0
24-1/4	102	80.0	80.0	80.0	80.0	120.0	140.0
30-1/4		80.0	80.0	80.0	80.0	120.0	140.0
33-1/4		80.0	80.0	80.0	80.0	120.0	140.0
36-1/4		80.0	80.0	80.0	80.0	120.0	140.0
39-1/4		80.0	80.0	80.0	80.0	120.0	140.0
42-1/4		80.0	80.0	80.0	80.0	120.0	140.0
44-1/4		80.0	80.0	80.0	80.0	120.0	140.0
46-1/4		80.0	80.0	80.0	80.0	120.0	140.0
48-1/4		80.0	80.0	80.0	80.0	120.0	140.0
50-1/4		80.0	80.0	80.0	80.0	120.0	140.0
52-1/4		78.4	78.4	80.0	80.0	120.0	140.0
54-1/4		75.4	75.4	79.7	79.7	120.0	140.0
56-1/4		72.9	72.9	77.9	77.9	120.0	140.0
58-1/4		–	–	–	–	90.0	90.0
60-1/4		–	–	–	–	90.0	90.0
24-1/4	105	80.0	80.0	80.0	80.0	120.0	140.0
30-1/4		80.0	80.0	80.0	80.0	120.0	140.0
33-1/4		80.0	80.0	80.0	80.0	120.0	140.0
36-1/4		80.0	80.0	80.0	80.0	120.0	140.0
39-1/4		80.0	80.0	80.0	80.0	120.0	140.0
42-1/4		80.0	80.0	80.0	80.0	120.0	140.0
44-1/4		80.0	80.0	80.0	80.0	120.0	140.0
46-1/4		80.0	80.0	80.0	80.0	120.0	140.0
48-1/4		80.0	80.0	80.0	80.0	120.0	140.0
50-1/4		79.3	79.3	80.0	80.0	120.0	140.0
52-1/4		75.9	75.9	78.6	78.6	120.0	140.0
54-1/4		73.0	73.0	76.6	76.6	120.0	140.0
56-1/4		–	–	–	–	90.0	90.0
58-1/4		–	–	–	–	90.0	90.0
60-1/4		–	–	–	–	90.0	90.0
24-1/4	108	80.0	80.0	80.0	80.0	120.0	140.0
30-1/4		80.0	80.0	80.0	80.0	120.0	140.0
33-1/4		80.0	80.0	80.0	80.0	120.0	140.0
36-1/4		80.0	80.0	80.0	80.0	120.0	140.0
39-1/4		80.0	80.0	80.0	80.0	120.0	140.0
42-1/4		80.0	80.0	80.0	80.0	120.0	140.0
44-1/4		80.0	80.0	80.0	80.0	120.0	140.0
46-1/4		80.0	80.0	80.0	80.0	120.0	140.0
48-1/4		80.0	80.0	80.0	80.0	120.0	140.0
50-1/4		77.0	77.0	77.8	77.8	120.0	140.0
52-1/4		73.6	73.6	75.7	75.7	120.0	140.0
54-1/4		–	–	–	–	90.0	90.0
56-1/4		–	–	–	–	90.0	90.0
58-1/4		–	–	–	–	90.0	90.0
60-1/4		–	–	–	–	90.0	90.0

DESIGN LOAD CAPACITY – PSF (GLASS)

PANEL WIDTH INCHES	DOOR HEIGHT INCHES	GLASS TYPES '1' & '1A' W/O REINF. EXT.(+)	GLASS TYPES '1' & '1A' W/O REINF. INT.(–)	GLASS TYPES '2' & '2A' W/O REINF. EXT.(+)	GLASS TYPES '2' & '2A' W/O REINF. INT.(–)	GLASS TYPES '2' & '2A' WITH REINF. EXT.(+)	GLASS TYPES '2' & '2A' WITH REINF. INT.(–)
24-1/4	111	80.0	80.0	80.0	80.0	120.0	140.0
30-1/4		80.0	80.0	80.0	80.0	120.0	140.0
33-1/4		80.0	80.0	80.0	80.0	120.0	140.0
36-1/4		80.0	80.0	80.0	80.0	120.0	140.0
39-1/4		80.0	80.0	80.0	80.0	120.0	140.0
42-1/4		80.0	80.0	80.0	80.0	120.0	140.0
44-1/4		80.0	80.0	80.0	80.0	120.0	140.0
46-1/4		79.7	79.7	79.7	79.7	120.0	140.0
48-1/4		77.3	77.3	77.3	77.3	120.0	140.0
50-1/4		74.8	74.8	75.0	75.0	120.0	140.0
52-1/4		–	–	–	–	90.0	90.0
54-1/4		–	–	–	–	90.0	90.0
56-1/4		–	–	–	–	90.0	90.0
58-1/4		–	–	–	–	90.0	90.0
60-1/4		–	–	–	–	90.0	90.0
24-1/4	114	80.0	80.0	80.0	80.0	120.0	140.0
30-1/4		80.0	80.0	80.0	80.0	120.0	140.0
33-1/4		80.0	80.0	80.0	80.0	120.0	140.0
36-1/4		80.0	80.0	80.0	80.0	120.0	140.0
39-1/4		80.0	80.0	80.0	80.0	120.0	140.0
42-1/4		80.0	80.0	80.0	80.0	120.0	140.0
44-1/4		79.7	79.7	80.0	80.0	120.0	140.0
46-1/4		77.0	77.0	77.0	77.0	120.0	140.0
48-1/4		74.7	74.7	74.7	74.7	120.0	140.0
50-1/4		72.5	72.5	72.5	72.5	120.0	140.0
52-1/4		–	–	–	–	90.0	90.0
54-1/4		–	–	–	–	90.0	90.0
56-1/4		–	–	–	–	90.0	90.0
58-1/4		–	–	–	–	90.0	90.0
60-1/4		–	–	–	–	90.0	90.0
24-1/4	117	80.0	80.0	80.0	80.0	120.0	140.0
30-1/4		80.0	80.0	80.0	80.0	120.0	140.0
33-1/4		80.0	80.0	80.0	80.0	120.0	140.0
36-1/4		80.0	80.0	80.0	80.0	120.0	140.0
39-1/4		80.0	80.0	80.0	80.0	120.0	140.0
42-1/4		79.9	79.9	80.0	80.0	120.0	140.0
44-1/4		77.1	77.1	79.9	79.9	120.0	140.0
46-1/4		74.6	74.6	74.6	74.6	120.0	140.0
48-1/4		72.3	72.3	72.3	72.3	120.0	140.0
50-1/4		–	–	–	–	90.0	90.0
52-1/4		–	–	–	–	90.0	90.0
54-1/4		–	–	–	–	90.0	90.0
56-1/4		–	–	–	–	90.0	90.0
58-1/4		–	–	–	–	90.0	90.0
60-1/4		–	–	–	–	90.0	90.0
24-1/4	120	80.0	80.0	80.0	80.0	120.0	140.0
30-1/4		80.0	80.0	80.0	80.0	120.0	140.0
33-1/4		80.0	80.0	80.0	80.0	120.0	140.0
36-1/4		80.0	80.0	80.0	80.0	120.0	140.0
39-1/4		80.0	80.0	80.0	80.0	120.0	140.0
42-1/4		77.5	77.5	80.0	80.0	120.0	140.0
44-1/4		74.8	74.8	77.5	77.5	120.0	140.0
46-1/4		72.3	72.3	72.3	72.3	120.0	140.0
48-1/4		70.0	70.0	70.0	70.0	120.0	140.0
50-1/4		–	–	–	–	90.0	90.0
52-1/4		–	–	–	–	90.0	90.0
54-1/4		–	–	–	–	90.0	90.0
56-1/4		–	–	–	–	90.0	90.0
58-1/4		–	–	–	–	90.0	90.0
60-1/4		–	–	–	–	90.0	90.0

NOTE:
APPROPRIATE SILL RISER TO BE SELECTED FOR MAX. POSITIVE DESIGN PRESSURE SEE DETAILS ON SHEET 4.
OBTAIN ANCHOR TYPE AND CONFIGURATION TO USE FROM ANCHOR CHARTS ON SHEET 5
MULLION SIZE AND CAPACITY TO BE OBTAINED FROM CHARTS ON SHEET 13.
LOWEST APPLICABLE VALUE FROM THE ABOVE WILL APPLY TO CONDITION REVIEWED.

PRODUCT REVISED
as complying with the Florida Building Code
Acceptance No. 09-1209.06
Expiration Date 06/12/2012
By
Miami Dade Product Control Division

NOTE:
GLASS CAPACITIES ON THIS SHEET ARE BASED ON ASTM E1300-04 (3 SEC. GUSTS) AND FLORIDA BUILDING COMMISSION DECLARATORY STATEMENT DCA05-DEC-219

Engr: ARSHAD VIQAR
CIVIL
FLA. PE # 38863
C.A.R. 3538

DEC 03 2009

AL-FAROOQ CORPORATION
ENGINEERS & PRODUCT DEVELOPMENT
1285 S.W. 87 AVE
MIAMI, FLORIDA 33174
TEL. (305) 264-8100 FAX. (305) 262-6978
COMP-ANL\WO8-14CGI

SERIES-560 ALUM SLIDING GLASS DOOR (L.M.I.)

CGI WINDOWS & DOORS
10100 N.W. 25TH STREET
MIAMI, FL. 33172
TEL. (305) 593-6590 FAX. (305) 593-6592

revisions:

no	date	by	description
A	04.16.08		REV. PER BCCO COMMENTS
B	05.16.08		NO CHANGE THIS SHEET
C	11.06.09		NO CHANGE THIS SHEET

date: 02-08-08
scale: –
dr. by: HAMID
chk. by: –

drawing no.
WO8-14

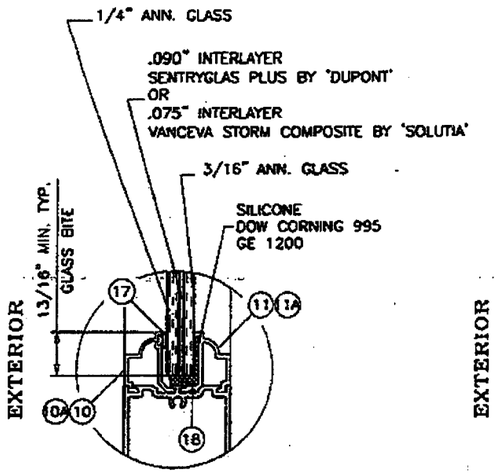

GLASS TYPE '1'

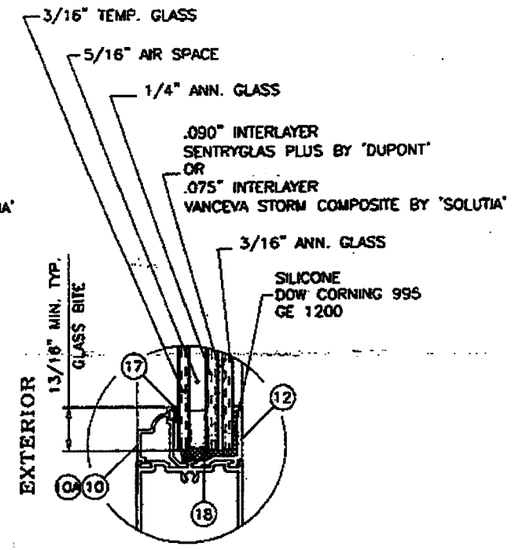

GLASS TYPE '1A'

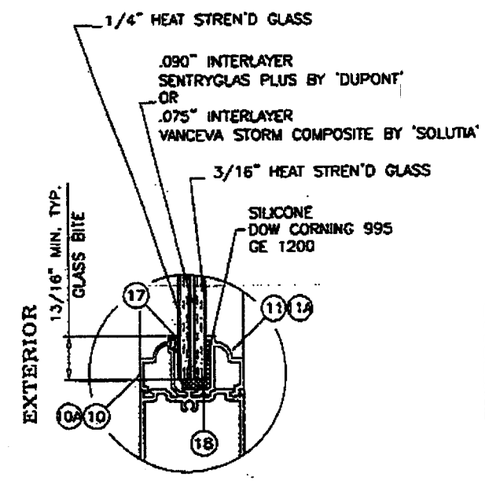

GLASS TYPE '2'

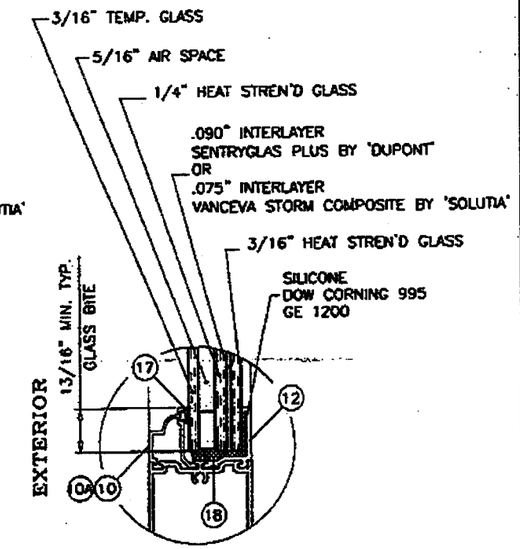

GLASS TYPE '2A'

GLAZING OPTIONS

NOTE:
3/16" AND 1/4" PIECES OF GLASS ON THE
1/2" LAMINATED UNIT ARE INTERCHANGEABLE
(EX: 3/16" + 1/4" OR 1/4" + 3/16")

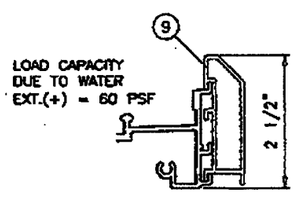

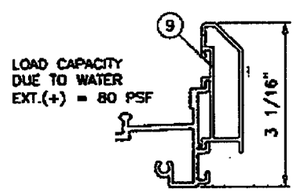

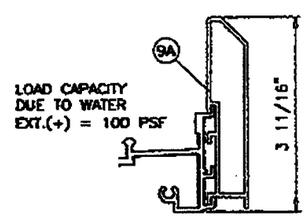

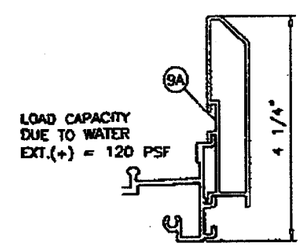

LOAD CAPACITIES SHOWN IN CHART ON SHEET 3 ARE FOR DOORS USING 4-1/4" SILL HEIGHTS
FOR DOORS USING LOWER SILL HEIGHTS LIMIT EXTERIOR(+) LOADS AS SHOWN ABOVE.

Engr: ARSHAD VIQAR
CIVIL
FLA. PE # 38863
C.A.N. 3538

DEC 03 2009

PRODUCT REVISED
as complying with the Florida
Building Code
Acceptance No 09-1209.06
Expiration Date 06/12/2012
By
Miami Dade Product Control
Division

AL-FAROOQ CORPORATION
ENGINEERS & PRODUCT DEVELOPMENT
1238 S.W. 87 AVE
MIAMI, FLORIDA 33174
TEL. (305) 264-8100 FAX. (305) 262-6978
COMP-ANL\W08-14CGI

SERIES-560 ALUM SLIDING GLASS DOOR (L.M.I.)

CGI WINDOWS & DOORS
10100 N.W. 25TH STREET
MIAMI, FL. 33172
TEL. (305) 593-6590 FAX. (305) 593-6592

revisions:

no	date	by	description
A	04.18.08		REV. PER BCCO COMMENTS
B	06.16.08		NO CHANGE THIS SHEET
C	11.05.09		NO CHANGE THIS SHEET

date: 02-06-08
scale: -
dr. by: HAMID
chk. by:

drawing no.
W08-14

DESIGN LOAD CAPACITY - PSF (ANCHORS)

PANEL WIDTH INCHES	DOOR HEIGHT INCHES	ANCHORS TYPE 'A' 1/2" SHIM SPACE CLUSTER OF 3	4	5	ANCHORS TYPE 'B' 1/4" SHIM SPACE CLUSTER OF 3	4	5	3/8" SHIM SPACE CLUSTER OF 3	4	5	1/2" SHIM SPACE CLUSTER OF 3	4	5	ANCHORS TYPE 'C' 1/2" SHIM SPACE CLUSTER OF 3	4	5
24-1/4	80	170.0	170.0	170.0	170.0	170.0	170.0	170.0	170.0	170.0	170.0	170.0	170.0	170.0	170.0	170.0
30-1/4		170.0	170.0	170.0	170.0	170.0	170.0	170.0	170.0	170.0	170.0	170.0	170.0	170.0	170.0	170.0
36-1/4		162.9	170.0	170.0	170.0	170.0	170.0	170.0	170.0	170.0	168.7	170.0	170.0	170.0	170.0	170.0
42-1/4		146.9	170.0	170.0	170.0	170.0	170.0	170.0	170.0	170.0	152.1	170.0	170.0	170.0	170.0	170.0
48-1/4		135.6	170.0	170.0	170.0	170.0	170.0	170.0	170.0	170.0	140.4	170.0	170.0	160.2	170.0	170.0
54-1/4		127.4	169.9	170.0	170.0	170.0	170.0	162.0	170.0	170.0	131.9	170.0	170.0	150.6	170.0	170.0
60-1/4		121.6	162.2	170.0	170.0	170.0	170.0	154.7	170.0	170.0	125.9	167.9	170.0	143.8	170.0	170.0
24-1/4	84	170.0	170.0	170.0	170.0	170.0	170.0	170.0	170.0	170.0	170.0	170.0	170.0	170.0	170.0	170.0
30-1/4		170.0	170.0	170.0	170.0	170.0	170.0	170.0	170.0	170.0	170.0	170.0	170.0	170.0	170.0	170.0
36-1/4		153.0	170.0	170.0	170.0	170.0	170.0	170.0	170.0	170.0	158.5	170.0	170.0	170.0	170.0	170.0
42-1/4		137.6	170.0	170.0	170.0	170.0	170.0	170.0	170.0	170.0	142.5	170.0	170.0	162.6	170.0	170.0
48-1/4		126.5	168.7	170.0	170.0	170.0	170.0	160.9	170.0	170.0	131.0	170.0	170.0	149.5	170.0	170.0
54-1/4		118.4	157.9	170.0	170.0	170.0	170.0	150.7	170.0	170.0	122.6	163.5	170.0	140.0	170.0	170.0
60-1/4		112.6	150.1	170.0	170.0	170.0	170.0	143.2	170.0	170.0	116.6	155.4	170.0	133.1	170.0	170.0
24-1/4	90	170.0	170.0	170.0	170.0	170.0	170.0	170.0	170.0	170.0	170.0	170.0	170.0	170.0	170.0	170.0
30-1/4		161.4	170.0	170.0	170.0	170.0	170.0	170.0	170.0	170.0	167.1	170.0	170.0	170.0	170.0	170.0
36-1/4		140.3	170.0	170.0	170.0	170.0	170.0	170.0	170.0	170.0	145.2	170.0	170.0	165.8	170.0	170.0
42-1/4		125.6	167.5	170.0	170.0	170.0	170.0	159.7	170.0	170.0	130.0	170.0	170.0	148.5	170.0	170.0
48-1/4		115.0	153.3	170.0	170.0	170.0	170.0	146.2	170.0	170.0	119.1	158.7	170.0	135.9	170.0	170.0
54-1/4		107.1	142.9	170.0	170.0	170.0	170.0	136.3	170.0	170.0	110.9	147.9	170.0	126.7	168.9	170.0
60-1/4		101.3	135.1	168.6	170.0	170.0	170.0	128.9	170.0	170.0	104.9	139.9	170.0	119.8	159.7	170.0
24-1/4	96	170.0	170.0	170.0	170.0	170.0	170.0	170.0	170.0	170.0	170.0	170.0	170.0	170.0	170.0	170.0
30-1/4		149.4	170.0	170.0	170.0	170.0	170.0	170.0	170.0	170.0	154.7	170.0	170.0	170.0	170.0	170.0
36-1/4		129.5	170.0	170.0	170.0	170.0	170.0	164.7	170.0	170.0	134.1	170.0	170.0	153.0	170.0	170.0
42-1/4		115.5	154.0	170.0	170.0	170.0	170.0	146.9	170.0	170.0	119.6	159.5	170.0	136.6	170.0	170.0
48-1/4		105.4	140.5	170.0	170.0	170.0	170.0	134.0	170.0	170.0	109.1	145.5	170.0	124.6	166.1	170.0
54-1/4		97.8	130.4	163.0	168.1	170.0	170.0	124.4	165.9	170.0	101.3	135.0	168.8	115.6	154.2	170.0
60-1/4		92.1	122.8	153.5	158.3	170.0	170.0	117.1	156.2	170.0	95.3	127.1	158.9	108.8	145.1	170.0
24-1/4	102	167.7	170.0	170.0	170.0	170.0	170.0	170.0	170.0	170.0	170.0	170.0	170.0	170.0	170.0	170.0
30-1/4		139.1	170.0	170.0	170.0	170.0	170.0	170.0	170.0	170.0	144.0	170.0	170.0	164.4	170.0	170.0
36-1/4		120.2	160.3	170.0	170.0	170.0	170.0	152.9	170.0	170.0	124.5	166.0	170.0	142.1	170.0	170.0
42-1/4		107.0	142.6	170.0	170.0	170.0	170.0	136.0	170.0	170.0	110.8	147.7	170.0	126.4	168.6	170.0
48-1/4		97.3	129.7	162.1	167.2	170.0	170.0	123.7	164.9	170.0	100.7	134.3	167.9	115.0	153.3	170.0
54-1/4		90.0	120.0	150.0	154.6	170.0	170.0	114.4	152.6	170.0	93.2	124.2	155.3	106.4	141.8	170.0
60-1/4		84.4	112.5	140.7	145.0	170.0	170.0	107.3	143.1	170.0	87.4	116.5	145.6	99.8	133.0	166.3
24-1/4	108	157.2	170.0	170.0	170.0	170.0	170.0	170.0	170.0	170.0	162.8	170.0	170.0	170.0	170.0	170.0
30-1/4		130.1	170.0	170.0	170.0	170.0	170.0	165.5	170.0	170.0	134.7	170.0	170.0	153.8	170.0	170.0
36-1/4		112.2	149.6	170.0	170.0	170.0	170.0	142.7	170.0	170.0	116.2	154.9	170.0	132.6	170.0	170.0
42-1/4		99.6	132.8	166.0	170.0	170.0	170.0	126.6	168.9	170.0	103.1	137.5	170.0	117.7	156.9	170.0
48-1/4		90.3	120.4	150.5	155.2	170.0	170.0	114.9	153.1	170.0	93.5	124.7	155.8	106.7	142.3	170.0
54-1/4		83.3	111.1	138.8	143.2	170.0	170.0	105.9	141.3	170.0	86.3	115.0	143.8	98.5	131.3	164.1
60-1/4		77.9	103.9	129.8	133.9	170.0	170.0	99.1	132.1	165.1	80.7	107.5	134.4	92.1	122.8	153.5
24-1/4	114	147.9	170.0	170.0	170.0	170.0	170.0	170.0	170.0	170.0	153.2	170.0	170.0	170.0	170.0	170.0
30-1/4		122.2	162.9	170.0	170.0	170.0	170.0	155.4	170.0	170.0	126.5	168.7	170.0	144.4	170.0	170.0
36-1/4		105.2	140.2	170.0	170.0	170.0	170.0	133.7	170.0	170.0	108.9	145.2	170.0	124.3	165.7	170.0
42-1/4		93.1	124.2	155.2	160.1	170.0	170.0	118.5	157.9	170.0	96.4	128.6	160.7	110.1	146.8	170.0
48-1/4		84.3	112.4	140.5	144.8	170.0	170.0	107.2	142.9	170.0	87.3	116.4	145.4	99.6	132.8	166.0
54-1/4		77.5	103.4	129.2	133.3	170.0	170.0	98.6	131.5	164.4	80.3	107.1	133.8	91.7	122.2	152.8
60-1/4		72.3	96.4	120.5	124.3	165.7	170.0	92.0	122.6	153.3	74.9	99.8	124.8	85.5	114.0	142.5
24-1/4	120	139.7	170.0	170.0	170.0	170.0	170.0	170.0	170.0	170.0	144.7	170.0	170.0	165.1	170.0	170.0
30-1/4		115.2	153.6	170.0	170.0	170.0	170.0	146.5	170.0	170.0	119.3	159.0	170.0	136.2	170.0	170.0
36-1/4		99.0	132.0	164.9	170.0	170.0	170.0	125.9	167.8	170.0	102.5	136.6	170.0	117.0	156.0	170.0
42-1/4		87.5	116.6	145.8	150.4	170.0	170.0	111.3	148.4	170.0	90.6	120.8	151.0	103.4	137.9	170.0
48-1/4		79.0	105.3	131.7	135.8	170.0	170.0	100.5	134.0	167.5	81.8	109.1	136.3	93.4	124.5	155.6
54-1/4		72.5	96.7	120.9	124.7	166.2	170.0	92.3	123.0	153.8	75.1	100.1	125.2	85.7	114.3	142.9
60-1/4		67.5	90.0	112.5	116.0	154.7	170.0	85.8	114.5	143.1	69.9	93.2	116.5	79.8	106.4	133.0

INTERPOLATION BETWEEN WIDTHS AND HEIGHTS ACCEPTABLE

NOTE:
SEE SHEET 8 FOR ANCHOR TYPES AND DETAILS.
ANCHOR CAPACITIES LISTED ON THIS SHEET TO BE USED IN CONJUNCTION WITH GLASS/REINFORCING AND MULLION CHARTS IN THIS DOCUMENT.
LOWER APPLICABLE VALUES CONTROL.

PRODUCT REVISED
as complying with the Florida Building Code
Acceptance No 09-1209.06
Expiration Date 06/12/2012
By
Miami-Dade Product Control Division

Engr: ARSHAD VIQAR
CIVIL
FLA. PE # 38863
C.A.N. 3538

DEC 03 2009

AL-FAROOQ CORPORATION
ENGINEERS & PRODUCT DEVELOPMENT
1235 S.W. 87 AVE
MIAMI, FLORIDA 33174
TEL. (305) 264-8100 FAX. (305) 262-6976
COMP-ANL\W08-14CGI

SERIES-560 ALUM SLIDING GLASS DOOR (L.M.I.)

CGI WINDOWS & DOORS
10100 N.W. 25TH STREET
MIAMI, FL. 33172
TEL. (305) 593-6590 FAX. (305) 593-6592

revisions: no	date	by	description
A	04.18.08		REV. PER BCCO COMMENTS
B	05.16.08		REV. PER BCCO COMMENTS
C	11.06.09		NO CHANGE THIS SHEET

date: 02-06-08
scale: -
dr. by: HAMID
chk. by:

drawing no. W08-14

DESIGN LOAD CAPACITY – PSF (ANCHORS)

PANEL WIDTH INCHES	DOOR HEIGHT INCHES	ANCHORS TYPE 'D' 1/2" SHIM SPACE CLUSTER OF 3	4	5	ANCHORS TYPE 'E' 1/4" SHIM SPACE CLUSTER OF 3	4	5	3/8" SHIM SPACE CLUSTER OF 3	4	5	1/2" SHIM SPACE CLUSTER OF 3	4	5
24-1/4	80	170.0	170.0	170.0	170.0	170.0	170.0	170.0	170.0	170.0	170.0	170.0	170.0
30-1/4		149.0	170.0	170.0	170.0	170.0	170.0	170.0	170.0	170.0	154.2	170.0	170.0
36-1/4		130.3	170.0	170.0	170.0	170.0	170.0	165.8	170.0	170.0	134.9	170.0	170.0
42-1/4		117.5	156.7	170.0	170.0	170.0	170.0	149.5	170.0	170.0	121.7	162.3	170.0
48-1/4		108.4	144.5	170.0	170.0	170.0	170.0	137.9	170.0	170.0	112.3	149.8	170.0
54-1/4		101.9	135.8	169.9	170.0	170.0	170.0	129.6	170.0	170.0	105.5	140.8	170.0
60-1/4		97.3	129.7	162.2	167.2	170.0	170.0	123.7	165.0	170.0	100.7	134.4	167.9
24-1/4	84	167.7	170.0	170.0	170.0	170.0	170.0	170.0	170.0	170.0	170.0	170.0	170.0
30-1/4		140.3	170.0	170.0	170.0	170.0	170.0	170.0	170.0	170.0	145.3	170.0	170.0
36-1/4		122.4	163.2	170.0	170.0	170.0	170.0	155.7	170.0	170.0	126.8	169.1	170.0
42-1/4		110.0	146.7	170.0	170.0	170.0	170.0	140.0	170.0	170.0	113.9	152.0	170.0
48-1/4		101.2	134.9	168.7	170.0	170.0	170.0	128.7	170.0	170.0	104.8	139.8	170.0
54-1/4		94.7	126.3	157.9	162.9	170.0	170.0	120.5	160.7	170.0	98.1	130.9	163.5
60-1/4		90.1	120.0	150.1	154.8	170.0	170.0	114.5	152.8	170.0	93.3	124.4	155.4
24-1/4	90	154.8	170.0	170.0	170.0	170.0	170.0	170.0	170.0	170.0	160.3	170.0	170.0
30-1/4		129.1	170.0	170.0	170.0	170.0	170.0	164.2	170.0	170.0	133.6	170.0	170.0
36-1/4		112.2	149.6	170.0	170.0	170.0	170.0	142.7	170.0	170.0	116.2	155.0	170.0
42-1/4		100.5	133.9	167.5	170.0	170.0	170.0	127.8	170.0	170.0	104.0	138.8	170.0
48-1/4		92.0	122.6	153.3	158.1	170.0	170.0	117.0	156.0	170.0	95.2	127.0	158.7
54-1/4		85.7	114.2	142.9	147.3	170.0	170.0	109.0	145.4	170.0	88.7	118.4	147.9
60-1/4		81.0	108.0	135.1	139.3	170.0	170.0	103.1	137.5	170.0	83.9	111.9	139.9
24-1/4	96	143.7	170.0	170.0	170.0	170.0	170.0	170.0	170.0	170.0	148.8	170.0	170.0
30-1/4		119.5	159.3	170.0	170.0	170.0	170.0	152.0	170.0	170.0	123.7	165.0	170.0
36-1/4		103.6	138.0	170.0	170.0	170.0	170.0	131.7	170.0	170.0	107.2	143.0	170.0
42-1/4		92.4	123.2	154.0	158.9	170.0	170.0	117.5	156.8	170.0	95.7	127.6	159.5
48-1/4		84.3	112.4	140.5	144.9	170.0	170.0	107.2	143.0	170.0	87.3	116.4	145.5
54-1/4		78.2	104.3	130.4	134.5	170.0	170.0	99.5	132.7	165.9	81.0	108.1	135.0
60-1/4		73.7	98.2	122.8	126.6	168.8	170.0	93.7	125.0	156.2	76.3	101.7	127.1
24-1/4	102	134.1	170.0	170.0	170.0	170.0	170.0	170.0	170.0	170.0	138.9	170.0	170.0
30-1/4		111.2	148.3	170.0	170.0	170.0	170.0	141.5	170.0	170.0	115.2	153.6	170.0
36-1/4		96.1	128.2	160.3	165.3	170.0	170.0	122.3	163.1	170.0	99.6	132.8	166.0
42-1/4		85.5	114.0	142.6	147.1	170.0	170.0	108.8	145.1	170.0	88.6	118.2	147.7
48-1/4		77.8	103.7	129.7	133.7	170.0	170.0	99.0	132.0	164.9	80.6	107.5	134.3
54-1/4		72.0	95.9	120.0	123.7	164.9	170.0	91.5	122.1	152.6	74.5	99.4	124.2
60-1/4		67.5	90.0	112.5	116.1	154.7	170.0	85.9	114.5	143.1	69.9	93.2	116.5
24-1/4	108	125.7	167.6	170.0	170.0	170.0	170.0	159.9	170.0	170.0	130.2	170.0	170.0
30-1/4		104.0	138.7	170.0	170.0	170.0	170.0	132.3	170.0	170.0	107.7	143.7	170.0
36-1/4		89.7	119.6	149.6	154.3	170.0	170.0	114.1	152.2	170.0	92.9	123.9	154.9
42-1/4		79.6	106.2	132.8	136.9	170.0	170.0	101.3	135.1	168.9	82.5	110.0	137.5
48-1/4		72.2	96.3	120.4	124.2	165.5	170.0	91.9	122.5	153.1	74.8	99.8	124.7
54-1/4		66.6	88.8	111.1	114.5	152.7	170.0	84.7	113.0	141.3	69.0	92.0	115.0
60-1/4		62.3	83.0	103.9	107.1	142.8	170.0	79.2	105.7	132.1	64.5	86.1	107.5
24-1/4	114	118.3	157.7	170.0	170.0	170.0	170.0	150.5	170.0	170.0	122.5	163.4	170.0
30-1/4		97.7	130.3	162.9	168.0	170.0	170.0	124.3	165.8	170.0	101.2	135.0	168.7
36-1/4		84.1	112.1	140.2	144.6	170.0	170.0	107.0	142.7	170.0	87.1	116.2	145.2
42-1/4		74.5	99.3	124.2	128.1	170.0	170.0	94.8	126.4	157.9	77.1	102.9	128.6
48-1/4		67.4	89.9	112.4	115.9	154.5	170.0	85.7	114.4	142.9	69.8	93.1	116.4
54-1/4		62.0	82.7	103.4	106.6	142.1	170.0	78.9	105.2	131.5	64.2	85.7	107.1
60-1/4		57.8	77.1	96.4	99.4	132.6	165.7	73.6	98.1	122.6	59.9	79.9	99.8
24-1/4	120	111.7	149.8	170.0	170.0	170.0	170.0	142.1	170.0	170.0	115.7	154.4	170.0
30-1/4		92.1	122.8	153.6	158.4	170.0	170.0	117.2	156.3	170.0	95.4	127.3	159.0
36-1/4		79.2	105.5	132.0	136.1	170.0	170.0	100.7	134.3	167.8	82.0	109.3	136.6
42-1/4		70.0	93.3	116.6	120.3	160.4	170.0	89.0	118.7	148.4	72.5	96.7	120.8
48-1/4		63.2	84.2	105.3	108.6	144.8	170.0	80.4	107.2	134.0	65.4	87.3	109.1
54-1/4		58.0	77.3	96.7	99.7	133.0	166.2	73.8	98.4	123.0	60.1	80.1	100.1
60-1/4		54.0	72.0	90.0	92.8	123.7	154.7	68.7	91.6	114.5	55.9	74.6	93.2

INTERPOLATION BETWEEN WIDTHS AND HEIGHTS ACCEPTABLE

NOTE:
SEE SHEET 8 FOR ANCHOR TYPES AND DETAILS.
ANCHOR CAPACITIES LISTED ON THIS SHEET TO BE USED IN CONJUNCTION WITH GLASS/REINFORCING AND MULLION CHARTS IN THIS DOCUMENT.
LOWER APPLICABLE VALUES CONTROL.

Engr: ARSHAD VIQAR
CIVIL
FLA. PE # 38863
C.A.N. 3538
DEC 0 3 2009

PRODUCT REVISED
as complying with the Florida Building Code
Acceptance No 09-1209.06
Expiration Date 06/12/2012
By
Miami Dade Product Control Division

AL-FAROOQ CORPORATION
ENGINEERS & PRODUCT DEVELOPMENT
1235 S.W. 87 AVE
MIAMI, FLORIDA 33174
TEL. (305) 264-8100 FAX. (305) 262-6978
COMP-ANL\W08-14CGI

SERIES-560 ALUM SLIDING GLASS DOOR (L.M.I.)

CGI WINDOWS & DOORS
10100 N.W. 25TH STREET
MIAMI, FL. 33172
TEL. (305) 593-6590 FAX. (305) 593-6592

revisions: no	date	by	description
B	05.16.08		REV. PER BCCO COMMENTS
C	11.06.08		NO CHANGE THIS SHEET

date: 02-08-08
scale: -
dr. by: NAMID
chk. by:

drawing no. W08-14

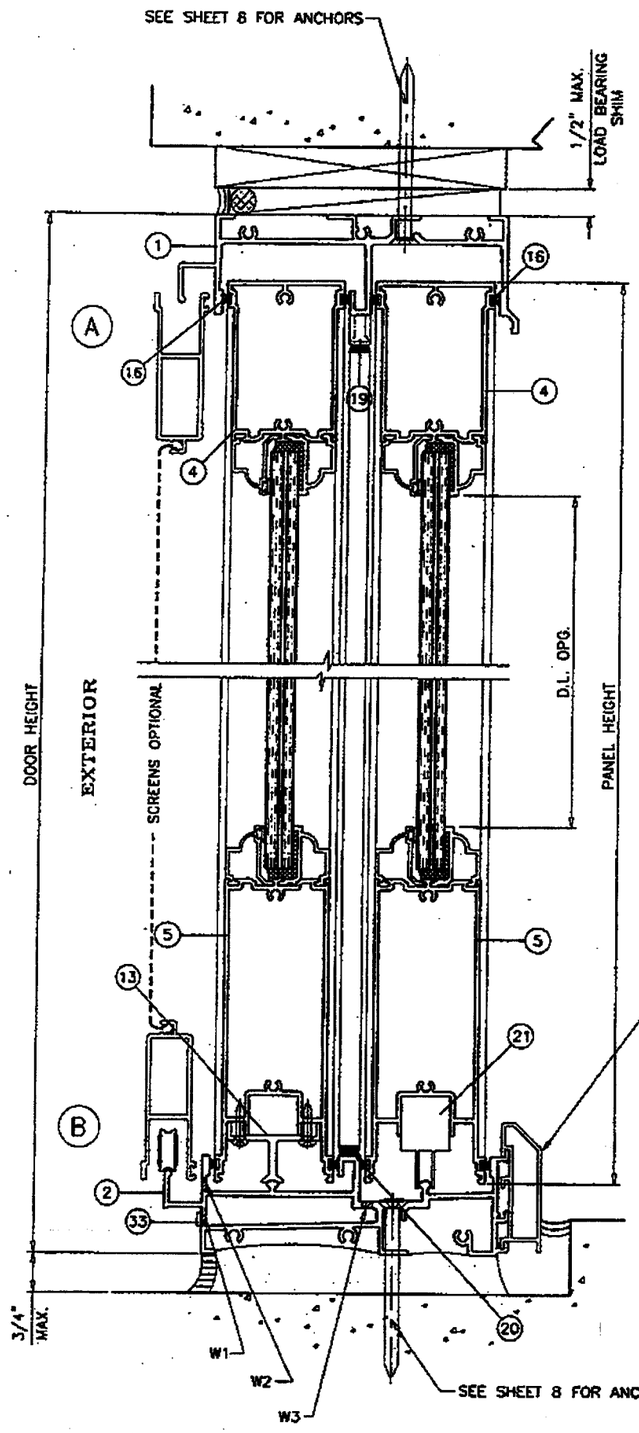

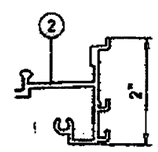

SILL WITHOUT RISER NOT APPROVED FOR INSTALLATIONS WHERE WATER INFILTRATION RESISTANCE IS REQUIRED.
MAX. DESIGN LOAD FOR THIS SILL IS THE SAME AS 4-1/4" RISER.

WEEPS:

W1 = .30" X 1-5/8" WEEP SLOTS WITH PLASTIC COVER AT 9" FROM EACH END AND ±48" O.C.

W2 = 1/4" X 2" WEEP SLOTS AT 4" FROM EACH END AND ±12" O.C.

W3 = 1/4" X 5/8" WEEP HOLES AT 9" FROM EACH END AND ±48" O.C.

Engr: ARSHAD VAQAR
CIVIL
FLA. PE # 38863
C.A.N. 3538

DEC 03 2009

PRODUCT REVISED
as complying with the Florida Building Code
Acceptance No 09-1209.06
Expiration Date 06/12/2012
By
Miami Dade Product Control Division

AL-FAROOQ CORPORATION
ENGINEERS & PRODUCT DEVELOPMENT
1235 S.W. 87 AVE
MIAMI, FLORIDA 33174
TEL. (305) 264-6100 FAX. (305) 262-6978
COMP-ANL\W08-14CGI

SERIES-560 ALUM SLIDING GLASS DOOR (L.M.I.)

CGI WINDOWS & DOORS
10100 N.W. 25TH STREET
MIAMI, FL. 33172
TEL. (305) 593-6590 FAX. (305) 593-6592

revisions:

no	date	by	description
A	04.18.08		REV. PER BCCO COMMENTS
B	05.16.08		REV. PER BCCO COMMENTS
C	11.06.09		NO CHANGE THIS SHEET

date: 02-08-08
scale: 3/8" = 1"
dr. by: HAMID
chk. by: -

drawing no.
W08-14

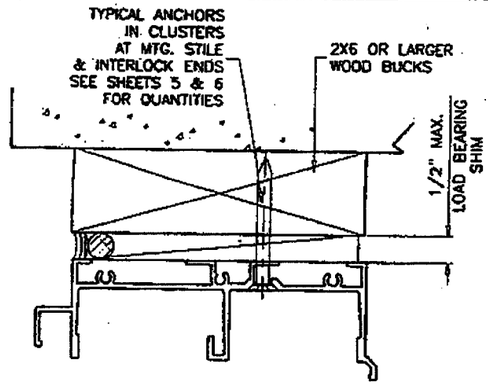

ANCHORS TYPES A AND D
INTO 2BY WOOD BUCKS
OR WOOD STRUCTURES

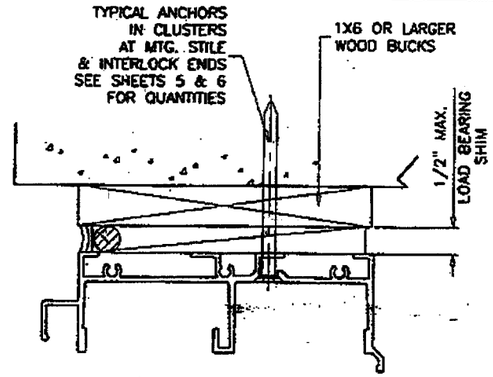

ANCHORS TYPES A AND D
THRU 1BY WOOD BUCKS
INTO 3 KSI CONCRETE

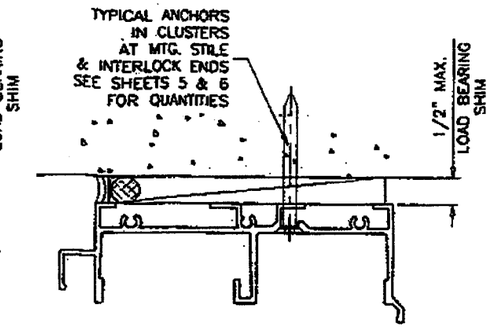

ANCHORS TYPES B AND E
DIRECTLY INTO 3 KSI CONCRETE

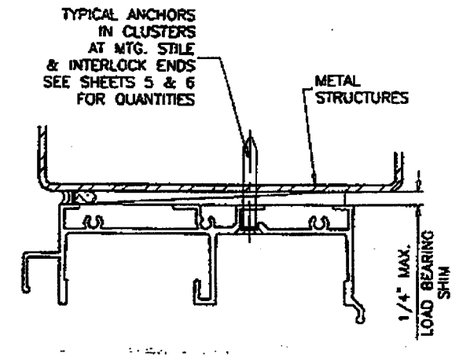

ANCHORS TYPES C
INTO METAL STRUCTURES
OR APPROVED MULLIONS

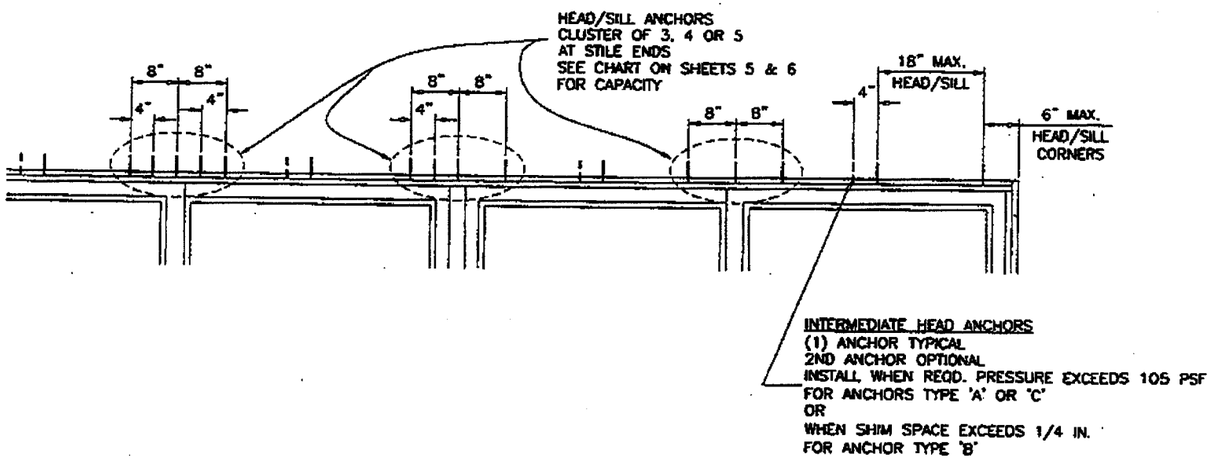

ANCHORS TYPES B
DIRECTLY INTO 3 KSI CONCRETE

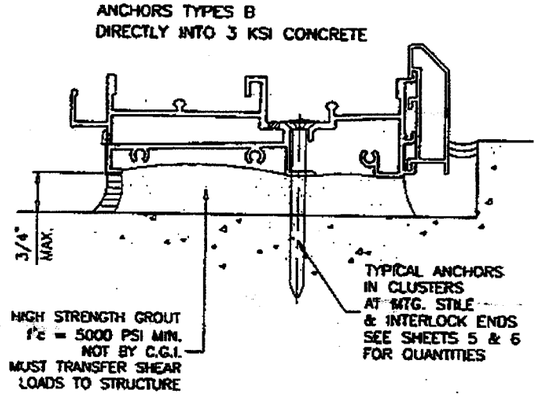

TYPICAL ANCHORS: SEE ELEV. FOR SPACING

TYPE 'A' – 5/16" DIA ULTRACON BY 'ELCO' (Fu=177 KSI, Fy=155 KSI)
INTO 2BY WOOD BUCKS OR WOOD STRUCTURES
WITH 1-1/2" MIN. PENETRATION INTO WOOD

THRU 1BY WOOD BUCKS INTO CONCRETE
WITH 1-1/4" MIN. EMBED INTO CONCRETE

TYPE 'B' – 5/16" DIA ULTRACON BY 'ELCO' (Fu=177 KSI, Fy=155 KSI)
DIRECTLY INTO CONCRETE
WITH 1-1/4" MIN. EMBED INTO CONC.

TYPE 'C' – #14 SMS OR SELF DRILLING SCREWS ST/ST (GRADE 2 CRS)
INTO METAL STRUCTURES
STEEL : 12 GA. MIN. (Fy = 36 KSI MIN.)
ALUMINUM : 1/8" THK. MIN. (6063-T5 MIN.)
(STEEL IN CONTACT WITH ALUMINUM TO BE PLATED OR PAINTED)

TYPE 'D' – 1/4" DIA HILTI KWIK-CON II (Fu=163 KSI, Fy=157 KSI)
INTO 2BY WOOD BUCKS OR WOOD STRUCTURES
WITH 1-1/2" MIN. PENETRATION INTO WOOD

THRU 1BY WOOD BUCKS INTO CONCRETE
WITH 1-1/4" MIN. EMBED INTO CONCRETE

TYPE 'E' – 1/4" DIA HILTI KWIK-CON II (Fu=163 KSI, Fy=157 KSI)
DIRECTLY INTO CONCRETE
WITH 1-1/4" MIN. EMBED INTO CONC.

ANCHOR EDGE DISTANCES

INTO CONCRETE AND MASONRY = 2-1/2" MIN. AT 1/4" ANCHOR
INTO CONCRETE AND MASONRY = 3-1/8" MIN. AT 5/16" ANCHOR
INTO WOOD STRUCTURE = 1" MIN.
INTO METAL STRUCTURE = 1/2" MIN.

WOOD BUCKS AND METAL STRUCTURES NOT BY CGI WINDOWS MUST SUSTAIN LOADS IMPOSED BY GLAZING SYSTEM AND TRANSFER THEM TO THE BUILDING STRUCTURE.

Engr: ARSHAD VIQAR
CIVIL
FLA. PE # 38863
C.A.N. 3538

DEC 0 3 2009

PRODUCT REVISED
as complying with the Florida
Building Code
Acceptance No 09-1209.06
Expiration Date 06/12/2012
By
Miami Dade Product Control
Division

AL-FAROOQ CORPORATION
ENGINEERS & PRODUCT DEVELOPMENT
1235 S.W. 87 AVE
MIAMI, FLORIDA 33174
TEL. (305) 264-8100 FAX. (305) 262-6978
COMP-ANL\W08-14CGI

SERIES-560 ALUM SLIDING GLASS DOOR (L.N.I.)

CGI WINDOWS & DOORS
10100 N.W. 25TH STREET
MIAMI, FL. 33172
TEL. (305) 593-6590 FAX. (305) 593-6582

revisions:			
no	date	by	description
A	04.18.08		REV. PER BCCO COMMENTS
B	05.16.08		REV. PER BCCO COMMENTS
C	11.06.09		NO CHANGE THIS SHEET

date: 02-08-08
scale: 3/8" = 1"
dr. by: HAMID
chk. by:

drawing no.
W08-14

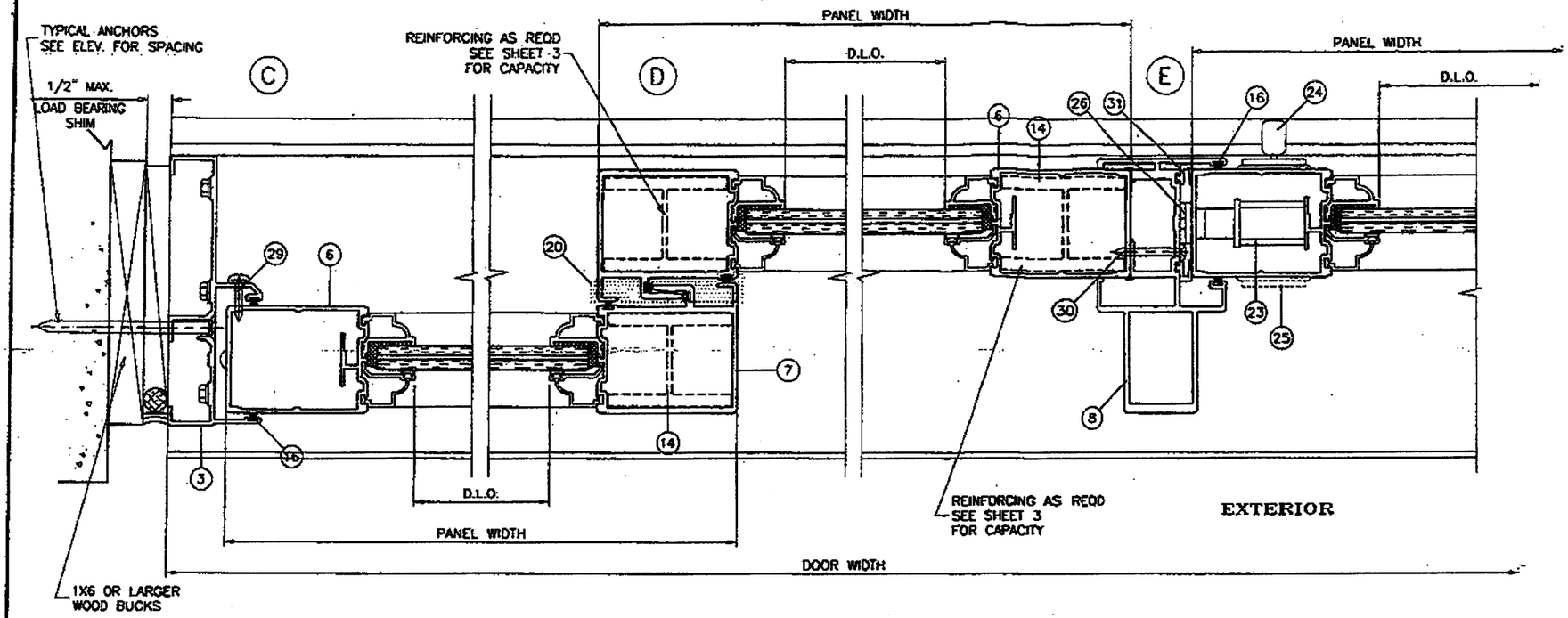

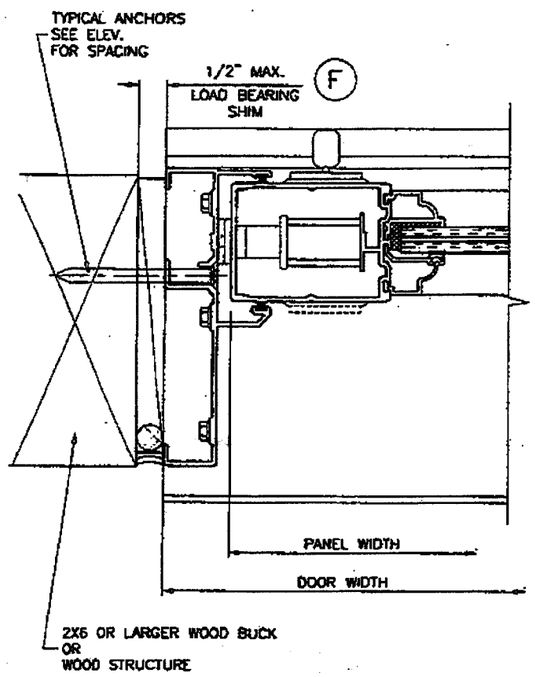

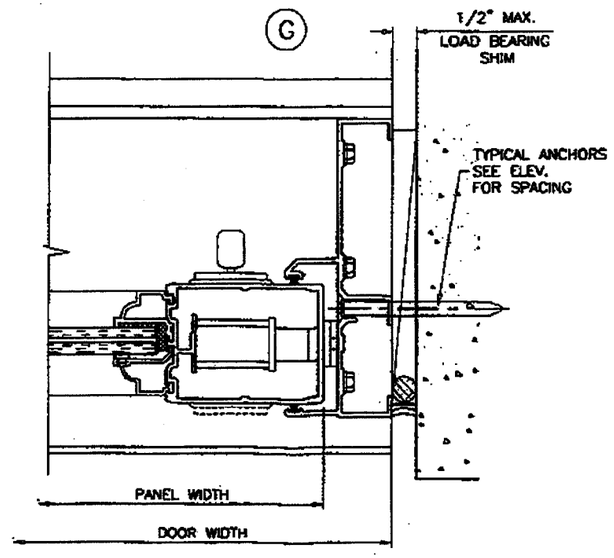

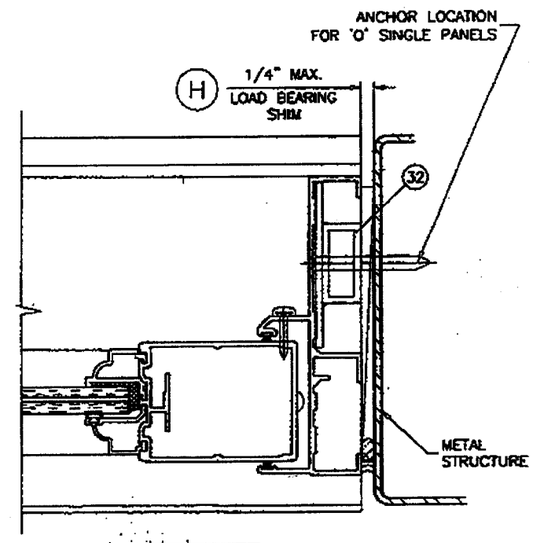

Engr: ARSHAD VIQAR
CIVIL
FLA. PE # 38863
C.A.N. 3538

DEC 03 2009

PRODUCT REVISED
as complying with the Florida
Building Code
Acceptance No 09-1209.06
Expiration Date 06/12/2012
By
Miami Dade Product Control
Division

AL-FAROOQ CORPORATION
ENGINEERS & PRODUCT DEVELOPMENT
1238 S.W. 67 AVE
MIAMI, FLORIDA 33174
TEL. (305) 264-6100 FAX. (305) 262-6978
COMP-ANL\WOB-14CGI

SERIES-560 ALUM SLIDING GLASS DOOR (L.M.I.)

CGI WINDOWS & DOORS
10100 N.W. 25TH STREET
MIAMI, FL. 33172
TEL. (305) 593-6590 FAX. (305) 593-6592

revisions:

no	date	by	description
A	04.18.08		REV. PER BCCO COMMENTS
B	05.16.08		NO CHANGE THIS SHEET
C	11.06.08		NO CHANGE THIS SHEET

date: 02-08-08
scale: 3/8" = 1"
dr. by: HAMID
chk. by:

drawing no.
W08-14

POCKET HOOK ANCHOR CAPACITY - PSF

ANCHORS TYPE	SUBSTRATE	MIN. EMBED.	MIN. EDGE DIST.	PANEL WIDTHS 36-1/4"	42-1/4"	48-1/4"	54-1/4"	60-1/4"
1/4" DIA. ULTRACONS BY 'ELCO' (Fu=177 KSI, Fy=155 KSI)	MASONRY	1-1/4"	1"	99.0	85.0	75.0	66.0	60.0
	CONCRETE	1-3/4"	1"	170.0	159.0	139.0	124.0	112.0
1/4" DIA. KWIK-CON II BY 'HILTI' (Fu=163 KSI, Fy=157 KSI)	MASONRY.	1-1/4"	1"	83.0	71.0	62.0	55.0	50.0
	CONCRETE	1-3/4"	1"	140.0	120.0	105.0	94.0	84.0
#14 SMS (GRADE 2 CRS)	WOOD	1-1/2"	3/4"	170.0	170.0	150.0	133.0	120.0

ABOVE CHART IS FOR 12" TYP. ANCHOR SPACING
FOR 6" SPACING MULTIPLY CAPACITY X2.

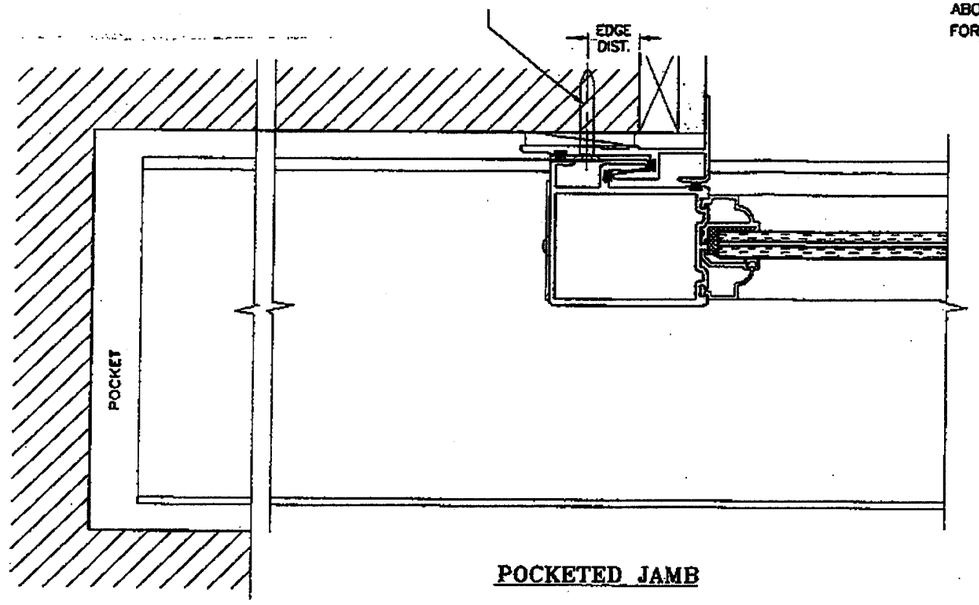

POCKETED JAMB

Engr: ARSHAD VIQAR
CIVIL
FLA. PE # 38863
C.A.N. 3538

DEC 03 2009

PRODUCT REVISED
as complying with the Florida
Building Code
Acceptance No 09-1209.06
Expiration Date 06/12/2012
By
Miami Dade Product Control
Division

AL-FAROOQ CORPORATION
ENGINEERS & PRODUCT DEVELOPMENT
1235 S.W. 87 AVE
MIAMI, FLORIDA 33174
TEL. (305) 264-8100 FAX. (305) 262-6978
COMP-ANL\W08-14CGI

SERIES-560 ALUM SLIDING GLASS DOOR (L.M.I.)

CGI WINDOWS & DOORS
10100 N.W. 25TH STREET
MIAMI, FL. 33172
TEL. (305) 593-6590 FAX. (305) 593-6592

revisions:

no	date	by	description
C	11.06.09		POCKET DOOR OPTION ADDED

date: 02-08-08
scale: 3/8" = 1"
dr. by: HAMID
chk. by:

drawing no.
W08-14

sheet 9.1 of 13

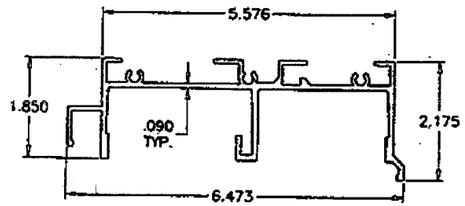

1 FRAME HEAD

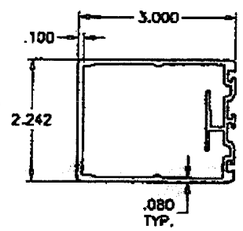

6 JAMB/LOCK STILE

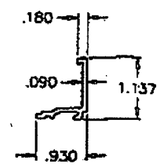

12 INSUL. GLASS ADAPTER

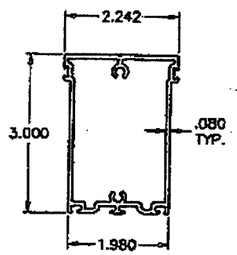

4 TOP RAIL

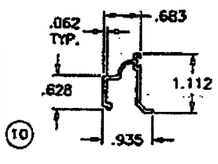

10

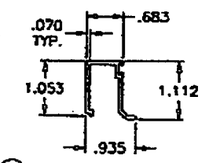

10A GLAZING BEADS

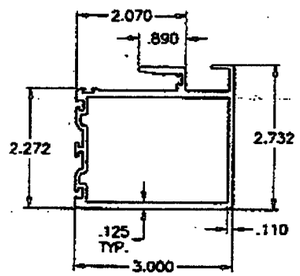

7 INTERLOCK STILE

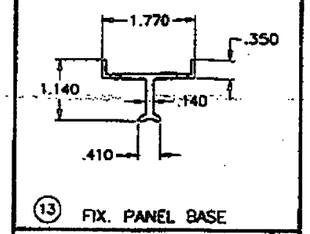

13 FIX. PANEL BASE

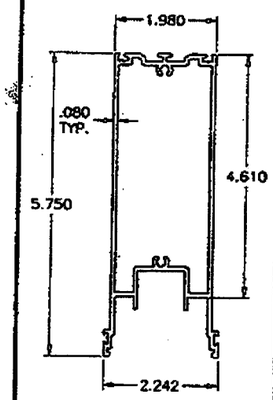

5 BOTTOM RAIL

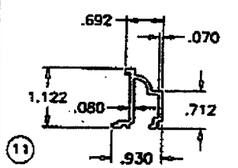

11

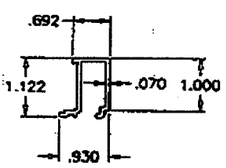

11A GLASS ADAPTERS

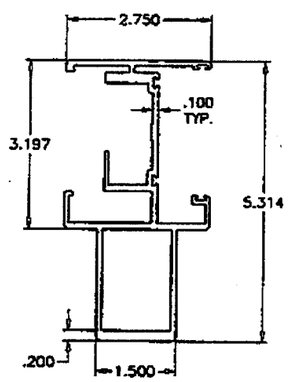

8 ASTRAGAL STILE

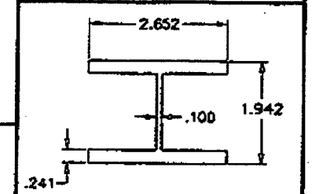

14 STILE REINFORCING

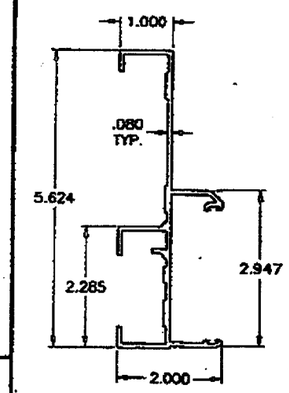

3 FRAME JAMB

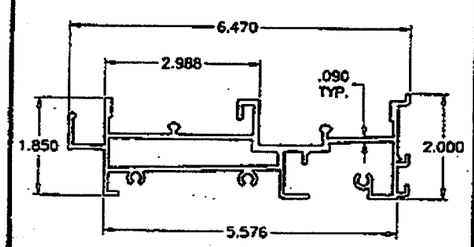

2 FRAME SILL

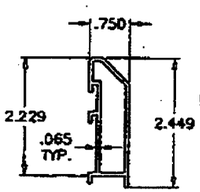

9 SILL RISER (STANDARD)

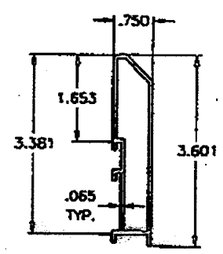

9A SILL RISER (HI-RISE)

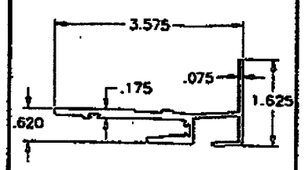

15 POCKET DOOR HOOK

Engr: ARSHAD VIDAR
CIVIL
FLA. PE # 38863
C.A.N. 3538

DEC 0 3 2009

PRODUCT REVISED
as complying with the Florida
Building Code
Acceptance No 09-1209.06
Expiration Date 06/12/2012
By
Miami Dade Product Control
Division

AL-FAROOQ CORPORATION
ENGINEERS & PRODUCT DEVELOPMENT
1235 S.W. 87 AVE
MIAMI, FLORIDA 33174
TEL. (305) 264-8100 FAX. (305) 262-6978
COMP-ANL WOB-14CGI

SERIES-560 ALUM SLIDING GLASS DOOR (L.M.I.)

CGI WINDOWS & DOORS
10100 N.W. 25TH STREET
MIAMI, FL. 33172
TEL. (305) 593-8590 FAX. (305) 593-6592

revisions:

no	date	by	description
A	04.18.08		REV. PER BCCO COMMENTS
B	05.16.08		NO CHANGE THIS SHEET
C	11.08.08		POCKET DOOR OPTION ADDED

date: 02-08-08
scale: 3/8" = 1"
dr. by: HAMID
chk. by:

drawing no.
W08-14

sheet 10 of 13

ITEM #	PART #	QUANTITY	DESCRIPTION	MATERIAL	MANF./SUPPLIER/REMARKS
1	CGI-550	1	FRAME HEAD	6063-T6	–
2	CGI-551	1	FRAME SILL	6063-T6	–
3	CGI-552	2	FRAME JAMB	6063-T6	–
4	CGI-555	1/ PANEL	TOP RAIL	6063-T6	–
5	CGI-556	1/ PANEL	BOTTOM RAIL	6063-T6	–
6	CGI-557	2/ PANEL	JAMB/LOCK STILE	6063-T6	–
7	CGI-558	AS REQD.	INTERLOCK	6063-T6	–
8	CGI-559	AS REQD.	ASTRAGAL STILE	6063-T6	–
9	CGI-563	AS REQD.	SILL RISER (STANDARD)	6063-T5	–
9A	CGI-553	AS REQD.	SILL RISER (HI-RISE)	6063-T5	–
10	CGI-561	AS REQD.	GLAZING BEAD (COLONIAL)	6063-T5	–
10A	CGI-563	AS REQD.	GLAZING BEAD (SQUARE)	6063-T5	–
11	CGI-562	AS REQD.	GLASS ADAPTER (COLONIAL)	6063-T5	–
11A	CGI-564	AS REQD.	GLASS ADAPTER (SQUARE)	6063-T5	–
12	CGI-565	AS REQD.	GLASS ADAPTER (INSUL. LAM. GLASS)	6063-T6	–
13	CGI-585	2/ FIX. PANEL	FIX. PANEL BASE, 2" LONG	6063-T5	ATTACHED WITH #8 X 3/4" PH PH TEKS
14	CGI-560	AS REQD.	STILE REINFORCING	6063-T6	LENGTH = DOOR HT. – 14"
15	CGI-577	AS REQD.	POCKET DOOR HOOK	6063-T6	–
16	VARIES	VARIES	WOOL PILE WEATHERSTRIPPING WITH FIN	PILE	ULTRAFAB OR EQUAL	.187 BASE X .290 TRI-FIN (USED HORIZONTALLY) .187 BASE X .290 SINGLE CENTER FIN (USED VERTICALLY)
17	CGI-382V	VARIES	GLAZING BEAD BULB	VINYL	CUSTOM EXTRUDED	
18	SILICONE	VARIES	STRUCTURAL SILICONE	RUBBER	GE 1200 OR DOW 995	
19	CGI-584	1	ANTI-LIFT BLOCK	GL REINF NYLON	CUSTOM CGI PART	ABOVE INTERLOCK ATTACHED W/ (2) #10X1" SMS
20	CGI-586	1	ADHESIVE BACKED PILE PAD (.300" HIGH)	PILE	ULTRAFAB OR EQUAL	AT BOTTOM OF EACH INTERLOCK
21	TA-51 OR TA-84	2/ MOV. PANEL	TANDEM S/S ROLLER	S/S	BUILDERS HRDW. OR EQUAL	ATTACHED WITH #8 X 3/4" PH PH TEKS
23	CH-200	1	M.S. COMMERCIAL HOOK BOLT LOCK	S/S MECH.	CUSTOM PART	INCLUDES CGI-580 FACE PLATE TRIM
24	CH-107	1	BRASS THUMBTURN	BRASS/ZINC	CUSTOM PART	1 REQUIRED PER HOOK BOLT
25	CH-109	OPT.	BRASS KEYED EXTERIOR CYLINDER	BRASS/ZINC	CUSTOM PART	OPTIONAL PART
26	CGI-581	1	.850 X 3.875 S/S KEEPER	S/S	CUSTOM PART	ATTACHED W/ (3) #10 X 1" TRUSS HEAD SMS
27	SCREW (FRAME)	12	#12 X 1 1/4" HEX HEAD S/S SMS	S/S	VARIOUS	3 SCREWS PER FRAME CORNER
28	SCREW (PANEL)	8	#10 X 1 1/4" PAN HEAD S/S SMS	S/S	VARIOUS	2 SCREWS PER PANEL CORNER
29	SCREW	2	#8 X 1 1/2" FLAT HEAD TEKS S/S	S/S	VARIOUS	(2) PER FIXED PANEL AT MAXIMUM OF 24" FROM TOP & BOTTOM MOUNTED ON PLASTIC COVER
30	SCREW	VARIES	#10 X 1 1/2" PAN HEAD TEKS S/S	S/S	VARIOUS	AT 6" FROM ENDS AND 24" ON CENTER MAX.
31	CGI-599	VARIES	RUBBER SEAL	RUBBER/FOAM	CUSTOM PART	
32	SIDELITE JAMB CLIP	1/SCREW	3" LONG CLIP (AT "O" CONFIGURATION)	ALUM	CUSTOM PART	CONSISTS OF 1/8 X 3 1/8 X 3" LG PLATE GLUED TO 3/4 X 1 1/2 X 1/8 THK X 3" LG. TUBE
33	HI-FLO WEEPER	VARIES	WEEP HOLE AND COVER	NYLON	PEP	1 WEEP AND COVER AT 9" FROM ENDS AND AT CENTER LINE OF INTERLOCK OR ASTRAGAL

SEALANTS:

ALL FRAME AND PANEL JOINT, INSTALLATION SCREWS AND HEADS OF ANCHOR SCREWS AT SILL TO BE SEALED WITH WHITE/ALUM COLORED SILICONE.

Engr: ARSHAD VIQAR
CIVIL
FLA. PE # 38863
C.A.N. 3538

DEC 0 3 2009

PRODUCT REVISED
as complying with the Florida Building Code
Acceptance No 09-1209.06
Expiration Date 06/12/2012
By
Miami Dade Product Control Division

AL-FAROOQ CORPORATION
ENGINEERS & PRODUCT DEVELOPMENT
1235 S.W. 87 AVE
MIAMI, FLORIDA 33174
TEL. (305) 264-8100 FAX. (305) 262-6978

COMP-ANL\W08-14CGI

SERIES-560 ALUM SLIDING GLASS DOOR (L.M.I.)

CGI WINDOWS & DOORS
10100 N.W. 25TH STREET
MIAMI, FL. 33172
TEL. (305) 593-6590 FAX. (305) 593-6592

revisions:

no	date	by	description
A	04.18.08		REV. PER BCCO COMMENTS
B	05.18.08		NO CHANGE THIS SHEET
C	11.06.09		POCKET DOOR OPTION ADDED

date: 02-08-08
scale: 3/8" = 1"
dr. by: HAMID
chk. by:

drawing no. W08-14

sheet 11 of 13

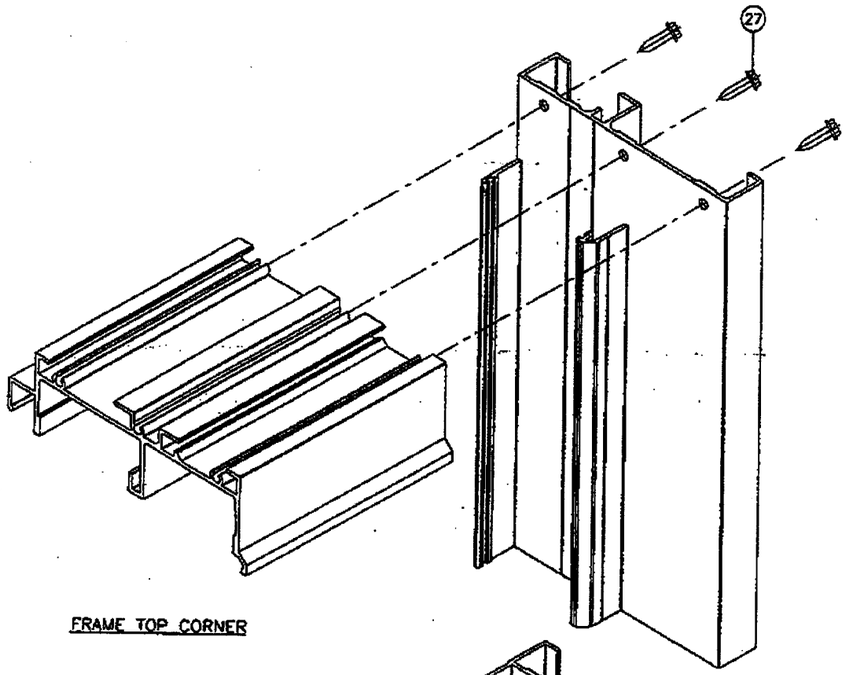

FRAME TOP CORNER

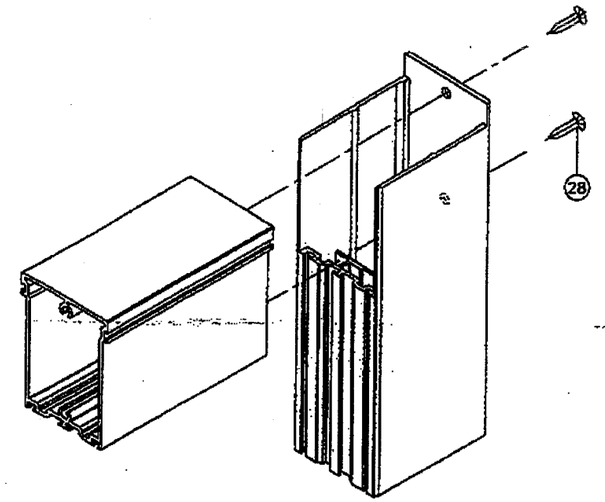

PANEL TOP CORNER

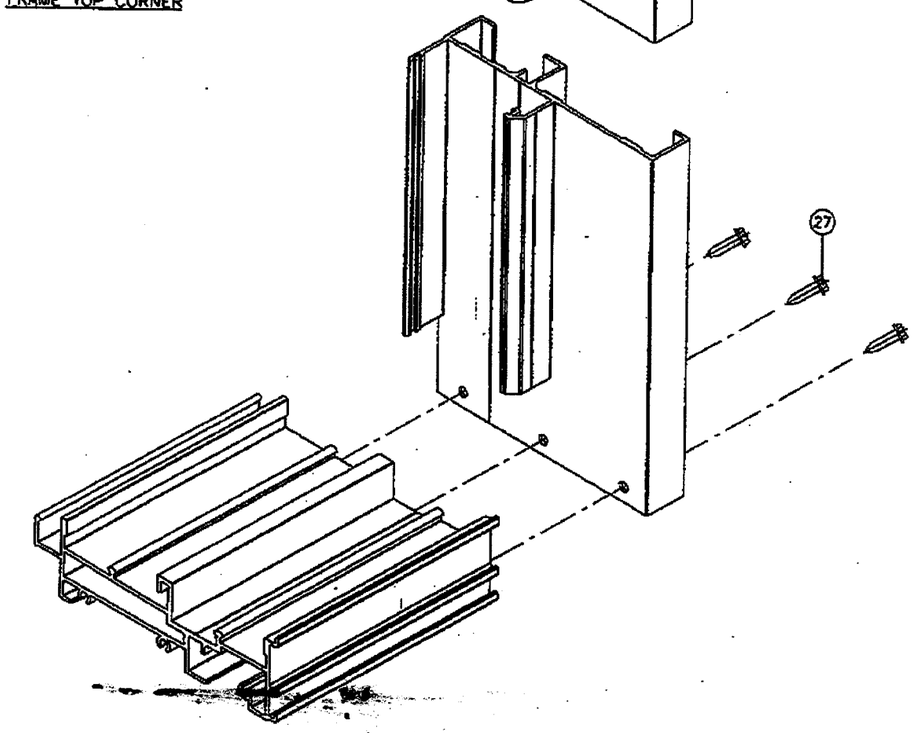

FRAME BOTTOM CORNER

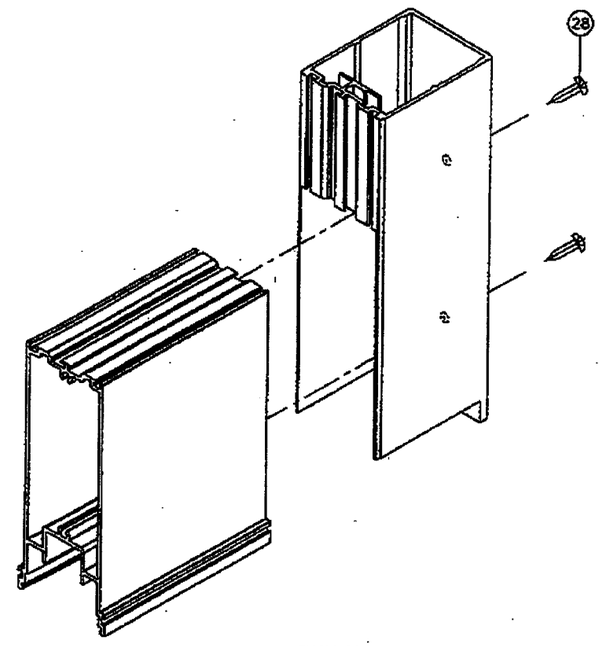

PANEL BOTTOM CORNER

Engr: ARSHAD NIZAR
CIVIL
FLA. PE # 38863
C.A.N. 3538

DEC 0 3 2009

PRODUCT REVISED
is complying with the Florida
Building Code
Acceptance No 09-1209.06
Expiration Date 06/12/2012
By
Miami Dade Product Control
Division

AL-FAROOQ CORPORATION
ENGINEERS & PRODUCT DEVELOPMENT
1235 S.W. 87 AVE
MIAMI, FLORIDA 33174
TEL. (305) 264-8100 FAX. (305) 262-6978
COMP-ANL\W08-14CGI

SERIES-560 ALUM SLIDING GLASS DOOR (L.M.I.)

CGI WINDOWS & DOORS
10100 N.W. 25TH STREET
MIAMI, FL. 33172
TEL. (305) 593-6590 FAX. (305) 593-6592

revisions:

no	date	by	description
A	04.16.08		REV. PER BCCO COMMENTS
B	05.16.08		NO CHANGE THIS SHEET
C	11.06.09		NO CHANGE THIS SHEET

date: 02-06-08
scale: 3/8" = 1"
dr. by: HAMID
chk. by:

drawing no.
W08-14

sheet 12 of 13

MULLION LOAD CAPACITY – PSF			
DIMS.		2 X 6 X 1/8"	2 X 8 X 1/8"
WIDTH (W) INCHES	LENGTH (L) INCHES	EXT.(+) INT.(–)	EXT.(+) INT.(–)
26–1/4	84	140.0	140.0
32–1/4		140.0	140.0
38–1/4		140.0	140.0
44–1/4		140.0	140.0
50–1/4		140.0	140.0
56–1/4		140.0	140.0
62–1/4		140.0	140.0
26–1/4	90	140.0	140.0
32–1/4		140.0	140.0
38–1/4		140.0	140.0
44–1/4		140.0	140.0
50–1/4		140.0	140.0
56–1/4		133.1	140.0
62–1/4		124.5	140.0
26–1/4	96	140.0	140.0
32–1/4		140.0	140.0
38–1/4		140.0	140.0
44–1/4		138.3	140.0
50–1/4		124.5	140.0
56–1/4		114.1	140.0
62–1/4		106.2	140.0
26–1/4	102	140.0	140.0
32–1/4		140.0	140.0
38–1/4		137.3	140.0
44–1/4		120.7	140.0
50–1/4		108.3	140.0
56–1/4		99.0	140.0
62–1/4		91.8	130.8
26–1/4	108	140.0	140.0
32–1/4		140.0	140.0
38–1/4		121.1	140.0
44–1/4		106.2	140.0
50–1/4		95.1	135.5
56–1/4		86.6	123.5
62–1/4		80.1	114.1
26–1/4	114	140.0	140.0
32–1/4		126.2	140.0
38–1/4		107.5	140.0
44–1/4		94.1	134.1
50–1/4		84.2	119.9
56–1/4		76.5	109.0
26–1/4	120	137.0	140.0
32–1/4		112.6	140.0
38–1/4		96.1	136.8
44–1/4		84.0	119.6
50–1/4		75.0	106.8
56–1/4		68.0	96.9

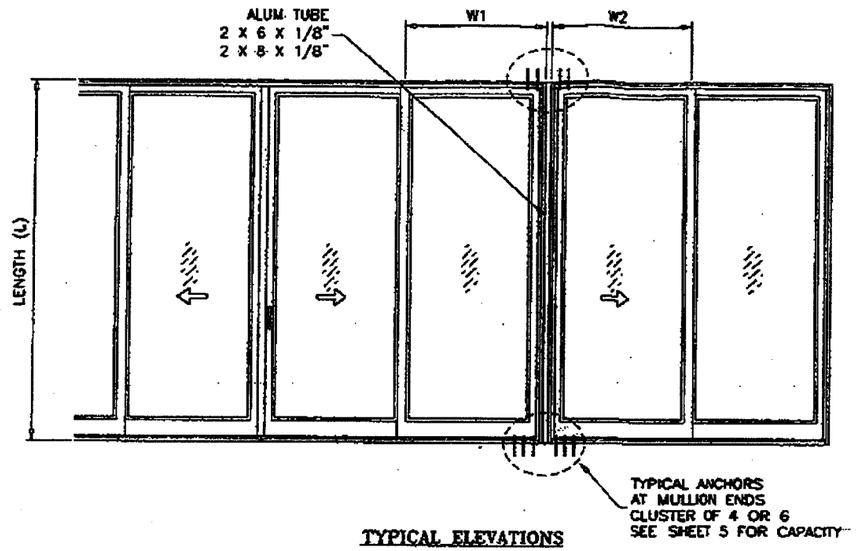

TYPICAL ELEVATIONS
SIDE BY SIDE S.G. DOOR
SIDE BY SIDE APPLIES TO TWO OR MORE DOORS

$$\text{WIDTH (W)} = \frac{W1 + W2}{2} + 2$$

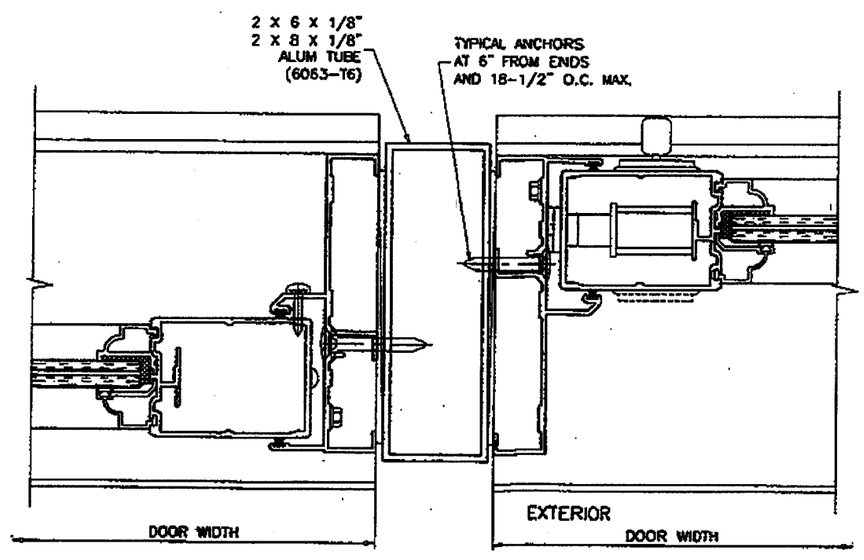

UNCLIPPED MULLION

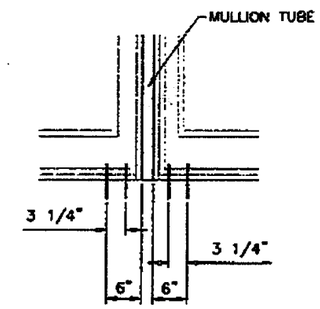

CLUSTER OF 4 ANCHORS

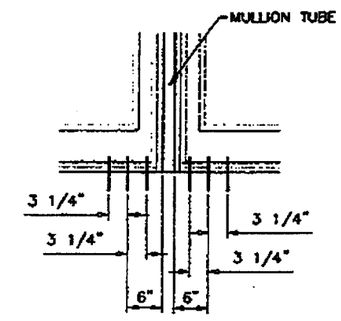

CLUSTER OF 6 ANCHORS

FOR THIS CASE READ VALUES FOR CLUSTER OF 5 ANCHORS ON SHEETS 5 & 6.

NOTES:

1. USE CHART ON THIS SHEET FOR SIDE BY SIDE CONNECTION CAPACITY OF DOOR MULLION.
2. FOR SLIDING GLASS DOOR CAPACITY SEE SHEET 3.
3. USE CHART ON SHEETS 5 & 6 TO SELECT ANCHOR ARRANGEMENT AT MULLION ENDS.
4. LOWER VALUES FROM STEPS 1, 2 OR 3 WILL APPLY TO ENTIRE SYSTEM.

Engr: ARSHAD VIQAR
CIVIL
FLA. PE # 38863
C.A.N. 3538

DEC 0 3 2009

PRODUCT REVISED
is complying with the Florida
Building Code
Acceptance No 09-1209.06
Expiration Date 06/12/2012
By
Miami Dade Product Control
Division

AL-FAROOQ CORPORATION
ENGINEERS & PRODUCT DEVELOPMENT
1238 S.W. 87 AVE
MIAMI, FLORIDA 33174
TEL. (305) 284-8100 FAX. (305) 262-6978
COMP–ANL\W08–14CGI

SERIES–560 ALUM SLIDING GLASS DOOR (L.M.I.)

CGI WINDOWS & DOORS
10100 N.W. 25TH STREET
MIAMI, FL. 33172
TEL. (305) 593-6590 FAX. (305) 593-6592

revisions:

no	date	by	description
A	04.18.08		REV. PER BCCO COMMENTS
B	05.16.08		REV. PER BCCO COMMENTS
C	11.06.09		NO CHANGE THIS SHEET

date: 02-08-08
scale: 3/8" = 1"
dr. by: HAMID
chk. by:

drawing no.
W08–14