MIAMI-DADE COUNTY
BUILDING CODE COMPLIANCE OFFICE (BCCO)
PRODUCT CONTROL DIVISION

MIAMI-DADE COUNTY, FLORIDA
METRO-DADE FLAGLER BUILDING

140 WEST FLAGLER STREET, SUITE 1603
MIAMI, FLORIDA 33130-1563
(305) 375-2901 FAX (305) 375-2908
www.miamidade.gov

NOTICE OF ACCEPTANCE (NOA)

Aluminum Technologies Corp.
2219 W 80th Street, Bay 5
Hialeah, Florida 33016

SCOPE:

This NOA is being issued under the applicable rules and regulations governing the use of construction materials. The documentation submitted has been reviewed by Miami-Dade County Product Control Division and accepted by the Board of Rules and Appeals (BORA) to be used in Miami Dade County and other areas where allowed by the Authority Having Jurisdiction (AHJ).

This NOA shall not be valid after the expiration date stated below. The Miami-Dade County Product Control Division (In Miami Dade County) and/or the AHJ (in areas other than Miami Dade County) reserve the right to have this product or material tested for quality assurance purposes. If this product or material fails to perform in the accepted manner, the manufacturer will incur the expense of such testing and the AHJ may immediately revoke, modify, or suspend the use of such product or material within their jurisdiction. BORA reserves the right to revoke this acceptance, if it is determined by Miami-Dade County Product Control Division that this product or material fails to meet the requirements of the applicable building code.

This product is approved as described herein, and has been designed to comply with the High Velocity Hurricane Zone of the Florida Building Code.

DESCRIPTION: " HPMA / Performance System 2 " Aluminum Accordion Shutter

APPROVAL DOCUMENT: Drawing No. 09-200, titled " Performance System 2 Accordion Shutter ", sheets 1 through 10 of 10, prepared by Tilteco, Inc., dated October 22, 2009, signed and sealed by Walter A. Tillit Jr., P.E., on October 23, 2009, bearing the Miami-Dade County Product Control Approval stamp with the Notice of Acceptance number and the approval date by the Miami-Dade County Product Control Division.

MISSILE IMPACT RATING: Large and Small Missile Impact

LABELING: Each unit shall bear a permanent label with the manufacturer's name or logo, city, state and the following statement: "Miami-Dade County Product Control Approved", unless otherwise noted herein.

RENEWAL of this NOA shall be considered after a renewal application has been filed and there has been no change in the applicable building code negatively affecting the performance of this product.

TERMINATION of this NOA will occur after the expiration date or if there has been a revision or change in the materials, use, and/or manufacture of the product or process. Misuse of this NOA as an endorsement of any product, for sales, advertising or any other purposes shall automatically terminate this NOA. Failure to comply with any section of this NOA shall be cause for termination and removal of NOA.

ADVERTISEMENT: The NOA number preceded by the words Miami-Dade County, Florida, and followed by the expiration date may be displayed in advertising literature. If any portion of the NOA is displayed, then it shall be done in its entirety.

INSPECTION: A copy of this entire NOA shall be provided to the user by the manufacturer or its distributors and shall be available for inspection at the job site at the request of the Building Official.

This consists of this page 1, evidence submitted page E-1 as well as approval document mentioned above.
The submitted documentation was reviewed by **Helmy A. Makar, P.E., M.S.**

MIAMI-DADE COUNTY APPROVED

Helmy A. Makar
02/17/2010

NOA No. 10-0105.01
Expiration Date: 02/17/2015
Approval Date: 02/17/2010

Aluminum Technologies Corp.

NOTICE OF ACCEPTANCE: EVIDENCE SUBMITTED

A. DRAWINGS

1. *Drawing No. 09-200, titled " Performance System 2 Accordion Shutter ", sheets 1 through 10 of 10, prepared by Tilteco, Inc., dated October 22, 2009, signed and sealed by Walter A. Tillit Jr., P.E., on October 23, 2009*

B. TESTS

1. *See Association's generic approval under 09-0645.*

C. CALCULATIONS

1. *See Association's generic approval under 09-0645.*

D. QUALITY ASSURANCE

1. *By Miami-Dade County Building Code Compliance Office.*

E. MATERIAL CERTIFICATIONS

1. *See Association's generic approval under 09-0645.*

F. STATEMENTS

1. *Release letter issued by the Hurricane Protection Manufacturers Association, dated October 20, 2009, certifying this product to meet the criteria of product tested and approved, and allowing Aluminum Technologies Corp. to use the test results approved under Miami Dade County Approval No. 09-0645, signed by Mr. Henry Revilla.*
2. *Acknowledgment letter by Aluminum Technologies Corp., dated October 20, 2009, signed by Nilvaldo Fiallo.*
3. *Letter by Tilteco Inc., dated October 23, 2009, signed and sealed by Mr. Walter A. Tillit, Jr., P.E., certifying that the drawing (No. 09-200) prepared for Aluminum Technologies Corp., is engineering wise identical to HPMA's generic drawing (No. 09-035).*

Helmy A. Makar, P.E., M.S.
Senior Product Control Examiner
NOA No. 10-0105.01
Expiration Date: 02/17/2015
Approval Date: 02/17/2010

GENERAL NOTES:

1. ACCORDION SHUTTER SHOWN ON THIS PRODUCT APPROVAL DOCUMENT HAS BEEN VERIFIED FOR CODE COMPLIANCE IN ACCORDANCE WITH THE 2007 EDITION OF THE FLORIDA BUILDING CODE.
DESIGN WIND LOADS SHALL BE DETERMINED AS PER SECTION 1620 OF THE ABOVE MENTIONED CODE. IN ORDER TO VERIFY THAT ANCHORS ON THIS P.A.D., AS TESTED, WERE NOT OVER STRESSED, A 33% INCREASE IN ALLOWABLE LOADS FOR WIND LOADS WAS **NOT** USED IN THEIR ANALYSIS. FASTENERS SPACING TO WOOD HAS BEEN DETERMINED IN ACCORDANCE WITH N.D.S. 2005.
ACCORDION SHUTTER'S ADEQUACY FOR IMPACT AND FATIGUE RESISTANCE HAS BEEN VERIFIED IN ACCORDANCE WITH SECTION 1626 OF THE ABOVE MENTIONED CODE PER TAS-201, TAS-202, AND TAS-203 PROTOCOLS AS PER CONSTRUCTION TESTING CORPORATION LABORATORY REPORTS N° 06-039, N° 08-001 AND 09-006.

2. THIS ACCORDION SHUTTER SYSTEM IS ENGINEERED TO WORK WITH EITHER SOLID BLADES G, G1 OR WITH G, G1 WORKING IN UNISON WITH PERFORATED BLADES G' OR G1' UNDER THE GENERAL LIMITATIONS AND CONDITIONS OF USE INDICATED ON SHEETS 6 AND 9; EXCEPT FOR A SPECIAL FLOOR TO CEILING CASE ENGINEERED FOR HIGHER PRESSURE RATING TO WORK WITH BLADES G2, G2A, DESCRIBED ON SHEET 8 OF 10.

3. STAINLESS STEEL SHEET METAL SCREWS USED AT LOUVER PIN SHALL BE # 14 x 3", 410-HT MINIMUM SERIES W/135.0 ksi YIELD STRENGTH & 180 ksi TENSILE STRENGTH. SCREWS SHALL BE COATED WITH XYLAN 5000 SERIES FLUOROPOLYMER COATINGS AS MANUFACTURED BY WHITFORD Co, BOX 507. WEST CHESTER PA. 19381.
4. ALL ALUMINUM EXTRUSIONS SHALL BE 6063-T6 ALLOY WITH MINIMUM YIELD STRENGTH OF Fy=31.0 ksi.

5. ALL SCREWS TO BE STAINLESS STEEL 304 OR 316 SERIES W/ 50 ksi YIELD STRENGTH AND 90 ksi TENSILE STRENGTH OR CORROSION RESISTANT COATED CARBON STEEL AS PER DIN 50018.

6. ALL ALUMINUM POP RIVETS TO BE 5052 ALUMINUM ALLOY WITH ALUMINUM MANDREL.

7. BOLTS TO BE GALVANIZED OR STAINLESS STEEL WITH 36 ksi MINIMUM MINIMUM YIELD STRENGTH.

8. ANCHORS TO WALL SHALL BE AS FOLLOWS: (UNLESS OTHERWISE NOTED)

(A) TO EXISTING POURED CONCRETE: Min. f'c PER SCHEDULE ON SHEET 9.
- 1/4" ø TAPCON OR 1/4"ø MAXI-SET TAPCON, AS MANUFACTURED BY I.T.W. BUILDEX.
- 1/4" ø CRETE FLEX SS4 ANCHORS, AS MANUFACTURED BY ELCO FASTENING SYSTEMS, LLC..
- 1/4" ø x 7/8" CALK-IN ANCHORS AS MANUFACTURED BY POWERS FASTENERS, INC.

NOTES:

A.1) MINIMUM EMBEDMENT OF TAPCON ANCHORS AND CRETE FLEX SS4 ANCHORS INTO CONCRETE IS 1 3/4".

A.2) 7/8" CALK-IN ANCHORS SHALL BE ENTIRELY EMBEDDED INTO THE POURED CONCRETE. NO EMBEDMENT INTO STUCCO SHALL BE PERMITTED. 1/4" ø-20 S.S SCREWS USED SHALL BE 1 1/2" LONG MINIMUM SHOULD STUCCO EXIST.

A.3) IN CASE THAT PRECAST STONE, PRECAST CONCRETE PANELS, OR PAVERS BE FOUND ON THE EXISTING WALL FLOOR, ANCHORS SHALL BE LONG ENOUGH TO REACH THE MAIN STRUCTURE BEHIND SUCH PANELS. ANCHORAGE SHALL BE AS INDICATED ON NOTES A.1 & A.2 ABOVE.

(B) TO EXISTING CONCRETE BLOCK WALL: ASTM C-90 BLOCK
- 1/4" ø TAPCON OR 1/4"ø MAXI-SET TAPCON, AS MANUFACTURED BY I.T.W. BUILDEX.
- 1/4" ø CRETE FLEX SS4 ANCHORS, AS MANUFACTURED BY ELCO FASTENING SYSTEMS, LLC.
- 1/4" ø x 7/8" CALK-IN ANCHORS AS MANUFACTURED BY POWERS FASTENERS, INC.

NOTES:

B.1) MINIMUM EMBEDMENT OF TAPCON ANCHORS, AND CRETE FLEX SS4 ANCHORS INTO THE CONCRETE BLOCK UNIT SHALL BE 1 1/4".

B.2) 7/8" CALK-IN ANCHORS SHALL BE ENTIRELY EMBEDDED INTO THE CONCRETE BLOCK UNIT. NO EMBEDMENT INTO STUCCO SHALL BE PERMITTED. 1/4" ø-20 S.S SCREWS USED SHALL BE 1 1/2" LONG MINIMUM SHOULD STUCCO EXIST AND 1" MINIMUM FOR WALLS WITH NO STUCCO.

B.3) IN CASE THAT PRECAST STONE OR PRECAST CONCRETE PANELS BE FOUND ON THE EXISTING WALL, ANCHORS SHALL BE LONG ENOUGH TO REACH THE MAIN STRUCTURE BEHIND SUCH PANELS. ANCHORAGE SHALL BE AS INDICATED ON NOTES B.1 & B.2 ABOVE.

(C) ANCHORS SHALL BE INSTALLED FOLLOWING ALL OF THE RECOMMENDATIONS AND SPECIFICATIONS OF THE ANCHOR'S MANUFACTURER.

9. SHUTTER'S COMPONENTS ARE PATENT PENDING.

10. IT SHALL BE THE RESPONSIBILITY OF THE CONTRACTOR TO VERIFY THE SOUNDNESS OF THE STRUCTURE WHERE SHUTTER IS TO BE ATTACHED TO INSURE PROPER ANCHORAGE. THIS SHUTTER SHALL ONLY BE ATTACHED TO CONCRETE, BLOCK OR WOOD FRAME BUILDINGS.

11. A PERMANENT SHUTTER MANUFACTURER'S LABEL SHALL BE PLACED ON THE EXPOSED SURFACE OF THE FEMALE CENTERMATE BLADE (COMPONENT H).
ONE LABEL SHALL BE PLACED FOR EVERY OPENING. LABEL SHALL READ AS FOLLOWS:
"PERFORMANCE SYSTEM 2 ACCORDION SHUTTER"
ALUMINUM TECHNOLOGIES CORP.
HIALEAH, FLORIDA
MIAMI-DADE COUNTY PRODUCT CONTROL APPROVED.

12. (a) THIS PRODUCT APPROVAL DOCUMENT (P.A.D.) PREPARED BY THIS ENGINEER IS GENERIC AND DOES NOT PROVIDE INFORMATION FOR A SITE SPECIFIC PROJECT; i.e. WHERE THE SITE CONDITIONS DEVIATE FROM THE P.A.D.

(b) CONTRACTOR TO BE RESPONSIBLE FOR THE SELECTION, PURCHASE AND INSTALLATION INCLUDING LIFE SAFETY OF THIS PRODUCT BASED ON THIS PRODUCT APPROVAL PROVIDED HE/SHE DOES NOT DEVIATE FROM THE CONDITIONS DETAILED ON THIS DOCUMENT. CONSTRUCTION SAFETY AT SITE IS THE CONTRACTOR'S RESPONSIBILITY.

(c) THIS PRODUCT APPROVAL DOCUMENT WILL BE CONSIDERED INVALID IF MODIFIED.

(d) SITE SPECIFIC PROJECTS SHALL BE PREPARED BY A FLORIDA REGISTERED ENGINEER OR ARCHITECT WHICH WILL BECOME THE ENGINEER OF RECORD (E.O.R.) FOR THE PROJECT AND WHO WILL BE RESPONSIBLE FOR THE PROPER USE OF THE P.A.D. ENGINEER OF RECORD, ACTING AS DELEGATED ENGINEER TO THE P.A.D. ENGINEER, SHALL SUBMIT TO THIS LATTER THE SITE SPECIFIC DRAWINGS FOR REVIEW.

(e) THIS P.A.D. SHALL BEAR THE DATE AND ORIGINAL SEAL AND SIGNATURE OF THE PROFESSIONAL ENGINEER THAT PREPARED IT.

FLORIDA BUILDING CODE (High Velocity Hurricane Zone)

Approved as complying with the Florida Building Code
Date 02/17/2010
NOA# 10-0105.01
Miami Dade Product Control Division
By

MIAMI-DADE COUNTY

10/23/09
P.E. SEAL/SIGNATURE/DATE

© 2009 HURRICANE PROTECTION MANUFACTURERS ASSOCIATION

TILTECO INC.
TILLIT TESTING & ENGINEERING COMPANY
6355 N.W. 36th. St., Ste. 305, VIRGINIA GARDENS, Fl. 33166
Phone : (305)871-1530 . Fax : (305)871-1531
tilteco@aol.com
EB-0006719
WALTER A. TILLIT Jr. P.E.
FLORIDA Lic. # 44167

PERFORMANCE SYSTEM 2 ACCORDION SHUTTER

ALUMINUM TECHNOLOGIES CORP.
2219 WEST 80th STREET. BAY #5
HIALEAH, FLORIDA 33016
PH: (305) 362-1405 FAX: (305) 362-2024
PH: (1877) 369-4000

REV. No	DESCRIPTION	DATE	REV. No	DESCRIPTION	DATE
1	-	-	3	-	-
2	-	-	4	-	-

DRAWN BY:	I.A.
DATE	10/22/09
DRAWING No	09-200
SHEET	1 OF 10

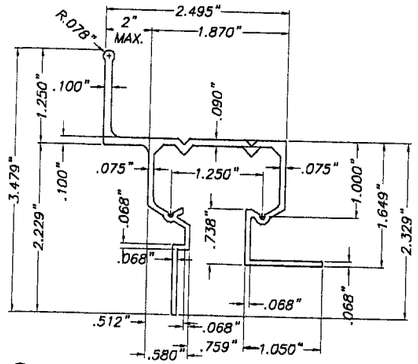

Ⓐ WALL HEADER (& INVERTED)

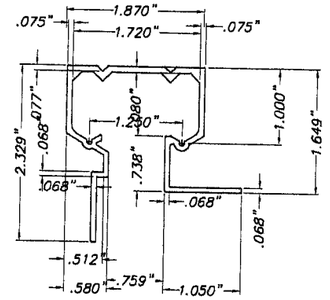

Ⓑ CEILING HEADER

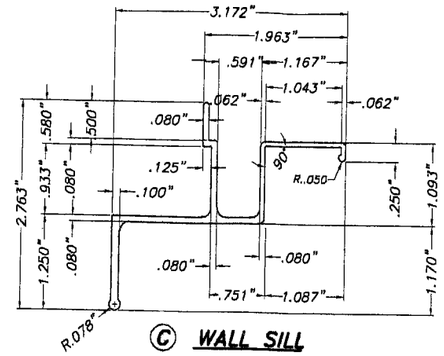

Ⓒ WALL SILL

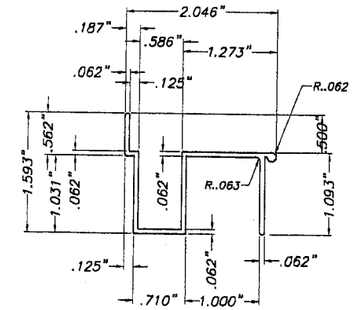

Ⓓ FLOOR SILL

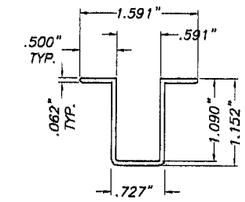

Ⓓ1 FLOOR SILL

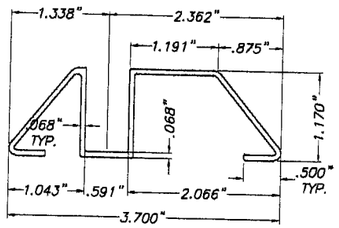

Ⓓ2 THRESHOLD TRACK

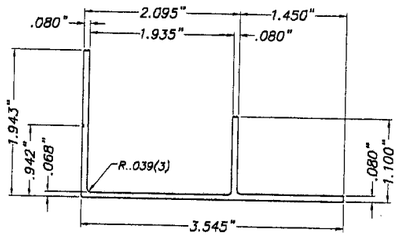

Ⓔ ADJUSTABLE SILL ADAPTOR

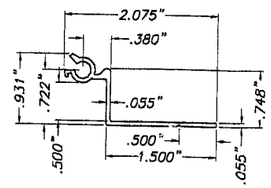

Ⓕ 90° STARTER

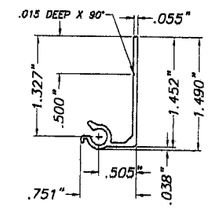

Ⓕ1 180° MALE STARTER

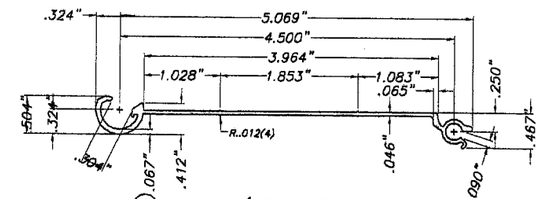

Ⓖ MALE/FEMALE SOLID BLADE

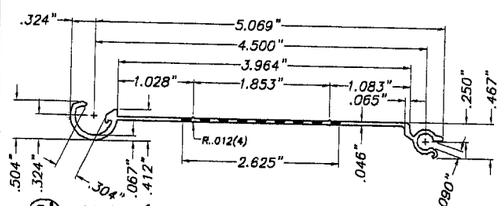

Ⓖ' MALE/FEMALE PERFORATED BLADE ♦

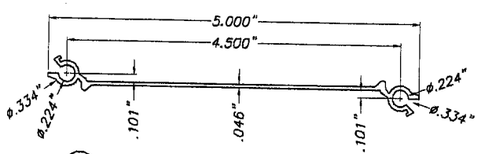

Ⓖ1 MALE/MALE SOLID BLADE

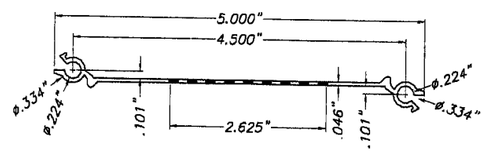

Ⓖ1' MALE/MALE PERFORATED BLADE ♦

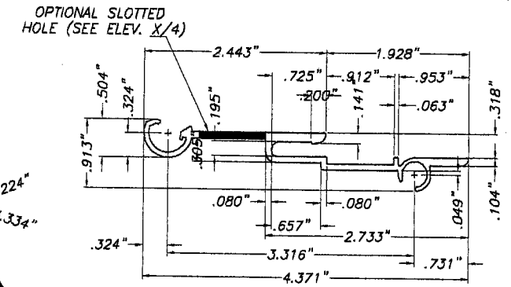

Ⓗ FEMALE CENTERMATE BLADE

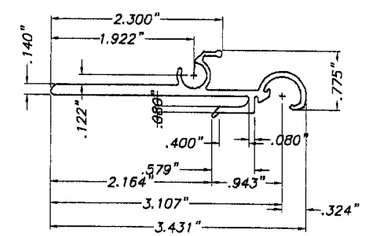

Ⓗ1 MALE CENTERMATE BLADE

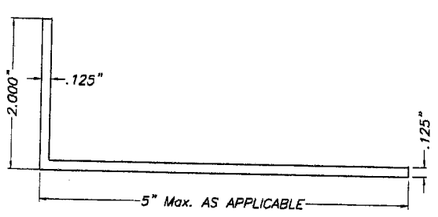

Ⓘ ALUMINUM ANGLE

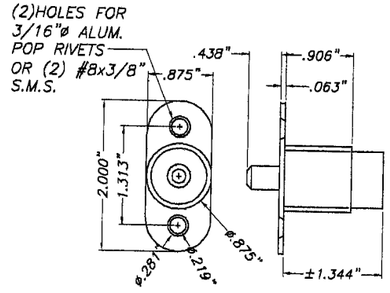

Ⓙ BRASS NICKEL PLATED OR S.S. PUSH BUTTON LOCK

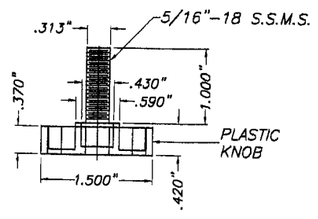

Ⓙ1 5/16"øx1" S.S.M.S. W/PLASTIC KNOB LOCK

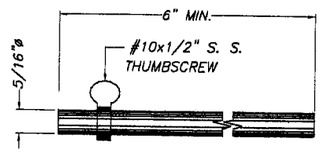

Ⓚ LOCKING PIN (OPTIONAL)

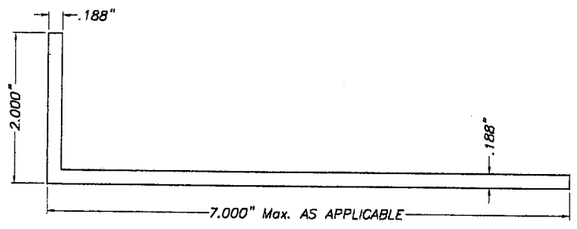

Ⓘ1 ALUMINUM ANGLE

FLORIDA BUILDING CODE (High Velocity Hurricane Zone)

♦ SEE LIMITATIONS OF USE FOR BLADES Ⓖ' AND Ⓖ1' ON SHEET 6.

COMPONENTS FOR P.S. 2 SYSTEM

(SEE SPECIAL ADDITIONAL COMPONENTS FOR FLOOR/CEILING INSTALLATION CASE ON SHEET 8 OF 10)

SCALE: 1/2" = 1"

Approved as complying with the Florida Building Code
Date 02/17/2010
NOA# 10-0105.01
Miami Dade Product Control Division
By [signature]

MIAMI-DADE COUNTY

10/23/09

P.E. SEAL/SIGNATURE/DATE

© 2009 HURRICANE PROTECTION MANUFACTURERS ASSOCIATION

TILTECO INC.
TILLIT TESTING & ENGINEERING COMPANY
6355 N.W. 36th. St. Ste. 305, VIRGINIA GARDENS, Fl. 33166
Phone : (305)871-1530 . Fax : (305)871-1531
tilteco@aol.com
EB-0006719
WALTER A. TILLIT Jr. P.E.
FLORIDA Lic. # 44167

PERFORMANCE SYSTEM 2 ACCORDION SHUTTER

ALUMINUM TECHNOLOGIES CORP.
2219 WEST 80th STREET, BAY #5
HIALEAH, FLORIDA 33016
PH: (305) 362-1405 FAX: (305) 362-2024
PH: (1877) 369-4000

REV. No	DESCRIPTION	DATE	REV. No	DESCRIPTION	DATE
1	–	–	3	–	–
2	–	–	4	–	–

DRAWN BY: I.A.
10/22/09 DATE
09-200 DRAWING No
SHEET 2 OF 10

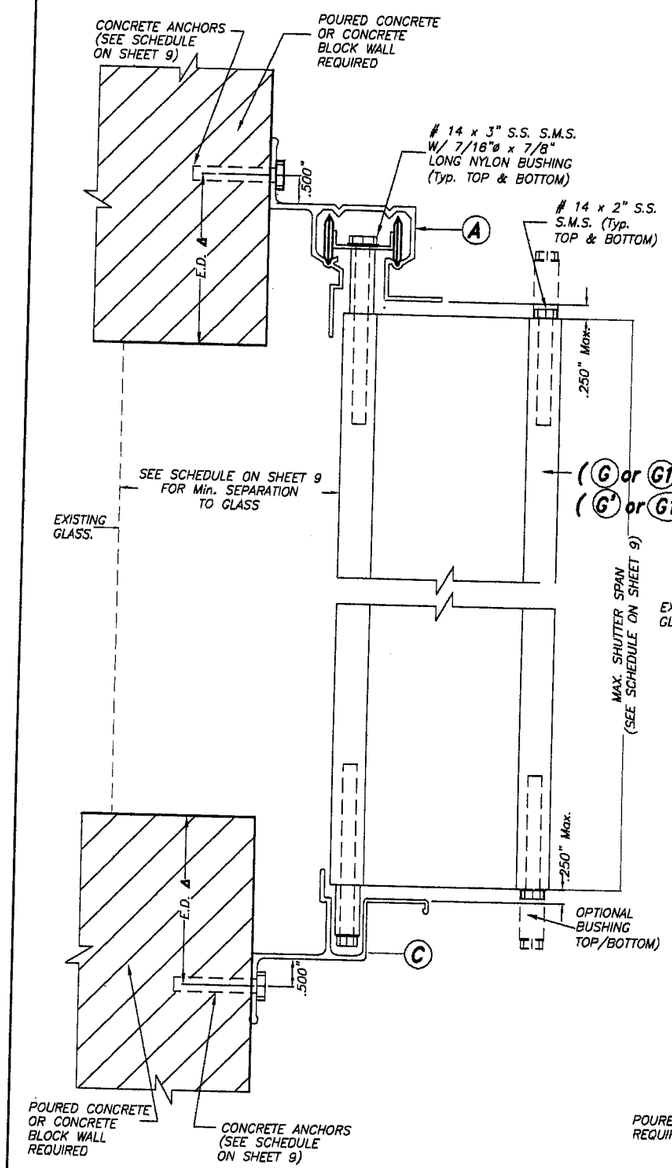

WALL MOUNTING INSTALLATION SECTION A

SCALE : 3/8" = 1"

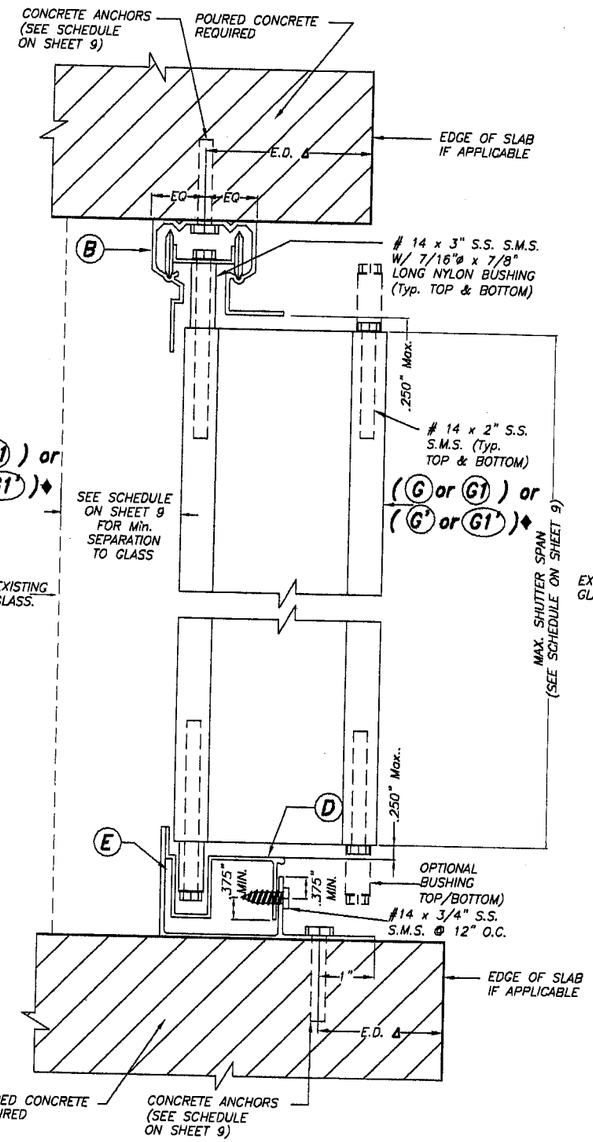

CEILING & FLOOR MOUNTING INSTALLATION SECTION B

SCALE : 3/8" = 1"

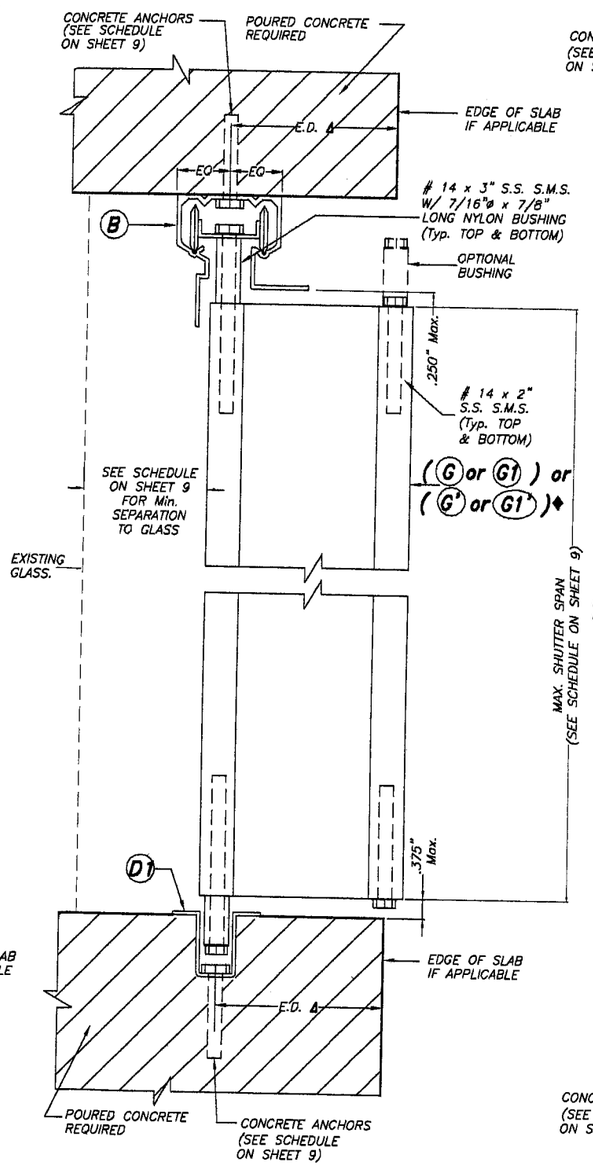

CEILING & FLOOR MOUNTING INSTALLATION SECTION B1

SCALE : 3/8" = 1"

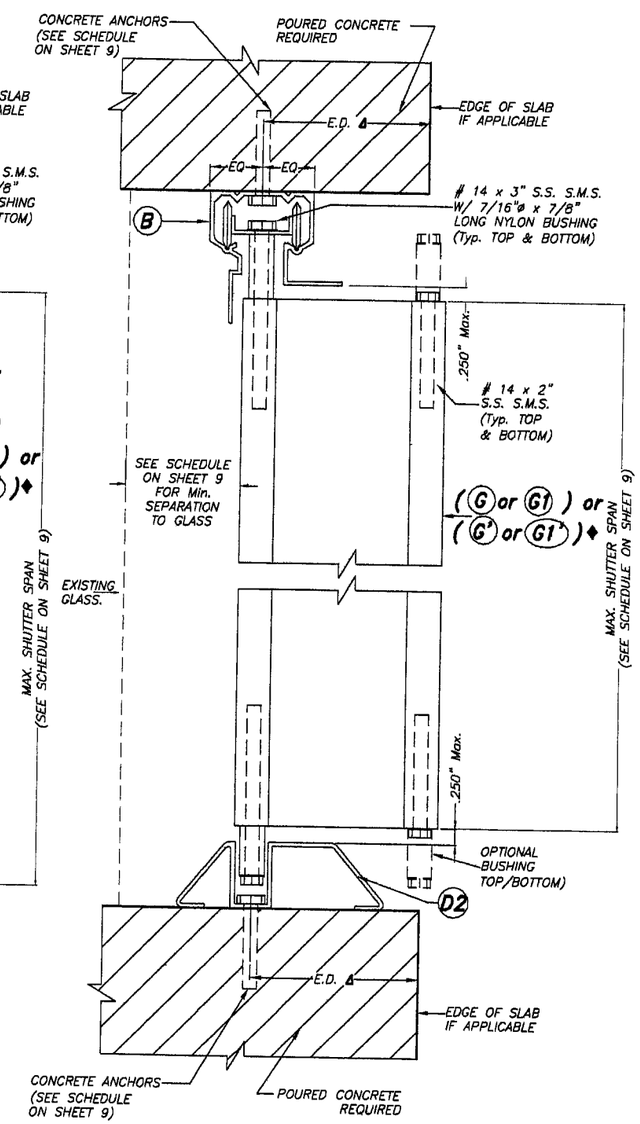

CEILING & FLOOR MOUNTING INSTALLATION SECTION B2

SCALE : 3/8" = 1"

Δ E.D. = EDGE DISTANCE, SEE SCHEDULE ON SHEET 9

NOTE :
WALL/FLOOR/CEILING MOUNTING SECTIONS CAN BE COMBINED IN ANY WAY TO SUIT ANY INSTALLATION.

♦ SEE LIMITATIONS OF USE FOR BLADES (G) AND (G1) ON SHEET 6.

FLORIDA BUILDING CODE (High Velocity Hurricane Zone)

Approved as complying with the Florida Building Code
Date 02/17/2010
NOA# 10-0105.01
Miami Dade Product Control Division
By Helen A. Walker
MIAMI-DADE COUNTY

10/23/09
P.E. SEAL/SIGNATURE/DATE

© 2009 HURRICANE PROTECTION MANUFACTURERS ASSOCIATION

TILTECO INC.
TILLIT TESTING & ENGINEERING COMPANY
6355 N.W. 36th. St., Ste. 305, VIRGINIA GARDENS, FL 33166
Phone : (305)871-1530 , Fax : (305)871-1531
tilteco@aol.com
EB-0006719
WALTER A. TILLIT Jr. P.E.
FLORIDA Lic. # 44167

PERFORMANCE SYSTEM 2 ACCORDION SHUTTER

ALUMINUM TECHNOLOGIES CORP.
2219 WEST 80th STREET, BAY #5
HIALEAH, FLORIDA 33016
PH: (305) 362-1405 FAX: (305) 362-2024
PH: (1877) 369-4000

REV. No	DESCRIPTION	DATE	REV. No	DESCRIPTION	DATE
1	–	–	3	–	–
2	–	–	4	–	–

DRAWN BY: I.A.
DATE: 10/22/09
DRAWING No: 09-200
SHEET 3 OF 10

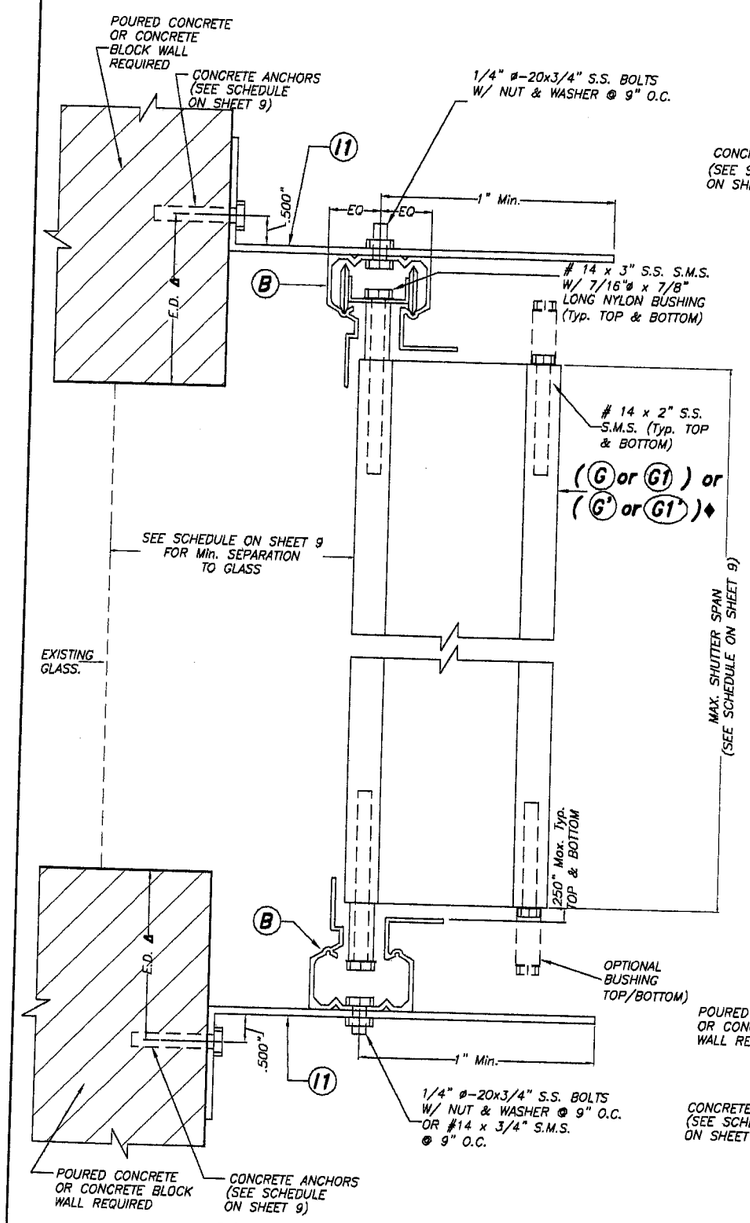

BUILD-OUT INSTALLATION - SECTION C

SCALE : 3/8" = 1"

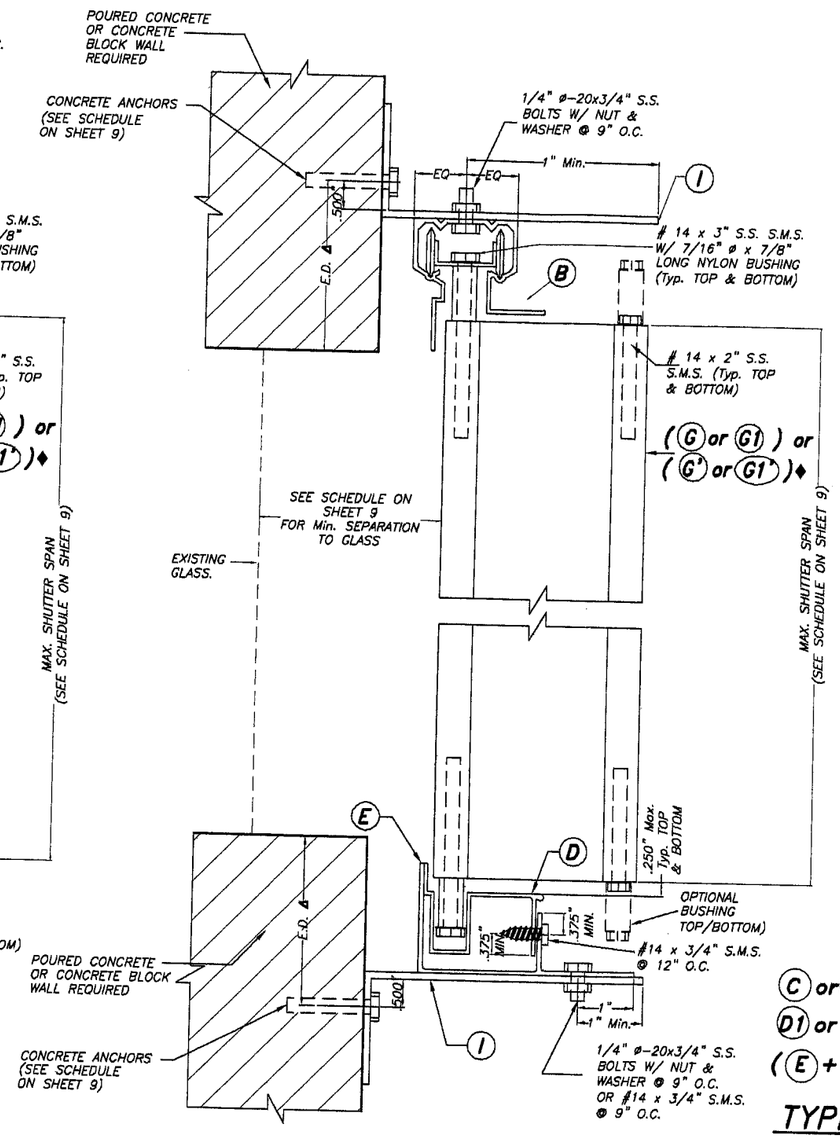

BUILD-OUT INSTALLATION - SECTION C1

SCALE : 3/8" = 1"

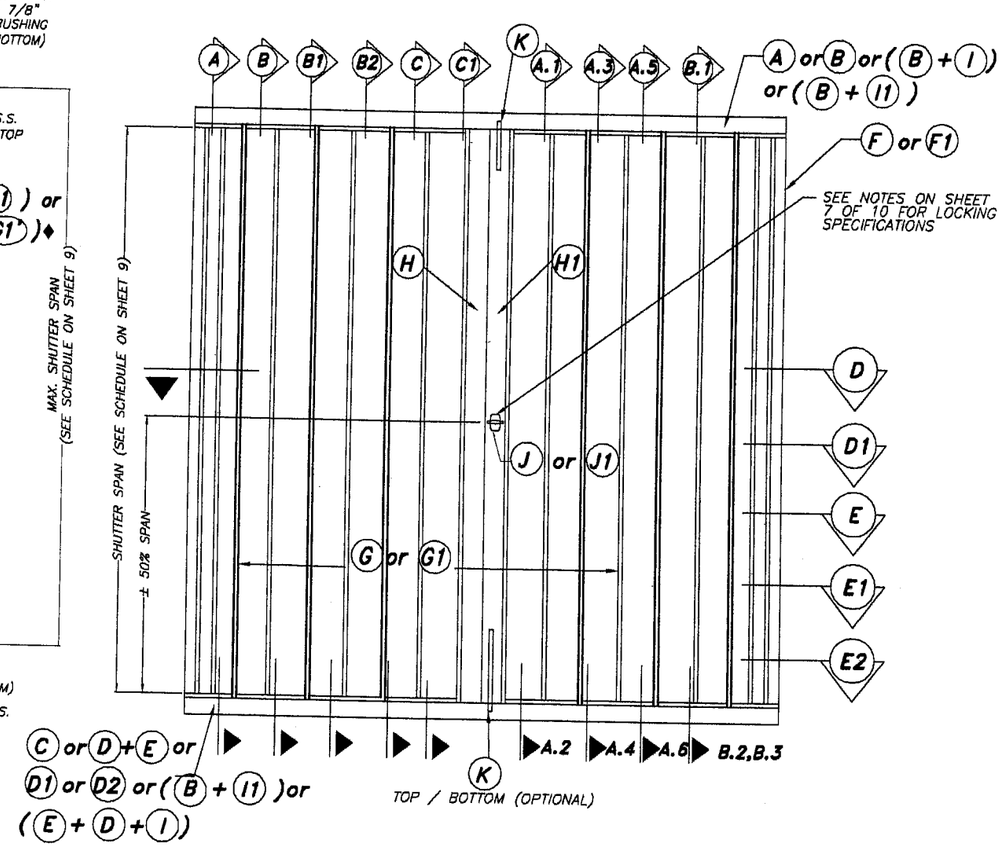

TYPICAL SHUTTER ELEVATION ONLY W/ G OR G1 BLADES

(SEE SHEET 6 FOR TYP. SHUTTER ELEVATION W/ G & G1 BLADES WORKING IN UNISON W/ G AND G1)

N. T. S.

Δ E.D. = EDGE DISTANCE, SEE SCHEDULE ON SHEET 9

NOTE :

WALL MOUNTING SECTIONS CAN BE COMBINED IN ANY WAY TO SUIT ANY INSTALLATION.

♦ SEE LIMITATIONS OF USE FOR BLADES G AND G1 ON SHEET 6.

FLORIDA BUILDING CODE (High Velocity Hurricane Zone)

Approved as complying with the Florida Building Code
Date 02/17/2010
NOA# 10-0105.01
Miami Dade Product Control Division
By
MIAMI-DADE COUNTY

10/23/09
P.E. SEAL/SIGNATURE/DATE

© 2009 HURRICANE PROTECTION MANUFACTURERS ASSOCIATION

TILLECO INC.
TILLIT TESTING & ENGINEERING COMPANY
6355 N.W. 36th. St., Ste. 305, VIRGINIA GARDENS, Fl. 33166
Phone : (305)871-1530 . Fax : (305)871-1531
tilteco@aol.com
EB-0006719
WALTER A. TILLIT Jr. P.E.
FLORIDA Lic. # 44167

PERFORMANCE SYSTEM 2 ACCORDION SHUTTER

ALUMINUM TECHNOLOGIES CORP.
2219 WEST 80th STREET. BAY #5
HIALEAH, FLORIDA 33016
PH: (305) 362-1405 FAX: (305) 362-2024
PH: (1877) 369-4000

REV. No	DESCRIPTION	DATE	REV. No	DESCRIPTION	DATE
1	–	–	3	–	–
2	–	–	4	–	–

DRAWN BY: I.A.

10/22/09 DATE

09-200 DRAWING No

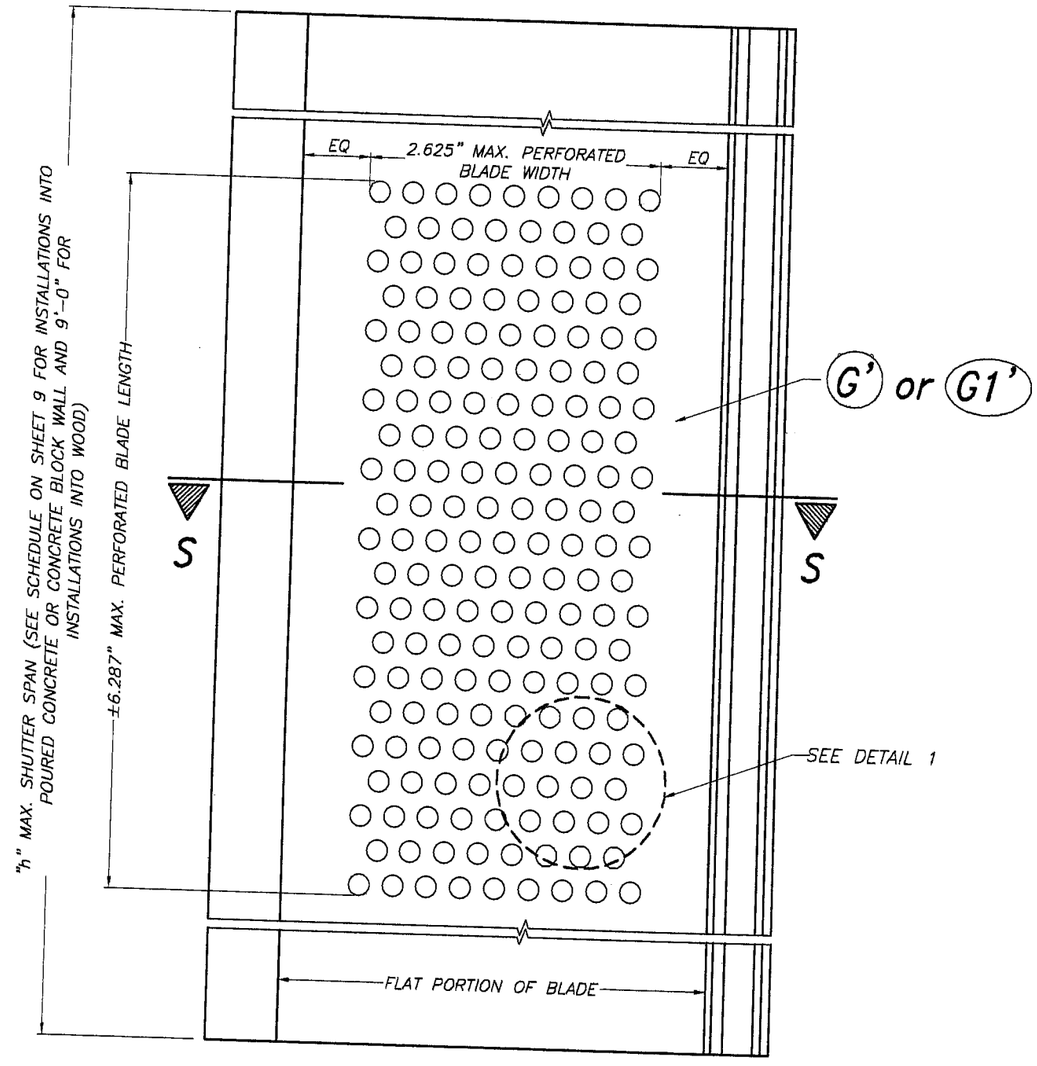

TYPICAL G' OR G1' PERFORATED BLADE ELEVATION

SCALE: 1/2"=1"

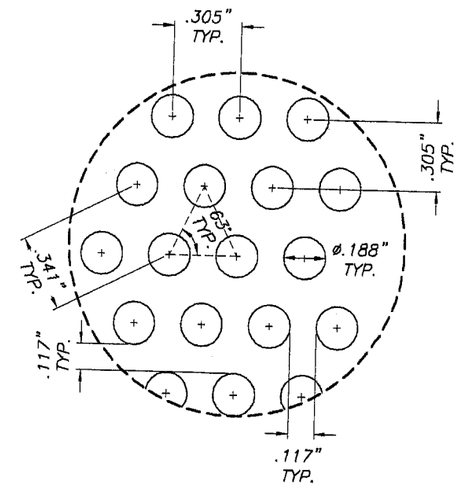

DETAIL 1

N.T.S.

SECTION S-S THRU G' MALE/FEMALE BLADE

SECTION S-S THRU G1' MALE/MALE BLADE

FLORIDA BUILDING CODE (High Velocity Hurricane Zone)

Approved as complying with the Florida Building Code
Date 02/17/2010
NOA# 10-0105.01
Miami Dade Product Control Division
By _____
MIAMI-DADE COUNTY

10/23/09
P.E. SEAL/SIGNATURE/DATE

© 2009 HURRICANE PROTECTION MANUFACTURERS ASSOCIATION

TILTECO INC.
TILLIT TESTING & ENGINEERING COMPANY
6355 N.W. 36th. St., Ste. 305, VIRGINIA GARDENS, Fl. 33166
Phone : (305)871-1530 . Fax : (305)871-1531
tilteco@aol.com
EB-0006719
WALTER A. TILLIT Jr. P.E.
FLORIDA Lic. # 44167

PERFORMANCE SYSTEM 2 ACCORDION SHUTTER

ALUMINUM TECHNOLOGIES CORP.
2219 WEST 80th STREET, BAY #5
HIALEAH, FLORIDA 33016
PH: (305) 362-1405 FAX: (305) 362-2024
PH: (1877) 369-4000

REV. No	DESCRIPTION	DATE	REV. No	DESCRIPTION	DATE
1	–	–	3	–	–
2	–	–	4	–	–

DRAWN BY: I.A.
10/22/09 DATE
09-200 DRAWING No
SHEET 5 OF 10

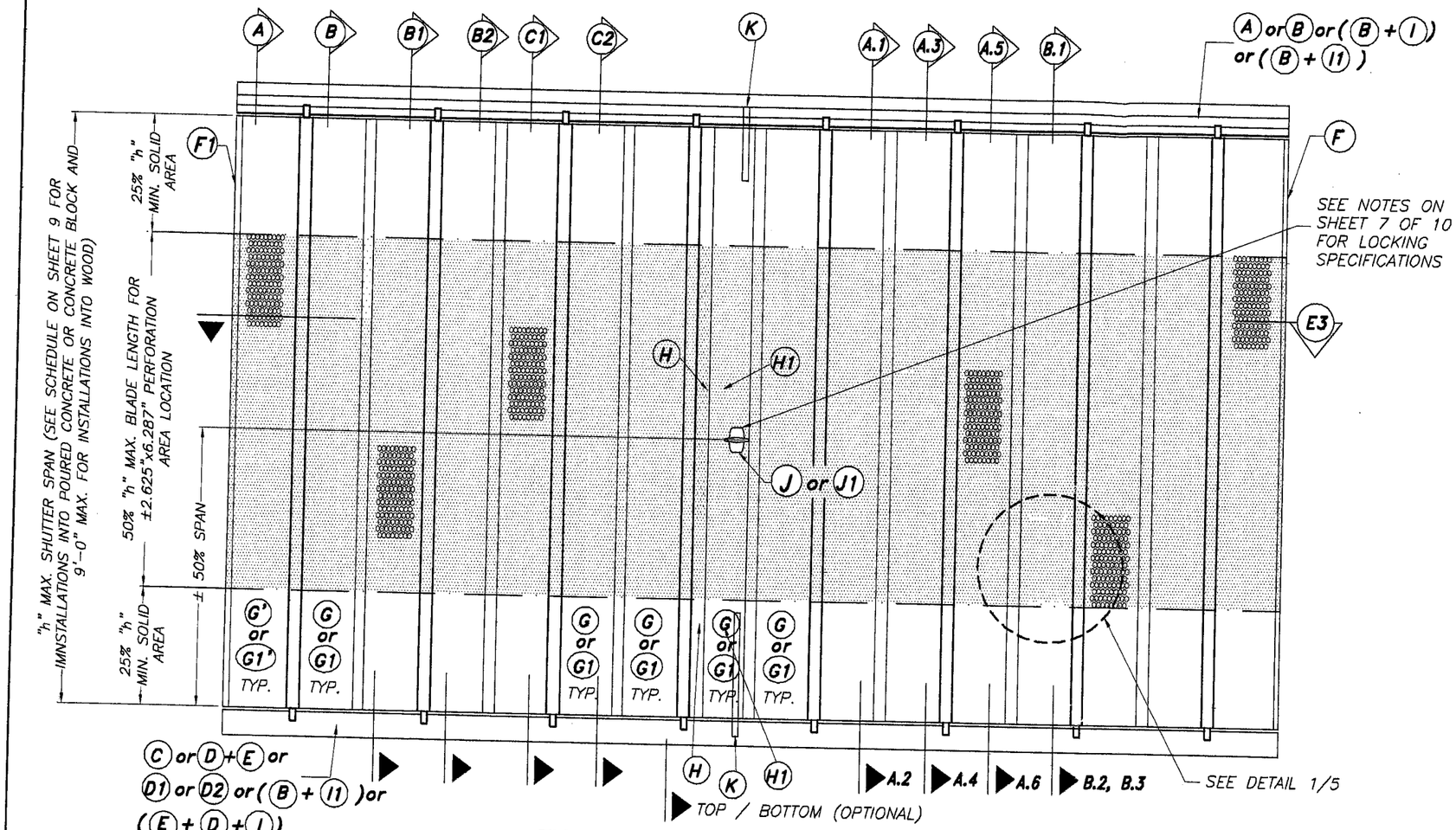

TYPICAL SHUTTER ELEVATION

N. T. S.

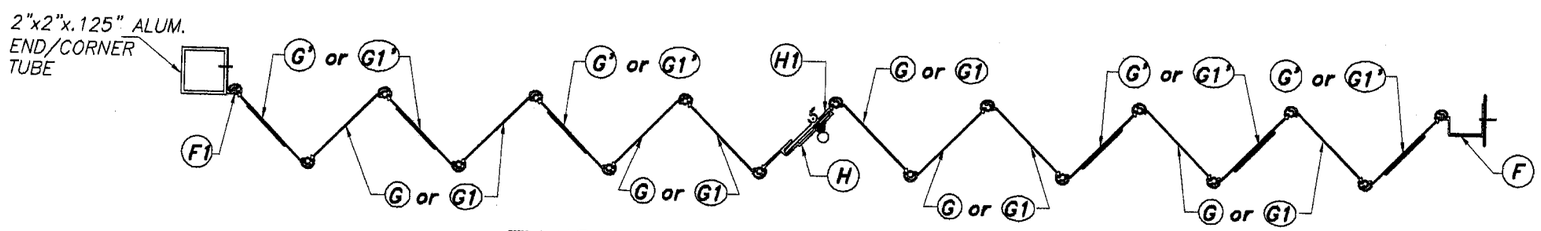

TYPICAL SHUTTER PLAN (SECTION E3-E3)

TYPICAL SHUTTER W/ G OR G1 BLADES WORKING IN UNISON WITH G' OR G1' BLADES

N. T. S.

*** GENERAL LIMITATIONS AND CONDITIONS OF USE FOR G OR G1 BLADE ACCORDION SHUTTER SYSTEM WORKING IN UNISON WITH G' OR G1' BLADES.**

1. MAXIMUM SHUTTER SPAN AND PRESSURE RATING, MAXIMUM ANCHOR SPACING AND MINIMUM SEPARATION TO GLASS FOR G' AND G1' WORKING IN UNISON WITH G AND G1 ARE AS PER SCHEDULES ON SHEET 9.
2. MAXIMUM PERFORATION AREA AT G', G1' IS ± 2.625"x 6.28" AND MUST BE LOCATED WITHIN THE CENTRAL 50% OF THE BLADE SPAN. SEE SHEET 5 FOR PERFORATED BLADES G', G1' SPECIFICATIONS.
   PERFORATED BLADES G', G1' MUST BE SOLID AT THE TOP AND BOTTOM 25% OF BLADE'S SPAN.
3. PERFORATED BLADES G', G1' SHALL BE INSTALLED AT EVERY OTHER BLADE (FREQUENCY).
4. CENTERMATES H, H1 MUST ALWAYS BE ACCOMPANIED BY TWO SOLID BLADES G, G1 AT EITHER SIDE OF EACH CENTERMATE.
5. STARTERS AND CENTERMATES MUST BE ALWAYS SOLID.
6. STARTERS CONNECTION TO EXISTING BUILDING OR TO END/CORNER TUBES MUST BE AS PER DETAILS INDICATED ON SHEET 7.

FLORIDA BUILDING CODE (High Velocity Hurricane Zone)

Approved as complying with the Florida Building Code
Date 02/17/2010
NOA# 10-0105.01
Miami Dade Product Control Division
By Helena A. Melo
MIAMI-DADE COUNTY

10/23/09
P.E. SEAL/SIGNATURE/DATE

© 2009 HURRICANE PROTECTION MANUFACTURERS ASSOCIATION

TILTECO INC.
TILLIT TESTING & ENGINEERING COMPANY
6355 N.W. 36th. St., Ste. 305, VIRGINIA GARDENS, Fl. 33166
Phone : (305)871-1530 . Fax : (305)871-1531
tilteco@aol.com
EB-0006719
WALTER A. TILLIT Jr. P.E.
FLORIDA Lic. # 44167

PERFORMANCE SYSTEM 2 ACCORDION SHUTTER

ALUMINUM TECHNOLOGIES CORP.
2219 WEST 80th STREET. BAY #5
HIALEAH, FLORIDA 33016
PH: (305) 362-1405 FAX: (305) 362-2024
PH: (1877) 369-4000

REV. No	DESCRIPTION	DATE	REV. No	DESCRIPTION	DATE
1	–	–	3	–	–
2	–	–	4	–	–

DRAWN BY:	I.A.
DATE	10/22/09
DRAWING No	09-200
SHEET	6 OF 10

INSTALLATIONS WITH BLADES (G) OR (G1) ONLY

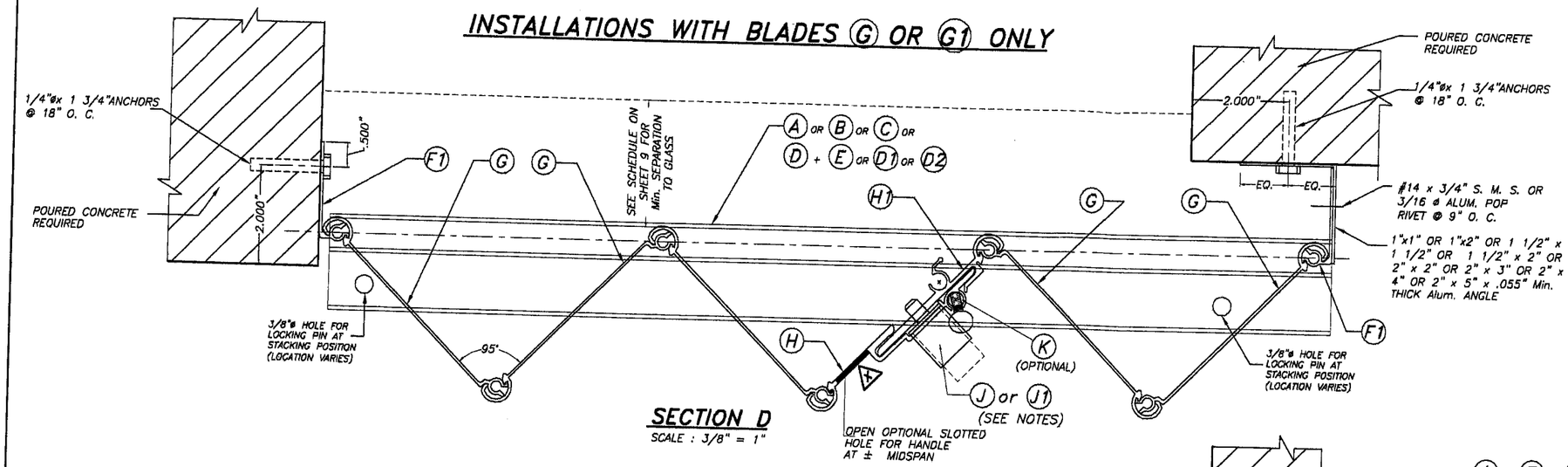

SECTION D

SCALE : 3/8" = 1"

NOTES FOR LOCKING OF (H) & (H1)

1–PUSH BOTTOM LOCK (J) MAY BE USED FOR INSTALLATIONS SECURED FROM THE OUTSIDE OR INSIDE OF SHUTTER. WHEN INSTALLING (J) FROM THE OUTSIDE, A 7/8"ø MAX. HOLE MAY BE DRILLED AT (H) AND (J) MUST BE RIVETED FROM THE BACK OF (H) TO THE FRONT W/ (2)3/16"ø ALUM. POP RIVETS OR (2)#8x3/8" S.M.S. A 3/8"ø HOLE MUST THEN BE DRILLED AT (H1) TO ALLOW FOR (J)'S PIN TO PASS THRU. WHEN INSTALLING (J) FROM THE INSIDE, (J) MUST BE RIVETED TO (H1) W/(2)3/16"ø ALUM. POP RIVETS OR (2)#8x3/8" S.M.S. A 3/8"ø HOLE MUST THEN BE DRILLED THRU (H) AND (H1) TO ALLOW FOR (J)'S PIN TO PASS THRU.

2–5/16"x1" LOCK (J1) MAY BE USED ALTERNATIVELLY TO (J) LOCK FOR INSTALLATIONS SECURED FROM THE OUTSIDE OR INSIDE OF SHUTTER. IN THIS CASE, A 5/16"ø HOLE SHALL BE DRILLED THRU (H) AND (H1). HOLE DRILLED TO (H1) SHALL BE TAPPED TO ACCEPT 18 THREADS PER INCH MACHINE SCREW.

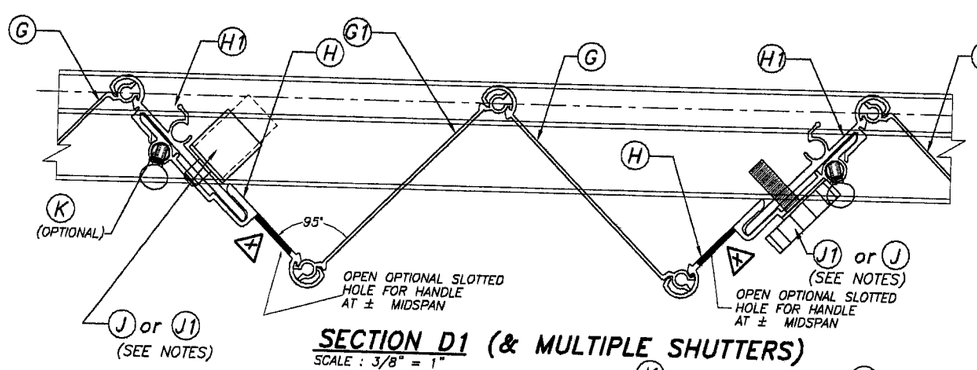

SECTION D1 (& MULTIPLE SHUTTERS)

SCALE : 3/8" = 1"

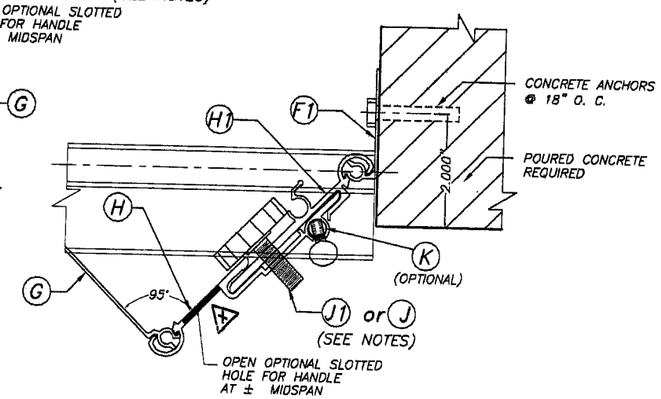

ONE SIDED SECTION : END CONNECTION DETAIL

SCALE : 3/8" = 1"

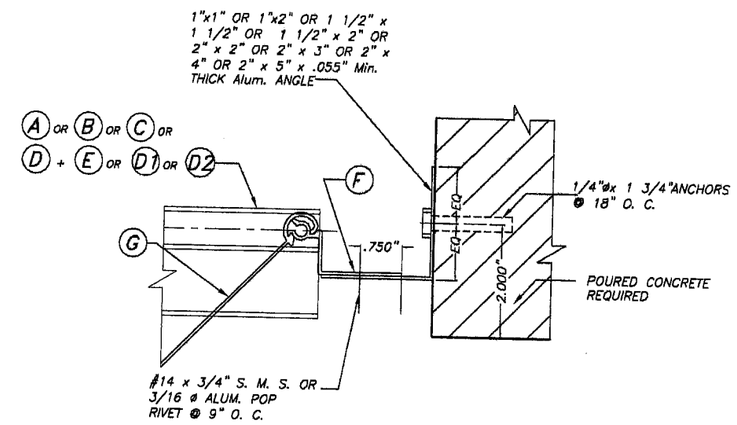

ALTERNATE CLOSURE DETAIL W / (F)

SCALE : 3/8" = 1"

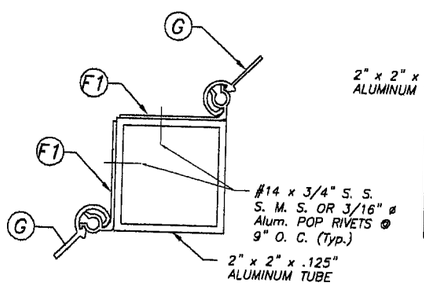

SECTION E

SCALE : 3/8" = 1"

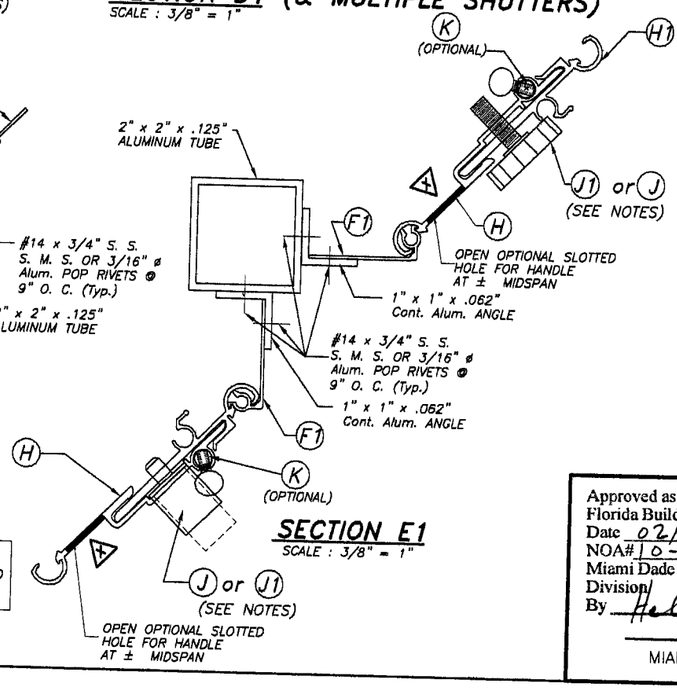

SECTION E1

SCALE : 3/8" = 1"

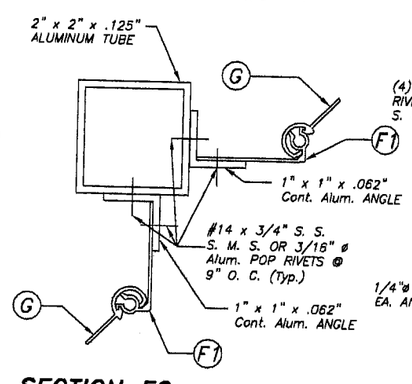

SECTION E2

SCALE : 3/8" = 1"

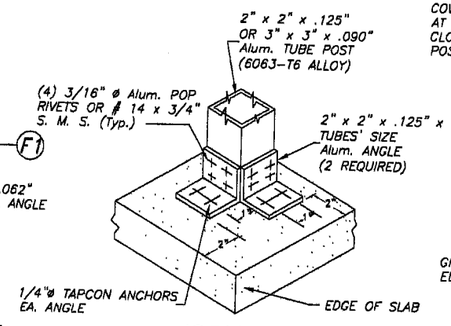

ISOMETRIC (CORNER POST)

(Typ. AT TOP & BOTTOM SLABS)

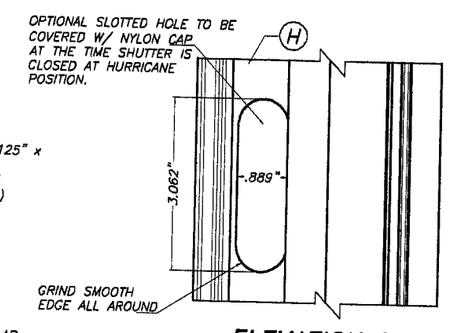

ELEVATION X

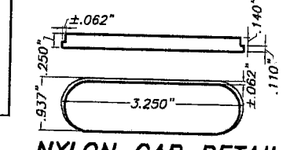

NYLON CAP DETAIL

SCALE : 3/8" = 1"

NOTE :

SECTIONS SHOWN CAN BE COMBINED TO SUIT ANY INSTALLATION.

FLORIDA BUILDING CODE (High Velocity Hurricane Zone)

Approved as complying with the Florida Building Code
Date 02/17/2010
NOA# 10-0105.01
Miami Dade Product Control Division
By
MIAMI–DADE COUNTY

10/23/09
P.E. SEAL/SIGNATURE/DATE

© 2009 HURRICANE PROTECTION MANUFACTURERS ASSOCIATION

TILTECO INC.
TILLIT TESTING & ENGINEERING COMPANY
6355 N.W. 36th. St., Ste. 305, VIRGINIA GARDENS, Fl. 33166
Phone : (305)871-1530 . Fax : (305)871-1531
tilteco@aol.com
EB-0006719
WALTER A. TILLIT Jr. P.E.
FLORIDA Lic. # 44167

PERFORMANCE SYSTEM 2 ACCORDION SHUTTER

ALUMINUM TECHNOLOGIES CORP.
2219 WEST 80th STREET, BAY #5
HIALEAH, FLORIDA 33016
PH: (305) 362-1405 FAX: (305) 362-2024
PH: (1877) 369-4000

REV. No	DESCRIPTION	DATE	REV. No	DESCRIPTION	DATE
1	–	–	3	–	–
2	–	–	4	–	–

DRAWN BY: I.A.
DATE 10/22/09
DRAWING No 09-200
SHEET 7 OF 10

SPECIAL HI-PRESSURE RATING FOR FLOOR TO CEILING INSTALLATIONS W/ (B'), (C') & (D') TRACKS & BLADES (G2), (G2A)

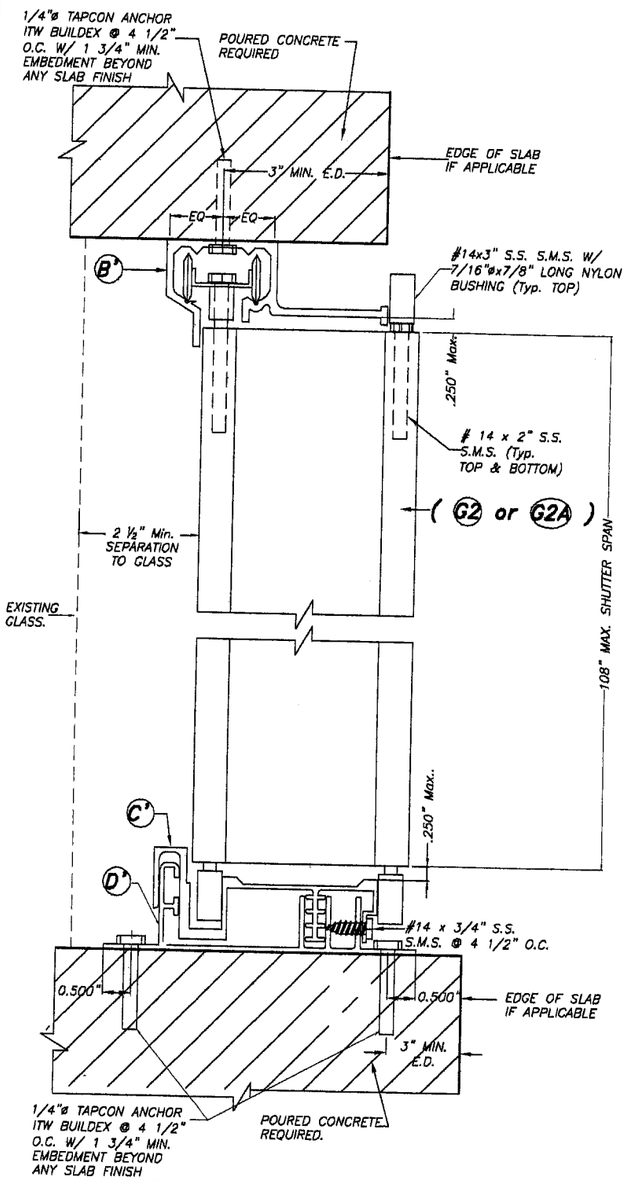

CEILING & FLOOR MOUNTING INSTALLATION SECTION F

SCALE : 3/8" = 1"

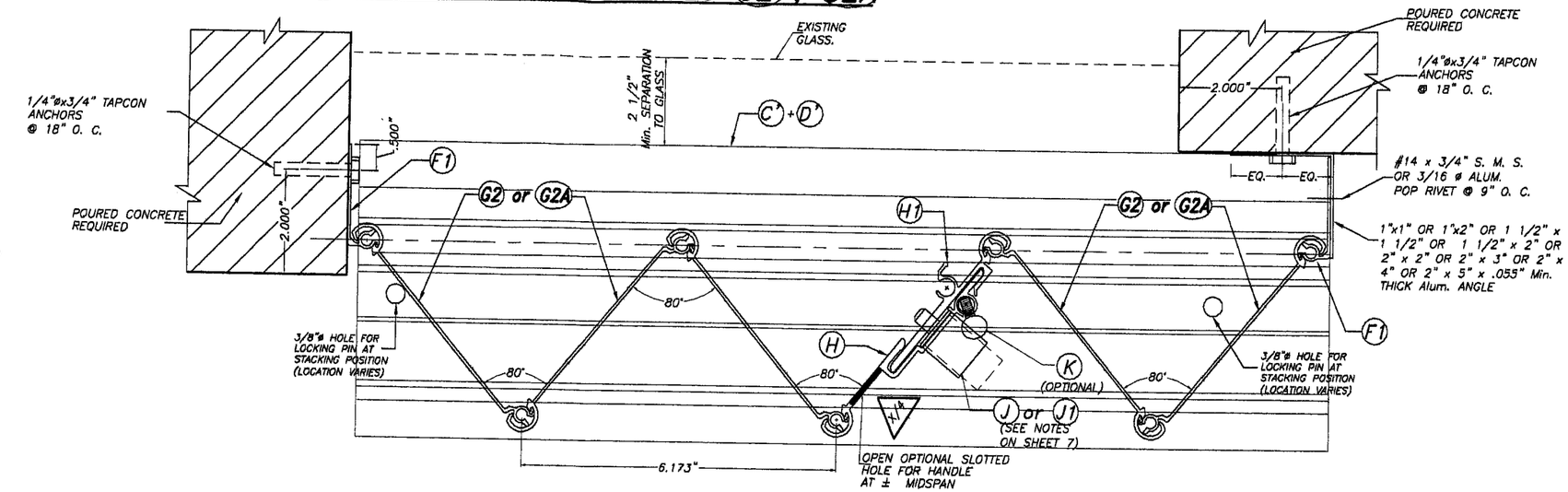

SECTION G-G

SCALE : 3/8" = 1"

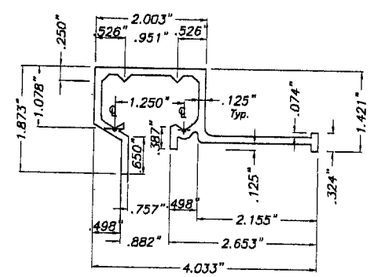

(B') **HEAVY DUTY CEILING HEADER**

6063-T6 ALLOY

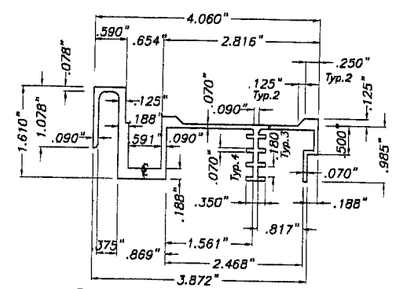

(C') **HEAVY DUTY SILL**

6063-T6 ALLOY

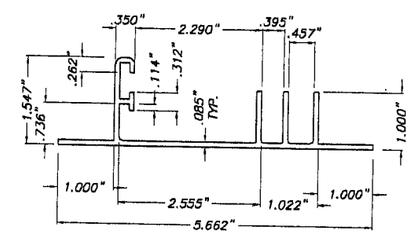

(D') **HEAVY DUTY ADJUSTABLE SILL ADAPTOR**

6063-T6 ALLOY

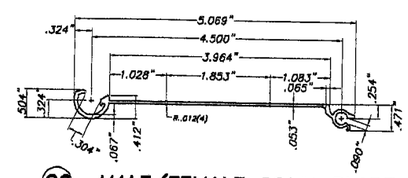

(G2) **MALE/FEMALE SOLID BLADE**

6063-T6 ALLOY

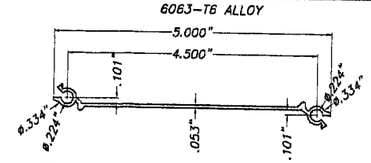

(G2A) **MALE/MALE SOLID BLADE**

6063-T6 ALLOY

COMPONENTS

SCALE : 3/8" = 1"

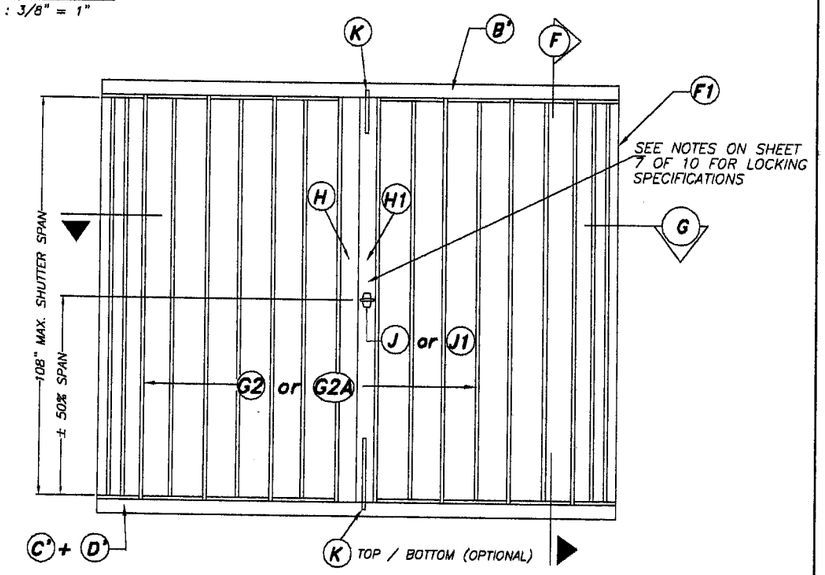

TYPICAL ELEVATION WITH (G2) AND (G2A) SOLID BLADES

N. T. S.

FLORIDA BUILDING CODE (High Velocity Hurricane Zone)

MAXIMUM PRESSURE RATING:
+120.0 psf, -138.7 psf

Approved as complying with the Florida Building Code
Date 02/17/2010
NOA# 10-0105.01
Miami Dade Product Control Division
By _____
MIAMI-DADE COUNTY

10/23/09
P.E. SEAL/SIGNATURE/DATE

© 2009 HURRICANE PROTECTION MANUFACTURERS ASSOCIATION

TILTECO INC.
TILLIT TESTING & ENGINEERING COMPANY
6355 N.W. 36th. St., Ste. 305, VIRGINIA GARDENS, Fl. 33166
Phone : (305)871-1530 . Fax : (305)871-1531
tilteco@aol.com
EB-0006719
WALTER A. TILLIT Jr. P.E.
FLORIDA Lic. # 44167

PERFORMANCE SYSTEM 2 ACCORDION SHUTTER

ALUMINUM TECHNOLOGIES CORP.
2219 WEST 80th STREET, BAY #5
HIALEAH, FLORIDA 33016
PH: (305) 362-1405 FAX: (305) 362-2024
PH: (1877) 369-4000

REV. No	DESCRIPTION	DATE	REV. No	DESCRIPTION	DATE
1	–	–	3	–	–
2	–	–	4	–	–

DRAWN BY: I.A.
10/22/09 DATE
09-200 DRAWING No
SHEET 8 OF 10

MAXIMUM DESIGN PRESSURE RATING "W" (p.s.f.) AND CORRESPONDING MAXIMUM ANCHOR SPACING (in.) SCHEDULE. +

(VALID FOR SECTION A ON SHEET 3).

MAXIMUM DESIGN LOAD "W" (p.s.f.)	WALL MOUNTING INSTALLATION AT TOP OR BOTTOM (TO CONCRETE) SHUTTER SPAN				WALL MOUNTING INSTALLATION AT TOP OR BOTTOM (TO MASONRY) SHUTTER SPAN			
	5'-0" OR LESS	5'-0" TO 8'-6"	8'-6" TO 10'-0"	10'-0" TO MAX. ALLOWED	5'-0" OR LESS	5'-0" TO 8'-6"	8'-6" TO 10'-0"	10'-0" TO MAX. ALLOWED
FROM 40.0 TO 60.0	9	9	9	7	9	7	4	–
	9	9	9	5.5	9	6.5	3.5	–
	9	9	7	4	9	4.5	–	–
FROM >60.0 TO 75.0	9	9	7.5	5.5	9	3.5	–	–
	9	8.5	6	4.5	9	3	–	–
	9	6	4	3	8	–	–	–
FROM >75.0 TO 90.0	9	7	5	5	9	–	–	–
	9	5.5	4	4	9	–	–	–
	9	4	3	–	6.5	–	–	–
FROM >90.0 TO 120.0	9	4	3.5	–	4	–	–	–
	9	3.5	3	–	3.5	–	–	–
	7	–	–	–	–	–	–	–
FROM >120.0 TO 170.0	6	3.5	3.5	–	–	–	–	–
	4.5	3	3	–	–	–	–	–
	3	–	–	–	–	–	–	–
FROM >170.0 TO 195.0	4.5	3.5	–	–	–	–	–	–
	3.5	3	–	–	–	–	–	–
	–	–	–	–	–	–	–	–

MAXIMUM DESIGN PRESSURE RATING "W" (p.s.f.) AND CORRESPONDING MAXIMUM ANCHOR SPACING (in.) SCHEDULE. +

(VALID FOR SECTIONS C1 ON SHEET 4).

MAXIMUM DESIGN LOAD "W" (p.s.f.)	WALL MOUNTING INSTALLATION AT TOP OR BOTTOM (TO CONCRETE) SHUTTER SPAN			WALL MOUNTING INSTALLATION AT TOP OR BOTTOM (TO MASONRY) SHUTTER SPAN		
	5'-0" OR LESS	5'-0" TO 8'-6"	8'-6" TO MAX. ALLOWED	5'-0" OR LESS	5'-0" TO 8'-6"	8'-6" TO MAX. ALLOWED
FROM 40.0 TO 60.0	9	9	9	9	9	5
	9	9	9	9	9	4.5
	9	9	8	9	5.5	3
FROM >60.0 TO 75.0	9	9	9	9	7	4
	9	9	9	9	6.5	3.5
	9	9	6.5	8	4.5	–
FROM >75.0 TO 90.0	9	9	9	9	5	3
	9	9	8	9	4.5	3
	9	8.5	5.5	6.5	3	–
FROM >90.0 TO 120.0	9	8.5	7.5	7.5	3	–
	9	7	6	7	2.5	–
	9	4.5	4	5	–	–
FROM >120.0 TO 170.0	9	7.5	7.5	4	–	–
	9	6	6	3.5	–	–
	6.5	4	4	–	–	–
FROM >170.0 TO 195.0	9	7.5	–	3	–	–
	7.5	6	–	–	–	–
	5	4	–	–	–	–

MAXIMUM DESIGN PRESSURE RATING "W" (p.s.f.) AND CORRESPONDING MAXIMUM ANCHOR SPACING (in.) SCHEDULE. +

(VALID FOR SECTIONS B, B1, B2 ON SHEET 3).

MAXIMUM DESIGN LOAD "W" (p.s.f.)	FLOOR/CEILING MOUNTING INSTALLATION TOP OR BOTTOM (TO CONCRETE) SHUTTER SPAN		
	5'-0" OR LESS	5'-0" TO 8'-6"	8'-6" TO MAX. ALLOWED
FROM 40.0 TO 60.0	6	6	6
	6	6	5.5
	6	6	5
FROM >60.0 TO 75.0	6	6	5.5
	6	6	4.5
	6	6	4.5
FROM >75.0 TO 90.0	6	6	5
	6	5.5	4.5
	6	5	4
FROM >90.0 TO 120.0	6	4.5	4.5
	6	4	3.5
	6	3.5	3.5
FROM >120.0 TO 170.0	5.5	4.5	4.5
	5	3.5	3.5
	4.5	3.5	3.5
FROM >170.0 TO 195.0	5	4.5	–
	4	3.5	–
	4	3.5	–

MAXIMUM DESIGN PRESSURE RATING "W" (p.s.f.) AND CORRESPONDING MAXIMUM ANCHOR SPACING (in.) SCHEDULE. +

(VALID FOR SECTION C ON SHEET 4).

MAXIMUM DESIGN LOAD "W" (p.s.f.)	WALL MOUNTING INSTALLATION AT TOP OR BOTTOM (TO CONCRETE) SHUTTER SPAN			WALL MOUNTING INSTALLATION AT TOP OR BOTTOM (TO MASONRY) SHUTTER SPAN		
	5'-0" OR LESS	5'-0" TO 8'-6"	8'-6" TO MAX. ALLOWED	5'-0" OR LESS	5'-0" TO 8'-6"	8'-6" TO MAX. ALLOWED
FROM 40.0 TO 60.0	6	6	6	6	6	6
	6	6	6	6	6	5.5
	6	6	6	6	5.5	3.5
FROM >60.0 TO 75.0	6	6	6	6	6	5
	6	6	6	6	6	4.5
	6	6	6	6	4.5	3.5
FROM >75.0 TO 90.0	6	6	6	6	6	4.5
	6	6	6	6	5.5	4
	6	6	6	6	3.5	3
FROM >90.0 TO 120.0	6	6	6	6	4.5	4
	6	6	6	6	4	3.5
	6	6	6	5	3	–
FROM >120.0 TO 170.0	6	6	6	5.5	4	4
	6	6	6	4.5	3.5	3.5
	6	6	6	3.5	–	–
FROM >170.0 TO 195.0	6	6	–	4.5	4	–
	6	6	–	4	3.5	–
	6	6	–	3	–	–

TYP. ANCHOR SPACING LEGEND
TAPCON OR MAXI-SET TAPCONS
CALK-IN
CRETE-FLEX SS4

+ MINIMUM ANCHOR SPACINGS LISTED BELOW ARE AS PER MIN. EDGE DISTANCE SCHEDULE. FOR E.D. LESS THAN INDICATED ON SCHEDULE, REDUCE ANCHOR SPACING BY MULTIPLYING SPACING SHOWN ON SCHEDULE BY THE FOLLOWING FACTORS. FOR THIS OPERATION TO BE POSSIBLE, REDUCED SPACING OBTAINED USING FACTOR SHALL NOT BE LESS THAN MINIMUM SPACING INDICATED FOR EACH ANCHOR TYPE AT ANCHORS LEGEND.

ACTUAL E.D.	FACTOR		
	TAPCON	CALK-IN	CRETE-FLEX
	Min. spacing=3"	Min. spacing=2 1/2"	Min. spacing=3"
1 1/2"	.35	–	0.57 00
2 1/2"	–	0.50	–
3"	1.00	0.63	1.00 00

00 FACTOR IS APPLICABLE ONLY FOR POURED CONCRETE

MINIMUM ANCHORS E.D. SCHEDULE

ANCHORS TYPE	MINIMUM EDGE DISTANCE (E.D.)	
	CONCRETE	C. BLOCK
1/4"ø TAPCON 3192 psi Min. CONCRETE	3"	3"
1/4"ø CALK-IN 3000 psi Min. CONCRETE	3"	4"
1/4"ø CRETE FLEX 3350 psi Min. CONCRETE	3"	3"

MAXIMUM DESIGN PRESSURE RATING "W" (p.s.f.) AND CORRESPONDING MAXIMUM SPAN "L" SCHEDULE.

MAXIMUM DESIGN LOAD "W" (p.s.f.)	MAXIMUM SHUTTER SPAN SPAN FOR ALL SECTIONS 0		MINIMUM SEPARATION TO GLASS (in.) ALL SECTIONS
	Max. SHUTTER SPAN L+ (ft.)	Max. SHUTTER SPAN L- (ft.)	
40	13'-0"	14'-1"	3"
45	12'-8"	14'-1"	3"
50	12'-4"	14'-1"	3"
55	12'-0"	13'-5"	3"
60	11'-10"	12'-10"	3"
65	11'-6"	12'-4"	3"
70	11'-4"	11'-11"	3"
75	11'-2"	11'-6"	3"
80	11'-0"	11'-2"	3"
85	10'-9"	11'-0"	3"
90	10'-6"	10'-6"	3"
95	10'-2"	10'-3"	2 7/8"
100	9'-11"	9'-11"	2 7/8"
105	9'-9"	9'-8"	2 5/8"
110	9'-6"	9'-6"	2 1/2"
115	9'-3"	9'-3"	2 1/2"
120	9'-1"	9'-1"	2 1/2"
125	8'-10"	8'-10"	2 1/2"
130	8'-6"	8'-6"	2 3/8"
135	----	8'-2"	2 3/8"
140	----	7'-11"	2 3/8"
145	----	7'-7"	2 3/8"
150	----	7'-4"	2 3/8"
155	----	7'-1"	2 3/8"
160	----	6'-11"	2 3/8"
165	----	6'-8"	2 3/8"
170	----	6'-6"	2 3/8"
175	----	6'-4"	2 3/8"
180	----	6'-1"	2 3/8"
185	----	5'-11"	2 3/8"
190	----	5-10"	2 3/8"
195	----	5'-8"	2 3/8"

0 NOTES:

(1) L+: MAXIMUM ALLOWABLE SHUTTER SPAN FOR A GIVEN POSITIVE DESIGN LOAD.
L-: MAX. ALLOWABLE SHUTTER SPAN FOR A GIVEN NEGATIVE DESIGN LOAD.

(2) PROCEDURE TO DETERMINE MAXIMUM SHUTTER SPAN FOR WALL MOUNTINGS OR FLOOR/CEILING:

GIVEN A POSITIVE DESIGN LOAD, DETERMINE MAXIMUM SHUTTER SPAN "L+" FROM SCHEDULE.
GIVEN A NEGATIVE DESIGN LOAD, DETERMINE MAXIMUM SHUTTER SPAN "L-" FROM SCHEDULE.

FINAL MAXIMUM ALLOWABLE SHUTTER SPAN IS EQUAL TO THE MINIMUM DETERMINED SHUTTER SPAN BETWEEN "L+" AND "L-".

FLORIDA BUILDING CODE (High Velocity Hurricane Zone)

Approved as complying with the Florida Building Code
Date 02/17/2010
NOA# 10-0105.01
Miami Dade Product Control Division
By Helmy A. Abdelhamid

MIAMI-DADE COUNTY

10/23/09

P.E. SEAL/SIGNATURE/DATE

© 2009 HURRICANE PROTECTION MANUFACTURERS ASSOCIATION

TILTECO INC.
TILLIT TESTING & ENGINEERING COMPANY
6355 N.W. 36th. St., Ste. 305, VIRGINIA GARDENS, Fl. 33166
Phone : (305)871-1530 , Fax : (305)871-1531
tilteco@aol.com
EB-0006719
WALTER A. TILLIT Jr. P.E.
FLORIDA Lic. # 44167

PERFORMANCE SYSTEM 2 ACCORDION SHUTTER

ALUMINUM TECHNOLOGIES CORP.
2219 WEST 80th STREET, BAY #5
HIALEAH, FLORIDA 33016
PH: (305) 362-1405 FAX: (305) 362-2024
PH: (1877) 369-4000

REV. No	DESCRIPTION	DATE	REV. No	DESCRIPTION	DATE
1	–	–	3	–	–
2	–	–	4	–	–

DRAWN BY: I.A.
DATE: 10/22/09
DRAWING No: 09-200
SHEET 9 OF 10

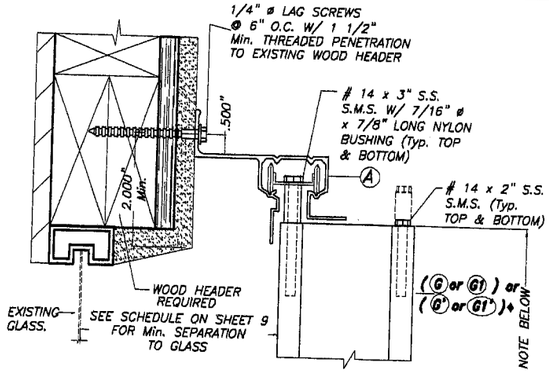

ALTERNATIVE 1

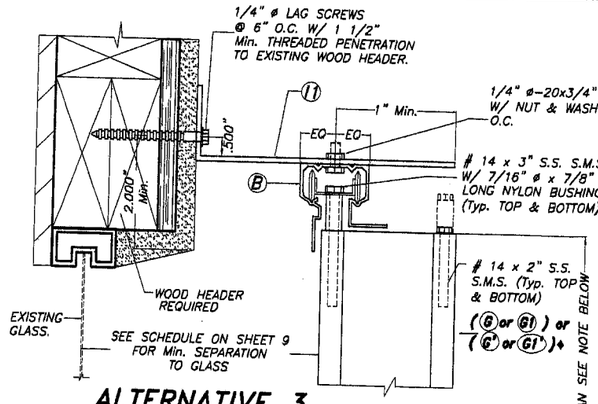

ALTERNATIVE 3

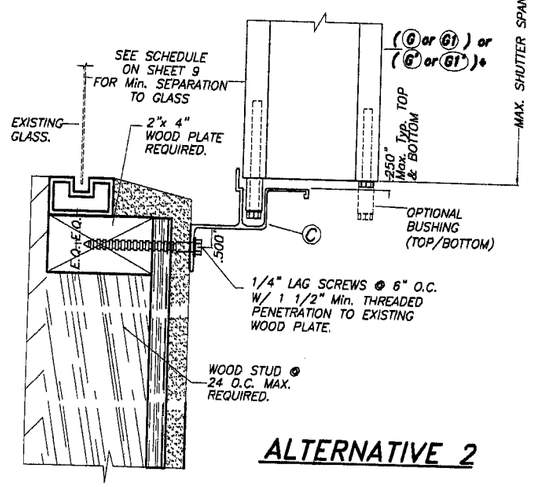

ALTERNATIVE 2

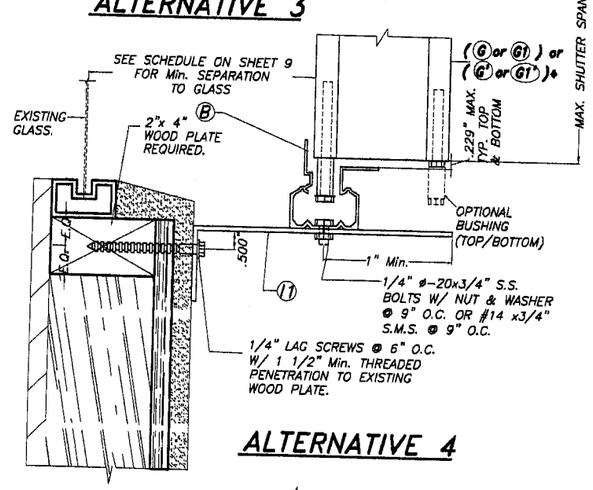

ALTERNATIVE 4

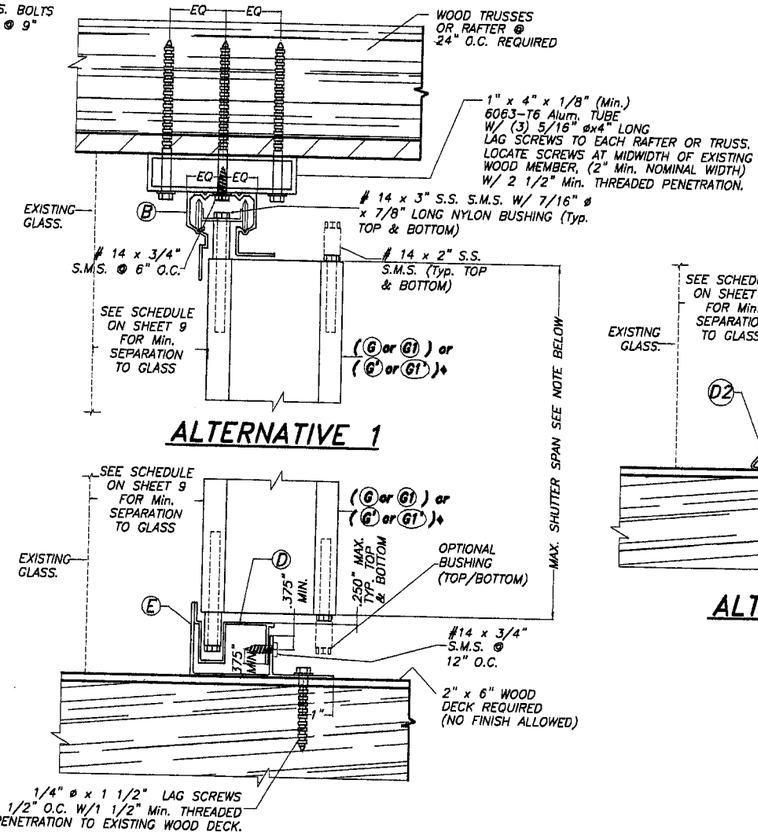

ALTERNATIVE 1

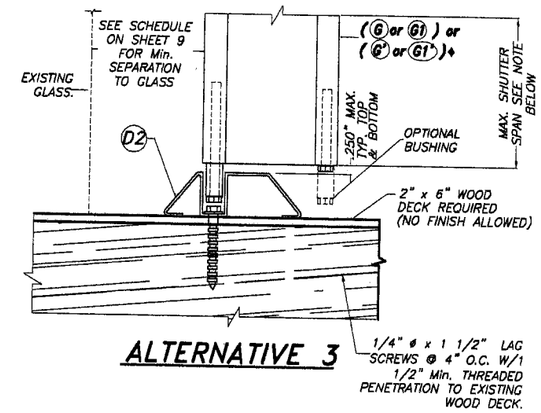

ALTERNATIVE 3

ALTERNATIVE 2

WALL MOUNTING INSTALLATION (OFFSET) SECTIONS B

SCALE: 1/4"=1"

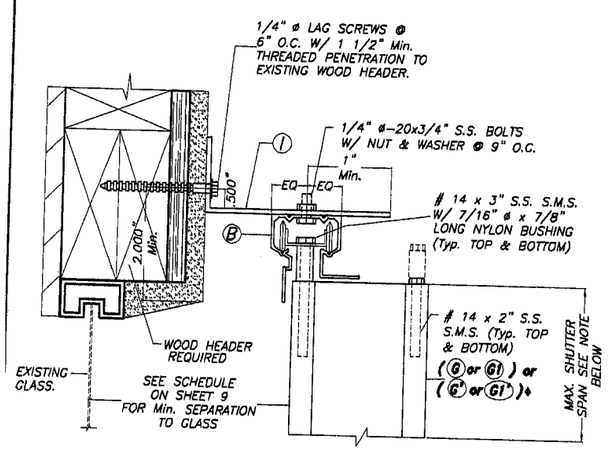

ALTERNATIVE 5

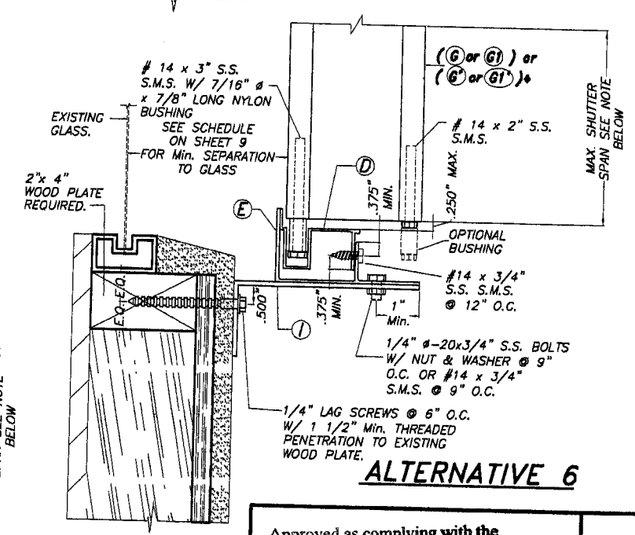

ALTERNATIVE 6

WALL MOUNTING INSTALLATION (OFFSET) SECTIONS A

SCALE: 1/4"=1"

INSTALLATION DETAILS ON EXISTING WOOD BUILDINGS

NOTE :
WALL/FLOOR/CEILING MOUNTING SECTIONS CAN BE COMBINED IN ANY WAY TO SUIT ANY INSTALLATION.

♦ SEE LIMITATIONS OF USE FOR BLADES (G) AND (G1) ON SHEET 6.

NOTES :

1. INSTALLATIONS ARE ONLY VALID FOR DESIGN WIND LOADS LESS THAN OR EQUAL TO 75 p.s.f. AND 9'-0" Max. SHUTTER SPAN.
2. FOR NEW WOOD FRAME CONSTRUCTION: WOOD MEMBERS TO BE SOUTHERN PINE No. 2, W/ SPECIFIC DENSITY OF 0.55 OR EQUAL.

FLORIDA BUILDING CODE (High Velocity Hurricane Zone)

Approved as complying with the Florida Building Code
Date 02/17/2010
NOA# 10-0105.01
Miami Dade Product Control Division
By

MIAMI-DADE COUNTY

10/23/09
P.E. SEAL/SIGNATURE/DATE

© 2009 HURRICANE PROTECTION MANUFACTURERS ASSOCIATION

TILLECO INC.
TILLIT TESTING & ENGINEERING COMPANY
6355 N.W. 36th. St., Ste. 305, VIRGINIA GARDENS, FL 33166
Phone : (305)871-1530 Fax : (305)871-1531
tilteco@aol.com
EB-0006719
WALTER A. TILLIT Jr. P.E.
FLORIDA Lic. # 44167

PERFORMANCE SYSTEM 2 ACCORDION SHUTTER

ALUMINUM TECHNOLOGIES CORP.
2219 WEST 80th STREET. BAY #5
HIALEAH, FLORIDA 33016
PH: (305) 362-1405 FAX: (305) 362-2024
PH: (1877) 369-4000

REV. No	DESCRIPTION	DATE	REV. No	DESCRIPTION	DATE
1	–	–	3	–	–
2	–	–	4	–	–

DRAWN BY: I.A.
DATE: 10/22/09
DRAWING No: 09-200
SHEET 10 OF 10