MIAMI-DADE COUNTY
BUILDING CODE COMPLIANCE OFFICE (BCCO)
PRODUCT CONTROL DIVISION

MIAMI-DADE COUNTY, FLORIDA
METRO-DADE FLAGLER BUILDING

140 WEST FLAGLER STREET, SUITE 1603
MIAMI, FLORIDA 33130-1563
(305) 375-2901 FAX (305) 375-2908
www.miamidade.gov

# NOTICE OF ACCEPTANCE (NOA)

**Metcoe Skylight Specialty Co., Inc.**
**1715 W. 135th Street**
**Gardena, CA 90249**

**SCOPE:**
This NOA is being issued under the applicable rules and regulations governing the use of construction materials. The documentation submitted has been reviewed by Miami-Dade County Product Control Division and accepted by the Board of Rules and Appeals (BORA) to be used in Miami Dade County and other areas where allowed by the Authority Having Jurisdiction (AHJ).

This NOA shall not be valid after the expiration date stated below. The Miami-Dade County Product Control Division (In Miami Dade County) and/or the AHJ (in areas other than Miami Dade County) reserve the right to have this product or material tested for quality assurance purposes. If this product or material fails to perform in the accepted manner, the manufacturer will incur the expense of such testing and the AHJ may immediately revoke, modify, or suspend the use of such product or material within their jurisdiction. BORA reserves the right to revoke this acceptance, if it is determined by Miami-Dade County Product Control Division that this product or material fails to meet the requirements of the applicable building code.

This product is approved as described herein, and has been designed to comply with the High Velocity Hurricane Zone of the Florida Building Code.

**DESCRIPTION: 9/16" Laminated Glass and Aluminum Extrusions Skylight System**

**APPROVAL DOCUMENT:** Drawing No. 08-073, titled " 16'-0" Max. Wide Impact Resistant Gabled Skylight " sheets 1 through 7 of 7, dated March 18, 2008, last revision #1 dated March 18, 2008, prepared by Tilteco, Inc., signed and sealed by Walter A. Tillit Jr., P.E., bearing the Miami-Dade County Product Control Renewal stamp with the Notice of Acceptance number and the expiration date by Miami-Dade County Product Control Division.

**MISSILE IMPACT RATING: Large and Small Missile Impact**

**LABELING:** Each unit shall bear a permanent label with the manufacturer's name or logo, city, state and the following statement: "Miami-Dade County Product Control Approved", unless otherwise noted herein.

**RENEWAL** of this NOA shall be considered after a renewal application has been filed and there has been no change in the applicable building code negatively affecting the performance of this product.

**TERMINATION** of this NOA will occur after the expiration date or if there has been a revision or change in the materials, use, and/or manufacture of the product or process. Misuse of this NOA as an endorsement of any product, for sales, advertising or any other purposes shall automatically terminate this NOA. Failure to comply with any section of this NOA shall be cause for termination and removal of NOA.

**ADVERTISEMENT:** The NOA number preceded by the words Miami-Dade County, Florida, and followed by the expiration date may be displayed in advertising literature. If any portion of the NOA is displayed, then it shall be done in its entirety.

**INSPECTION:** A copy of this entire NOA shall be provided to the user by the manufacturer or its distributors and shall be available for inspection at the job site at the request of the Building Official.

This NOA **renews NOA # 08-0408.01** and consists of this page 1, evidence submitted pages E-1, E-2 & E-3 as well as approval document mentioned above.

The submitted documentation was reviewed by **Helmy A. Makar, P.E., M.S.**

MIAMI-DADE COUNTY APPROVED

Helmy A. Makar
02/17/2010

**NOA No. 10-0112.03**
**Expiration Date: 05/19/2015**
**Approval Date: 02/17/2010**

## NOTICE OF ACCEPTANCE: EVIDENCE SUBMITTED

**1. EVIDENCE SUBMITTED UNDER PREVIOUS APPROVAL # 05-0104.01**

**A. DRAWINGS**

1. *Drawing No. 04-138, titled "16'-0" Max. Wide Impact Resistant Gabled Skylight " sheets 1 through 7 of 7, dated 10/15/04, last revision #1 dated 04/22/05, prepared, signed and sealed by Walter A. Tillit Jr., P.E.,*

**B. TESTS**

1. *Test report on Large Missile Impact Test, Cyclic Load Test, and Uniform Static air Pressure Test on Metcoe Skylight Specialty Systems, prepared by American Test Lab of South Florida, Report No. 0204.01-04, dated 08/18/04, signed and sealed by William R. Mehner, P.E.*

**C. CALCULATIONS**

1. *Calculation titled " 16'-0" Max. Wide Impact Resistant Gabled Skylight ", 21 pages, dated 11/08/04, signed and sealed by Walter A. Tillit Jr., P.E.*

**D. QUALITY ASSURANCE**

1. *By Miami-Dade County Building Code Compliance office.*

**E. *MATERIAL CERTIFICATIONS***

1. *Mill Certified Test Report issued by International Extrusion Corporation, dated 08/06/04, for Die #21116 with the Chemical Composition and Alloy Temper.*
2. *Mill Certified Test Report issued by International Extrusion Corporation, dated 11/18/04, for Die #H-13273 with the Chemical Composition and Alloy Temper.*

**2. EVIDENCE SUBMITTED UNDER PREVIOUS APPROVAL #05-0929.07**

**A. DRAWINGS**

1. *Drawing No. 05-303, titled "16'-0" Max. Wide Impact Resistant Gabled Skylight " sheets 1 through 7 of 7, dated September 23, 2005, last revision #1 dated 09/23, 2005, prepared by Tilteco, Inc., signed and sealed by Walter A. Tillit Jr., P.E.*

**B. TESTS**

1. *None.*

**C. CALCULATIONS**

1. *None.*

**D. QUALITY ASSURANCE**

1. *By Miami-Dade County Building Code Compliance office.*

**E. MATERIAL CERTIFICATIONS**

1. *None.*

**Helmy A. Makar, P.E., M.S.**
**Senior Product Control Examiner**
**NOA No. 10-0112.03**
**Expiration Date: 05/19/2015**
**Approval Date: 02/17/2010**

## NOTICE OF ACCEPTANCE: EVIDENCE SUBMITTED

**3. EVIDENCE SUBMITTED UNDER PREVIOUS APPROVAL #07-0511.07**

**A. DRAWINGS**

1. *Drawing No. 301-test, titled " Pyramid Unit Plan " sheets 1 through 7 of 7, dated April 25, 2006, last revision dated August 30, 2007, prepared by Sentech Consultants, LLC, signed and sealed by Alfonso E. Lopez, P.E.*

**B. TESTS**

1. *Test report on Large Missile Impact Test, Cyclic Load Test, and Uniform Static air Pressure Test on Metcoe Skylight Specialty Systems, prepared by American Test Lab of South Florida, Report No. 1208.01-06, dated 01/12/2007, signed and sealed by Henry Hattem, P.E.*
2. *Addendum to test report #1208.01-06, prepared by American Test Lab of South Florida, dated 09/05/2007, signed and sealed by Henry Hattem, P.E.*

**C. CALCULATIONS**

1. *Calculation titled " 16'-6" x 16"-6" Pyramid Test Unit Structural Design Calculations, 28 pages, dated 01/21/2007, signed & sealed by Alfonso E. Lopez, P.E.*

**D. QUALITY ASSURANCE**

1. *By Miami-Dade County Building Code Compliance office.*

**E. MATERIAL CERTIFICATIONS**

1. *None.*

**4. EVIDENCE SUBMITTED UNDER PREVIOUS APPROVAL #08-0408.01**

**A. DRAWINGS**

1. *Drawing No. 08-073, titled " 16'-0" Max. Wide Impact Resistant Gabled Skylight " sheets 1 through 7 of 7, dated March 18, 2008, last revision #1 dated March 18, 2008, prepared by Tilteco, Inc., signed and sealed by Walter A. Tillit Jr., P.E.*

**B. TESTS**

1. *None.*

**C. CALCULATIONS**

1. *None.*

**D. QUALITY ASSURANCE**

1. *By Miami-Dade County Building Code Compliance office.*

**E. MATERIAL CERTIFICATIONS**

1. *None.*

**Helmy A. Makar, P.E., M.S.**
**Senior Product Control Examiner**
**NOA No. 10-0112.03**
**Expiration Date: 05/19/2015**
**Approval Date: 02/17/2010**

## NOTICE OF ACCEPTANCE: EVIDENCE SUBMITTED

**5. NEW EVIDENCE SUBMITTED**

**A. DRAWINGS**

*1. None.*

**B. TESTS**

*1. None.*

**C. CALCULATIONS**

*1. None.*

**D. QUALITY ASSURANCE**

*1. By Miami-Dade County Building Code Compliance office.*

**E. MATERIAL CERTIFICATIONS**

*1. None.*

**Helmy A. Makar, P.E., M.S.**
**Senior Product Control Examiner**
**NOA No. 10-0112.03**
**Expiration Date: 05/19/2015**
**Approval Date: 02/17/2010**

## GENERAL NOTES:

1. SKYLIGHT SHOWN ON THIS PRODUCT APPROVAL DOCUMENT (P.A.D.) HAS BEEN VERIFIED FOR COMPLIANCE IN ACCORDANCE WITH THE **2007** EDITION OF THE FLORIDA BUILDING CODE.
   THIS SKYLIGHT MAY BE INSTALLED AT HIGH VELOCITY HURRICANE ZONES.
   DESIGN LIVE AND WIND LOADS SHALL BE DETERMINED AS PER SECTIONS 1616 AND 1620 OF THE ABOVE MENTIONED CODE. IN ORDER TO VERIFY THAT ANCHORS ON THIS P.A.D. ARE NOT OVERSTRESSED UNDER DESIGN PRESSURE RATINGS INDICATED ON NOTE 2 BELOW, FOR EVERY SINGLE APPLICATION OF THIS SKYLIGHT SYSTEM A 33% INCREASE IN ALLOWABLE STRESS FOR WIND LOADS SHALL NOT BE USED IN THEIR ANALYSIS.

   1A. SHOP DRAWINGS AND STRUCTURAL CALCULATIONS SHALL BE SUBMITTED FOR EVERY PERMIT. DRAWINGS MAY INCLUDE LARGER SKYLIGHT WIDTH, LENGTH AND RISE W/ CORRESPONDING LARGER CROSS SECTION RAFTERS & MULLIONS, BUT PRESSURE RATING AS WELL AS MAX. GLASS PANEL SIZE SHALL **NOT** EXCEED THOSE INDICATED ON THIS DRAWING (SEE NOTES 2 AND 11 RESPECTIVELY). THIS P.A.D. COVERS GABLE SHAPE SKYLIGHTS. OTHER SHAPES/CONFIGURATIONS W/ SLOPED GLASS MAY BE ALSO ACCEPTED. PROVIDED THAT ABOVE MENTIONED CONDITIONS ARE COMPLIED WITH. THE DESIGN OF LARGER COMPONENTS FOR LARGER SKYLIGHTS SHALL BE PERFORMED BY A FLORIDA P.E. AND REVIEWED BY THE STRUCTURAL PLANS EXAMINER OF THE CORRESPONDING BUILDING DEPARTMENT ON A JOB SPECIFIC BASIS. (SEE NOTE 18).

2. DESIGN PRESSURE RATING AT ROOF IS: +75.0 psf (WINDWARD SIDE), −75.0psf (LEEWARD SIDE).
   DESIGN PRESSURE RATING AT WALL IS: +75.0, −75.0 psf.
   DESIGN PRESSURE RATING AS PER SECTION 1626 OF THE FLORIDA BUILDING CODE, PER PROTOCOLS TAS 201, 202, 203, PER AMERICAN TESTING LABORATORY REPORT # 0204.01−04.
   WATER AND AIR INFILTRATION TESTING AS PER PROTOCOL TAS 202, QUALIFYING ASTM E 331 AND ASTM E 283 RESPECTIVELY.

3. STRUCTURAL ADEQUACY OF SUPPORTING STRUCTURAL MEMBERS IS NOT PART OF THIS P.A.D. STRUCTURAL DESIGN OF THE STRUCTURE THAT WILL PROVIDE SUPPORT TO THIS SKYLIGHT SHALL BE PERFORMED BY THE STRUCTURAL ENGINEER OF RECORD FOR THE PROJECT. STRUCTURAL DESIGN SHALL INCLUDE AND TAKE INTO CONSIDERATION THE ACTUAL Vx AND Vy LOADS TRANSFERRED FROM THIS SKYLIGHT TO THE SUPPORT STRUCTURE, BASED ON DEAD, LIVE & WIND LOADS AND USING THE LOAD COMBINATIONS AS PER SECTIONS 2.3 OR 2.4 OF A.S.C.E. 7−05 STANDARD. ADEQUACY OF SUPPORTING STRUCTURAL MEMBERS SHALL BE REVIEWED BY THE STRUCTURAL PLANS EXAMINER OF THE CORRESPONDING BUILDING DEPARTMENT ON A JOB SPECIFIC BASIS.

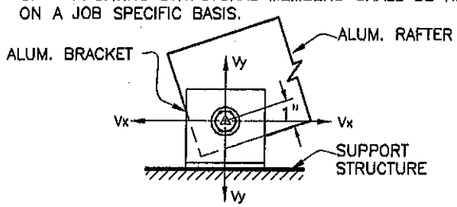


4. ALL ALUMINUM EXTRUSIONS SHALL BE ALUMINUM ASSOCIATION 6063−T6 ALLOY AND TEMPER.

5. ALL ALUMINUM SHEET SHALL BE ALUMINUM ASSOCIATION 5005−H16 ALLOY AND HARDNESS.

6. ALL SCREWS TO BE STAINLESS STEEL AISI SERIES 304 OR 316 STRAIN HARDENED OR HEAT TREATED WITH MIN. TENSILE LOAD CAPACITY Tu=4275# & MIN. ULTIMATE SHEAR LOAD CAPACITY Su=2700#, PER ASTM B−593 & B−594.

7. ALL ALUMINUM POP RIVETS TO BE 5052 ALUMINUM ALLOY WITH ALUMINUM MANDREL.

8. BOLTS TO BE STAINLESS STEEL AISI SERIES 304 OR 316 WITH 50 ksi (Min.) YIELD STRENGTH AND 90 ksi TENSILE STRENGTH, PER ASTM B−593 AND B−594.

9. GLAZING SYSTEM SHALL COMPRISE OF THE FOLLOWING COMPONENTS:

   9.1. ALL GASKETS TO BE MADE OF EXTRUDED SILICONE, WITH DUROMETER HARDNESS=55, ULTIMATE TENSILE=1400 psi MIN., ELONGATION=334% MIN.

   9.2. ALL BACKER RODS TO BE TUNDRA FOAM POLYURETHANE MANUFACTURED BY INDUSTRIAL THERMO POLYMERS LIMITED, WITH THE FOLLOWING PHYSICAL PROPERTIES:

| | |
|---|---|
| POLYURETHANE QUALITY | ASTM 1564 |
| NON−COMPRESSED DENSITY | 2−3 lbs/cu. ft. |
| COMPRESSED DENSITY | 4−6 lbs/cu. ft. |
| COMPRESSION DEFLECTION | 1 psi @ 25%. |
| ELONGATION | 130%. |
| TENSILE STRENGTH | 15 lbs MIN. |
| TEMPERATURE RANGE (INTERMITTENT) | −70° TO 450°F. |

   9.3. STRUCTURAL SILICONE FOR GLASS SEALANT AT RAFTERS TO BE DOW CORNING 995 SILICONE STRUCTURAL ADHESIVE.

   9.4. ALL BACKER ROD JOINTS SEALANT TO BE DOW CORNING 791 SILICONE PERIMETER SEALANT.

   9.5. ALL GLAZING BLOCKS TO BE NEOPRENE OR RUBBER MATERIAL WITH A DUROMETER HARNESS=90.

10. ALL FLASHING TO BE LAPPED 3" AND SET ON A BED OF SILICONE SEALANT.

11. GLASS TO BE SENTRY GLASS PLUS, PER MIAMI−DADE COUNTY APPROVED NOA No: 07−1116.04, 9/16" THICK IMPACT RESISTANT LAMINATED GLASS, MANUFACTURED BY EI. DUPONT DENEMOURS, INC. Max. GLASS PANEL SIZE IS 48" x 100 5/16". (MAX. GLASS AREA = 33.4 $FT^2$ BETWEEN SUPPORTS), IT SHALL CONSIST OF 1/4" HEAT STRENGTHENED GLASS + 0.090" SENTRY GLASS PLUS INTERLAYER BY DUPONT + 1/4" HEAT STRENGTHENED GLASS.

12. ALL WELDING TO CONFORM TO THE AMERICAN WELDING SOCIETY A.W.S. D.1.2 2004 EDITION REGULATIONS. USE CERTIFIED WELDERS. USE ER−4043 OR ER−5356 ELECTRODES.

13. ALUMINUM MEMBERS IN CONTACT WITH CONCRETE SHALL BE PROTECTED ACCORDINGLY WITH SECTION 2003.8.4.4 OF THE 2004 EDITION OF THE FLORIDA BUILDING CODE.

14. ALUMINUM MEMBERS IN CONTACT WITH STEEL SHALL BE PROTECTED ACCORDINGLY WITH SECTION 2003.8.4.2 OF THE 2004 EDITION OF THE FLORIDA BUILDING CODE.

15. PAINT, FINISH AND COLOR TO BE SELECTED BY ARCHITECT OF RECORD FOR THE JOB IN COORDINATION W/ METCOE, AND SHALL COMPLY WITH AAMA 1600 SPECIFICATION, SECTION 3.11.

16. IT SHALL BE THE RESPONSIBILITY OF THE CONTRACTOR TO VERIFY THE SOUNDNESS OF THE STRUCTURE WHERE THE SKYLIGHT IS TO BE ATTACHED TO INSURE PROPER ANCHORAGE. SEE NOTE 3 ABOVE.
    CONTRACTOR IS TO SEAL/CAULK ALL SKYLIGHT COMPONENT EDGES AS INDICATED ON THIS DRAWING TO PREVENT WIND/RAIN INTRUSION.

17. SKYLIGHT INSTALLATION SHALL COMPLY WITH SPECS INDICATED IN THIS DRAWING PLUS ANY BUILDING AND ZONING REGULATIONS PROVIDED BY THE JURISDICTION WHERE PERMIT IS APPLIED TO.

18. (a) THE PRODUCT APPROVAL DOCUMENT (P.A.D.) PREPARED BY THIS ENGINEER IS GENERIC AND DOES NOT PROVIDE INFORMATION FOR A SITE SPECIFIC PROJECT.

    (b) CONTRACTOR TO BE RESPONSIBLE FOR THE SELECTION, PURCHASE AND INSTALLATION INCLUDING LIFE SAFETY OF THIS PRODUCT BASED ON THIS PRODUCT APPROVAL PROVIDED HE/SHE DOES NOT DEVIATE FROM THE CONDITIONS DETAILED ON THIS DOCUMENT. CONSTRUCTION SAFETY AT SITE IS THE CONTRACTOR'S RESPONSIBILITY.

    (c) THIS PRODUCT APPROVAL DOCUMENT WILL BE CONSIDERED INVALID IF MODIFIED.

    (d) SITE SPECIFIC PROJECTS SHALL BE PREPARED BY A FLORIDA REGISTERED ENGINEER OR ARCHITECT WHICH WILL BECOME THE PROFESSIONAL OF RECORD (P.O.R.) FOR THE PROJECT AND WHO WILL BE RESPONSIBLE FOR THE PROPER USE OF THE P.A.D. PROFESSIONAL OF RECORD, ACTING AS DELEGATED ENGINEER TO THE P.A.D. ENGINEER, SHALL SUBMIT TO THIS LATTER THE SITE SPECIFIC DRAWINGS FOR REVIEW.

    (e) THIS P.A.D. SHALL BEAR THE DATE AND ORIGINAL SEAL AND SIGNATURE OF THE PROFESSIONAL ENGINEER THAT PREPARED IT.

F.B.C.(HIGH VELOCITY HURRICANE ZONE)

PRODUCT RENEWED
as complying with the Florida Building Code
Acceptance No 10-0112.03
Expiration Date 05/19/2015
By Helena A. Martin
Miami Dade Product Control Division

**PRODUCT REVISED**
**as complying with the Florida Building Code**
**Acceptance No** 08-0408.01
**Expiration Date** 05/19/2010
By Helena A. Martin
Miami Dade Product Control Division
MIAMI−DADE COUNTY

MAR 28 2008
P.E. SEAL/SIGNATURE/DATE

©2008 TILTECO, INC

TILTECO INC.
TILLIT TESTING & ENGINEERING COMPANY
8355 N.W. 36th St., Ste. 305, VIRGINIA GARDENS, FL 33166
Phone : (305)871−1530 , Fax : (305)871−1531
EB−0006719
WALTER A. TILLIT Jr. P.E.
FLORIDA Lic. # 44167

16'−0" Max. WIDE IMPACT RESISTANT GABLED SKYLIGHT

**METCOE**
SKYLIGHT SPECIALTY CO., INC.
1715 WEST 135th STREET
GARDENA, CA. 90249
FLORIDA DISTRIBUTOR: SKYLIGHT CONCEPTS

| REV. No | DESCRIPTION | DATE | REV. No | DESCRIPTION | DATE |
|---|---|---|---|---|---|
| 1 | OLD 05−303 | 3/18/08 | 3 | | |
| 2 | ~ | − | 4 | | |

DRAWN BY: R.E.
3/18/08 DATE
08−073 DRAWING No
SHEET 1 OF 7

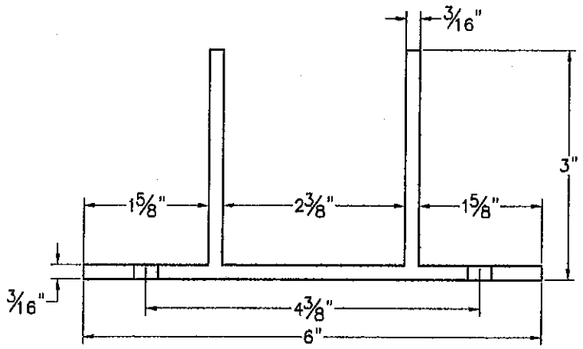


**BRACKET #116**

MIN. 3" LONG OR AS NEEDED BY DESIGN.
(SEE SHEET 4 OF 7 FOR DETAILS).
SEE NOTE 1A/1.

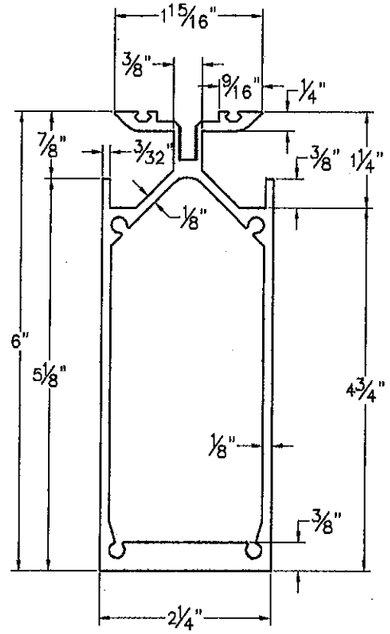


**RIDGE RAFTER #38**

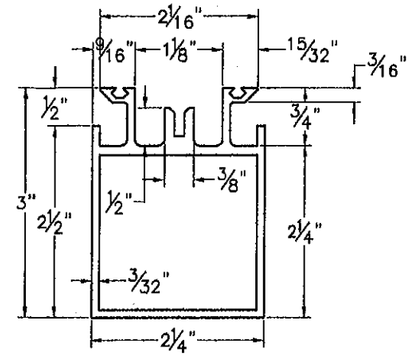


**X-MEMBER #118**

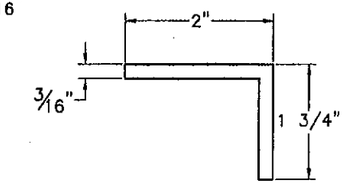


**ANGLE CLIP**

SCALE = 1/2"=1"

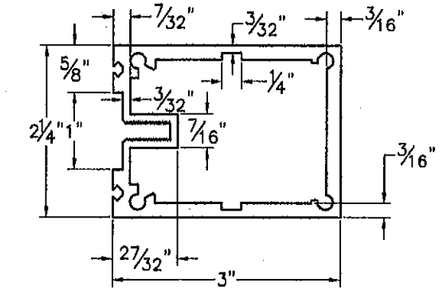


**MULLION POST #80**

SCALE = 1/2"=1"

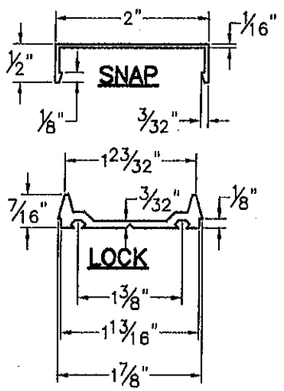


**#41A & B**
**ALUM. LOCK CAP &**
**ALUM. SNAP CAP.**

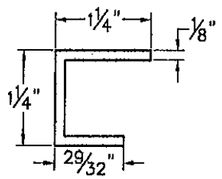


**SILL GLASS CAP**

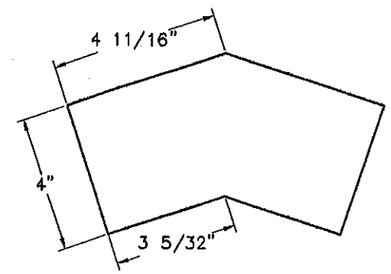


**1/4" ALUM PLATE**

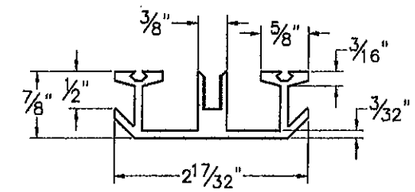


**X-MEMBER #14**

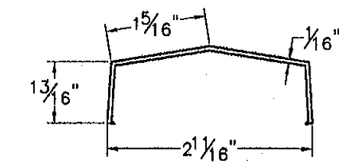


**ALUM COVER #124**

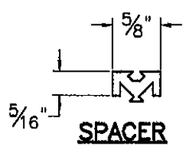


**SPACER**

EXTRUDED ALUM.

SCALE = 1"=1"

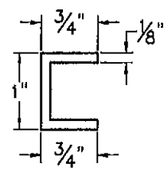


**SPACER**

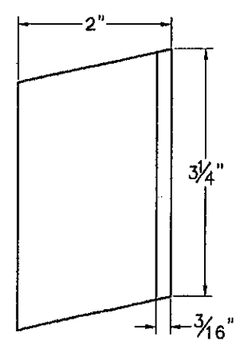


**ANGLE CLIP**

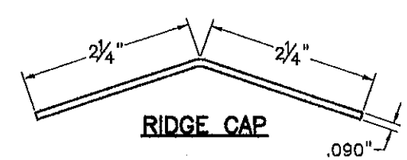


**RIDGE CAP**

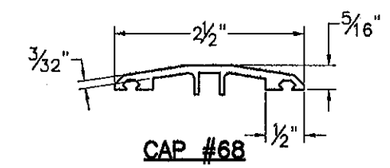


**CAP #68**

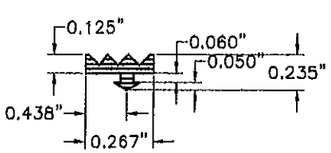


**GASKET**

SCALE = 1"=1"

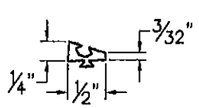


**PITCH ADJ**

EXTRUDED ALUM.

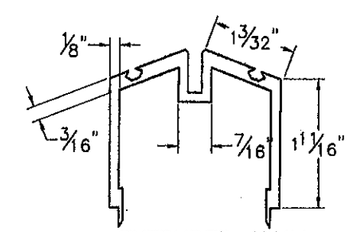


**EXTRUDED ALUM.**
**PITCH ADJUSTER #46**

# COMPONENTS

SCALE = 1/2"=1"

F.B.C.(HIGH VELOCITY HURRICANE ZONE)

PRODUCT RENEWED
as complying with the Florida
Building Code
Acceptance No 10-0112.03
Expiration Date 05/19/2015
By Helen A. Melon
Miami Dade Product Control
Division

PRODUCT REVISED
as complying with the Florida
Building Code
Acceptance No 08-0408.01
Expiration Date 05/19/2010
By Helen A. Melon
Miami Dade Product Control
Division
MIAMI-DADE COUNTY

MAR 28 2008

P.E. SEAL/SIGNATURE/DATE

©2008 TILTECO, INC

TILTECO INC.

TILLIT TESTING & ENGINEERING COMPANY
6355 N.W. 36th. St., Ste. 305, VIRGINIA GARDENS, FL 33166
Phone : (305)871-1530 , Fax : (305)871-1531
EB-0006719
WALTER A. TILLIT Jr. P.E.
FLORIDA Lic. # 44167

16'-0" Max. WIDE IMPACT RESISTANT
GABLED SKYLIGHT

**METCOE**
SKYLIGHT SPECIALTY CO., INC.
1715 WEST 135th STREET
GARDENA, CA. 90249
FLORIDA DISTRIBUTOR: SKYLIGHT CONCEPTS

| REV. No | DESCRIPTION | DATE | REV. No | DESCRIPTION | DATE |
|---|---|---|---|---|---|
| 1 | OLD 05-303 | 3/18/08 | 3 | | |
| 2 | – | – | 4 | | |

DRAWN BY: R.E.

3/18/08
DATE

08-073
DRAWING No

SHEET 2 OF 7

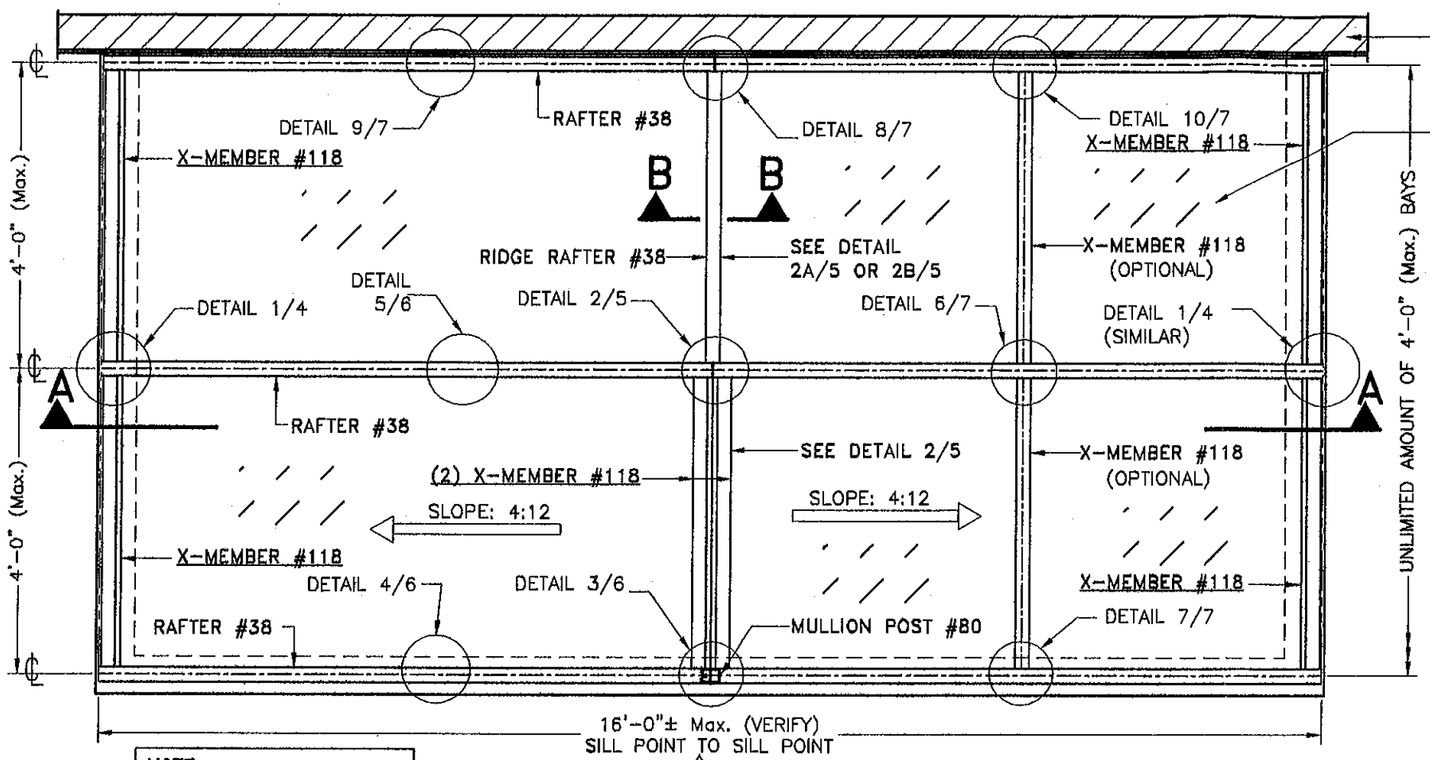


**NOTE:**
GLASS PANEL AREA SHALL NOT EXCEED 33.4 SQ. Ft

## GENERIC ROOF FRAMING PLAN
SCALE = 1/2"=1'-0"

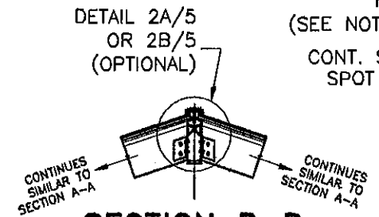


## SECTION B-B
SCALE = 1/2"=1'-0"

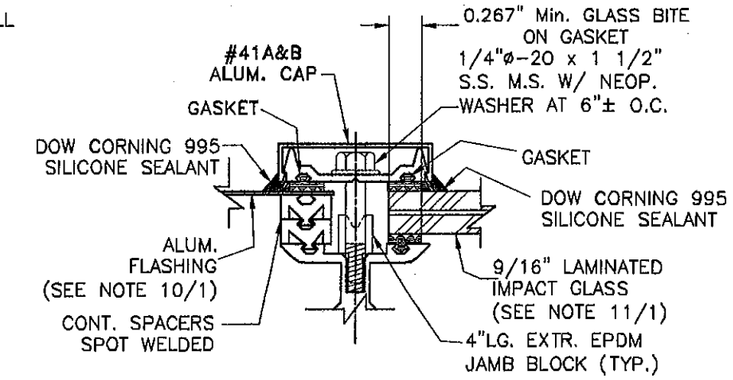


## GLAZING DETAIL @ RAFTER
SCALE = 1/2"=1"

(SEE SHEETS 4 THRU 7 OF 7 FOR ADDITIONAL GLAZING DETAILS AS APPLICABLE)

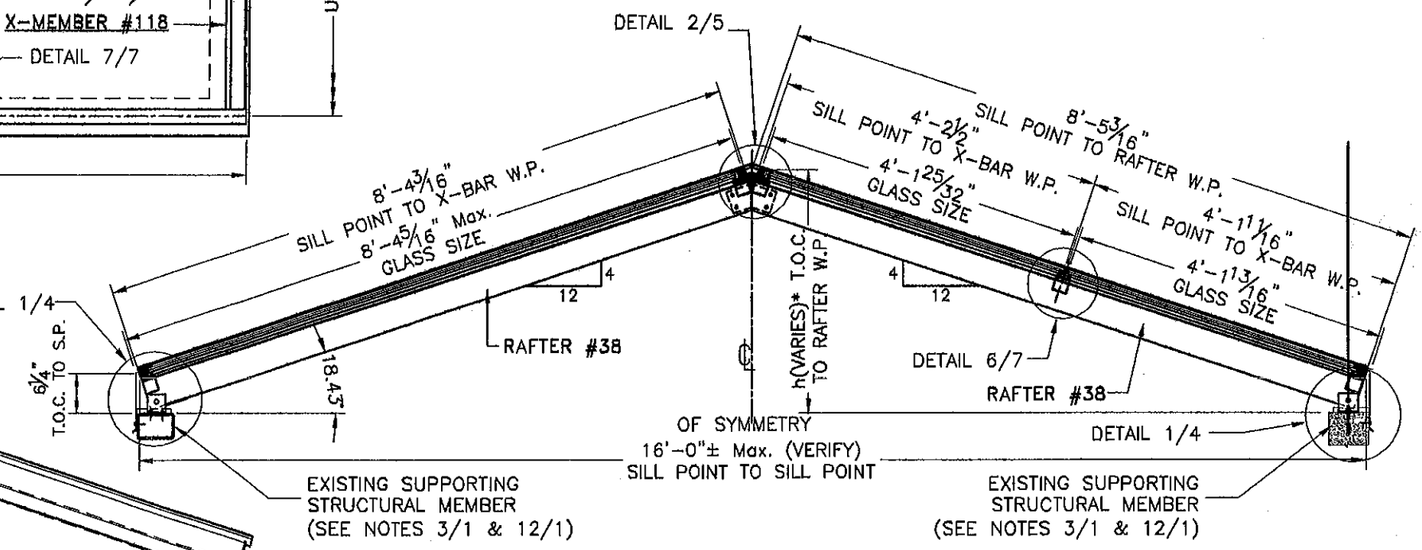


## SECTION A-A
SCALE = 1/2"=1'-0"

* h=3'-2 1/4" FOR 16'-0" Max. WIDE SKYLIGHT

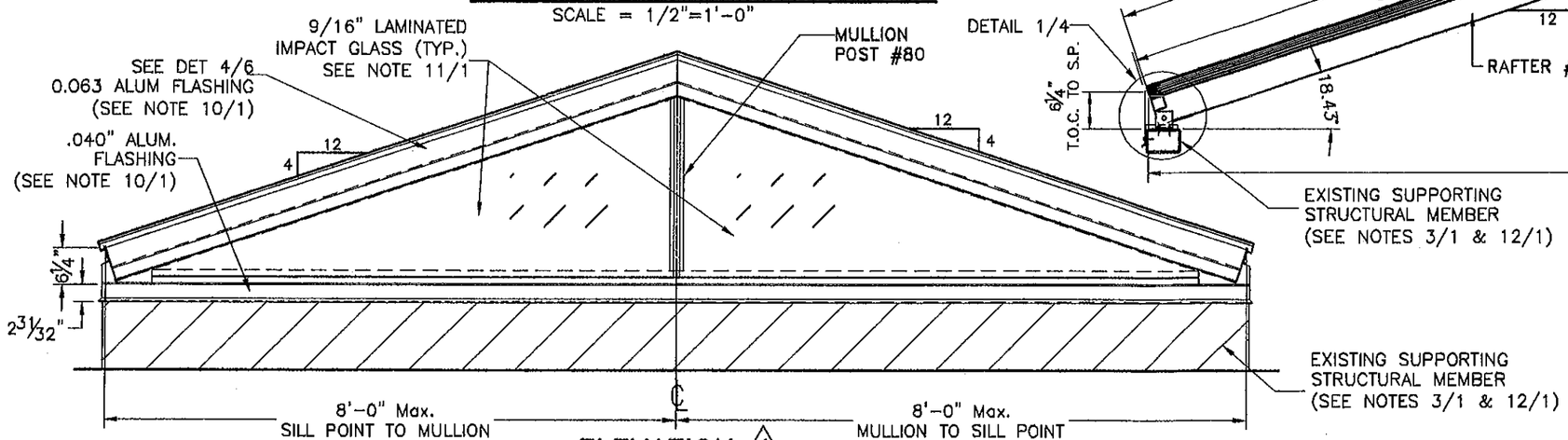


## ELEVATION 1
SCALE = 1/2"=1'-0"

F.B.C.(HIGH VELOCITY HURRICANE ZONE)

PRODUCT RENEWED
as complying with the Florida Building Code
Acceptance No 10-0112.03
Expiration Date 05/19/2015
By Helena A. Molina
Miami Dade Product Control Division

**PRODUCT REVISED**
**as complying with the Florida Buiding Code**
**Acceptance No** 08-0408.01
**Expiration Date** 05/19/2010
By Helena A. Molina
Miami Dade Product Control Division

MIAMI-DADE COUNTY

MAR 28 2008
P.E. SEAL/SIGNATURE/DATE

©2008 TILTECO, INC

TILTECO INC.
TILLIT TESTING & ENGINEERING COMPANY
6355 N.W. 36th. St., Ste. 306, VIRGINIA GARDENS, FL 33166
Phone : (305)871-1530 . Fax : (305)871-1531
EB-0006719
WALTER A. TILLIT Jr. P.E.
FLORIDA Lic. # 44167

16'-0" Max. WIDE IMPACT RESISTANT GABLED SKYLIGHT

**METCOE**
SKYLIGHT SPECIALTY CO., INC.
1715 WEST 135th STREET
GARDENA, CA. 90249
FLORIDA DISTRIBUTOR: SKYLIGHT CONCEPTS

| REV. No | DESCRIPTION | DATE | REV. No | DESCRIPTION | DATE |
|---|---|---|---|---|---|
| 1 | OLD 08-303 | 3/18/08 | 3 | | |
| 2 | -- | -- | 4 | | |

DRAWN BY: R.E.
3/18/08 DATE
08-073 DRAWING No
SHEET 3 OF 7

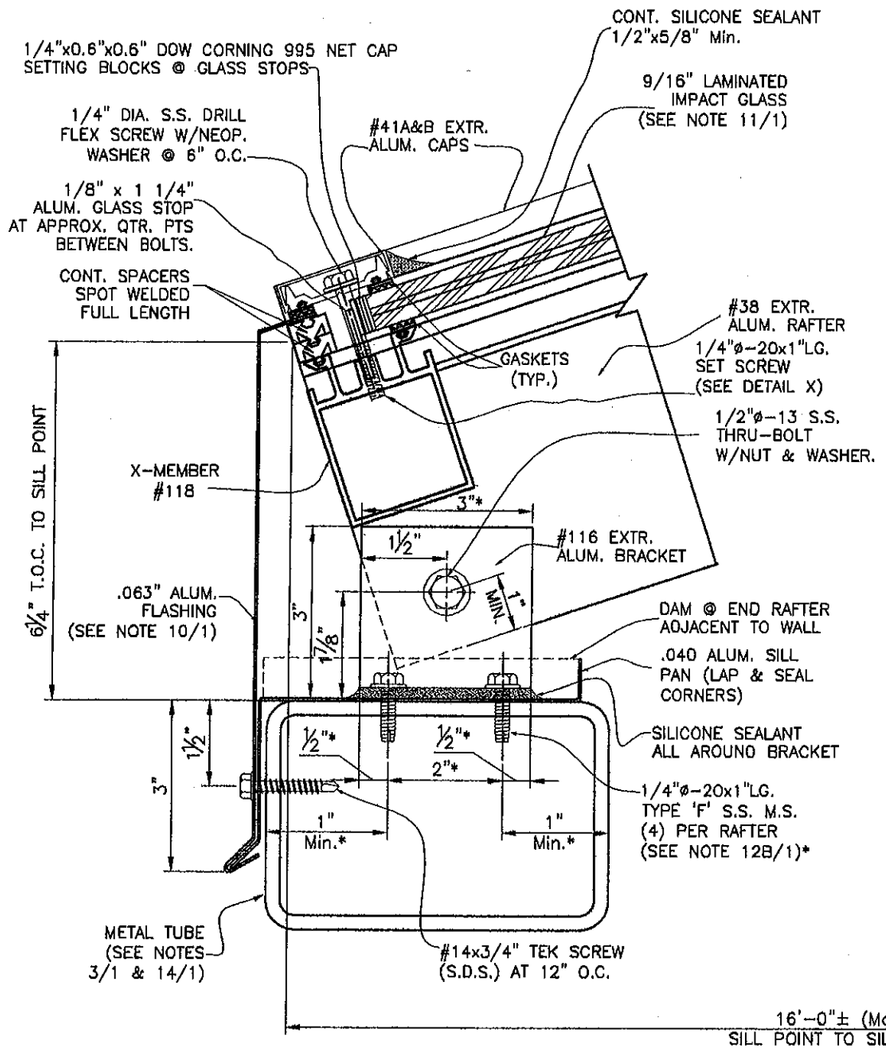


# DETAIL 1 TO METAL

SCALE = 3/8"=1"

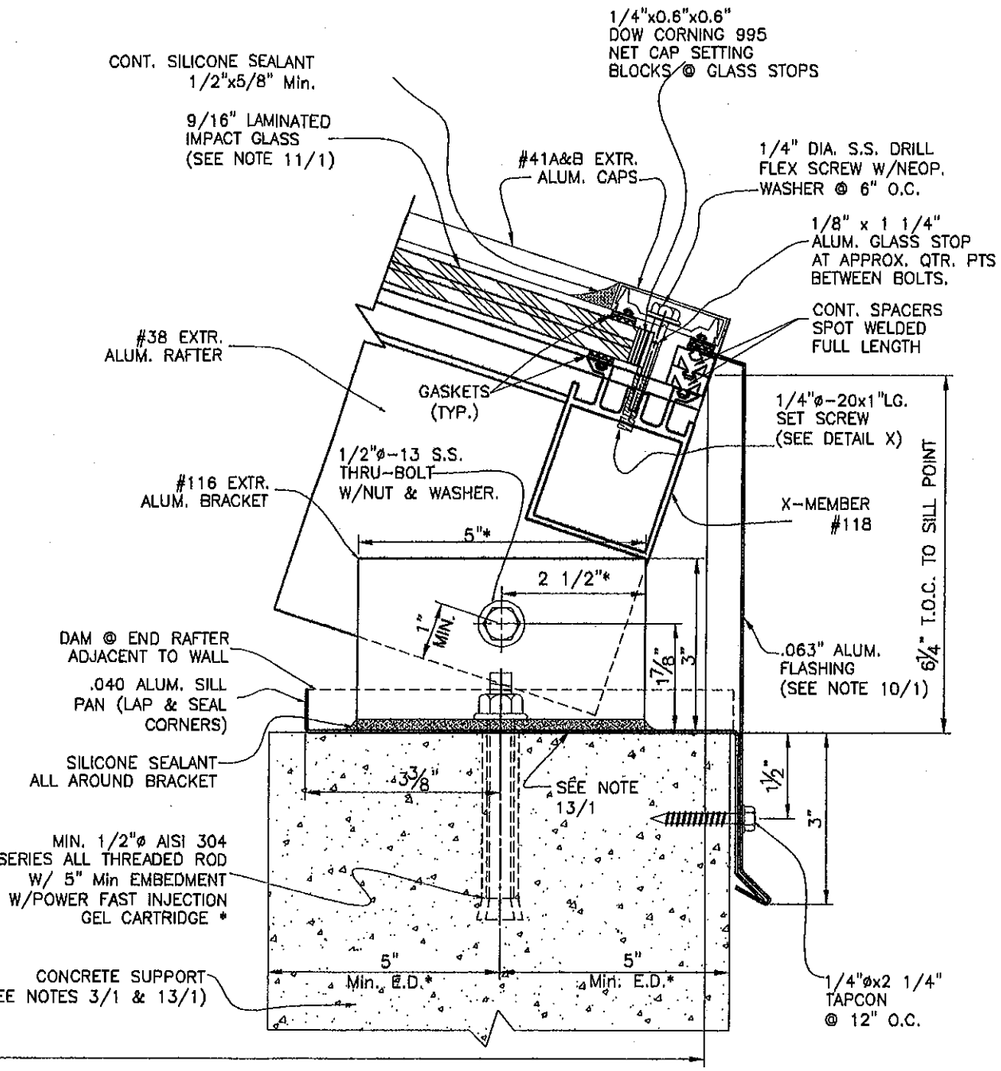


# DETAIL 1 TO CONCRETE

SCALE = 3/8"=1"

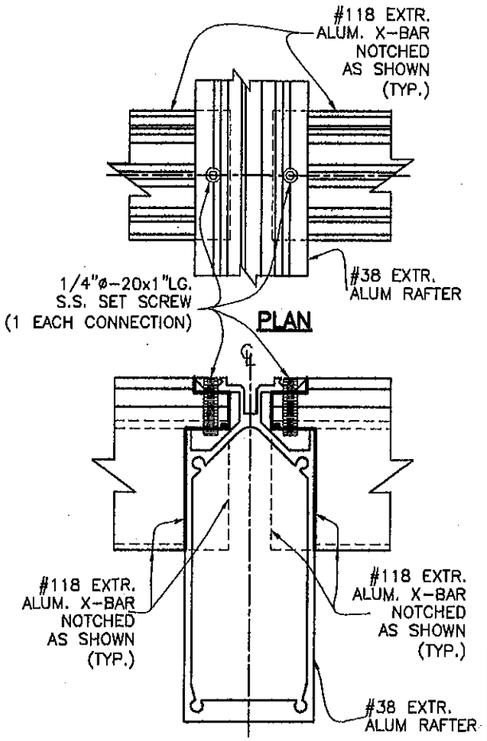


# DETAIL X

SCALE = 3/8"=1"

* THESE ANCHORS AND BRACKET LENGTHS ARE ONLY REQUIRED FOR ±75 psf. DESIGN LOAD AT ALL AREAS OF A 16' WIDE GABLE SKYLIGHT W/WALLS. ACTUAL ANCHOR TYPE, SIZE, EMBEDMENT AND EDGE DISTANCE AS WELL AS BRACKET LENGTH WILL VARY WITH EACH APPLICATION. SEE GENERAL NOTES 1 AND 1A ON SHEET 1.

F.B.C.(HIGH VELOCITY HURRICANE ZONE)

PRODUCT RENEWED
as complying with the Florida Building Code
Acceptance No 10.0122.03
Expiration Date 05/19/2015
By Helena A. Melo
Miami Dade Product Control Division

**PRODUCT REVISED**
**as complying with the Florida Building Code**
**Acceptance No** 08-0408.01
**Expiration Date** 05/19/2010
By Helena A. Melo
Miami Dade Product Control Division
MIAMI-DADE COUNTY

MAR 28 2008
P.E. SEAL/SIGNATURE/DATE

©2008 TILTECO, INC

TILTECO INC.
TILLIT TESTING & ENGINEERING COMPANY
6355 N.W. 36th. St., Ste. 305, VIRGINIA GARDENS, Fl. 33166
Phone : (305)871-1530 . Fax : (305)871-1531
EB-0006719
WALTER A. TILLIT Jr. P.E.
FLORIDA Lic. # 44167

16'-0" Max. WIDE IMPACT RESISTANT GABLED SKYLIGHT

**METCOE**
SKYLIGHT SPECIALTY CO., INC.
1715 WEST 135th STREET
GARDENA, CA. 90249
FLORIDA DISTRIBUTOR: SKYLIGHT CONCEPTS

| REV. No | DESCRIPTION | DATE | REV. No | DESCRIPTION | DATE |
|---|---|---|---|---|---|
| 1 | OLD 05-303 | 3/18/08 | 3 | | |
| 2 | - | - | 4 | | |

DRAWN BY: R.E.
3/18/08 DATE
08-073 DRAWING No
SHEET 4 OF 7

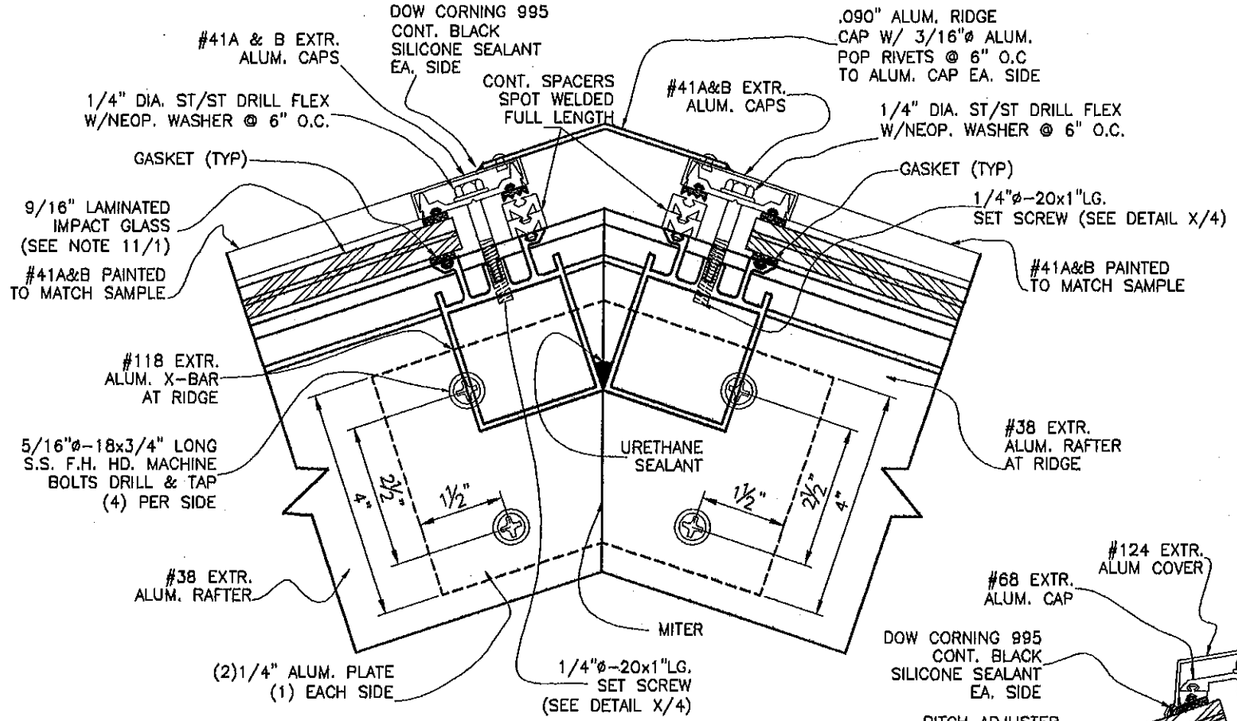


## DETAIL 2

SCALE = 3/8"=1"

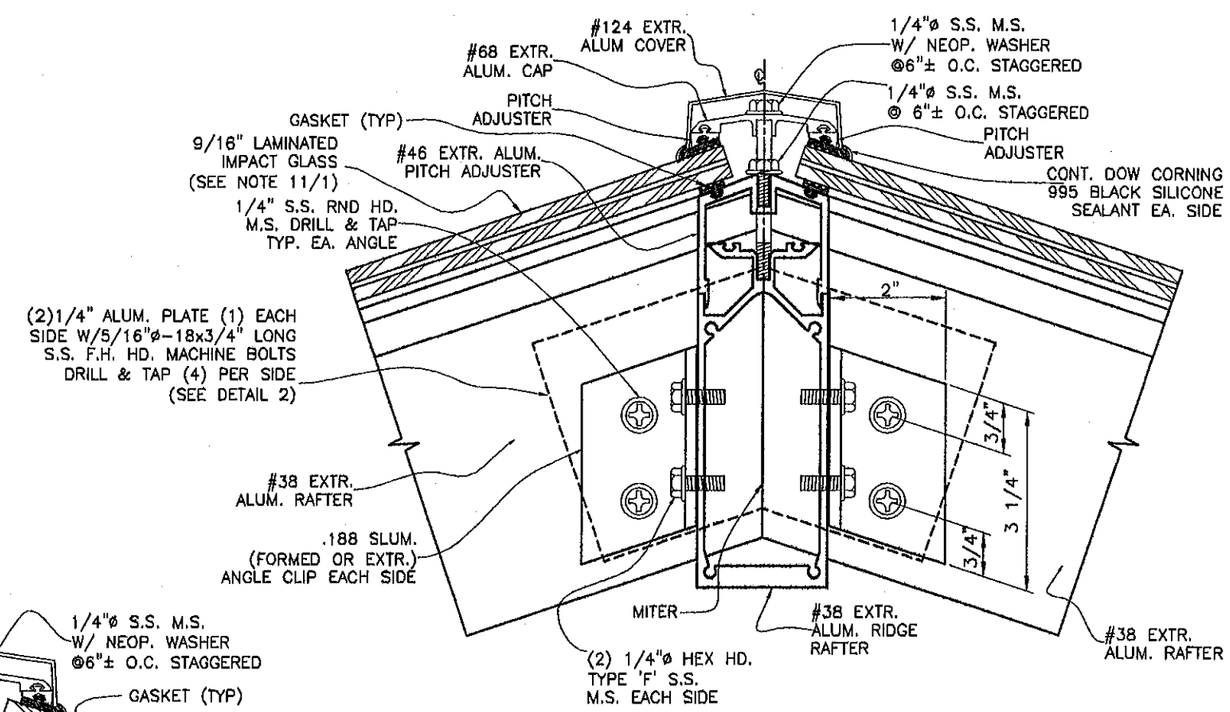


## DETAIL 2A

SCALE = 3/8"=1"

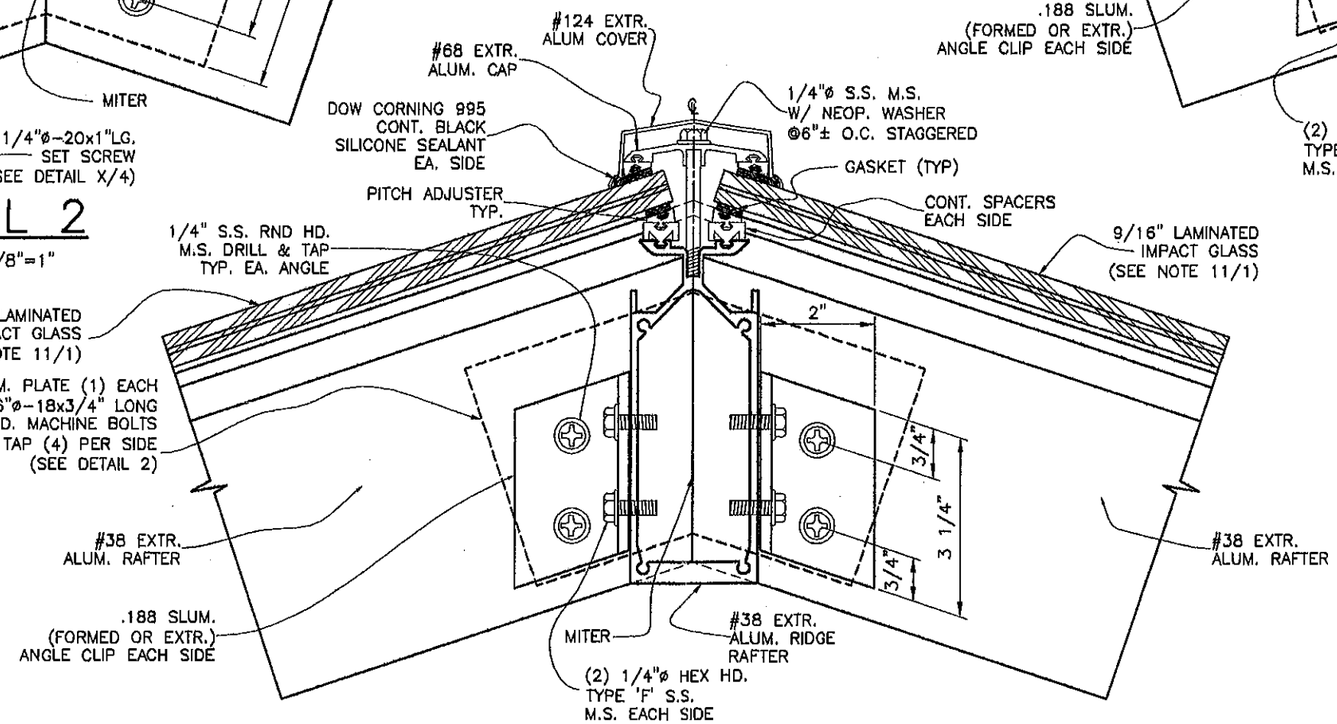


## DETAIL 2B

SCALE = 3/8"=1"

F.B.C.(HIGH VELOCITY HURRICANE ZONE)

PRODUCT RENEWED
as complying with the Florida Building Code
Acceptance No 0-0122.03
Expiration Date 05/19/2015
By Miami Dade Product Control Division

**PRODUCT REVISED**
**as complying with the Florida Building Code**
**Acceptance No 08-0408.01**
**Expiration Date 05/19/2010**
**By Miami Dade Product Control Division**
MIAMI-DADE COUNTY

MAR 28 2008
P.E. SEAL/SIGNATURE/DATE

©2008 TILTECO, INC

TILTECO INC.
TILLIT TESTING & ENGINEERING COMPANY
6355 N.W. 36th. St., Ste. 305, VIRGINIA GARDENS, Fl. 33166
Phone : (305)871-1530 . Fax : (305)871-1531
EB-0006719
WALTER A. TILLIT Jr. P.E.
FLORIDA Lic. # 44167

16'-0" Max. WIDE IMPACT RESISTANT GABLED SKYLIGHT

**METCOE**
SKYLIGHT SPECIALTY CO., INC.
1715 WEST 135th STREET
GARDENA, CA. 90249
FLORIDA DISTRIBUTOR: SKYLIGHT CONCEPTS

| REV. No | DESCRIPTION | DATE | REV. No | DESCRIPTION | DATE |
|---|---|---|---|---|---|
| 1 | OLD 05-303 | 3/18/08 | 3 | | |
| 2 | – | – | 4 | | |

DRAWN BY: R.E.
3/18/08 DATE
08-073 DRAWING No
SHEET 5 OF 7

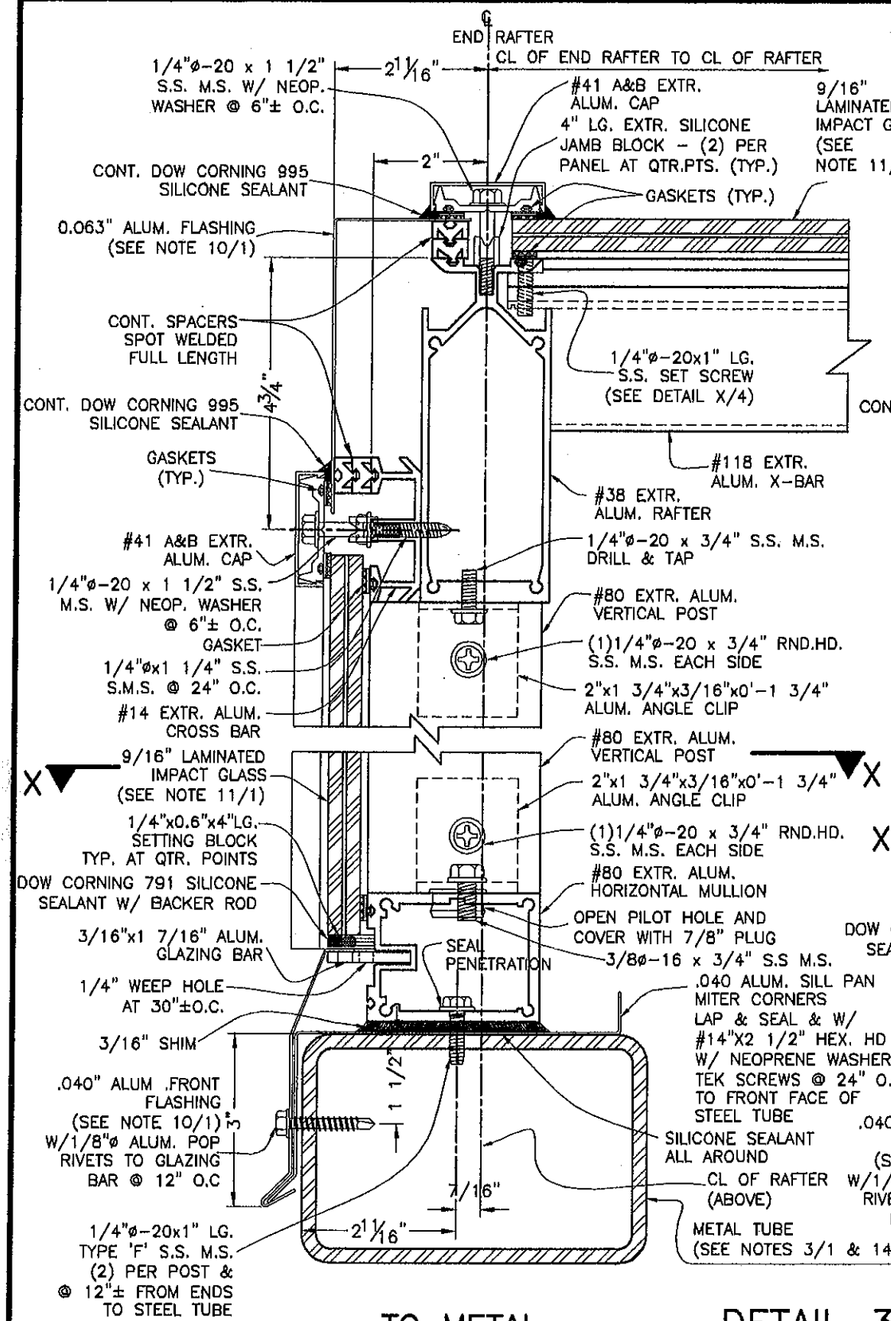


TO METAL

DETAIL 3
SCALE = 3/8"=1"

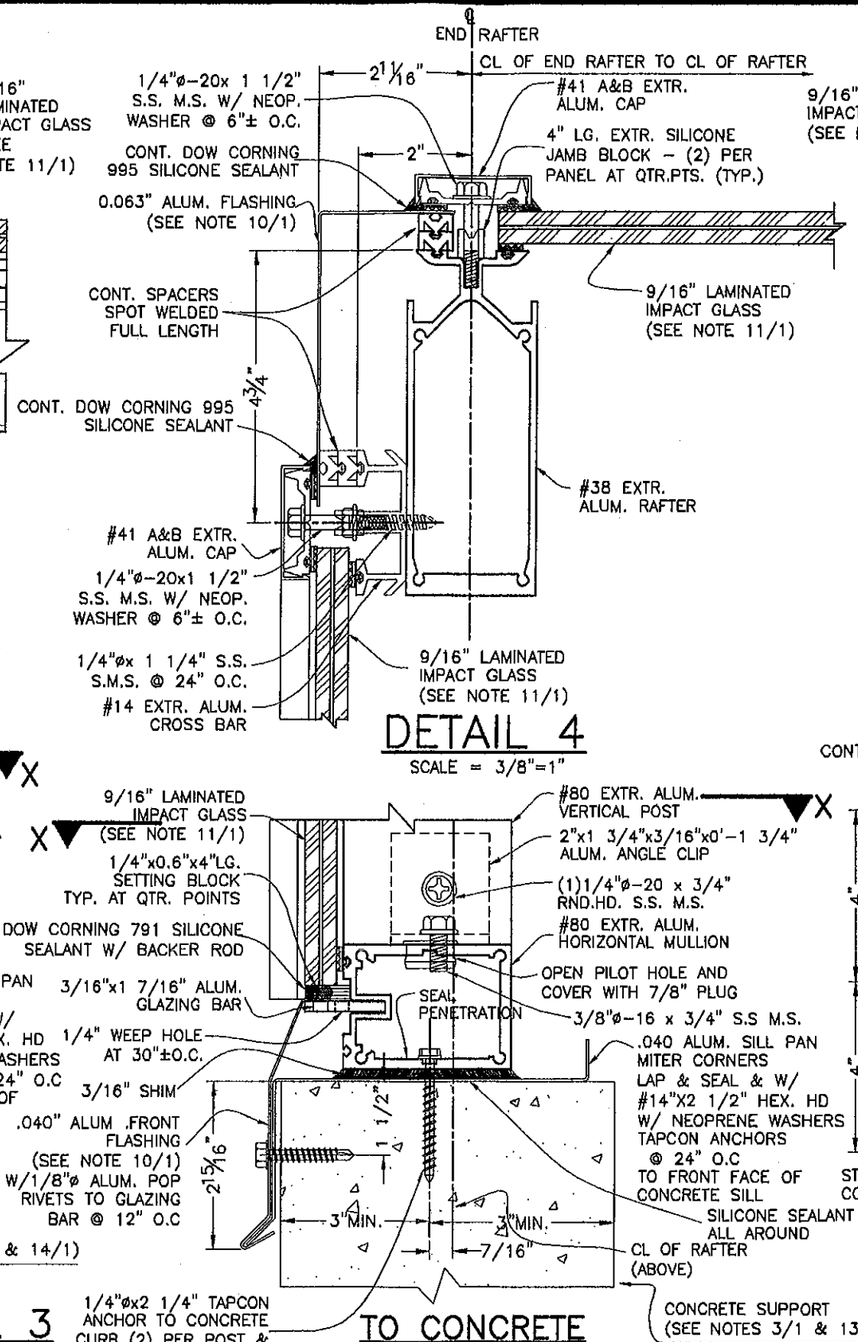


TO CONCRETE

DETAIL 4
SCALE = 3/8"=1"

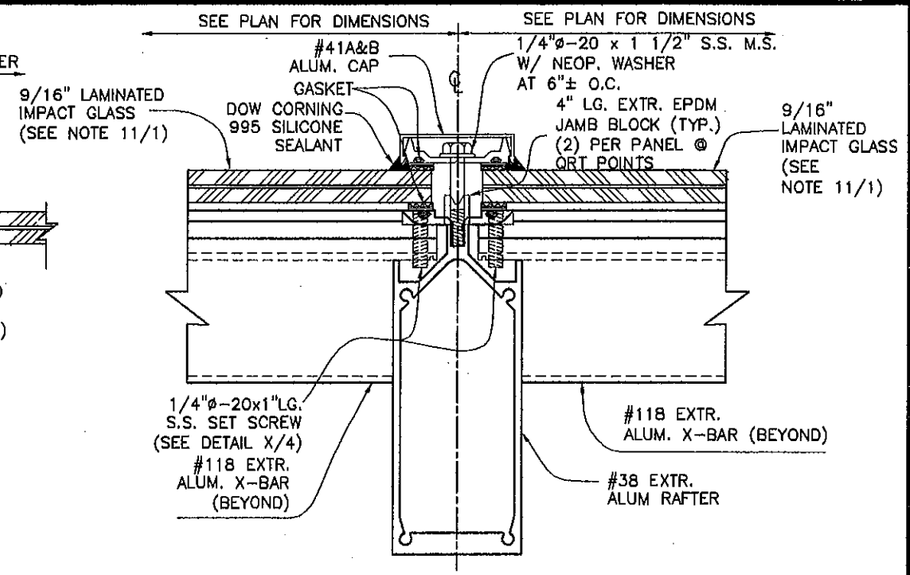


DETAIL 5
SCALE = 3/8"=1"

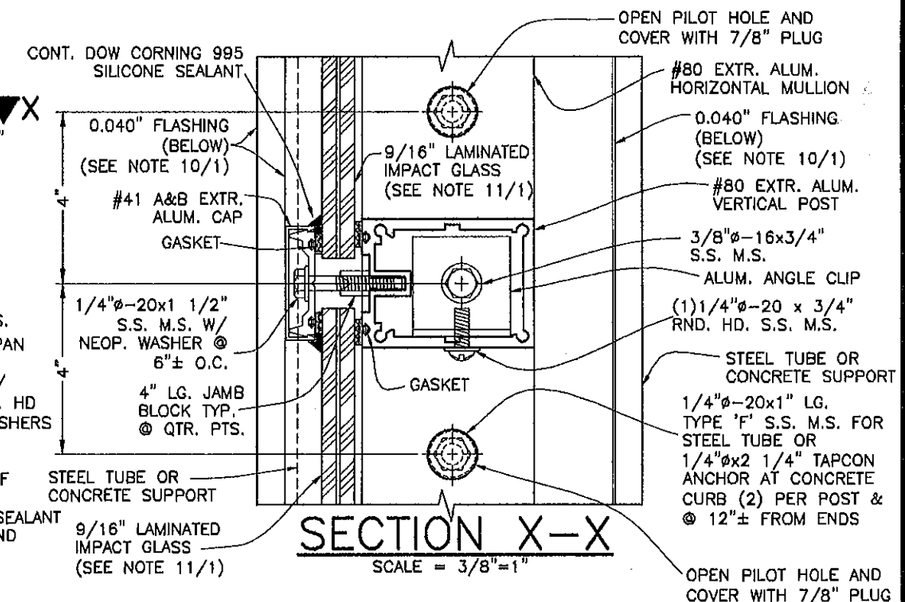


SECTION X-X
SCALE = 3/8"=1"

F.B.C.(HIGH VELOCITY HURRICANE ZONE)

PRODUCT RENEWED
as complying with the Florida Building Code
Acceptance No 0-0122.03
Expiration Date 05/19/2015
By Miami Dade Product Control Division

PRODUCT REVISED
as complying with the Florida Building Code
Acceptance No 08-0408.01
Expiration Date 05/19/2010
By Miami Dade Product Control Division

MIAMI-DADE COUNTY

MAR 28 2008
P.E. SEAL/SIGNATURE/DATE

©2008 TILTECO, INC

TILTECO INC.
TILLIT TESTING & ENGINEERING COMPANY
6355 N.W. 36th. St., Ste. 305, VIRGINIA GARDENS, Fl. 33166
Phone : (305)871-1530 . Fax : (305)871-1531
EB-0006719
WALTER A. TILLIT Jr. P.E.
FLORIDA Lic. # 44167

16'-0" Max. WIDE IMPACT RESISTANT GABLED SKYLIGHT

**METCOE**
SKYLIGHT SPECIALTY CO., INC.
1715 WEST 135th STREET
GARDENA, CA. 90249
FLORIDA DISTRIBUTOR: SKYLIGHT CONCEPTS

| REV. No | DESCRIPTION | DATE | REV. No | DESCRIPTION | DATE |
|---|---|---|---|---|---|
| 1 | OLD 05-303 | 3/18/08 | 3 | | |
| 2 | - | - | 4 | | |

DRAWN BY: R.E.
3/18/08 DATE
08-073 DRAWING No
SHEET 6 OF 7

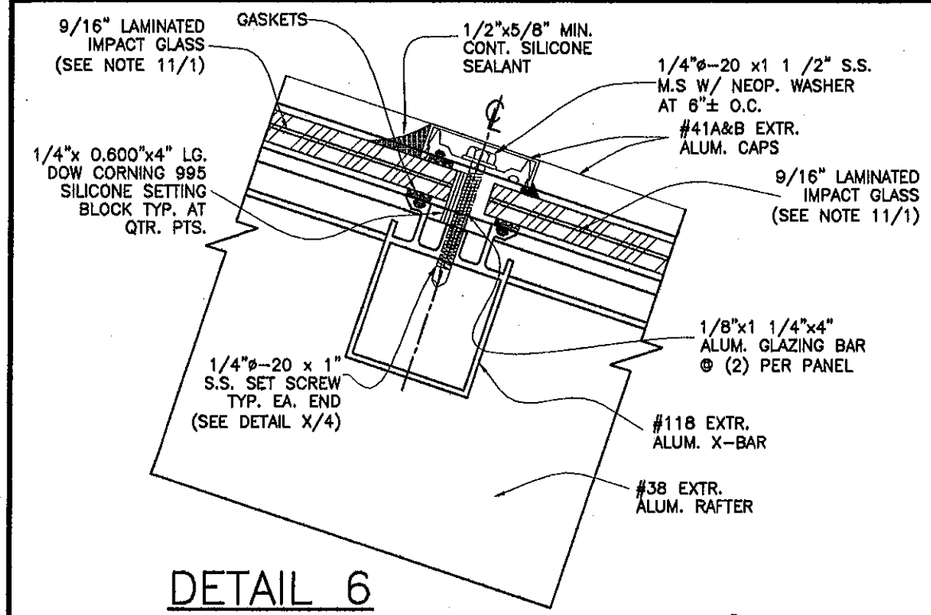


## DETAIL 6

SCALE = 3/8"=1"

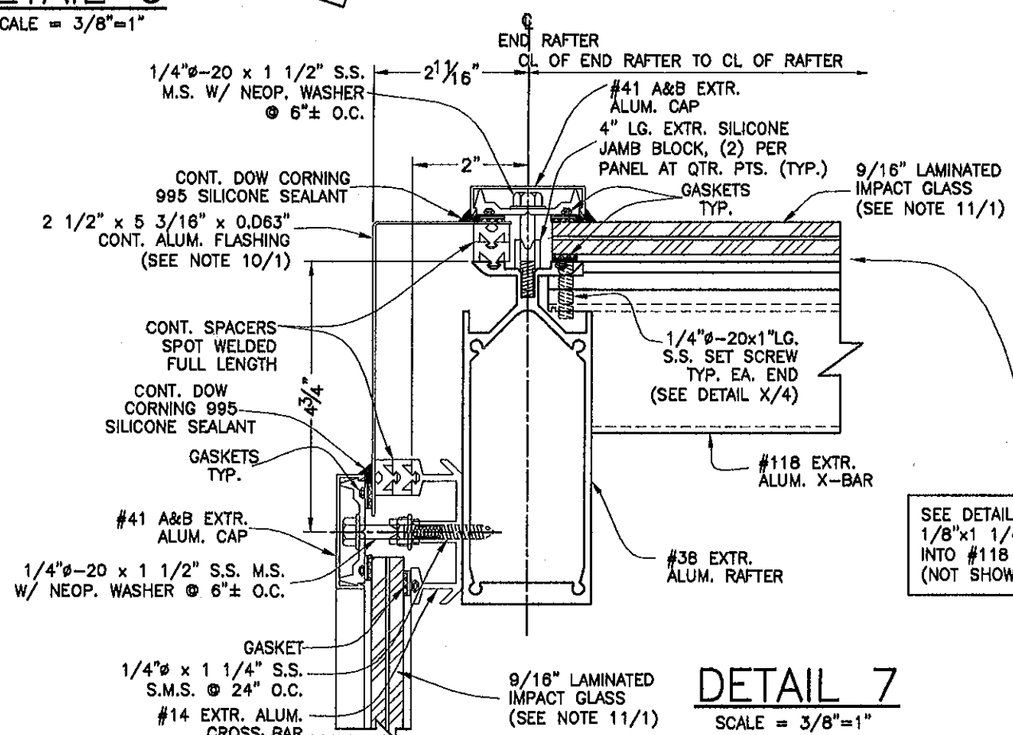


SEE DETAIL 6 FOR INSTALLATION OF 1/8"x1 1/4" ALUM. GLAZING BAR INTO #118 EXTR. ALUM. X-BAR (NOT SHOWN HERE FOR CLARITY).

## DETAIL 7

SCALE = 3/8"=1"

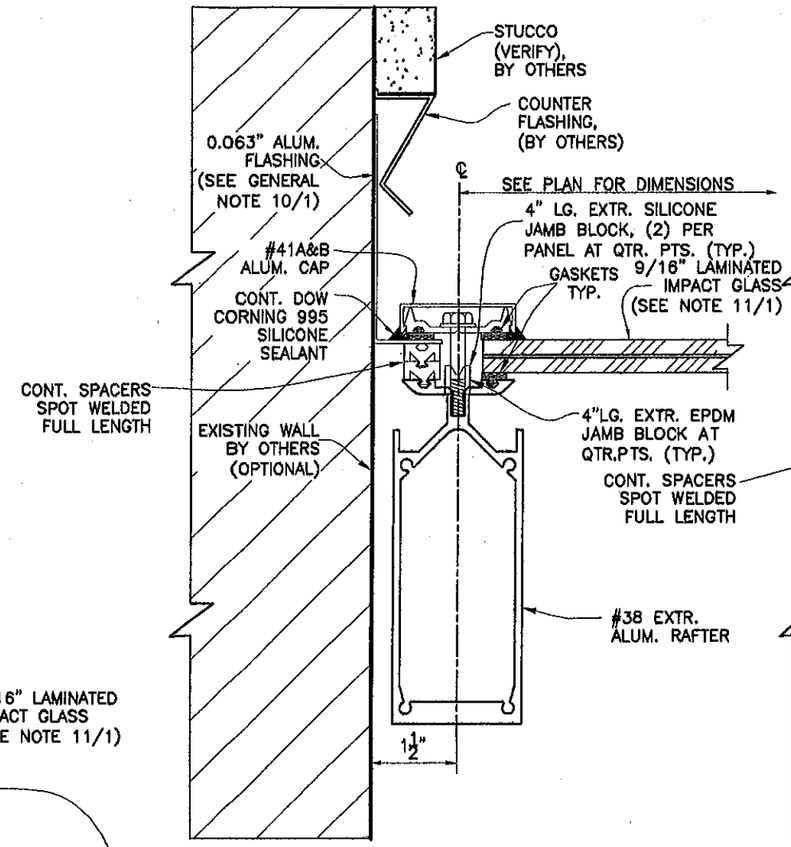


## DETAIL 9

SCALE = 3/8"=1"

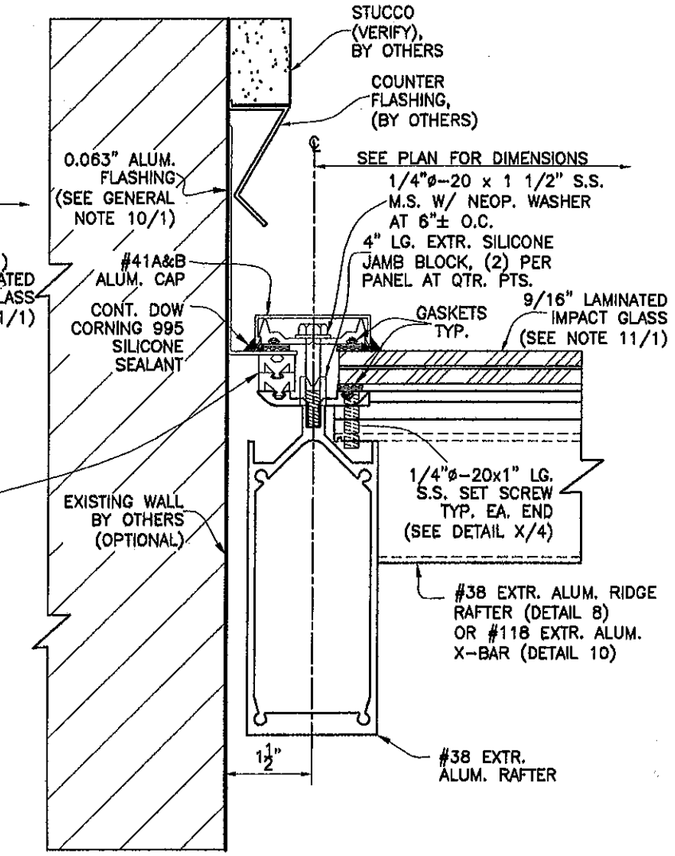


## DETAILS 8 & 10

SCALE = 3/8"=1"

F.B.C.(HIGH VELOCITY HURRICANE ZONE)

PRODUCT CONTROL SECTION
COMPLIANCE DEVELOPMENT
DADE COUNTY
RECEIVED
MAR 4 - 08 AM 8:30

PRODUCT RENEWED
as complying with the Florida Building Code
Acceptance No 10-0122.03
Expiration Date 05/19/2015
By Helena A. Molina
Miami Dade Product Control Division

**PRODUCT REVISED**
**as complying with the Florida Building Code**
Acceptance No 08-0408.01
Expiration Date 05/19/2010
By Helena A. Molina
Miami Dade Product Control Division
MIAMI-DADE COUNTY

MAR 28 2008
P.E. SEAL/SIGNATURE/DATE

©2008 TILTECO, INC

TILTECO INC.
TILLIT TESTING & ENGINEERING COMPANY
6355 N.W. 36th. St., Ste. 305, VIRGINIA GARDENS, FL. 33166
Phone : (305)871-1530 . Fax : (305)871-1531
EB-0006719
WALTER A. TILLIT Jr. P.E.
FLORIDA Lic. # 44167

16'-0" Max. WIDE IMPACT RESISTANT GABLED SKYLIGHT

**METCOE**
SKYLIGHT SPECIALTY CO., INC.
1715 WEST 135th STREET
GARDENA, CA. 90249
FLORIDA DISTRIBUTOR: SKYLIGHT CONCEPTS

| REV. No | DESCRIPTION | DATE | REV. No | DESCRIPTION | DATE |
|---|---|---|---|---|---|
| 1 | OLD 08-303 | 3/18/08 | 3 | | |
| 2 | - | - | 4 | | |

DRAWN BY: R.E.
3/18/08 DATE
08-073 DRAWING No
SHEET 7 OF 7