MIAMI-DADE COUNTY
BUILDING CODE COMPLIANCE OFFICE (BCCO)
PRODUCT CONTROL DIVISION

MIAMI-DADE COUNTY, FLORIDA
METRO-DADE FLAGLER BUILDING
140 WEST FLAGLER STREET, SUITE 1603
MIAMI, FLORIDA 33130-1563
(305) 375-2901 FAX (305) 372-6339
www.miamidade.gov/buildingcode

NOTICE OF ACCEPTANCE (NOA)

Miami Wall Systems, Inc.
701 West 25th Street
Hialeah, FL 33010

SCOPE:
This NOA is being issued under the applicable rules and regulations governing the use of construction materials. The documentation submitted has been reviewed by Miami-Dade County Product Control Division and accepted by the Board of Rules and Appeals (BORA) to be used in Miami Dade County and other areas where allowed by the Authority Having Jurisdiction (AHJ).
This NOA shall not be valid after the expiration date stated below. The Miami-Dade County Product Control Division (In Miami Dade County) and/or the AHJ (in areas other than Miami Dade County) reserve the right to have this product or material tested for quality assurance purposes. If this product or material fails to perform in the accepted manner, the manufacturer will incur the expense of such testing and the AHJ may immediately revoke, modify, or suspend the use of such product or material within their jurisdiction. BORA reserves the right to revoke this acceptance, if it is determined by Miami-Dade County Product Control Division that this product or material fails to meet the requirements of the applicable building code. This product is approved as described herein, and has been designed to comply with the Florida Building Code, including the High Velocity Hurricane Zone.

DESCRIPTION: Series 106 Aluminum Horizontal Sliding Window – S. M. I.

APPROVAL DOCUMENT: Drawing No. **NOA 106 SM**, titled "Horiz Rolling Window Series 106", sheets 1 through 7 of 7, dated 12/18/09, prepared by manufacturer, signed and sealed by Jorge E. Valdes, P.E., bearing the Miami-Dade County Product Control Revision stamp with the Notice of Acceptance number and expiration date by the Miami-Dade County Product Control Division.

MISSILE IMPACT RATING: Small Missile Impact Resistant

LABELING: Each unit shall bear a permanent label with the manufacturer's name or logo, city, state and following statement: "Miami-Dade County Product Control Approved", unless otherwise noted herein.

RENEWAL of this NOA shall be considered after a renewal application has been filed and there has been no change in the applicable building code negatively affecting the performance of this product.

TERMINATION of this NOA will occur after the expiration date or if there has been a revision or change in the materials, use, and/or manufacture of the product or process. Misuse of this NOA as an endorsement of any product, for sales, advertising or any other purposes shall automatically terminate this NOA. Failure to comply with any section of this NOA shall be cause for termination and removal of NOA.

ADVERTISEMENT: The NOA number preceded by the words Miami-Dade County, Florida, and followed by the expiration date may be displayed in advertising literature. If any portion of the NOA is displayed, then it shall be done in its entirety.

INSPECTION: A copy of this entire NOA shall be provided to the user by the manufacturer or its distributors and shall be available for inspection at the job site at the request of the Building Official.
This NOA **revises and renews NOA # 04-1215.03** and consists of this page 1 and evidence pages E-1 and E-2, as well as approval document mentioned above.
The submitted documentation was reviewed by **Manuel Perez, P.E.**

MIAMI-DADE COUNTY APPROVED

Miami Wall Systems, Inc.

NOTICE OF ACCEPTANCE: EVIDENCE SUBMITTED

A. DRAWINGS

1. Manufacturer's die drawings and sections.
2. Drawing No **NOA 106 SM**, Sheets 1 through 7 of 7, titled "Horiz Rolling Window Series 106" dated 12/18/09, signed and sealed by Jorge E. Valdes, P.E.

B. TESTS

1. Test reports on: 1) Uniform Static Air Pressure Test, Loading per FBC, TAS 202-94
   2) Small Missile Impact Test per FBC, TAS 201-94
   3) Cyclic Wind Pressure Loading per FBC, TAS 203-94

   along with installation diagram and marked-up drawings of an aluminum horizontal sliding window, prepared by Fenestration Testing Laboratory, Inc., Test Report No. **FTL-4358**, dated 11/12/04, signed and sealed by Edmundo Largaespada, P.E. ***(Submitted under previous NOA #04-1215.03)***
2. Test reports on: 1) Air Infiltration Test, per FBC, TAS 202-94
   2) Uniform Static Air Pressure Test, Loading per FBC, TAS 202-94
   3) Water Resistance Test, per FBC, TAS 202-94
   4) Small Missile Impact Test per FBC, TAS 201-94
   5) Cyclic Wind Pressure Loading per FBC, TAS 203-94
   6) Forced Entry Test, per FBC 2411 3.2.1 (b) and TAS 202-94

   along with installation diagram and marked-up drawings of an aluminum horizontal sliding window, prepared by Fenestration Testing Laboratory, Inc., Test Report No. **FTL-4386**, dated 11/12/04, signed and sealed by Edmundo Largaespada, P.E. ***(Submitted under previous NOA #04-1215.03)***

C. CALCULATIONS

1. Anchor verification calculations and structural analysis, complying with FBC-2007, prepared by manufacturer, dated 01/06/10, signed and sealed by Jorge E. Valdes, P.E. **Complies with ASTM E1300-02/04**

D. QUALITY ASSURANCE

1. Miami Dade Building Code Compliance Office (BCCO).

E. MATERIAL CERTIFICATIONS

1. Notice of Acceptance No. **05-1208.02** issued to **E.I. DuPont DeNemours & Co.**, Inc. for their "**DuPont Butacite PVB Interlayer**" dated 01/05/06, expiring on 12/11/10.

Manuel Perez, P.E.
Product Control Examiner
NOA No. 10-0114.03
Expiration Date: February 03, 2015
Approval Date: April 21, 2010

NOTICE OF ACCEPTANCE: EVIDENCE SUBMITTED

F. STATEMENTS

1. Statement letter of conformance, dated December 18, 2009, signed and sealed by Jorge E. Valdes, P.E.
2. Statement letter of no financial interest, dated December 18, 2009, signed and sealed by Jorge E. Valdes, P.E.
3. Laboratory compliance letter for Test Report No. **FTL-4358**, issued by Fenestration Testing Laboratory, Inc., dated December 1, 2004, signed and sealed by Edmundo Largaespada, P.E.
4. Laboratory compliance letter for Test Report No. **FTL-4386**, issued by Fenestration Testing Laboratory, Inc., dated December 6, 2004, signed and sealed by Edmundo Largaespada, P.E.

G. OTHER

1. Notice of Acceptance No. **04-1215.03**, issued to Miami Wall Systems, Inc. for their Series 106 Aluminum Horizontal Sliding Window, approved on 02/03/05 and expiring on 02/03/10.

Manuel Perez, P.E.
Product Control Examiner
NOA No. 10-0114.03
Expiration Date: February 03, 2015
Approval Date: April 21, 2010

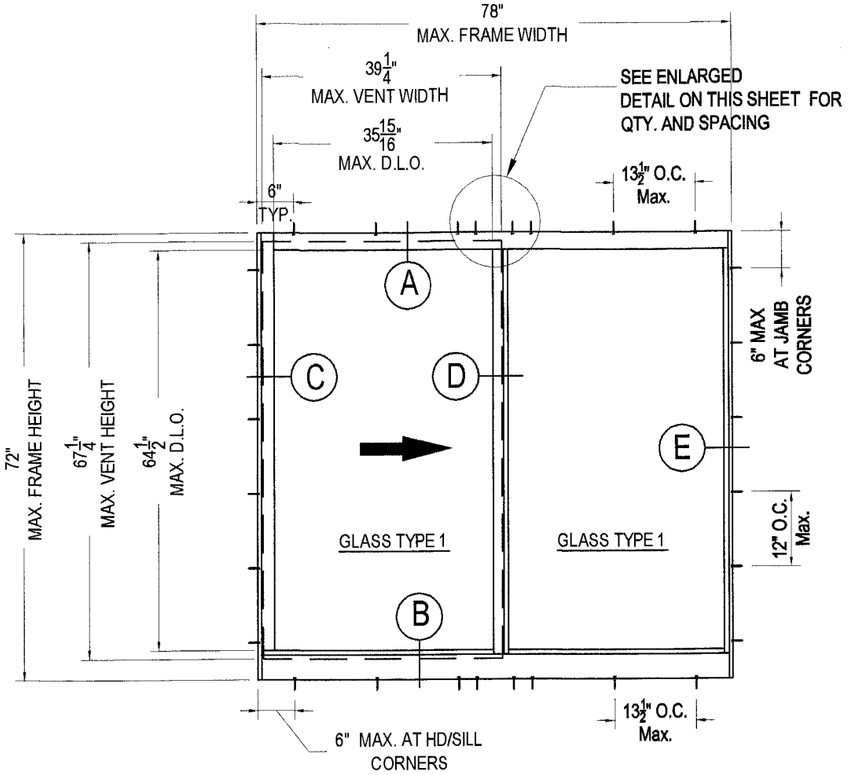

SERIES 106 ALUMINUM HORIZONTAL ROLLING WINDOW
TYPICAL ELEVATION

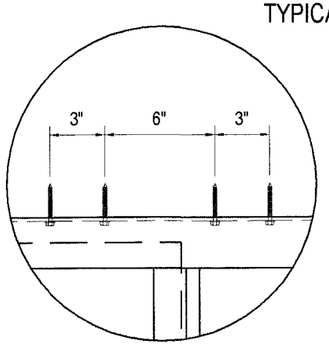

CLUSTER OF FASTENERS AT INTERLOCK DETAIL.
TYP AT HEAD & SILL. SEE SCHEDULE ON SHEET 5
FOR ANCHOR TYPES

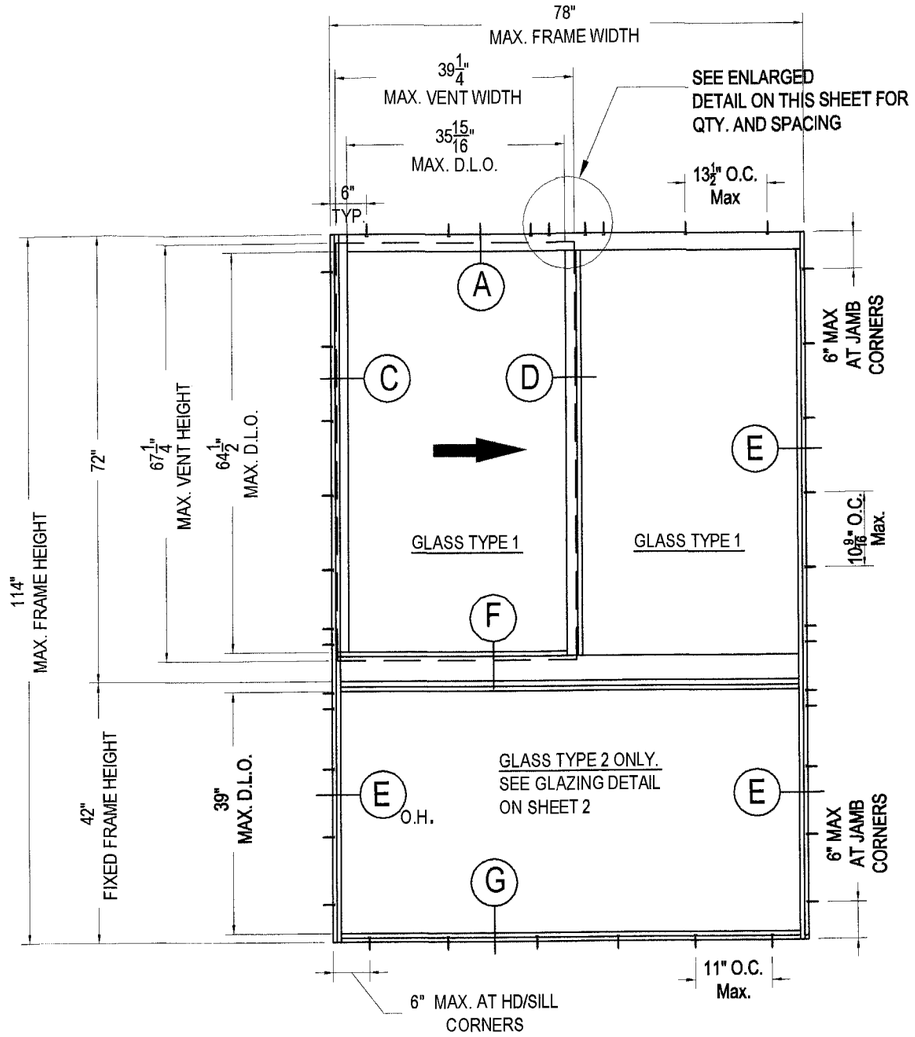

SERIES 106 HORIZONTAL ROLLING WINDOW OVER FIXED WINDOW
TYPICAL ELEVATION

GENERAL NOTES:

1. HIS PRODUCT HAS BEEN DESIGNED & TESTED IN ACCORDANCE WITH THE 2007 FLORIDA BUILDING CODE (HIGH VELOCITY HURRICANE ZONE)
2. FRAME HEAD AND SILL USE SAME FASTENER SPACING.
3. SMALL MISSILE MISSILE IMPACT (SMI): UNIT REQUIRED TO BE INSTALLED ABOVE 30 FT ABOVE THE GRADE.
4. SHUTTERS ARE NOT REQUIRED.
5. XO & OX WINDOW CONFIGURATIONS ARE ACCEPTABLE.
6. SEE TABLE ON SHEET 5 FOR ANCHORAGE OPTIONS AND SPACING.
7. SEE SHEET 4 FOR ACCEPTABLE GLASS TYPES AND GLAZING DETAILS.
8. STEEL REINFORCEMENT AT MEETING RAIL IS REQUIRED AT UNITS TALLER THAN 64" HIGH.

PRODUCT REVISED
as complying with the Florida
Building Code
Acceptance No. 10-0114.03
Expiration Date FEB. 3, 2015
By Manuel Perez
Miami-Dade Product Control
Division

Jorge E. Valdes
Fla. PE# 67398
C.A.N. 28565

JAN 14 2010

Miami Wall Systems, Inc.
701 West 25th Street
Hialeah, Florida. 33010
Phone:(305) 888-2300 Fax:(305) 888-3058

HORIZ ROLLING WINDOW SERIES 106

ELEVATIONS
GENERAL NOTES

NO.	DATE	REVISION

DATE: 12/18/2009
SCALE: AS NOTED
DWG. BY: L.R.A
CHK. BY: JV
DWG NO.: NOA 106 SM
SHEET 1 OF 7

SLIDING WINDOW DIMENSIONS (INCHES)		ALLOWABLE LOAD CAPACITY GLASS TYPE 1 (p.s.f.)	
WIDTH	HEIGHT	MEETING RAIL TYPE	
		STANDARD	REINFORCED
54	48	±90	±90
60		±90	±90
66		±90	±90
72		±90	±90
78		±90	±90
54	56	±90	±90
60		±90	±90
66		±90	±90
72		±90	±90
78		±90	±90
54	64	±90	±90
60		±90	±90
66		±90	±90
72		±90	±90
78		±90	±90
54	72	-	±90
60		-	±90
66		-	±90
72		-	±90
78		-	±90

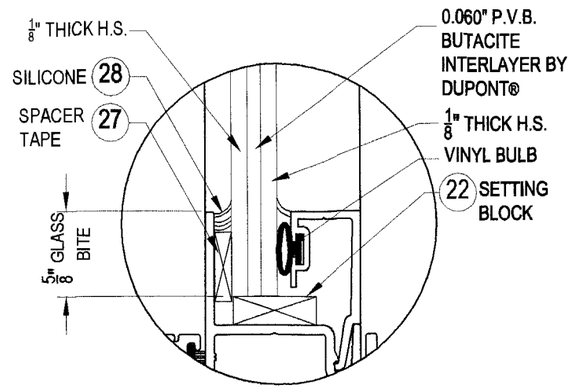

GLASS TYPE 1
TYP. AT SLIDING WINDOW

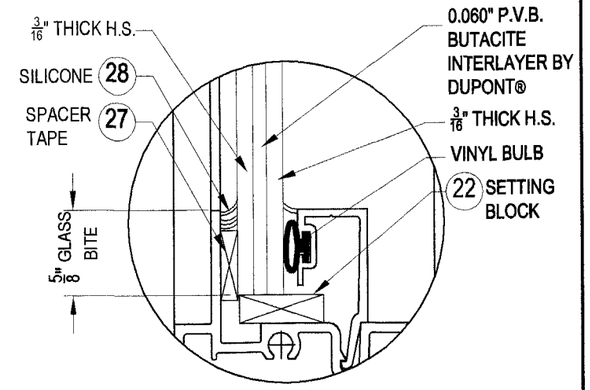

GLASS TYPE 2
TYP. AT FIXED WINDOW
BELOW SLIDING WINDOW

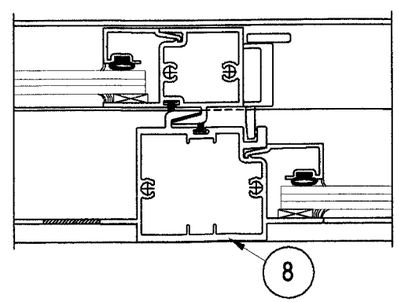

STANDARD MEETING RAIL DETAIL

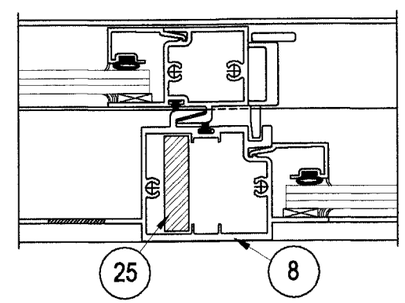

REINFORCED MEETING RAIL DETAIL

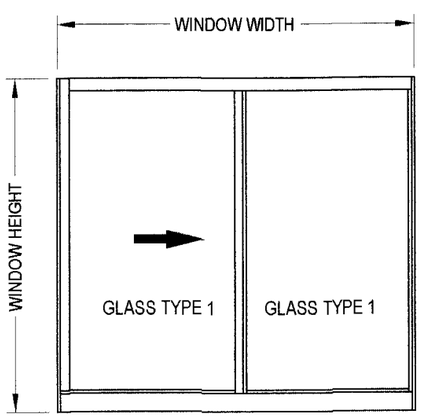

PRODUCT REVISED
as complying with the Florida Building Code
Acceptance No. 10-0114.03
Expiration Date FEB. 3, 2015
By Manuel Perez
Miami Dade Product Control Division

Jorge E. Valdes
Fla. PE# 67398
C.A.N. 28565

JAN 11 2010

Miami Wall Systems, Inc.
701 West 25th Street
Hialeah, Florida. 33010
Phone:(305) 888-2300 Fax:(305) 888-3058

HORIZ ROLLING WINDOW SERIES 106

LOAD CHART & GLAZING DETAILS

NO.	DATE	REVISION

DATE: 12/18/2009
SCALE: AS NOTED
DWG. BY: L.R.A
CHK. BY: JV
DWG NO.: NOA 106 SM
SHEET 2 OF 7

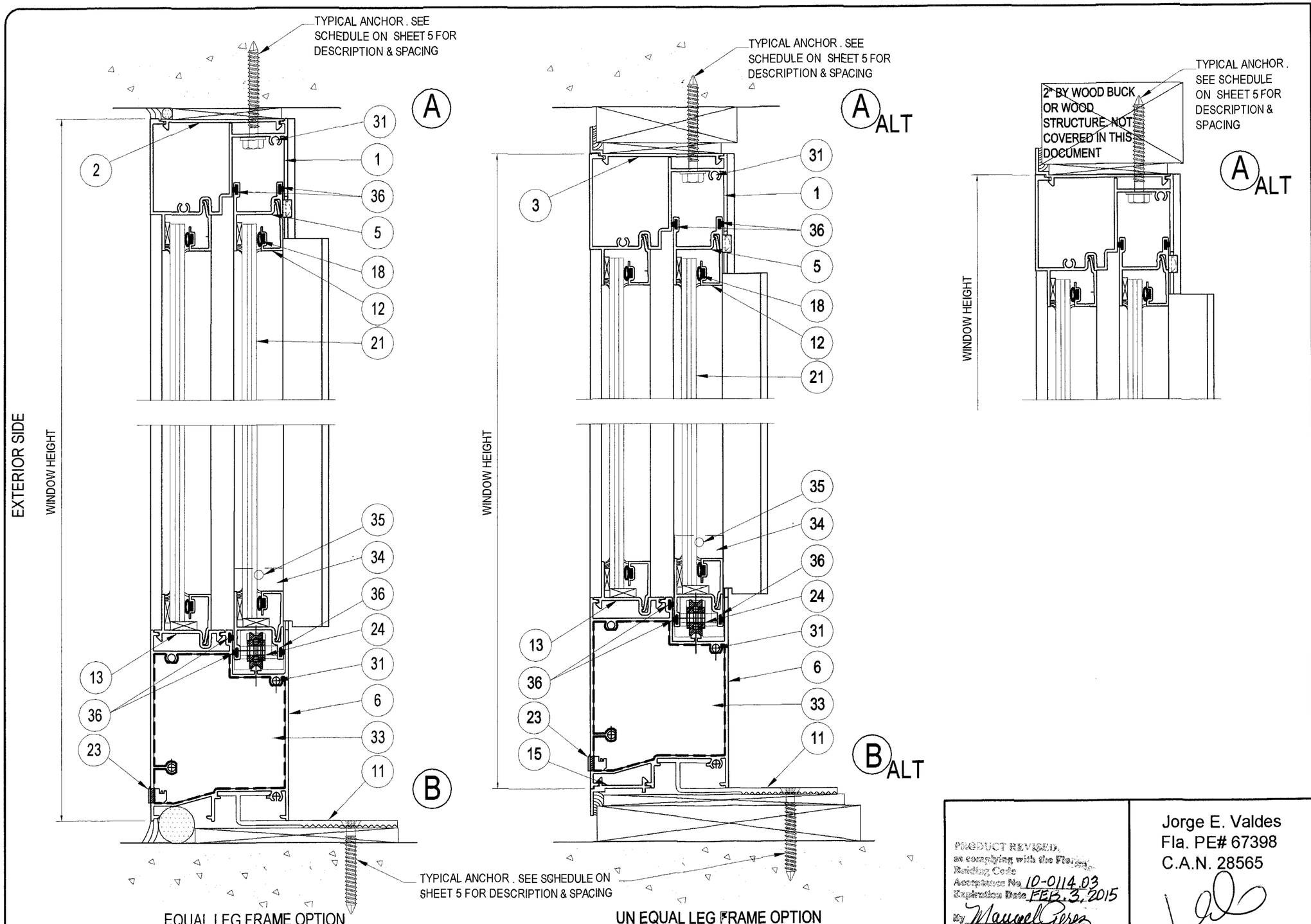

PRODUCT REVISED, as complying with the Florida Building Code
Acceptance No. 10-0114.03
Expiration Date FEB. 3, 2015
By Manuel Perez
Miami Dade Product Control Division

Jorge E. Valdes
Fla. PE# 67398
C.A.N. 28565

Miami Wall Systems, Inc.
701 West 25th Street
Hialeah, Florida. 33010
Phone:(305) 888-2300 Fax:(305) 888-3058

HORIZ ROLLING WINDOW SERIES 106

CROSS SECTIONS

NO.	DATE	REVISION

DATE: 12/18/2009
SCALE: AS NOTED
DWG. BY: L.R.A
CHK. BY: JV
DWG NO.: NOA 106 SM
SHEET 3 OF 7

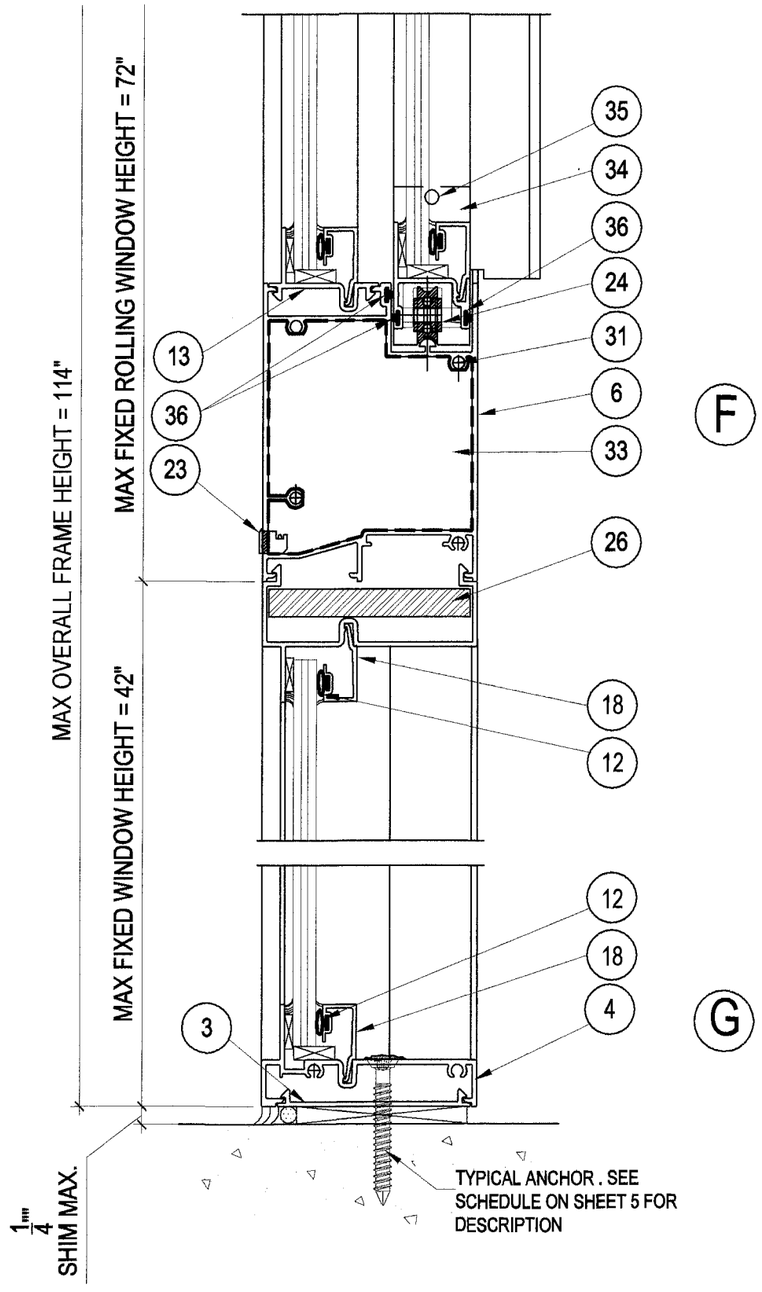

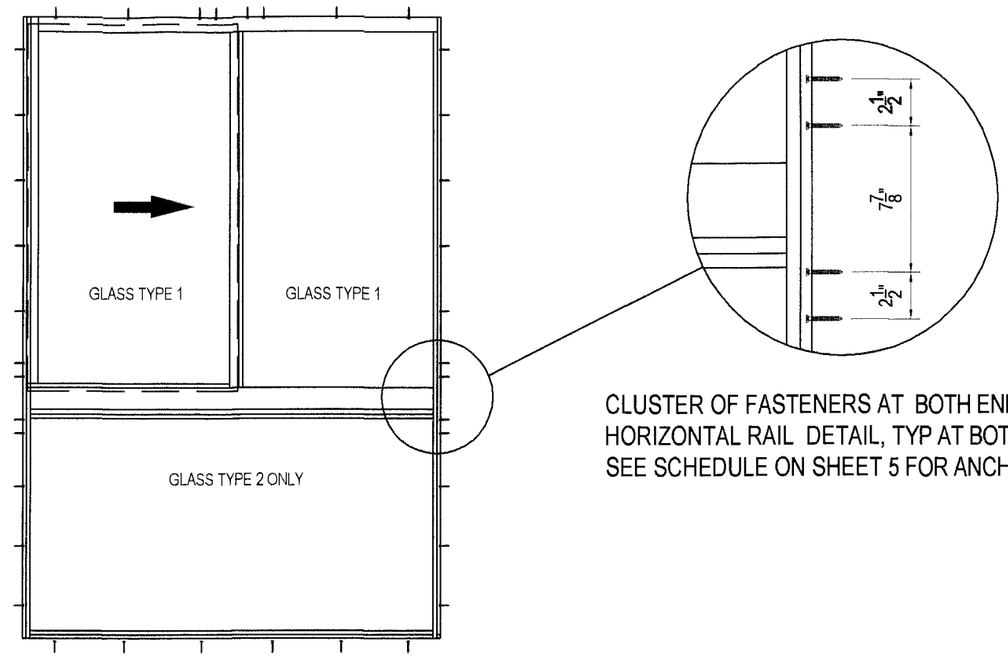

CLUSTER OF FASTENERS AT BOTH ENDS OF HORIZONTAL RAIL DETAIL, TYP AT BOTH JAMBS. SEE SCHEDULE ON SHEET 5 FOR ANCHOR TYPES

PRODUCT REVISED
as complying with the Florida
Building Code
Acceptance No. 10-0114.03
Expiration Date FEB. 3, 2015
By Manuel Perez
Miami-Dade Product Control
Division

Jorge E. Valdes
Fla. PE# 67398
C.A.N. 28565

Miami Wall Systems, Inc.
701 West 25th Street
Hialeah, Florida. 33010
Phone:(305) 888-2300 Fax:(305) 888-3058

HORIZ ROLLING WINDOW SERIES 106

CROSS SECTIONS & DETAILS

NO.	DATE	REVISION

DATE: 12/18/2009
SCALE: AS NOTED
DWG. BY: L.R.A
CHK. BY: JV
DWG NO.: NOA 106 SM
SHEET 4 OF 7

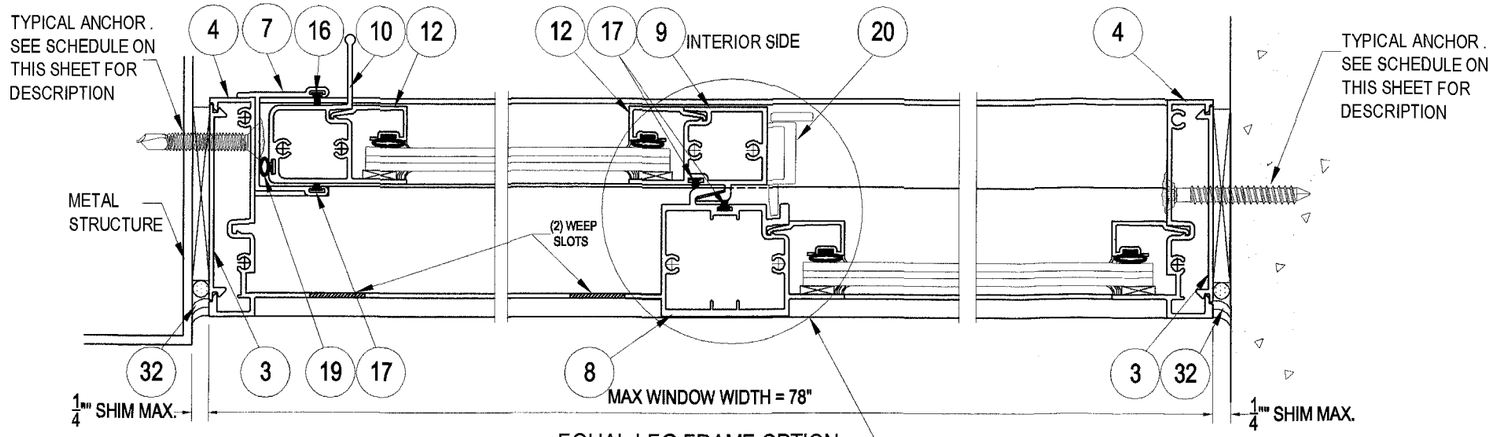

EQUAL LEG FRAME OPTION

C D E

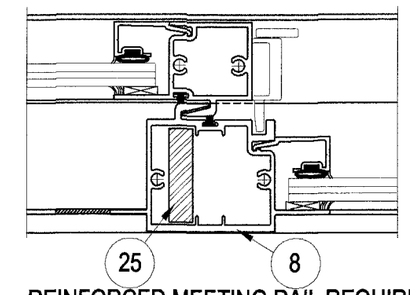

REINFORCED MEETING RAIL REQUIRED AT UNITS UP TO 72" HIGH

D ALT

STANDARD MEETING RAIL. USED AT UNITS UP TO 64" HIGH

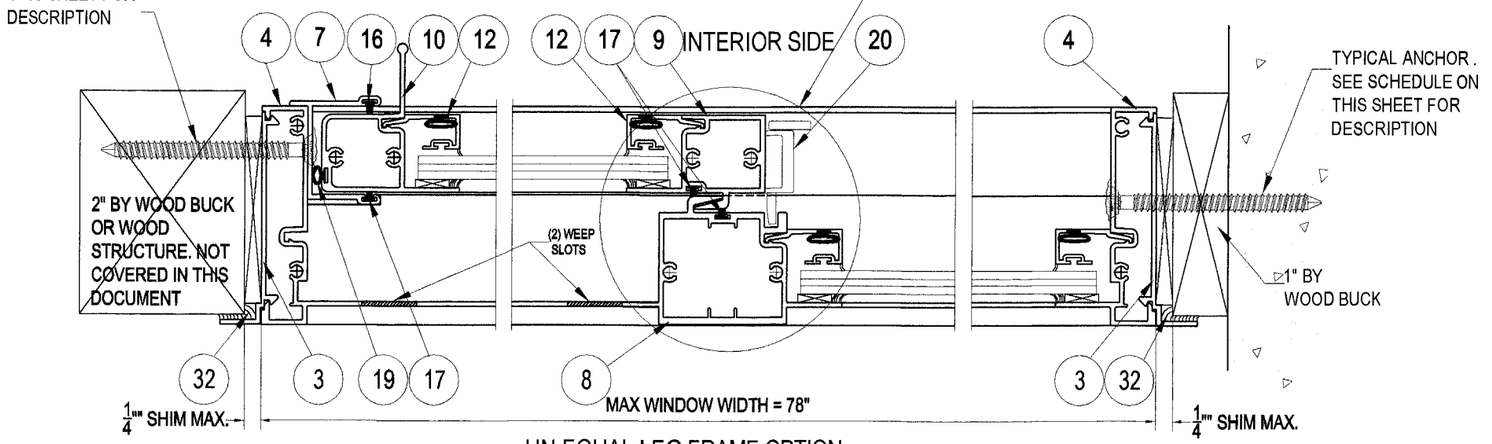

UN EQUAL LEG FRAME OPTION

C ALT D ALT E ALT

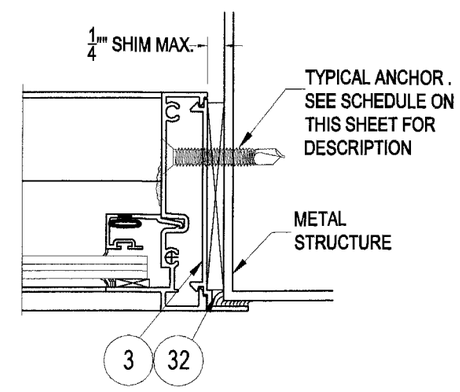

E ALT

ANCHORS SCHEDULE

1. 1/4" Ø ULTRACON BY ELCO INTO HOLLOW BLOCK OR 2,700 p.s.i MIN CONCRETE WITH 1 3/4" MIN. EMBEDMENT & 2 1/2" MIN. EDGE DISTANCE.
2. #14 WOOD SCREW INTO 2" BY WOOD BUCK OR THICKER WOOD STRUCTURE WITH 1 1/2" MIN. PENETRATION INTO WOOD & 1" MIN. EDGE DISTANCE.
3. 1/4" Ø ULTRACON BY ELCO TROUGH 1" BY WOOD BUCK & INTO HOLLOW BLOCK OR 2,700 p.s.i MIN CONCRETE WITH 1 3/4" MIN. EMBEDMENT & 2 1/2" MIN EDGE DISTANCE
4. #14 SELF DRILLING SCREW INTO 1/8" MIN THICK METAL STRUCTURE WITH 1" MIN. EDGE DISTANCE AS FOLLOWS:
   - A36 STEEL.
   - ALUMINUM ALLOY 6063-T5

NOTE: METAL STRUCTURES AND WOOD BUCKS ARE NOT PART OF THIS DOCUMENT AND MUST BE ENGINEERED SEPARETELY.

PRODUCT REVIEWED
as complying with the Florida Building Code
Acceptance No. 10-0114.03
Expiration Date FEB. 3, 2015
By Manuel Perez
Miami-Dade Product Control Division

Jorge E. Valdes
Fla. PE# 67398
C.A.N. 28565

Miami Wall Systems, Inc.
701 West 25th Street
Hialeah, Florida. 33010
Phone:(305) 888-2300 Fax:(305) 888-3058

HORIZ ROLLING WINDOW SERIES 106

CROSS SECTIONS

NO.	DATE	REVISION

DATE: 12/18/2009
SCALE: AS NOTED
DWG. BY: L.R.A
CHK. BY: JV
DWG NO.: NOA 106 SM
SHEET 5 OF 7

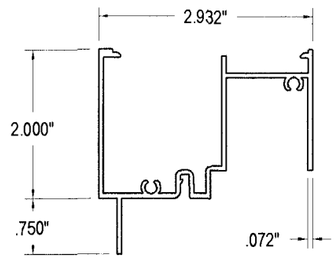

1 EQUAL LEG FRAME HEAD
DIE # 106-010
MATERIAL: ALUMINUM
ALLOY: 6063-T5
TYPICAL WALL: .062"

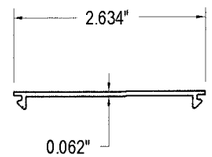

2 EQUAL LEG SNAP-IN PLATE
DIE # 122-011
MATERIAL: ALUMINUM
ALLOY: 6063-T5
TYPICAL WALL: .062"

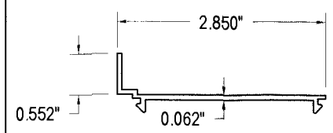

3 FLANGE LEG ADAPTOR
DIE # 106-020
MATERIAL: ALUMINUM
ALLOY: 6063-T5
TYPICAL WALL: .062"

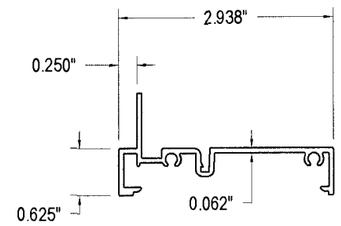

4 FIXED FRAME
DIE # 106-014
MATERIAL: ALUMINUM
ALLOY: 6063-T5
TYPICAL WALL: .062"

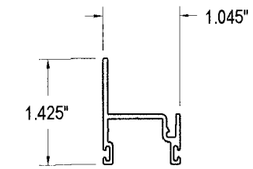

5 VENT HEAD & SILL
DIE # 104-002
MATERIAL: ALUMINUM
ALLOY: 6063-T5
TYPICAL WALL: .062"

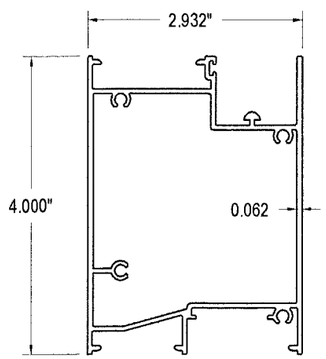

6 FRAME SILL
DIE # 106-011
MATERIAL: ALUMINUM
ALLOY: 6063-T5
TYPICAL WALL: .062"

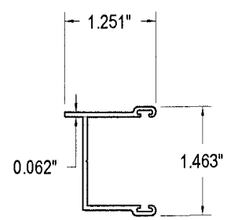

7 VENT JAMB ADAPTOR
DIE # 106-016
MATERIAL: ALUMINUM
ALLOY: 6063-T5
TYPICAL WALL: .062"

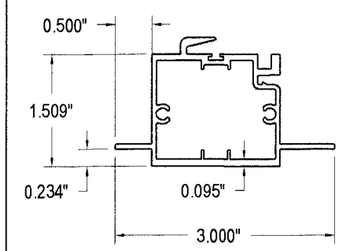

8 FIXED MEETING RAIL
DIE # 106-015
MATERIAL: ALUMINUM
ALLOY: 6063-T5
TYPICAL WALL: .062"

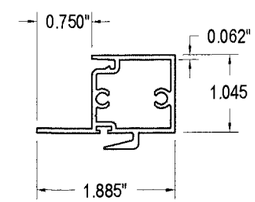

9 MOVING MEETING RAIL
DIE # 104-007
MATERIAL: ALUMINUM
ALLOY: 6063-T5
TYPICAL WALL: .062"

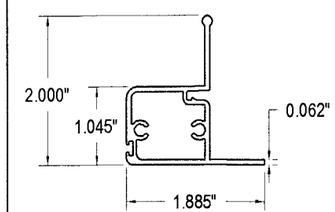

10 VENT PULL STILE
DIE # 106-017
MATERIAL: ALUMINUM
ALLOY: 6063-T5
TYPICAL WALL: .062"

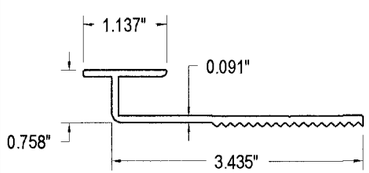

11 SILL ANCHOR
DIE # 106-018
MATERIAL: ALUMINUM
ALLOY: 6063-T5
TYPICAL WALL: .091"

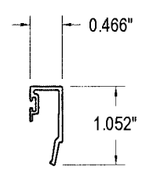

12 GLAZING BEAD FOR
5/16" GLASS
DIE # 104-003
MATERIAL: ALUMINUM
ALLOY: 6063-T5
TYPICAL WALL: .062"

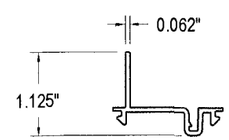

13 TOP ADAPTOR FOR
FRAME SILL
DIE # 106-012
MATERIAL: ALUMINUM
ALLOY: 6063-T5
TYPICAL WALL: .062"

PRODUCT REVIEWED
as complying with the Florida
Building Code
Acceptance No. 10-0114.03
Expiration Date FEB. 3, 2015
By Manuel Perez
Miami-Dade Product Control
Division

Jorge E. Valdes
Fla. PE# 67398
C.A.N. 28565

Miami Wall Systems, Inc.
701 West 25th Street
Hialeah, Florida. 33010
Phone:(305) 888-2300 Fax:(305) 888-3058

HORIZ ROLLING WINDOW SERIES 106

EXTRUSIONS

NO.	DATE	REVISION

DATE: 12/18/2009
SCALE: AS NOTED
DWG. BY: L.R.A
CHK. BY: JV
DWG NO.: NOA 106 SM
SHEET 6 OF 7

MATERIALS LIST

ITEM NO	DESCRIPTION	REQ'D	PART NUMBER	COMMENTS
1	EQUAL LEG FRAME HEAD	1	106-010	
2	EQUAL LEG ADAPTOR	4	122-011	
3	FLANGE LEG ADAPTOR	3	106-020	HEAD & JAMBS
4	FIXED FRAME	2	106-014	FRAME JAMBS
5	VENT HEAD & SILL	2	104-002	
6	FRAME SILL	1	106-011	
7	VENT JAMB ADAPTOR	1	106-016	
8	FIXED MEETING RAIL	1	106-015	
9	MOVING MEETING RAIL	1	104-007	
10	VENT PULL STILE	1	106-017	
11	2" WIDE SILL ANCHOR	AS REQUIRED	106-018	
12	GLAZING BEAD	AS REQUIRED	104-003	
13	TOP ADAPTOR	1	106-012	MEETING RAIL/ FRAME SILL
14	P.T. WOOD BUCKS	AS REQUIRED		1" BY OR 2" BY
15	FLANGE LEG ADAPTOR	1	106-021	FRAME SILL
16	FIN SEAL	AS REQUIRED	7823-6001-6	SCHLEGEL @ VENT JAMB ADAPTOR, INTERIOR
17	FIN SEAL	AS REQUIRED	7916-6001-0	SCHLEGEL- VERT. INTERLOCKS & VENT ADAPTOR
18	BLACK BULB VINYL	AS REQUIRED	3171 PROTOTYPE	WITH GLAZING BEAD
19	BLACK BULB VINYL	AS REQUIRED	3033-0005	USED @ VENT PULL STILE
20	SWEEP LATCH	2	672232	DECO- DIE CAST
21	GLASS- LARGE MISSILE	2		LAMINATED GLASS (SEE SHEET 1)
22	SETTING BLOCKS	(2) PER LITE		3/16" X 1/2" X 4" LG EPDM
23	WEEP WITH FLAPPER	(2) PER FRAME	79500	ASHLAND- (2) PART NYLON
24	TANDEM WHEEL ASSEMBLY	(1) PAIR	(4) WHEELS	ALUM. HOUSING-S/S BB, AXLE & NYLON WHEEL
25	3/8" X 1 1/4" STEEL BAR	AS PER D.P.		REINFORCING @ FIXED INTERLOCK
26	3/8" X 2 3/4" STEEL BAR	1		REINFORCING @ HORIZONTAL MEETING RAIL
27	GLAZING TAPE	AS REQUIRED		3/16"X 3/8" CON'T P.S.A. (2) SIDES
28	SILICONE CAP BEAD	AS REQUIRED		TREMCO SPECTREM II, DOW 795 OR GE 4000
30	SWEEP LATCH FASTENERS	(2) EACH LATCH		(2) #8-32 X 1/2" F.H.S.M.S., S/S
31	ASSEMBLY FASTENERS	AS REQUIRED		#10 X 1" P.H.S.M.S., S/S
32	PERIMETER CAULKING			BACKER ROD AS REQUIRED
33	.032" SEALING END CAP	2	1"X 2 5/32"X1"	SEAL IN PLACE @ ENDS OF FR. SILL
34	.032" SWEEP PLATE	1	1 1/32" X 2 1/8"	BOTTOM OF MOVING INTERLOCK
35	#8 X 3/8" PHSMS, S/S	1		ATTACH SWEEP PLATE
36	FIN SEAL	AS REQUIRED	7913-6001-3	SCHLEGEL- HORIZ. VENT TOP & BOTT. RAILS

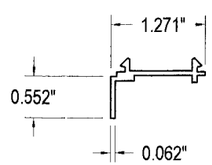

15 FLANGE LEG ADAPTOR
FRAME SILL
DIE # 106-021
MATERIAL: ALUMINUM
ALLOY: 6063-T5
TYPICAL WALL: .062"

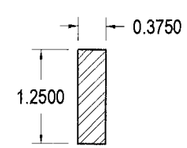

25 STEEL REINFORCEMENT
AT FIXED INTERLOCK
MATERIAL: A36 STEEL

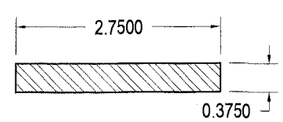

26 STEEL REINFORCEMENT
AT HORIZONTAL MEETING RAIL
MATERIAL: A36 STEEL

PRODUCT REVISED
to complying with the Florida
Building Code
Acceptance No. 10-0114.03
Expiration Date FEB. 3, 2015
By Manuel Perez
Miami-Dade Product Control
Division

Jorge E. Valdes
Fla. PE# 67398
C.A.N. 28565

Miami Wall Systems, Inc.
701 West 25th Street
Hialeah, Florida. 33010
Phone:(305) 888-2300 Fax:(305) 888-3058

HORIZ ROLLING WINDOW SERIES 106

BILL OF MATERIALS & EXTRUSIONS

NO.	DATE	REVISION

DATE: 12/18/2009
SCALE: AS NOTED
DWG. BY: L.R.A
CHK. BY: JV
DWG NO.: NOA 106 SM
SHEET 7 OF 7