MIAMI-DADE COUNTY
BUILDING CODE COMPLIANCE OFFICE (BCCO)
PRODUCT CONTROL DIVISION

MIAMI-DADE COUNTY, FLORIDA
METRO-DADE FLAGLER BUILDING
140 WEST FLAGLER STREET, SUITE 1603
MIAMI, FLORIDA 33130-1563
(305) 375-2901 FAX (305) 372-6339
www.miamidade.gov/buildingcode

NOTICE OF ACCEPTANCE (NOA)

American Aluminum Doors Corp.
1026 East 24 Street
Hialeah, FL 33013

SCOPE:

This NOA is being issued under the applicable rules and regulations governing the use of construction materials. The documentation submitted has been reviewed by Miami-Dade County Product Control Division and accepted by the Board of Rules and Appeals (BORA) to be used in Miami Dade County and other areas where allowed by the Authority Having Jurisdiction (AHJ).

This NOA shall not be valid after the expiration date stated below. The Miami-Dade County Product Control Division (In Miami Dade County) and/or the AHJ (in areas other than Miami Dade County) reserve the right to have this product or material tested for quality assurance purposes. If this product or material fails to perform in the accepted manner, the manufacturer will incur the expense of such testing and the AHJ may immediately revoke, modify, or suspend the use of such product or material within their jurisdiction. BORA reserves the right to revoke this acceptance, if it is determined by Miami-Dade County Product Control Division that this product or material fails to meet the requirements of the applicable building code.

This product is approved as described herein, and has been designed to comply with the Florida Building Code, including the High Velocity Hurricane Zone.

DESCRIPTION: Outswing Glazed Aluminum French Door w/ or w/o Sidelites – N.I.

APPROVAL DOCUMENT: Drawing No. **W05-02**, titled "Aluminum Outswing French Door (N.I.)", sheets 1 through 6 of 6, dated 01/11/05, with revision A dated 12/10/09, prepared by Al-Farooq Corporation, signed and sealed by Arshad Viqar, P.E., bearing the Miami-Dade County Product Control renewal stamp with the Notice of Acceptance number and expiration date by the Miami-Dade County Product Control Division.

MISSILE IMPACT RATING: None

LABELING: Each unit shall bear a permanent label with the manufacturer's name or logo, city, state and following statement: "Miami-Dade County Product Control Approved", unless otherwise noted herein

RENEWAL of this NOA shall be considered after a renewal application has been filed and there has been no change in the applicable building code negatively affecting the performance of this product.

TERMINATION of this NOA will occur after the expiration date or if there has been a revision or change in the materials, use, and/or manufacture of the product or process. Misuse of this NOA as an endorsement of any product, for sales, advertising or any other purposes shall automatically terminate this NOA. Failure to comply with any section of this NOA shall be cause for termination and removal of NOA.

ADVERTISEMENT: The NOA number preceded by the words Miami-Dade County, Florida, and followed by the expiration date may be displayed in advertising literature. If any portion of the NOA is displayed, then it shall be done in its entirety.

INSPECTION: A copy of this entire NOA shall be provided to the user by the manufacturer or its distributors and shall be available for inspection at the job site at the request of the Building Official.

This NOA **renews NOA # 05-0223.02** and consists of this page 1 and evidence page E-1, as well as approval document mentioned above.

The submitted documentation was reviewed by **Carlos M. Utrera, P.E.**

MIAMI-DADE COUNTY APPROVED

04/21/10

NOTICE OF ACCEPTANCE: EVIDENCE SUBMITTED

A. DRAWINGS

1. Drawing No. **W05-02**, titled "Aluminum Outswing French Door (N.I.)", sheets 1 through 6 of 6, dated 01/11/05, with revision A dated 12/10/09, prepared by Al-Farooq Corporation, signed and sealed by Arshad Viqar, P.E.

B. TESTS

1. Test reports on 1) Air Infiltration Test per FBC, TAS 202-94
   2) Uniform Static Air Pressure Test Loading per FBC, TAS 202-94
   3) Water Resistance Test per FBC, TAS 202-94
   4) Forced Entry Test, per FBC 2411.3.2.1 (b) and TAS 202-94

   along with marked-up drawings and installation diagram of aluminum door line, prepared by Hurricane Engineering & Testing, Test Report No. **HETI-04-1411**, dated 10/11/04, signed and sealed by Ivonne Ghia, P.E.
   "Submitted under NOA# 05-0223.02"

C. CALCULATIONS

1. Anchor verification calculations and structural analysis, complying with FBC-2007, prepared by Al-Farooq Corporation, dated 12/09/09, signed and sealed by Arshad Viqar, P.E.
   Complies with ASTM E1300-02/04

D. QUALITY ASSURANCE

1. Miami Dade Building Code Compliance Office (BCCO).

E. MATERIAL CERTIFICATIONS

1. None.

F. STATEMENTS

1. Statement letter of code conformance and no financial interest, issued by Al-Farooq Corporation, dated 12/09/09, signed and sealed by Arshad Viqar, P.E.

04/21/10

Carlos M. Utrera, P.E.
Product Control Examiner
NOA No. 10-0126.05
Expiration Date: April 28, 2015
Approval Date: May 12, 2010

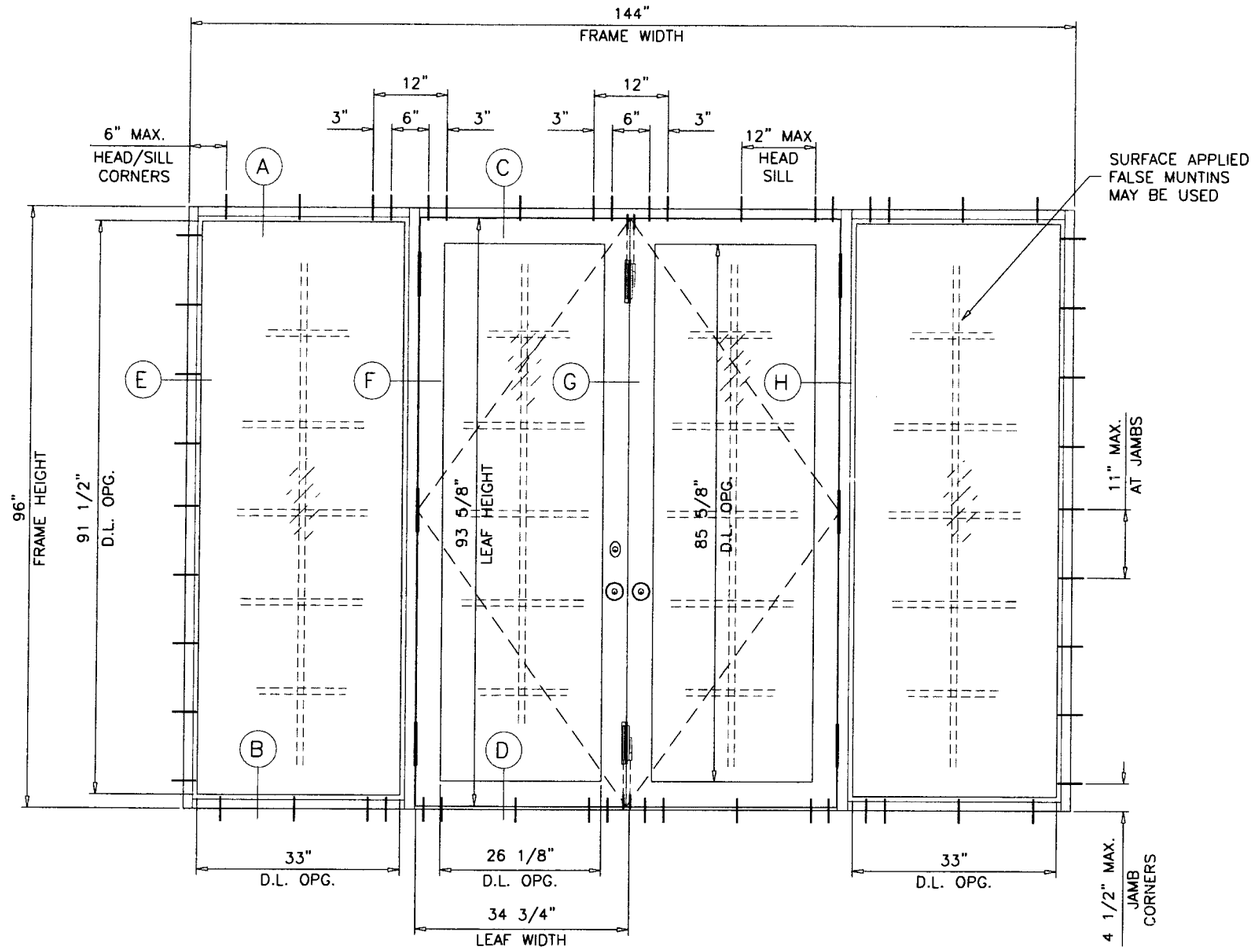

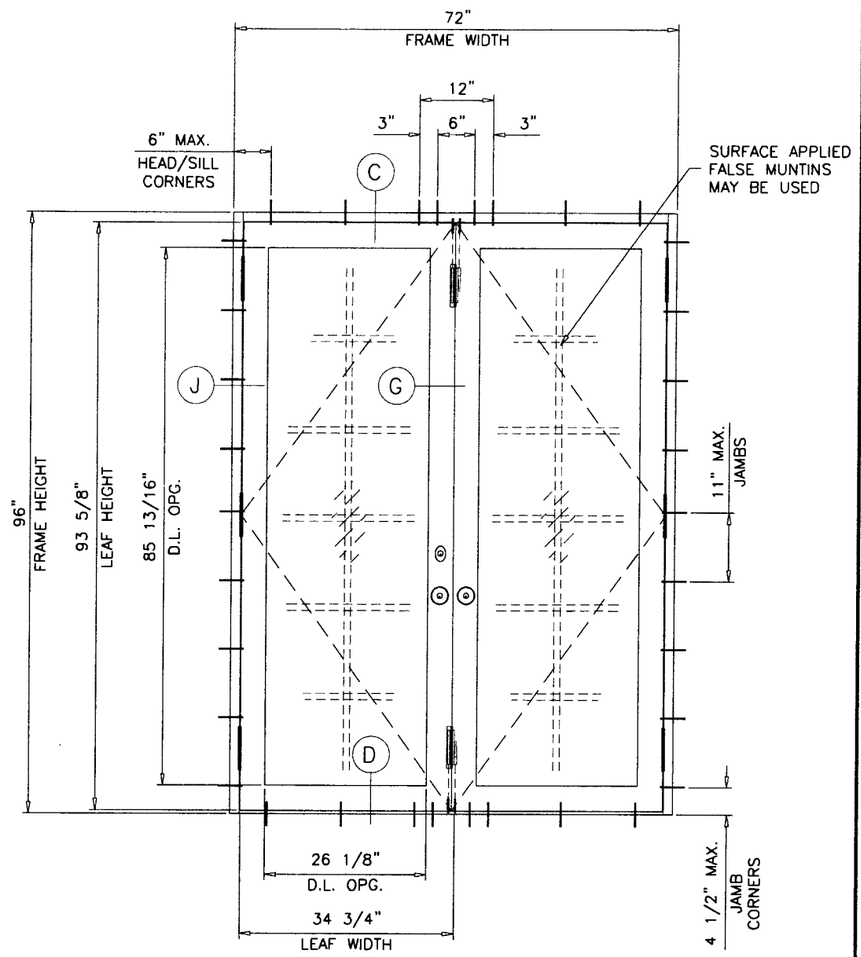

TYPICAL ELEVATIONS

ALUMINUM OUTSWING FRENCH DOOR (N.I.)

APPROVAL APPLIES TO SINGLE (X) AND DOUBLE (XX) LEAF DOORS WITH OR WITHOUT SIDELITES.
SIDE LITES CAN BE ON ONE OR BOTH SIDES OF DOOR.
SEE SHEET 2 FOR DESIGN LOAD CAPACITIES.

THIS PRODUCT HAS BEEN DESIGNED AND TESTED TO COMPLY WITH THE REQUIREMENTS OF THE FLORIDA BUILDING CODE 2007 EDITION INCLUDING HIGH VELOCITY HURRICANE ZONE (HVHZ).

WOOD BUCKS BY OTHERS, MUST BE ANCHORED PROPERLY TO TRANSFER LOADS TO THE STRUCTURE.

ANCHORS SHALL BE AS LISTED, SPACED AS SHOWN ON DETAILS, ANCHORS EMBEDMENT TO BASE MATERIAL SHALL BE BEYOND WALL DRESSING OR STUCCO.

ANCHORING OR LOADING CONDITIONS NOT SHOWN IN THESE DETAILS ARE NOT PART OF THIS APPROVAL.

A LOAD DURATION INCREASE IS USED IN DESIGN OF ANCHORS INTO WOOD ONLY.

MATERIALS INCLUDING BUT NOT LIMITED TO STEEL/METAL SCREWS, THAT COME INTO CONTACT WITH OTHER DISSIMILAR MATERIALS SHALL MEET THE REQUIREMENTS OF 2007 FLORIDA BLDG. CODE SECTION 2003.8.4.

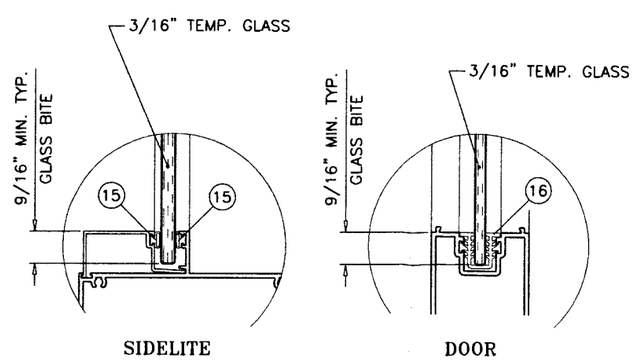

GLAZING DETAIL

DOORS NOT RATED FOR IMPACT.
INSTALLATION OF THIS PRODUCT IN THE HVHZ AREA REQUIRES THE USE OF APPROVED SHUTTERS OR EXTERNAL PROTECTION DEVICES COMPLYING WITH HVHZ REQUIREMENTS.
INSTALLATION OF THIS SYSTEM OUTSIDE THE HVHZ AREA SHALL MEET THE APPLICABLE REQUIREMENTS FOR WIND BORNE DEBRIS PROTECTION.

Engr: ARSHAD VIQAR
CIVIL
FLA. PE # 38863
C.A.N. 3538

DEC 1 6 2009

PRODUCT RENEWED
as complying with the Florida Building Code
Acceptance No 10-0126.05
Expiration Date 04/28/2015
By
Miami Dade Product Control Division

AL-FAROOQ CORPORATION
ENGINEERS & PROJECT DEVELOPMENT
1235 S.W. 87 AVE
MIAMI, FLORIDA 33174
TEL. (305) 264-8100 FAX. (305) 262-6978

COMP-ANL\W05-02

ALUMINUM OUTSWING FRENCH DOOR (N.I.)

AMERICAN ALUMINUM DOOR CORP.
2214 WEST 8 COURT
HIALEAH, FL. 33010
TEL. (305) 884-4316 FAX. (305) 884-4728

revisions:

no	date	by	description
A	12.10.09		UPDATED FOR 2007 FBC

date: 01-11-05
scale: 3/8" = 1"
dr. by: HAMID
chk. by:

drawing no.
W05-02

DOORS WITHOUT SIDELITES				
DESIGN LOAD CAPACITY – PSF				
FRAME HEIGHT INCHES	DOOR WIDTH INCHES		3/16" TEMP. GLASS	
			EXT. (+)	INT. (–)
80	30 (X)	60 (XX)	75.3	108.0
	33 (X)	66 (XX)	75.3	98.2
	36 (X)	72 (XX)	75.3	90.0
84	30 (X)	60 (XX)	75.3	102.9
	33 (X)	66 (XX)	75.3	93.5
	36 (X)	72 (XX)	75.3	85.7
96	30 (X)	60 (XX)	75.3	96.0
	33 (X)	66 (XX)	75.3	87.3
	36 (X)	72 (XX)	75.3	80.0
96	30 (X)	60 (XX)	75.3	90.0
	33 (X)	66 (XX)	75.3	81.8
	36 (X)	72 (XX)	75.0	75.0

STATIONARY PANEL (O) OR DOORS WITH SIDELITES						
DESIGN LOAD CAPACITY – PSF						
FRAME HEIGHT INCHES	DOOR WIDTH INCHES	SIDELITE WIDTH INCHES	UN-REINFORCED JAMB		REINFORCED JAMB	
			EXT. (+)	INT. (–)	EXT. (+)	INT. (–)
80	30 (X) 60 (XX)	30	75.3	108.0	75.3	108.0
		36	75.3	94.4	75.3	94.4
		42	75.3	85.0	75.3	85.0
	36 (X) 72 (XX)	30	75.3	108.0	75.3	108.0
		36	75.3	94.4	75.3	94.4
		42	75.3	85.0	75.3	85.0
84	30 (X) 60 (XX)	30	75.3	101.7	75.3	101.7
		36	75.3	88.6	75.3	88.6
	36 (X) 72 (XX)	30	75.3	99.6	75.3	101.7
		36	75.3	88.6	75.3	88.6
90	30 (X) 60 (XX)	30	75.3	89.1	75.3	93.6
		36	75.3	81.0	75.3	81.3
	36 (X) 72 (XX)	30	75.3	81.0	75.3	93.6
		36	74.2	74.2	75.3	81.3
96	30 (X) 60 (XX)	30	73.4	73.4	75.3	86.7
		36	66.7	66.7	75.3	75.0
	36 (X) 72 (XX)	30	66.7	66.7	75.3	84.2
		36	61.2	61.2	75.0	75.0

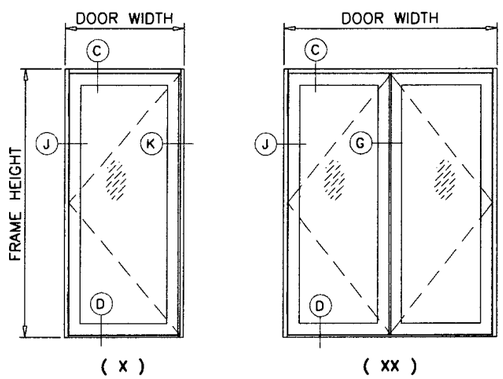

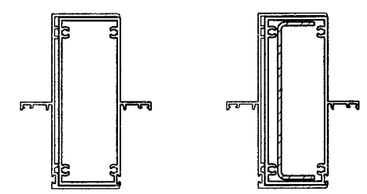

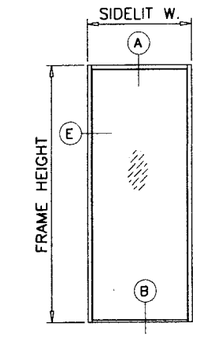

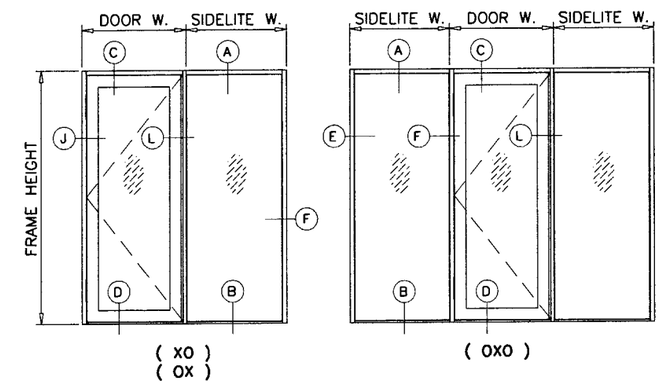

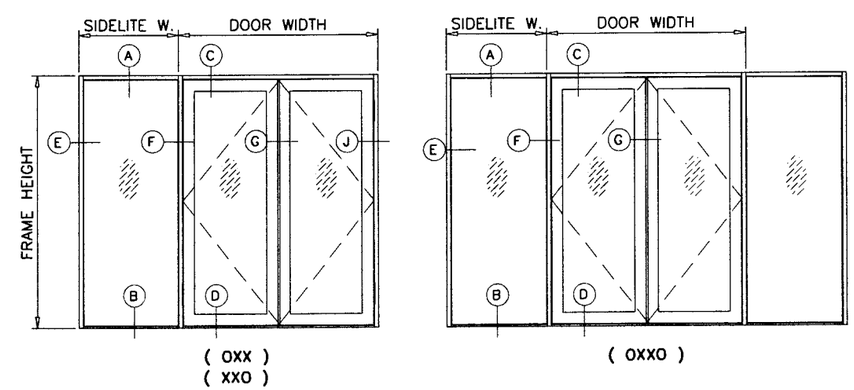

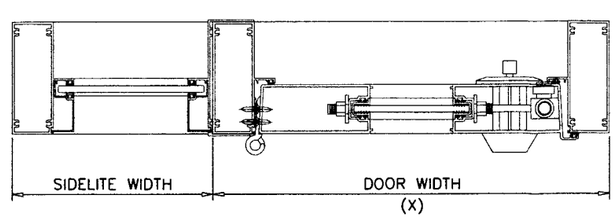

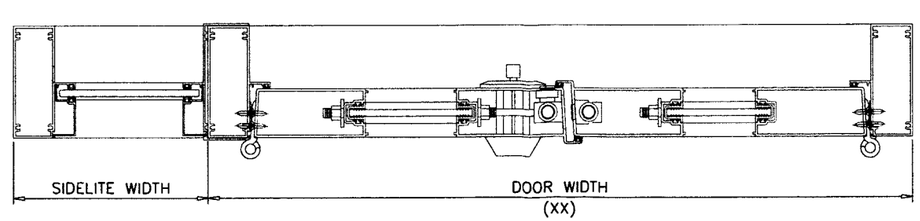

NOTE:
GLASS CAPACITIES ON THIS SHEET ARE BASED ON ASTM E1300-04 (3 SEC. GUSTS) AND FLORIDA BUILDING COMMISSION DECLARATORY STATEMENT DCA05-DEC-219

Engr: ARSHAD VIQAR
CIVIL
FLA. PE # 38863
C.A.N. 3538

DEC 16 2009

PRODUCT RENEWED
as complying with the Florida Building Code
Acceptance No 10-0126.05
Expiration Date 04/28/2015
By
Miami Dade Product Control Division

AL-FAROOQ CORPORATION
ENGINEERS & PRODUCT DEVELOPMENT
1235 S.W. 87 AVE
MIAMI, FLORIDA 33174
TEL. (305) 264-8100 FAX. (305) 262-6978
COMP-ANL\W05-02

ALUMINUM OUTSWING FRENCH DOOR (N.I.)
AMERICAN ALUMINUM DOOR CORP.
2214 WEST 8 COURT
HIALEAH, FL. 33010
TEL. (305) 884-4316 FAX. (305) 884-4728

revisions:

no	date	by	description
A	12.10.09		UPDATED FOR 2007 FBC

date: 01-11-05
scale: 3/8" = 1"
dr. by: HAMID
chk. by:

drawing no.
W05-02

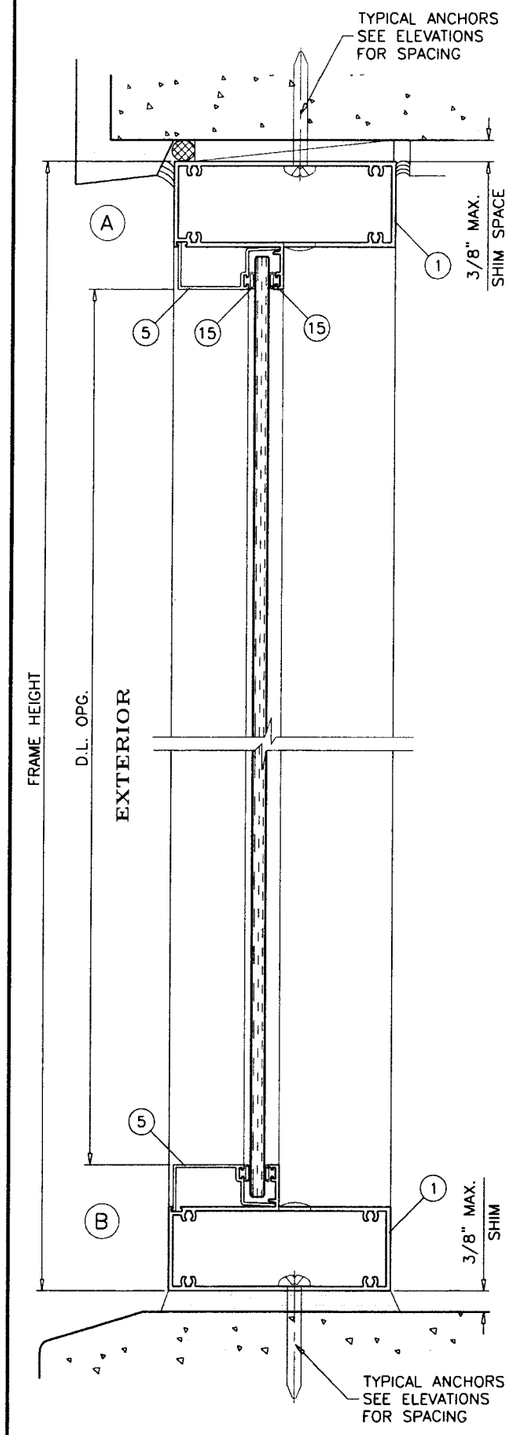

STATIONARY UNITS

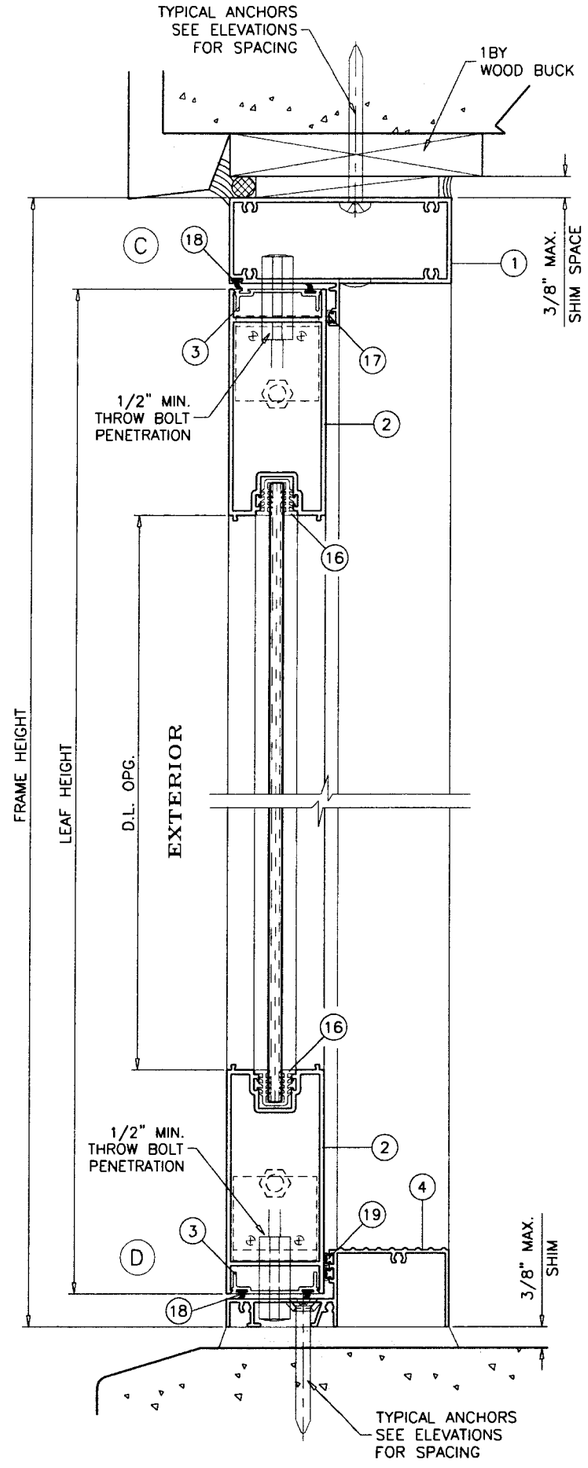

OPERABLE UNITS

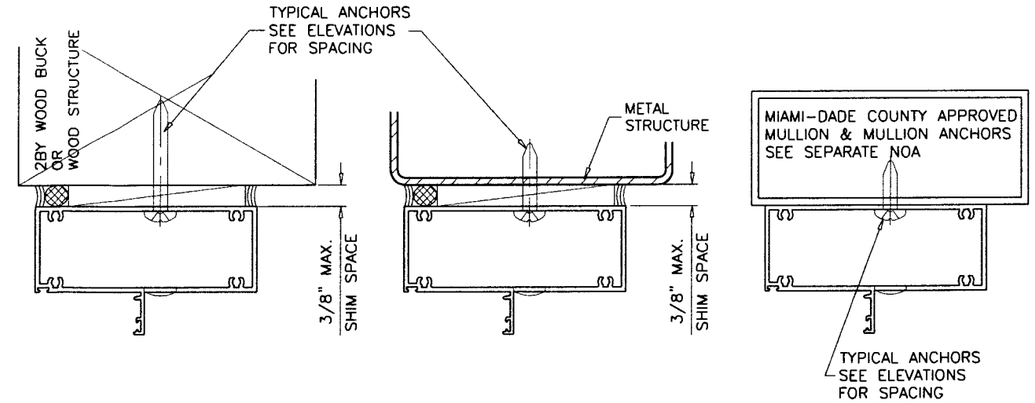

WOOD BUCKS AND METAL STRUCTURE NOT BY AMERICAN DOOR MUST SUSTAIN LOADS IMPOSED BY GLAZING SYSTEM AND TRANSFER THEM TO THE BUILDING STRUCTURE.

TYPICAL ANCHORS: SEE ELEV. FOR SPACING

1/4" DIA. ULTRACON BY 'ELCO' (Fu=177 KSI, Fy=155 KSI)

INTO 2BY WOOD BUCKS OR WOOD STRUCTURES
1-3/8" MIN. PENETRATION INTO WOOD

THRU 1BY BUCKS INTO CONC. OR MASONRY
1-1/4" MIN. EMBED INTO CONC. OR MASONRY

DIRECTLY INTO CONC. OR MASONRY
1-1/4" MIN. EMBED INTO CONC. OR MASONRY

#14 SELF DRILLING SCREWS (GRADE 5 CRS)

INTO MIAMI-DADE COUNTY APPROVED MULLIONS (MIN. THK. = .090")

INTO METAL STRUCTURES
STEEL : 12 GA. MIN. (Fy = 36 KSI MIN.)
ALUMINUM : 1/8" THK. MIN. (6063-T5 MIN.)
(STEEL IN CONTACT WITH ALUMINUM TO BE PLATED OR PAINTED)

TYPICAL EDGE DISTANCE

INTO CONCRETE AND MASONRY = 2" MIN.
INTO WOOD STRUCTURE = 1" MIN.
INTO METAL STRUCTURE = 3/4" MIN.

CONCRETE AT HEAD, SILL OR JAMBS f'c = 3000 PSI MIN.
C-90 HOLLOW/FILLED BLOCK AT JAMBS f'm = 2000 PSI MIN.

SEALANTS:

ALL FRAME AND PANEL JOINT, INSTALLATION SCREWS AND HEADS OF ANCHOR SCREWS AT SILL TO BE SEALED WITH WHITE/ALUM COLORED SILICONE.

Engr: ARSHAD VIQAR
CIVIL
FLA. PE # 38863
C.A.N. 3538

DEC 1 6 2009

PRODUCT RENEWED
as complying with the Florida Building Code
Acceptance No 10-0126.05
Expiration Date 04/28/2015
By
Miami Dade Product Control Division

AL-FAROOQ CORPORATION
ENGINEERS & PRODUCT DEVELOPMENT
1235 S.W. 87 AVE
MIAMI, FLORIDA 33174
TEL. (305) 264-8100 FAX. (305) 262-6978
COMP-ANL\W05-02

ALUMINUM OUTSWING FRENCH DOOR (N.I.)

AMERICAN ALUMINUM DOOR CORP.
2214 WEST 8 COURT
HIALEAH, FL. 33010
TEL. (305) 884-4316 FAX. (305) 884-4728

revisions:

no	date	by	description
A	12.10.09		UPDATED FOR 2007 FBC

date: 01-11-05
scale: 3/8" = 1"
dr. by: HAMID
chk. by:

drawing no.
W05-02

sheet 3 of 6

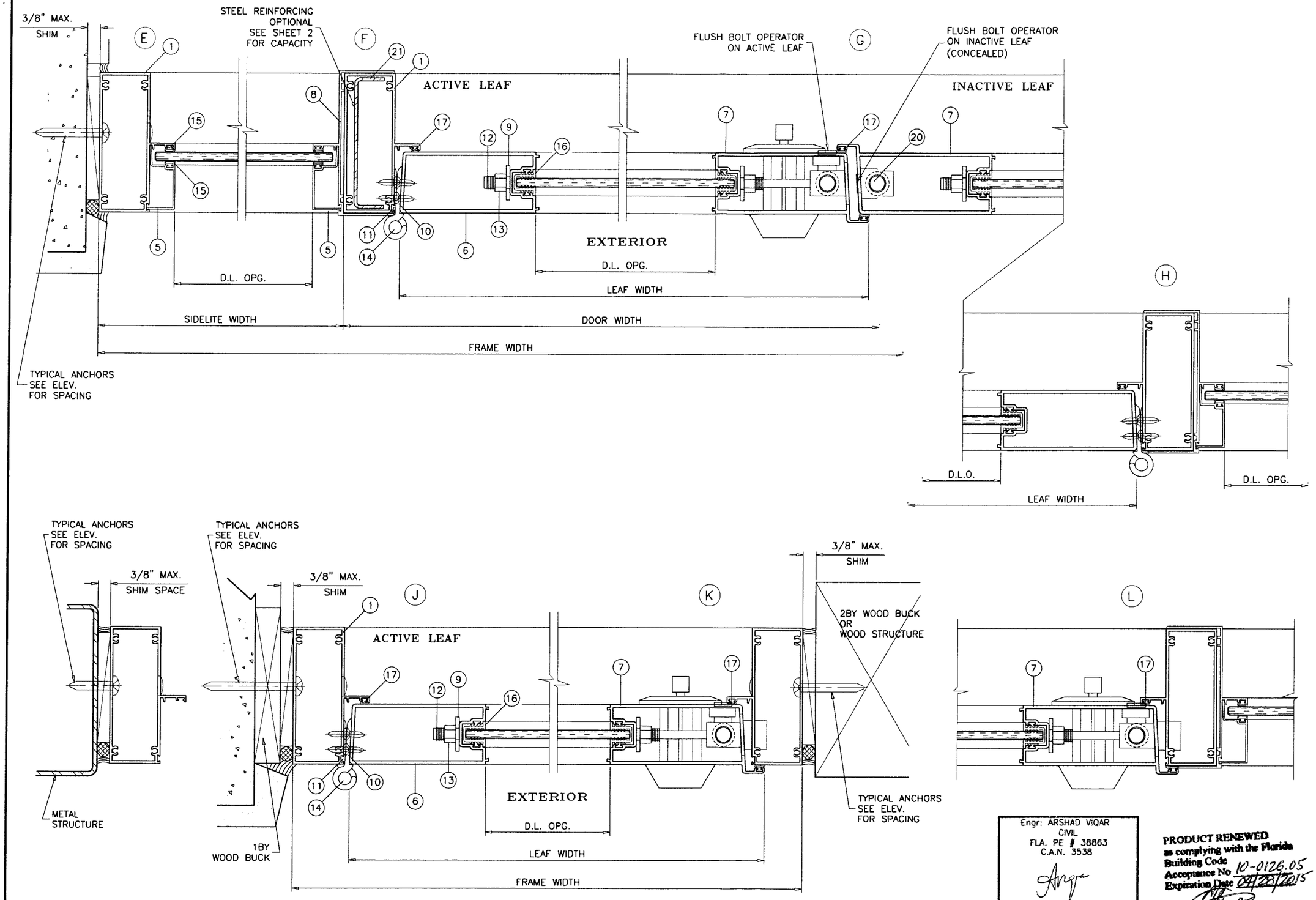

Engr: ARSHAD VIQAR
CIVIL
FLA. PE # 38863
C.A.N. 3538

DEC 1 6 2009

PRODUCT RENEWED
as complying with the Florida Building Code
Acceptance No 10-0126.05
Expiration Date 04/23/2015
By
Miami Dade Product Control Division

AL-FAROOQ CORPORATION
ENGINEERS & PRODUCT DEVELOPMENT
1235 S.W. 87 AVE
MIAMI, FLORIDA 33174
TEL. (305) 264-8100 FAX. (305) 262-6978

COMP-ANL\W05-02

ALUMINUM OUTSWING FRENCH DOOR (N.I.)

AMERICAN ALUMINUM DOOR CORP.
2214 WEST 8 COURT
HIALEAH, FL. 33010
TEL. (305) 884-4316 FAX. (305) 884-4728

revisions:

no	date	by	description
A	12.10.09		UPDATED FOR 2007 FBC

date: 01-11-05
scale: 3/8" = 1"
dr. by: HAMID
chk. by:

drawing no.
W05-02

sheet 4 of 6

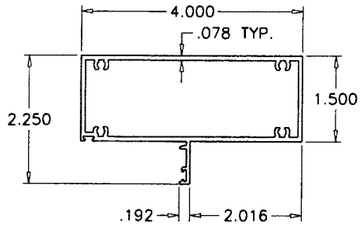

(1) FRAME HEAD/JAMB

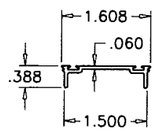

(3) WEATHERSTRIP ADAPTER

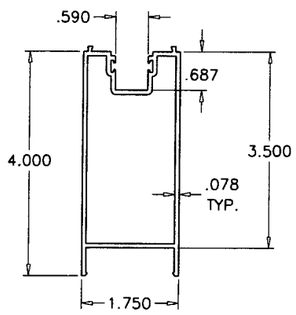

(2) TOP/BOTTOM RAIL

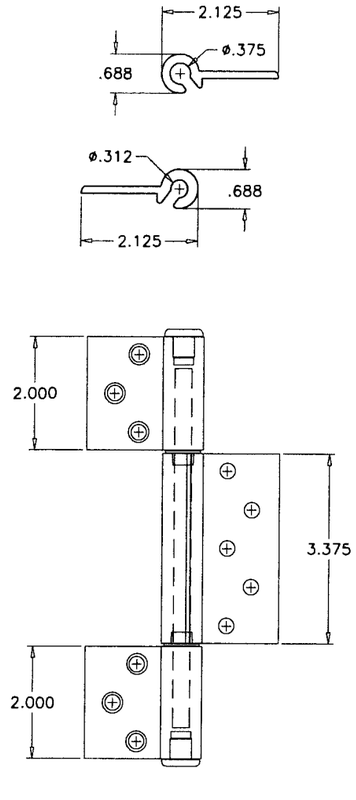

(10) (11) 3 PIECE HINGE

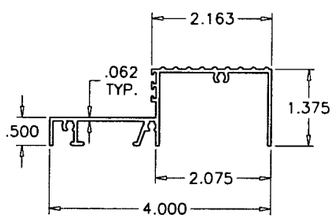

(4) THRESHOLD

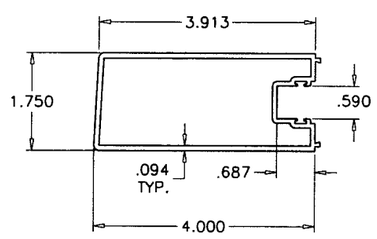

(6) HINGE STILE

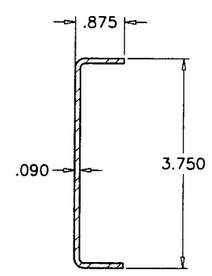

(21) STEEL REINFORCING
36 KSI MIN.

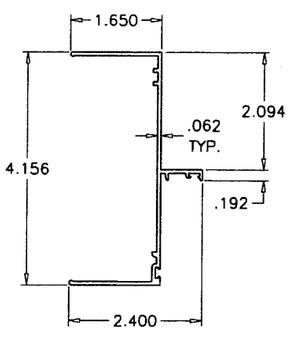

(8) SIDELITE JAMB

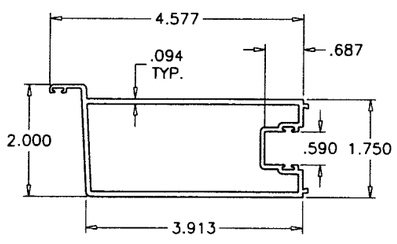

(7) LOCK STILE

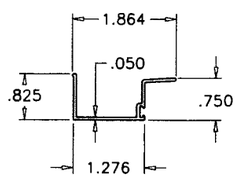

(5) SIDELITE GLAZING BEAD

ITEM #	PART #	REQD.	DESCRIPTION	MATERIAL	MANF./SUPPLIER/REMARKS
1	R1-101	3/DOOR	FRAME HEAD/JAMB	6063-T6	-
2	R1-107	2/LEAF	DOOR TOP/BOTTOM RAIL	6061-T6	-
3	R1-104	AS REQD.	WEATHERSTRIP ADAPTER	6063-T5	-
4	R1-102	1/DOOR	THRESHOLD	6063-T5	-
5	R1-110	AS REQD.	GLAZING ADAPTER (SIDELITE)	6063-T5	-
6	R1-108	1/LEAF	HINGE STILE	6063-T5	-
7	R1-109	1/LEAF	LOCK STILE	6063-T5	-
8	R1-103	AS REQD.	SIDELITE JAMB	6063-T6	-
9	-	1/CORNER	ASSEMBLY WASHER	STEEL	1" O.D. X .450 I.D. X .110 THK.
10	R1-105	3/LEAF	HINGE DOOR PORTION	6063-T5	-
11	R1-106	3/LEAF	HINGE FRAME PORTION	6063-T5	-
12	-	2/LEAF	3/8"-16 X 32" LONG THREADED ROD	STEEL	-
13	-	2/LEAF	3/8"-16 NUT	-	-
14	-	1/HINGE	5/16" X 6" ROD	STEEL	PLATED STEEL
15	PT-336	AS REQD.	GLAZING VINYL (SIDELITE)	VINYL	MASTER TOOL CO.
16	1329	AS REQD.	GLAZING VINYL (LEAF)	VINYL	MASTER TOOL CO.
17	PT-336	AS REQD.	BULB WEATHERSTRIPPING	VINYL	MASTER TOOL CO.
18	W13331NW	AS REQD.	PILE WEATHERSTRIPPING	-	ULTRAFAB
19	TD-339	AS REQD.	BULB WEATHERSTRIPPING	VINYL	MASTER TOOL CO.
20	2508	AS REQD.	FLUSH BOLTS	-	REGENT HARDWARE
21	-	OPTIONAL	REINFORCING CHANNEL	STEEL	-
22	#8 X 3/4"	AS REQD.	FRAME ASSEMBLY SCREWS	-	PH SMS

LOCKS:

A) INACTIVE LEAF

CONCEALED FLUSH BOLTS: BY 'REGENT HARDWARE' SERIES 2508 MANUALLY OPERATED, LEVER LOCATED AT 14" FROM BOTTOM AND 17" FROM TOP

B) ACTIVE LEAF:

1) CONVENTIONAL DOOR KNOB LOCKSET AT 36-1/2" FROM BOTTOM BY ,YALE NEW TRADITIONS'

2) KEY OPERATED ON EXTERIOR AND THUMB TURN ON INTERIOR THROW BOLT LOCATED AT 43-1/2" FROM BOTTOM BY 'YALE NEW TRADITIONS'

3) CONCEALED FLUSH BOLTS, MANUALLY OPERATED LEVER MOUNTED ON INSIDE FACE OF LEAF STILE LOCATED AT 14" FROM BOTTOM AND 17" FROM TOP.

NOTE: TOP AND BOTTOM FLUSH BOLTS MUST BE ENGAGED DURING PERIODS OF HURRICANE WARNING.

Engr: ARSHAD VIQAR
CIVIL
FLA. PE # 38863
C.A.N. 3538

DEC 1 6 2009

PRODUCT RENEWED
as complying with the Florida Building Code
Acceptance No 10-0126.05
Expiration Date 04/28/2015
By
Miami-Dade Product Control Division

AL-FAROOQ CORPORATION
ENGINEERS & PRODUCT DEVELOPMENT
1235 S.W. 87 AVE
MIAMI, FLORIDA 33174
TEL. (305) 264-8100 FAX. (305) 262-6978

COMP-ANL\W05-02

ALUMINUM OUTSWING FRENCH DOOR (N.I.)

AMERICAN ALUMINUM DOOR CORP.
2214 WEST 8 COURT
HIALEAH, FL. 33010
TEL. (305) 884-4316 FAX. (305) 884-4728

revisions:

no	date	by	description
A	12.10.09		UPDATED FOR 2007 FBC

date: 01-11-05
scale: 3/8" = 1"
dr. by: HAMID
chk. by:

drawing no.
W05-02

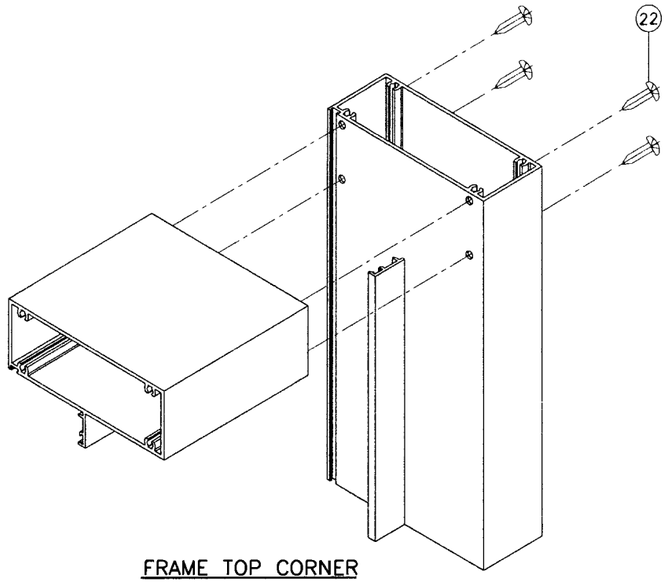

FRAME TOP CORNER

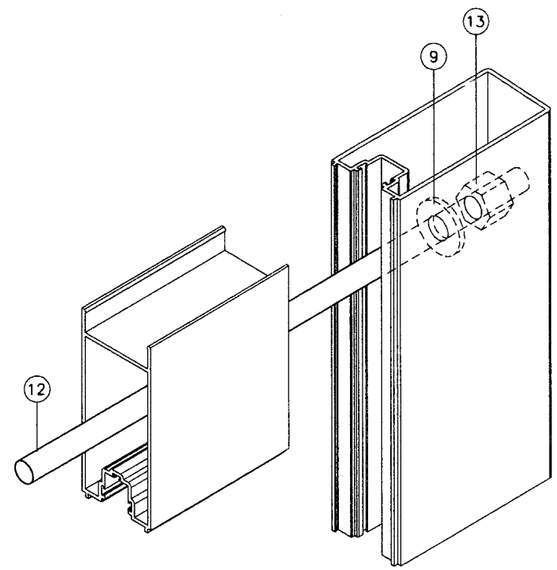

DOOR LEAF CORNER

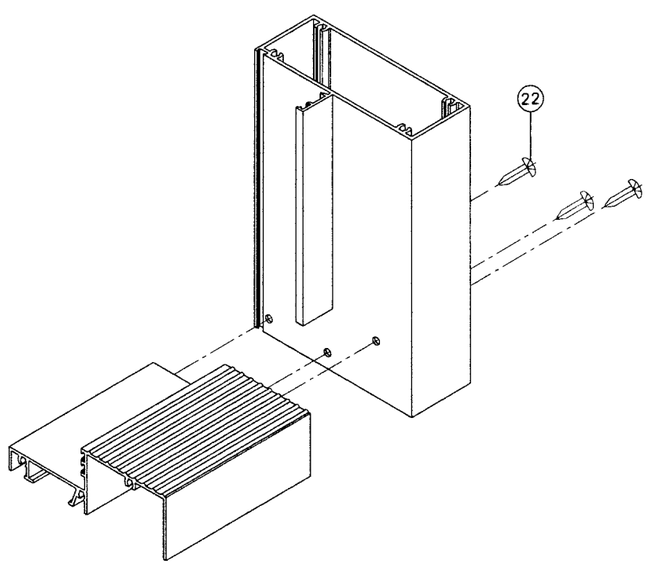

FRAME BOTTOM CORNER

Engr: ARSHAD VIQAR
CIVIL
FLA. PE # 38863
C.A.N. 3538

DEC 1 6 2009

PRODUCT RENEWED
as complying with the Florida Building Code
Acceptance No 10-0126.05
Expiration Date 04/29/2015
By
Miami Dade Product Control Division

AL-FAROOQ CORPORATION
ENGINEERS & PRODUCT DEVELOPMENT
1235 S.W. 87 AVE
MIAMI, FLORIDA 33174
TEL. (305) 264-8100 FAX. (305) 262-6978

COMP-ANL\W05-02

ALUMINUM OUTSWING FRENCH DOOR (N.I.)

AMERICAN ALUMINUM DOOR CORP.
2214 WEST 8 COURT
HIALEAH, FL. 33010
TEL. (305) 884-4316 FAX. (305) 884-4728

revisions:

no	date	by	description
A	12.10.09		UPDATED FOR 2007 FBC

date: 01-11-05
scale: 3/8" = 1"
dr. by: HAMID
chk. by:

drawing no.
W05-02

sheet 6 of 6