MIAMI-DADE COUNTY

BUILDING CODE COMPLIANCE OFFICE (BCCO)
PRODUCT CONTROL DIVISION

MIAMI–DADE COUNTY, FLORIDA
METRO–DADE FLAGLER BUILDING
140 WEST FLAGLER STREET, SUITE 1107
MIAMI, FLORIDA 33130–1563
(305) 375–2902 FAX (305) 372–6339

www.miamidade.gov/buildingcode

NOTICE OF ACCEPTANCE (NOA)

SMI Systems by Pande Pane LLC
11305 NW 128 Street
Medley, FL 33178

SCOPE:

This NOA is being issued under the applicable rules and regulations governing the use of construction materials. The documentation submitted has been reviewed by Miami–Dade County Product Control Division and accepted by the Board of Rules and Appeals (BORA) to be used in Miami–Dade County and other areas where allowed by the Authority Having Jurisdiction (AHJ).

This NOA shall not be valid after the expiration date stated below. The Miami–Dade County Product Control Division (In Miami–Dade County) and/or the AHJ (in areas other than Miami–Dade County) reserve the right to have this product or material tested for quality assurance purposes. If this product or material fails to perform in the accepted manner, the manufacturer will incur the expense of such testing and the AHJ may immediately revoke, modify, or suspend the use of such product or material within their jurisdiction. BORA reserves the right to revoke this acceptance, if it is determined by Miami–Dade County Product Control Division that this product or material fails to meet the requirements of the applicable building code.

This product is approved as described herein, and has been designed to comply with the Florida Building Code, including the High Velocity Hurricane Zone.

DESCRIPTION: Series "SMI–090" Aluminum Window Wall System – L.M.I.

APPROVAL DOCUMENT: Drawing No. **W09–24**, titled "**Series SMI–090 Aluminum Window Wall (L.M.I.)**", sheets 1 through 13 of 13, dated 04/16/09 with revision "**A**" dated 04/06/10, prepared by Al–Farooq Corporation, signed and sealed by Javad Ahmad, P. E., bearing the Miami–Dade County Product Control Approval stamp with the Notice of Acceptance number and Approval date by the Miami–Dade County Product Control Division.

MISSILE IMPACT RATING: Large and Small Missile Impact Resistant

LABELING: Each unit shall bear a permanent label with the manufacturer's name or logo, city, state and following statement: "Miami–Dade County Product Control Approved", unless otherwise noted herein.

RENEWAL of this NOA shall be considered after a renewal application has been filed and there has been no change in the applicable building code negatively affecting the performance of this product.

TERMINATION of this NOA will occur after the expiration date or if there has been a revision or change in the materials, use, and/or manufacture of the product or process. Misuse of this NOA as an endorsement of any product, for sales, advertising or any other purposes shall automatically terminate this NOA. Failure to comply with any section of this NOA shall be cause for termination and removal of NOA.

ADVERTISEMENT: The NOA number preceded by the words Miami–Dade County, Florida, and followed by the expiration date may be displayed in advertising literature. If any portion of the NOA is displayed, then it shall be done in its entirety.

INSPECTION: A copy of this entire NOA shall be provided to the user by the manufacturer or its distributors and shall be available for inspection at the job site at the request of the Building Official.

This NOA consists of this page 1 and evidence page E–1, as well as approval document mentioned above.

The submitted documentation was reviewed by **Jaime D. Gascon, P. E.**

MIAMI-DADE COUNTY APPROVED

J. Gascon
5/12/10

SMI Systems by Pande Pane LLC

NOTICE OF ACCEPTANCE: EVIDENCE SUBMITTED

A. DRAWINGS

1. Manufacturer's die drawings and sections.
2. Drawing No **W09–24**, titled "**Series SMI–090 Aluminum Window Wall (L.M.I.)**", sheets 1 through 13 of 13, dated 04/16/09 with revision "**A**" dated 04/06/10, prepared by Al–Farooq Corporation, signed and sealed by Javad Ahmad, P.E.

B. TESTS

1. Test reports on: 1) Air Infiltration Test, per FBC, TAS 202–94
   2) Uniform Static Air Pressure Test, Loading per FBC TAS 202–94
   3) Water Resistance Test, per FBC, TAS 202–94
   4) Large Missile Impact Test per FBC, TAS 201–94
   5) Cyclic Wind Pressure Loading per FBC, TAS 203–94
   6) Forced Entry Test, per FBC 2411 3.2.1, TAS 202–94

   along with marked–up drawings and installation diagram of window wall system, prepared by Fenestration Testing Laboratory, Inc., Test Report No. **FTL 5746**, dated January 27, 2009, signed and sealed by Carlos S. Rionda, P. E.

C. CALCULATIONS

1. Anchor verification calculations and structural analysis, complying with FBC–2007, prepared by Al–Farooq Corporation, dated January 12, 2010, signed and sealed by Javad Ahmad, P. E.
   Complies with ASTM E1300–98/ 04

D. QUALITY ASSURANCE

1. Miami–Dade Building Code Compliance Office (BCCO).

E. MATERIAL CERTIFICATIONS

1. Notice of Acceptance No. **08–0206.01** issued to Solutia Inc. for their **"Saflex HP Glass Interlayer"** dated 04/17/2008, expiring on 04/17/2013.
2. Notice of Acceptance No. **09–0310.02** issued to Cytec Industries, Inc. for their "**Uvekol S Laminated Glass Interlayer**", dated 04/02/09, expiring on 02/08/10.

F. STATEMENTS

1. Statement letter of conformance, dated April 07, 2010, signed and sealed by Javad Ahmad, P. E.
2. Laboratory compliance letter for Test Report No. **FTL 5746**, issued by Fenestration Testing Laboratory, Inc., dated January 27, 2009, signed and sealed by Carlos S. Rionda, P. E.

G. OTHERS

1. None.

Jaime D. Gascon, P. E.
Chief, Product Control Division
NOA No. 10–0128.03
Expiration Date: May 12, 2015
Approval Date: May 12, 2010

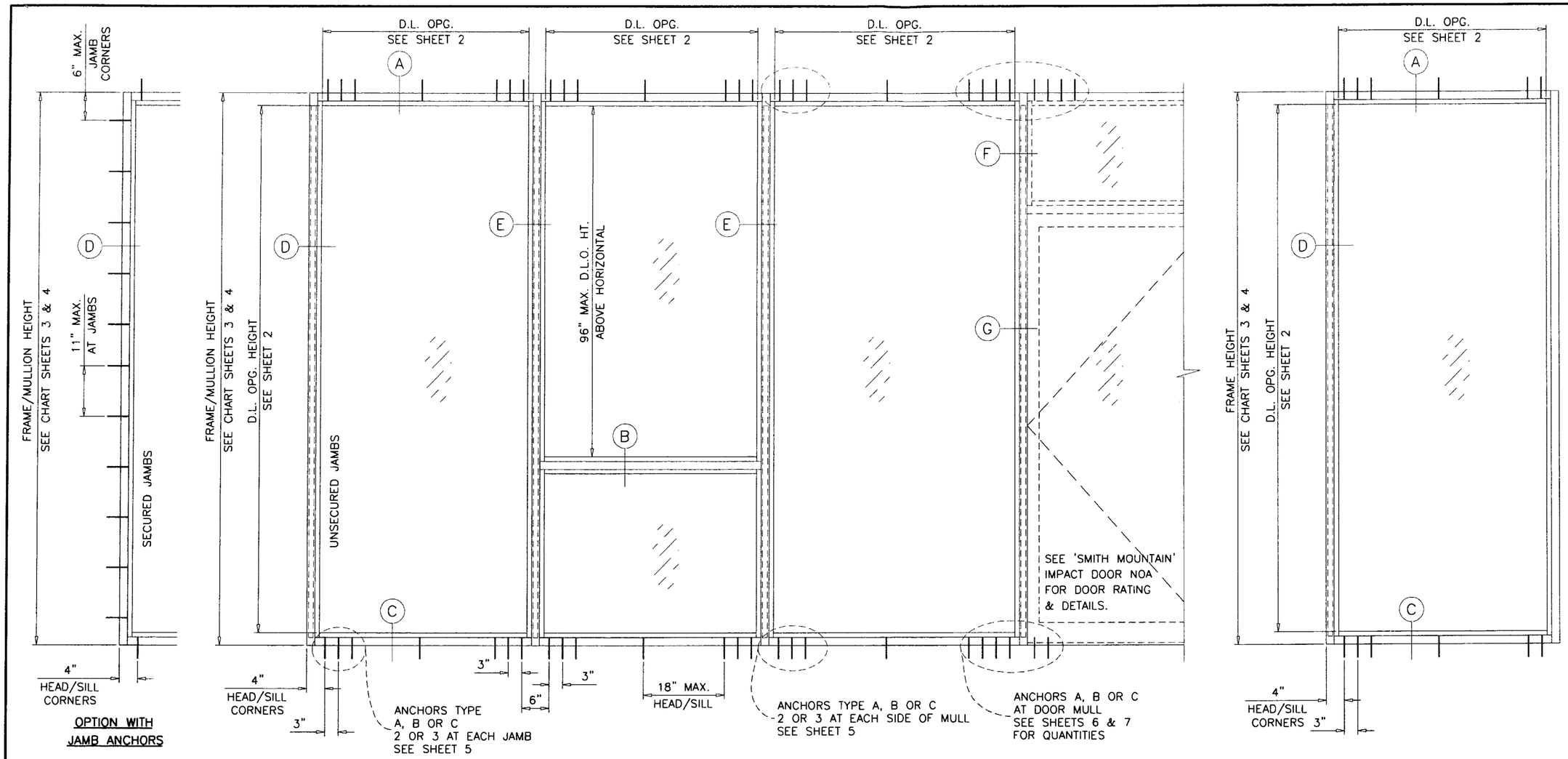

TYPICAL ELEVATIONS

SERIES SMI-090 ALUMINUM WINDOW WALL

THIS SYSTEM MAY BE USED IN CONJUNCTION WITH MIAMI-DADE COUNTY APPR'D LARGE MISSILE IMPACT RESISTANT DOORS. LOWER DESIGN PRESSURE FROM STOREFRONT OR DOOR APPROVAL WILL APPLY TO ENTIRE SYSTEM.

CODE REQUIREMENTS FOR SAFEGUARDS MUST BE OBSERVED.

THIS PRODUCT HAS BEEN DESIGNED AND TESTED TO COMPLY WITH THE REQUIREMENTS OF THE FLORIDA BUILDING CODE 2007 EDITION INCLUDING HIGH VELOCITY HURRICANE ZONE (HVHZ).

WOOD BUCKS BY OTHERS, MUST BE ANCHORED PROPERLY TO TRANSFER LOADS TO THE STRUCTURE.

ANCHORS SHALL BE AS LISTED, SPACED AS SHOWN ON DETAILS, ANCHORS EMBEDMENT TO BASE MATERIAL SHALL BE BEYOND WALL DRESSING OR STUCCO.

ANCHORING OR LOADING CONDITIONS NOT SHOWN IN THESE DETAILS ARE NOT PART OF THIS APPROVAL.

A LOAD DURATION INCREASE IS USED IN DESIGN OF ANCHORS INTO WOOD ONLY.

MATERIALS INCLUDING BUT NOT LIMITED TO STEEL/METAL SCREWS, THAT COME INTO CONTACT WITH OTHER DISSIMILAR MATERIALS SHALL MEET THE REQUIREMENTS OF 2007 FLORIDA BLDG. CODE SECTION 2003.8.4.

INSTRUCTIONS:

USE CHARTS AS FOLLOWS.

STEP 1 DETERMINE DESIGN WIND LOAD REQUIREMENT BASED ON WIND VELOCITY, BLDG. HEIGHT, WIND ZONE USING APPLICABLE ASCE 7 STANDARD.

STEP 2 SEE CHARTS ON SHEET 2 FOR DESIGN LOAD CAPACITY OF DESIRED GLASS SIZE.

STEP 3 CHECK MULLION CAPACITY FOR A GIVEN SPACING AND HEIGHT USING CHARTS ON SHEET 3 & 4 FOR STOREFRONT MULLION AND SHEET 6 & 7 FOR DOOR MULLION. THE CAPACITY SHOULD EXCEED THE DESIGN LOAD.

STEP 4 USING CHART ON SHEETS 5 SELECT ANCHOR OPTION WITH DESIGN RATING MORE THAN DESIGN LOAD SPECIFIED IN STEP 1 ABOVE.

STEP 5 THE LOWEST VALUE RESULTING FROM STEPS 2, 3 AND 4 SHALL APPLY TO ENTIRE SYSTEM.

SINGLE 'O' PANEL:
FRAME WIDTH = D.L.O. WIDTH + 5.500"
FRAME HEIGHT = D.L.O. HEIGHT + 5.500"
FOR ANCHORED JAMBS MAX. SIZES USE GLASS CHART ON SHEET 2.
FOR UNANCHORED JAMB FRAME USE CHARTS ON SHEETS 3 & 4.

THIS SYSTEM IS RATED FOR LARGE & SMALL MISSILE IMPACT. SHUTTERS ARE NOT REQUIRED.

Engr: JAVAD AHMAD
CIVIL
FLA. PE # 70592
C.A.N. 3538

APR 13 2010

Approved as complying with the Florida Building Code
Date 05/12/2010
NOA# 10-0128.03
Miami-Dade Product Control Division
By:

AL-FAROOQ CORPORATION
ENGINEERS & PRODUCT DEVELOPMENT
1235 S.W. 87 AVE
MIAMI, FLORIDA 33174
TEL. (305) 264-8100 FAX. (305) 262-6978

COMP-ANL\W09-24SM

SERIES SMI-090 ALUM WINDOW WALL (L.M.I.)

SMI SYSTEMS BY PANDE PANE, LLC.
11305 N.W. 128 STREET
MEDLEY, FL. 33178
TEL. (305) 888-6288 FAX. (305) 888-6289

revisions:			
no	date	by	description
A	04.06.10		REV. PER BCCO COMMENTS

date: 04-16-09
scale: 1/2"=1'-0"
dr. by: HAMID
chk. by:

drawing no. W09-24

GLASS LOAD CAPACITY - PSF		
NOMINAL DIMS.		GLASS TYPES 'A' & 'A1'
D.L.O. WIDTH	D.L.O. HEIGHT	EXT. (+) INT. (-)
30"	66-1/2"	90.0
36"		90.0
42"		90.0
48"		90.0
54"		90.0
60"		90.0
66-1/2"		90.0
30"	72-1/2"	90.0
36"		90.0
42"		90.0
48"		90.0
54"		90.0
60"		90.0
66"		90.0
30"	78-1/2"	90.0
36"		90.0
42"		90.0
48"		90.0
54"		90.0
60"		90.0
30"	84-1/2"	90.0
36"		90.0
42"		90.0
48"		90.0
54"		90.0
60"		90.0
30"	90-1/2"	90.0
36"		90.0
42"		90.0
48"		90.0
54"		90.0
30"	96-1/2"	90.0
36"		90.0
42"		90.0
48"		90.0
30"	102-1/2"	90.0
36"		90.0
42"		90.0
48"		90.0
30"	108"	90.0
36"		90.0
42"		90.0
44-1/4"		90.0
30"	114"	90.0
36"		90.0
42"		90.0
44-1/4"		90.0
30"	114-1/2"	90.0
36"		90.0
42"		90.0
44-1/4"		90.0

NOTE:
INTERPOLATION BETWEEN WIDTHS OR HEIGHTS ALLOWED.

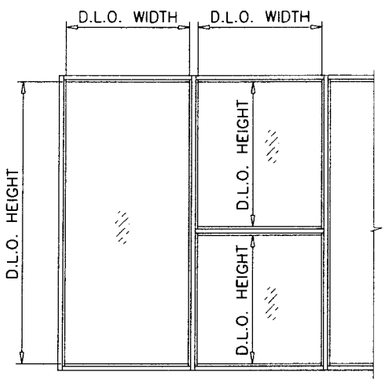

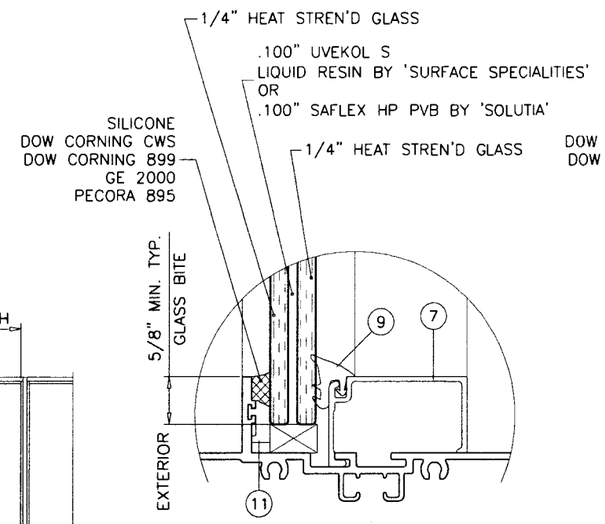

GLASS TYPE 'A'
9/16" OVERALL LAM. GLASS

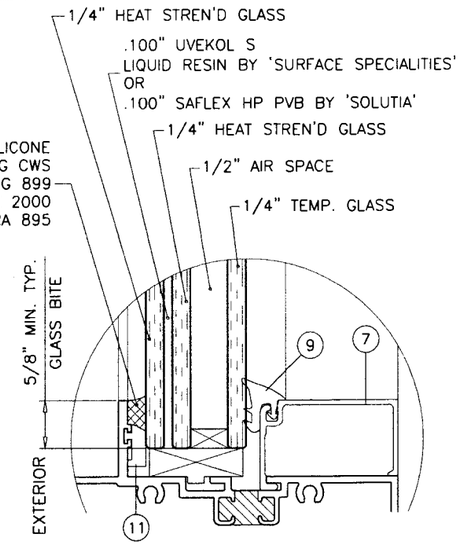

GLASS TYPE 'A1'
1-5/16" OVERALL LAM. INSUL. GLASS

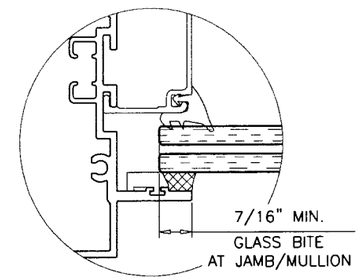

GLAZING OPTIONS
INTERIOR GLAZED

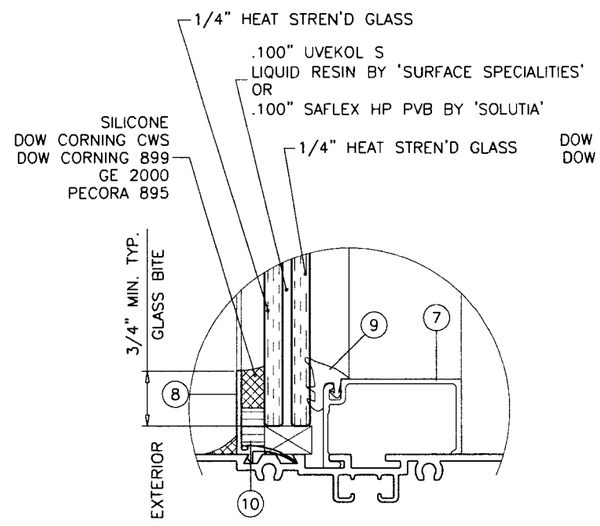

GLASS TYPE 'A'
9/16" OVERALL LAM. GLASS

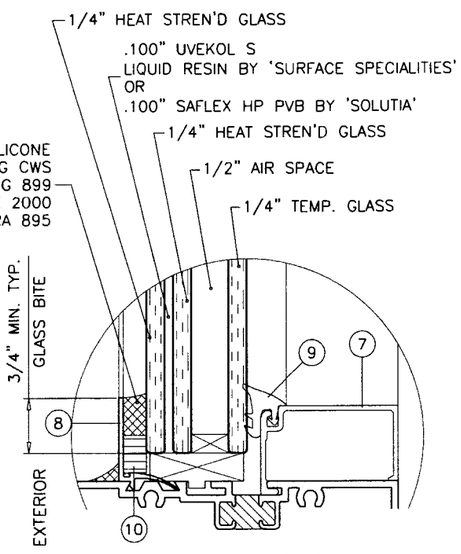

GLASS TYPE 'A1'
1-5/16" OVERALL LAM. INSUL. GLASS

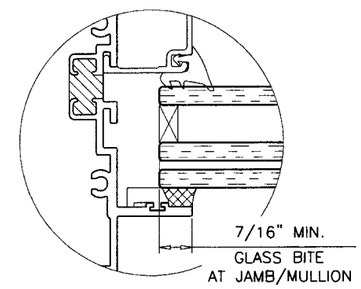

GLAZING OPTIONS
EXTERIOR GLAZED

NOTE:
WINDOW WALL FRAMES AT INSULATED GLASS OPTION MAY BE WITH OR WITHOUT THERMAL BREAK.

NOTE:
GLASS CAPACITIES ON THIS SHEET ARE BASED ON ASTM E1300-04 (3 SEC. GUSTS).

GLASS

Engr: JAVAD AHMAD
CIVIL
FLA. PE # 70593
C.A.N. 3538
APR 13 2010

Approved as complying with the Florida Building Code
Date 05/12/2010
NOA# 10-0128.03
Miami-Dade Product Control

AL-FAROOQ CORPORATION
ENGINEERS & PROJECT DEVELOPMENT
1235 S.W. 87 AVE
MIAMI, FLORIDA 33174
TEL. (305) 264-8100 FAX. (305) 262-6978
COMP-ANL\W09-24SM

SERIES SMI-090 ALUM WINDOW WALL (L.M.I.)

SMI SYSTEMS BY PANDE PANE, LLC.
11305 N.W. 128 STREET
MEDLEY, FL. 33178
TEL. (305) 888-6288 FAX. (305) 888-6289

revisions:

no	date	by	description
A	04.06.10		REV. PER BCCO COMMENTS

date: 04-16-09
scale: 1/2" = 1"
dr. by: HAMID
chk. by:

drawing no.
W09-24

DESIGN LOAD CAPACITY - PSF
JAMB/MULLION WITHOUT INTERMEDIATE HORIZONTALS

NOMINAL DIMS.		JAMB 'J1' MULLION 'M1'	JAMB 'J2' MULLION 'M2'	JAMB 'J3/J4' MULL 'M3/M4'
WIDTH (W)	FRAME HEIGHT	EXT. (+) INT. (−)	EXT. (+) INT. (−)	EXT. (+) INT. (−)
30"	78"	50.0	90.0	90.0
36"		50.0	90.0	90.0
42"		50.0	90.0	90.0
48"		50.0	90.0	90.0
54"		50.0	90.0	90.0
60"		50.0	90.0	90.0
30"	84"	50.0	90.0	90.0
36"		50.0	90.0	90.0
42"		50.0	90.0	90.0
48"		50.0	90.0	90.0
54"		50.0	90.0	90.0
60"		–	90.0	90.0
30"	90"	50.0	90.0	90.0
36"		50.0	90.0	90.0
42"		50.0	90.0	90.0
48"		50.0	90.0	90.0
54"		50.0	90.0	90.0
60"		–	90.0	90.0
30"	96"	50.0	90.0	90.0
36"		50.0	90.0	90.0
42"		50.0	90.0	90.0
48"		50.0	90.0	90.0
54"		–	90.0	90.0
60"		–	90.0	90.0
30"	102"	–	90.0	90.0
36"		–	90.0	90.0
42"		–	90.0	90.0
48"		–	90.0	90.0
54"		–	–	80.0
30"	108"	–	90.0	90.0
36"		–	90.0	90.0
42"		–	90.0	90.0
48"		–	87.5	87.5
54"		–	–	80.0
30"	114"	–	–	80.0
36"		–	–	80.0
42"		–	–	80.0
48"		–	–	80.0
30"	120"	–	–	80.0
36"		–	–	80.0
42"		–	–	80.0
48"		–	–	76.0

NOTE:
INTERPOLATION BETWEEN WIDTHS OR HEIGHTS ALLOWED.

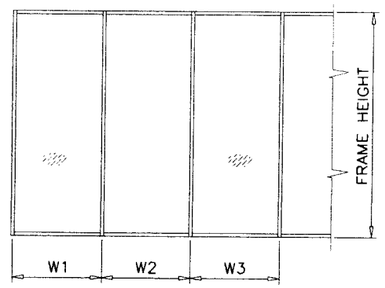

WIDTH (W) = W1
AT FRAME JAMB

WIDTH (W) = $\frac{W2 + W3}{2}$
AT FRAME MULLION

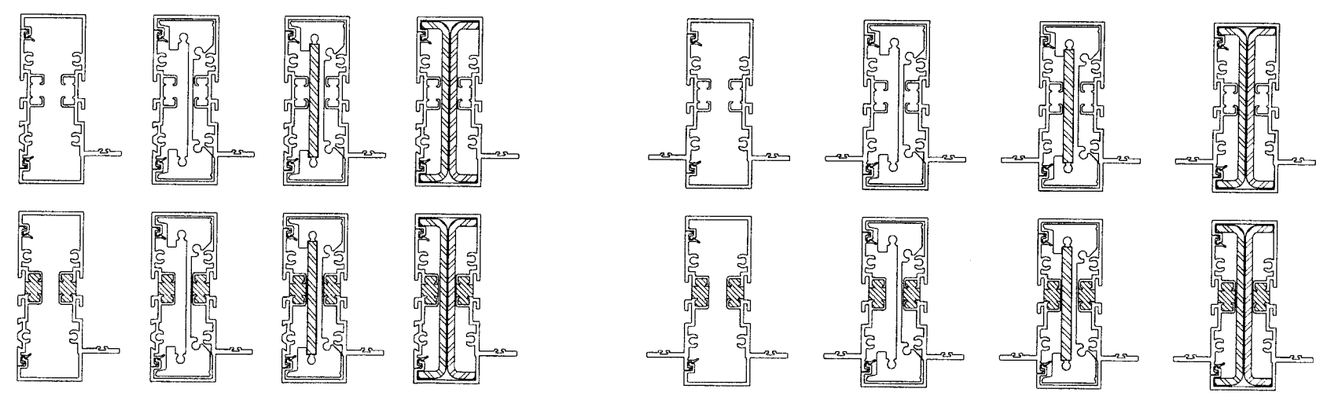

JAMB 'J1' JAMB 'J2' JAMB 'J3' JAMB 'J4' MULLION 'M1' MULLION 'M2' MULLION 'M3' MULLION 'M4'

MULLIONS

Engr: JAVAD AHMAD
CIVIL
FLA. PE # 70592
C.A.N. 3538

APR 1 3 2010

Approved as complying with the Florida Building Code
Date 05/12/2010
NOAC 10-0128.03
Miami-Dade Product Control Division
By

AL-FAROOQ CORPORATION
ENGINEERS & PRODUCT DEVELOPMENT
1235 S.W. 87 AVE
MIAMI, FLORIDA 33174
TEL. (305) 264-8100 FAX. (305) 262-6978

COMP-ANL \W09-24SM

SERIES SMI-090 ALUM WINDOW WALL (L.M.I.)

SMI SYSTEMS BY PANDE PANE, LLC.
11305 N.W. 128 STREET
MEDLEY, FL. 33178
TEL. (305) 888-6288 FAX. (305) 888-6289

revisions:

no	date	by	description
A	04.06.10		NO CHANGE THIS SHEET

date: 04-16-09
scale: –
dr. by: HAMID
chk. by:

drawing no.
W09-24

DESIGN LOAD CAPACITY - PSF JAMB/MULLION WITH INTERMEDIATE HORIZONTALS				
NOMINAL DIMS.		JAMB 'J1' MULLION 'M1'	JAMB 'J2' MULLION 'M2'	JAMB 'J3/J4' MULL 'M3/M4'
WIDTH (W)	FRAME HEIGHT	EXT. (+) INT. (−)	EXT. (+) INT. (−)	EXT. (+) INT. (−)
30"	78"	50.0	90.0	90.0
36"		50.0	90.0	90.0
42"		50.0	90.0	90.0
48"		50.0	90.0	90.0
54"		50.0	90.0	90.0
60"		50.0	90.0	90.0
30"	84"	50.0	90.0	90.0
36"		50.0	90.0	90.0
42"		50.0	90.0	90.0
48"		50.0	90.0	90.0
54"		50.0	90.0	90.0
60"		–	90.0	90.0
30"	90"	50.0	90.0	90.0
36"		50.0	90.0	90.0
42"		50.0	90.0	90.0
48"		50.0	90.0	90.0
54"		50.0	90.0	90.0
60"		–	90.0	90.0
30"	96"	50.0	90.0	90.0
36"		50.0	90.0	90.0
42"		50.0	90.0	90.0
48"		49.2	90.0	90.0
54"		–	90.0	90.0
60"		–	–	80.0
30"	102"	–	90.0	90.0
36"		–	90.0	90.0
42"		–	90.0	90.0
48"		–	90.0	90.0
54"		–	–	80.0
30"	108"	–	90.0	90.0
36"		–	90.0	90.0
42"		–	90.0	90.0
48"		–	81.9	85.0
30"	114"	–	–	80.0
36"		–	–	80.0
42"		–	–	80.0
48"		–	–	80.0
30"	120"	–	–	80.0
36"		–	–	80.0
42"		–	–	80.0
48"		–	–	72.1

NOTE:
INTERPOLATION BETWEEN WIDTHS OR HEIGHTS ALLOWED.

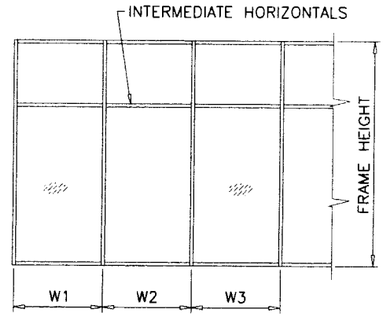

WIDTH (W) = W1
AT FRAME JAMB

WIDTH (W) = $\frac{W2 + W3}{2}$
AT FRAME MULLION

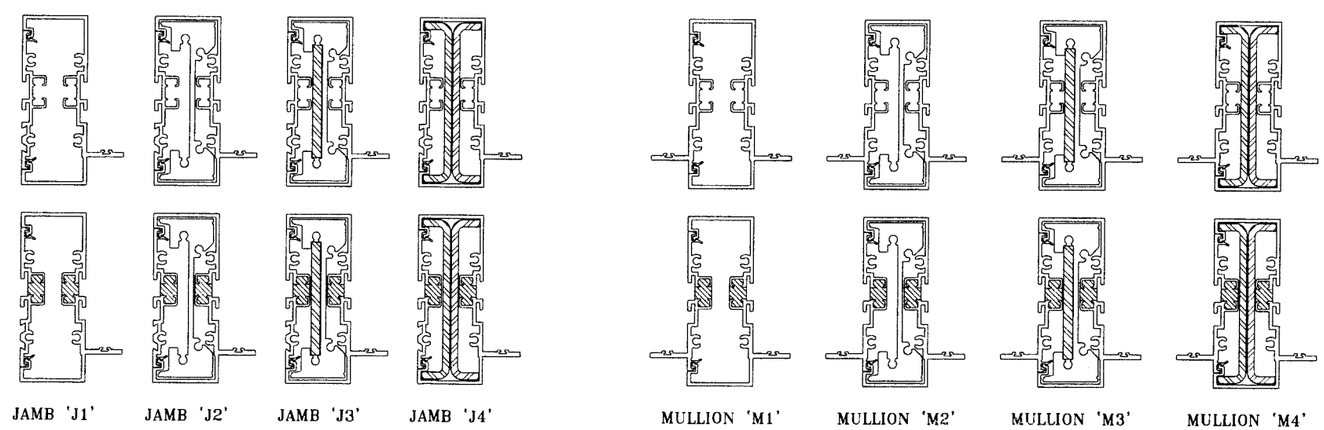

MULLIONS

Engr: JAVAD AHMAD
CIVIL
FLA. PE # 70592
C.A.N. 3538

APR 1 3 2010

Approved as complying with the Florida Building Code
Date: 05/12/2010
NOA# 10-0123.03
Miami-Dade Product Control
Evaluator
By:

AL-FAROOQ CORPORATION
ENGINEERS & PRODUCT DEVELOPMENT
1235 S.W. 87 AVE
MIAMI, FLORIDA 33174
TEL. (305) 264-8100 FAX. (305) 262-6978

COMP-ANL\W09-24SM

SERIES SMI-090 ALUM WINDOW WALL (L.M.I.)

SMI SYSTEMS BY PANDE PANE, LLC.
11305 N.W. 128 STREET
MEDLEY, FL. 33178
TEL. (305) 888-6288 FAX. (305) 888-6289

revisions:

no	date	by	description
A	04.06.10		NO CHANGE THIS SHEET

date: 04-16-09
scale: –
dr. by: HAMID
chk. by:

drawing no.
W09-24

ANCHOR LOAD CAPACITY – PSF EXT.(+) & INT.(–)						
NOMINAL DIMS.		ANCHORS TYPE 'A'		ANCHORS TYPE 'B'		TYPE 'C'
WIDTH (W)	FRAME HEIGHT	A2	A3	B2	B3	C2
30"	60"	90.0	90.0	90.0	90.0	90.0
36"		90.0	90.0	90.0	90.0	90.0
42"		90.0	90.0	90.0	90.0	90.0
48"		90.0	90.0	90.0	90.0	90.0
54"		90.0	90.0	90.0	90.0	90.0
60"		90.0	90.0	90.0	90.0	90.0
30"	66"	90.0	90.0	90.0	90.0	90.0
36"		90.0	90.0	90.0	90.0	90.0
42"		90.0	90.0	90.0	90.0	90.0
48"		90.0	90.0	90.0	90.0	90.0
54"		90.0	90.0	90.0	90.0	90.0
60"		85.5	90.0	90.0	90.0	90.0
30"	72"	90.0	90.0	90.0	90.0	90.0
36"		90.0	90.0	90.0	90.0	90.0
42"		90.0	90.0	90.0	90.0	90.0
48"		90.0	90.0	90.0	90.0	90.0
54"		87.1	90.0	90.0	90.0	90.0
60"		78.4	90.0	90.0	90.0	90.0
30"	78"	90.0	90.0	90.0	90.0	90.0
36"		90.0	90.0	90.0	90.0	90.0
42"		90.0	90.0	90.0	90.0	90.0
48"		90.0	90.0	90.0	90.0	90.0
54"		80.4	90.0	90.0	90.0	90.0
60"		72.4	90.0	88.6	90.0	90.0
30"	84"	90.0	90.0	90.0	90.0	90.0
36"		90.0	90.0	90.0	90.0	90.0
42"		90.0	90.0	90.0	90.0	90.0
48"		84.0	90.0	90.0	90.0	90.0
54"		74.7	90.0	90.0	90.0	90.0
60"		67.2	90.0	82.3	90.0	90.0
30"	90"	90.0	90.0	90.0	90.0	90.0
36"		90.0	90.0	90.0	90.0	90.0
42"		89.6	90.0	90.0	90.0	90.0
48"		78.4	90.0	90.0	90.0	90.0
54"		69.7	90.0	85.3	90.0	90.0
60"		62.7	90.0	76.8	90.0	90.0
30"	96"	90.0	90.0	90.0	90.0	90.0
36"		90.0	90.0	90.0	90.0	90.0
42"		84.0	90.0	90.0	90.0	90.0
48"		73.5	90.0	90.0	90.0	90.0
54"		65.3	90.0	80.0	90.0	90.0
60"		58.8	88.2	72.0	90.0	90.0
30"	102"	90.0	90.0	90.0	90.0	90.0
36"		90.0	90.0	90.0	90.0	90.0
42"		79.1	90.0	90.0	90.0	90.0
48"		69.2	90.0	84.7	90.0	90.0
54"		61.5	90.0	75.3	90.0	90.0
30"	108"	90.0	90.0	90.0	90.0	90.0
36"		87.1	90.0	90.0	90.0	90.0
42"		74.7	90.0	90.0	90.0	90.0
48"		65.3	90.0	80.0	90.0	90.0
30"	114"	90.0	90.0	90.0	90.0	90.0
36"		82.5	90.0	90.0	90.0	90.0
42"		70.7	90.0	86.6	90.0	90.0
48"		61.9	90.0	75.8	90.0	90.0
30"	120"	90.0	90.0	90.0	90.0	90.0
36"		78.4	90.0	90.0	90.0	90.0
42"		67.2	90.0	82.3	90.0	90.0
48"		58.8	88.2	72.0	90.0	90.0

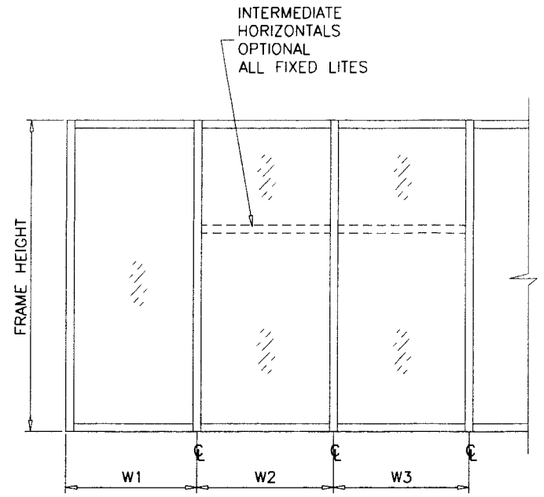

WIDTH (W) = W1
AT FRAME JAMB

WIDTH (W) = $\frac{W2 + W3}{2}$
AT FRAME MULLION

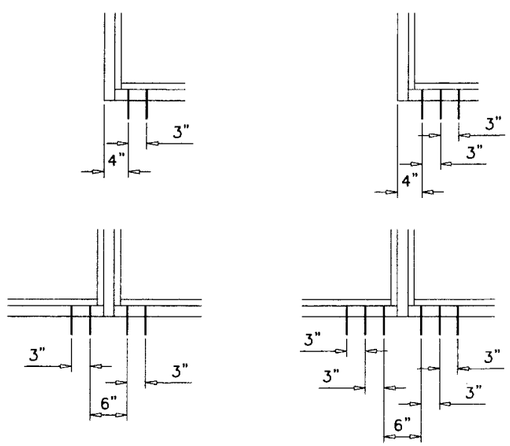

A2, B2, C2 A3, B3

ANCHORS TYPES:

A2 = (2) ANCHORS TYPE 'A' AT EACH SIDE OF JAMB AND MULLION
B2 = (2) ANCHORS TYPE 'B' AT EACH SIDE OF JAMB AND MULLION
C2 = (2) ANCHORS TYPE 'C' AT EACH SIDE OF JAMB AND MULLION

A3 = (3) ANCHORS TYPE 'A' AT EACH SIDE OF JAMB AND MULLION
B3 = (3) ANCHORS TYPE 'B' AT EACH SIDE OF JAMB AND MULLION

WOOD BUCKS AND METAL STRUCTURES NOT BY SMITH MOUNTAIN MUST SUPPORT LOADS IMPOSED BY GLAZING SYSTEM AND TRANSFER THEM TO THE BUILDING STRUCTURE.

TYPICAL ANCHORS: SEE ELEV. FOR SPACING

TYPE 'A'

1/4" DIA ULTRACON BY 'ELCO' (Fu=177 KSI, Fy=155 KSI)
INTO 2BY WOOD BUCKS OR WOOD STRUCTURES
WITH 1-3/8" MIN. PENETRATION INTO WOOD

THRU 1BY WOOD BUCKS INTO CONCRETE
WITH 1-1/4" MIN. EMBED INTO CONCRETE

ANCHOR EDGE DISTANCES
INTO CONCRETE = 2-1/2" MIN.
INTO WOOD STRUCTURE = 1" MIN.

TYPE 'B'

1/4" DIA ULTRACON BY 'ELCO' (Fu=177 KSI, Fy=155 KSI)
DIRECTLY INTO CONCRETE
WITH 1-1/4" MIN. EMBED INTO CONC.

ANCHOR EDGE DISTANCES
INTO CONCRETE = 2-1/2" MIN.

TYPE 'C'

#14 SMS OR SELF DRILLING SCREWS ST/ST (GRADE 2 CRS)
INTO METAL STRUCTURES
STEEL : 12 GA. MIN. (Fy = 36 KSI MIN.)
ALUMINUM : 1/8" THK. MIN. (6063-T5 MIN.)
(STEEL IN CONTACT WITH ALUMINUM TO BE PLATED OR PAINTED)

ANCHOR EDGE DISTANCES
INTO METAL STRUCTURE = 3/4" MIN.

CONCRETE AT HEAD, SILL OR JAMBS f'c = 3000 PSI MIN.
C-90 HOLLOW/FILLED BLOCK AT JAMBS f'm = 2000 PSI MIN.

ANCHORS

Engr: JAVAD AHMAD
CIVIL
FLA. PE # 70592
C.A.N. 3538

APR 1 3 2010

Approved as complying with the Florida Building Code
Date 05/12/2010
NOA# 10-0128.03
Miami-Dade Product Control
By:

AL-FAROOQ CORPORATION
ENGINEERS & PRODUCT DEVELOPMENT
1235 S.W. 87 AVE
MIAMI, FLORIDA 33174
TEL. (305) 264-8100 FAX. (305) 262-6978
COMP-ANL\W09-24SM

SERIES SMI-090 ALUM WINDOW WALL (L.M.I.)

SMI SYSTEMS BY PANDE PANE, LLC.
11305 N.W. 128 STREET
MEDLEY, FL. 33178
TEL. (305) 888-6288 FAX. (305) 888-6289

revisions:

no	date	by	description
A	04.06.10		NO CHANGE THIS SHEET

date: 04-16-09
scale: 1/2" = 1"
dr. by: HAMID
chk. by:

drawing no.
W09-24

DOOR MULLION LOAD CAPACITY		
NOMINAL DIMS.		W/O REINF.
WIDTH (W)	FRAME HEIGHT	EXT.(+) & INT.(-)
30"	81-3/4"	90.0
36"		90.0
42"		90.0
48"		90.0
30"	85-3/4"	90.0
36"		90.0
42"		90.0
48"		90.0
30"	91-3/4"	90.0
36"		90.0
42"		90.0
30"	96-3/4"	90.0
36"		90.0
42"		90.0
30"	97-3/4"	90.0
36"		90.0
42"		90.0

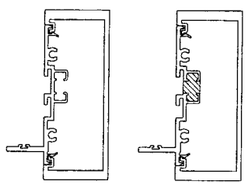

DOOR MULLION
WITHOUT REINFORCING

DOOR MULLION LOAD CAPACITY		
NOMINAL DIMS.		WITH REINF.
WIDTH (W)	FRAME HEIGHT	EXT.(+) & INT.(-)
24"	80"	90.0
30"		90.0
36"		90.0
42"		90.0
48"		90.0
54"		90.0
60"		90.0
24"	84"	90.0
30"		90.0
36"		90.0
42"		90.0
48"		90.0
54"		90.0
60"		90.0
24"	90"	90.0
30"		90.0
36"		90.0
42"		90.0
48"		90.0
54"		90.0
24"	96"	90.0
30"		90.0
36"		90.0
42"		90.0
48"		90.0
24"	102"	90.0
30"		90.0
36"		90.0
42"		90.0
48"		90.0
24"	108"	90.0
30"		90.0
36"		90.0
42"		90.0
24"	114"	80.0
30"		80.0
36"		80.0
42"		80.0
24"	120"	80.0
30"		80.0
36"		80.0
42"		80.0

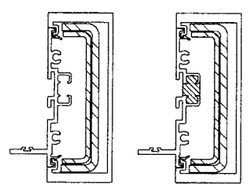

DOOR MULLION
WITH REINFORCING

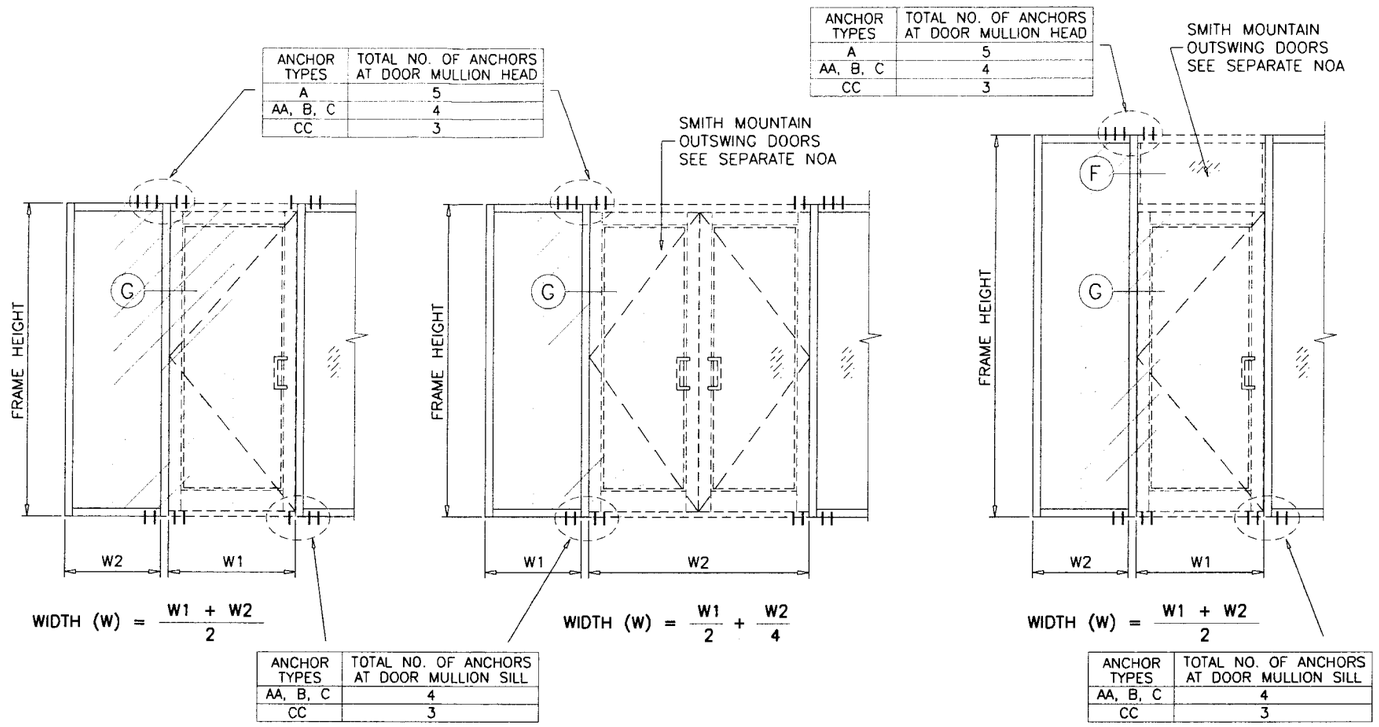

ANCHOR TYPES	TOTAL NO. OF ANCHORS AT DOOR MULLION HEAD
A	5
AA, B, C	4
CC	3

$$\text{WIDTH (W)} = \frac{W1 + W2}{2}$$

ANCHOR TYPES	TOTAL NO. OF ANCHORS AT DOOR MULLION SILL
AA, B, C	4
CC	3

$$\text{WIDTH (W)} = \frac{W1}{2} + \frac{W2}{4}$$

ANCHOR TYPES	TOTAL NO. OF ANCHORS AT DOOR MULLION HEAD
A	5
AA, B, C	4
CC	3

$$\text{WIDTH (W)} = \frac{W1 + W2}{2}$$

ANCHOR TYPES	TOTAL NO. OF ANCHORS AT DOOR MULLION SILL
AA, B, C	4
CC	3

DOOR MULLION

Engr: JAVAD AHMAD
CIVIL
FLA. PE # 70592
C.A.N. 3538

APR 1 3 2010

Approved as complying with the Florida Building Code
Date 05/12/2010
UGA# 10-0128.03
Miami Dade Product Control Division
By

afc
AL-FAROOQ CORPORATION
ENGINEERS & PRODUCT DEVELOPMENT
1235 S.W. 87 AVE
MIAMI, FLORIDA 33174
TEL. (305) 264-8100 FAX. (305) 262-6978
COMP-ANL\W09-24SM

SERIES SMI-090 ALUM WINDOW WALL (L.M.I.)

SMI SYSTEMS BY PANDE PANE, LLC.
11305 N.W. 128 STREET
MEDLEY, FL. 33178
TEL. (305) 888-6288 FAX. (305) 888-6289

revisions:

no	date	by	description
A	04.06.10		REV. PER BCCO COMMENTS

date: 04-16-09
scale: 1/2" = 1"
dr. by: HAMID
chk. by:

drawing no.
W09-24

DOOR MULLION LOAD CAPACITY – PSF

NOMINAL DIMS.				WITH REINF.
FRAME HEIGHT INCHES	DOOR HEIGHT INCHES	WIDTH (W1) INCHES	WIDTH (W2) INCHES	EXT. (+) INT. (–)
108	80	60	30	90.0
			33	90.0
			39	90.0
			42	90.0
		72	30	90.0
			33	90.0
			39	90.0
			42	90.0
		84	30	90.0
			33	90.0
			39	90.0
			42	90.0
		96	30	90.0
			33	90.0
			39	90.0
			42	90.0
114	80	60	30	80.0
			33	80.0
			39	80.0
			42	80.0
		72	30	80.0
			33	80.0
			39	80.0
			42	80.0
		84	30	80.0
			33	80.0
			39	80.0
			42	80.0
		96	30	80.0
			33	80.0
			39	80.0
120	80	60	30	80.0
			33	80.0
			39	80.0
			42	80.0
		72	30	80.0
			33	80.0
			39	80.0
			42	80.0
		84	30	80.0
			33	80.0
			39	80.0
			42	80.0
		96	30	80.0
			33	80.0

DOOR MULLION LOAD CAPACITY – PSF

NOMINAL DIMS.				WITH REINF.
FRAME HEIGHT INCHES	DOOR HEIGHT INCHES	WIDTH (W1) INCHES	WIDTH (W2) INCHES	EXT. (+) INT. (–)
108	84	60	30	90.0
			33	90.0
			39	90.0
			42	90.0
		72	30	90.0
			33	90.0
			39	90.0
			42	90.0
		84	30	90.0
			33	90.0
			39	90.0
			42	90.0
		96	30	90.0
			33	90.0
			39	90.0
			42	90.0
114	84	60	30	80.0
			33	80.0
			39	80.0
			42	80.0
		72	30	80.0
			33	80.0
			39	80.0
			42	80.0
		84	30	80.0
			33	80.0
			39	80.0
			42	80.0
		96	30	80.0
			33	80.0
			39	80.0
120	84	60	30	80.0
			33	80.0
			39	80.0
			42	80.0
		72	30	80.0
			33	80.0
			39	80.0
			42	80.0
		84	30	80.0
			33	80.0
			39	80.0
			42	80.0
		96	30	80.0
			33	80.0

DOOR MULLION LOAD CAPACITY – PSF

NOMINAL DIMS.				WITH REINF.
FRAME HEIGHT INCHES	DOOR HEIGHT INCHES	WIDTH (W1) INCHES	WIDTH (W2) INCHES	EXT. (+) INT. (–)
114	96	60	30	80.0
			33	80.0
			39	80.0
			42	80.0
		72	30	80.0
			33	80.0
			39	80.0
			42	80.0
		84	30	80.0
			33	80.0
			39	80.0
			42	80.0
		96	30	80.0
			33	80.0
			39	80.0
120	96	60	30	80.0
			33	80.0
			39	80.0
			42	80.0
		72	30	80.0
			33	80.0
			39	80.0
			42	80.0
		84	30	80.0
			33	80.0
			39	80.0
			42	80.0
		96	30	80.0
			33	80.0

DOOR MULLION LOAD CAPACITY – PSF

NOMINAL DIMS.				WITH REINF.
FRAME HEIGHT INCHES	DOOR HEIGHT INCHES	WIDTH (W1) INCHES	WIDTH (W2) INCHES	EXT. (+) INT. (–)
120	108	60	30	80.0
			33	80.0
			39	80.0
			42	80.0
		72	30	80.0
			33	80.0
			39	80.0
			42	80.0
		84	30	80.0
			33	80.0
			39	80.0
			42	80.0
		96	30	80.0
			33	80.0

ANCHOR TYPES	TOTAL NO. OF ANCHORS AT DOOR MULLION HEAD
A	8
AA, B, C	6
CC	4

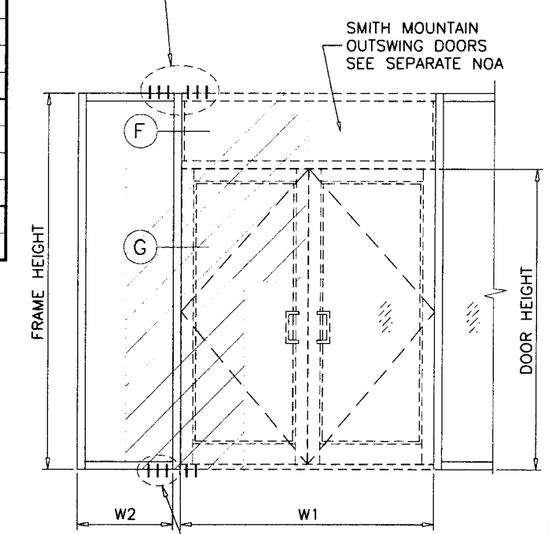

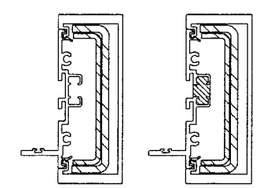

DOOR MULLION
WITH REINFORCING

ANCHOR TYPES	TOTAL NO. OF ANCHORS AT DOOR MULLION SILL
AA, B, C	6
CC	4

Engr: JAVAD AHMAD
CIVIL
FLA. PE # 70592
C.A.N. 3538

APR 1 3 2010

Approved as complying with the Florida Building Code
Date 05/12/2010
NOA# 10-0128.03
Miami-Dade Product Control Division
By

DOOR MULLION

AL-FAROOQ CORPORATION
ENGINEERS & PRODUCT DEVELOPMENT
1235 S.W. 87 AVE
MIAMI, FLORIDA 33174
TEL. (305) 264-8100 FAX. (305) 262-6978

COMP-ANL\W09-24SM

SERIES SMI-090 ALUM WINDOW WALL (L.M.I.)

SMI SYSTEMS BY PANDE PANE, LLC.
11305 N.W. 128 STREET
MEDLEY, FL. 33178
TEL. (305) 888-6288 FAX. (305) 888-6289

revisions:

no	date	by	description
A	04.06.10		REV. PER BCCO COMMENTS

date: 04-16-09
scale: 1/2" = 1"
dr. by: HAMID
chk. by:

drawing no.
W09-24

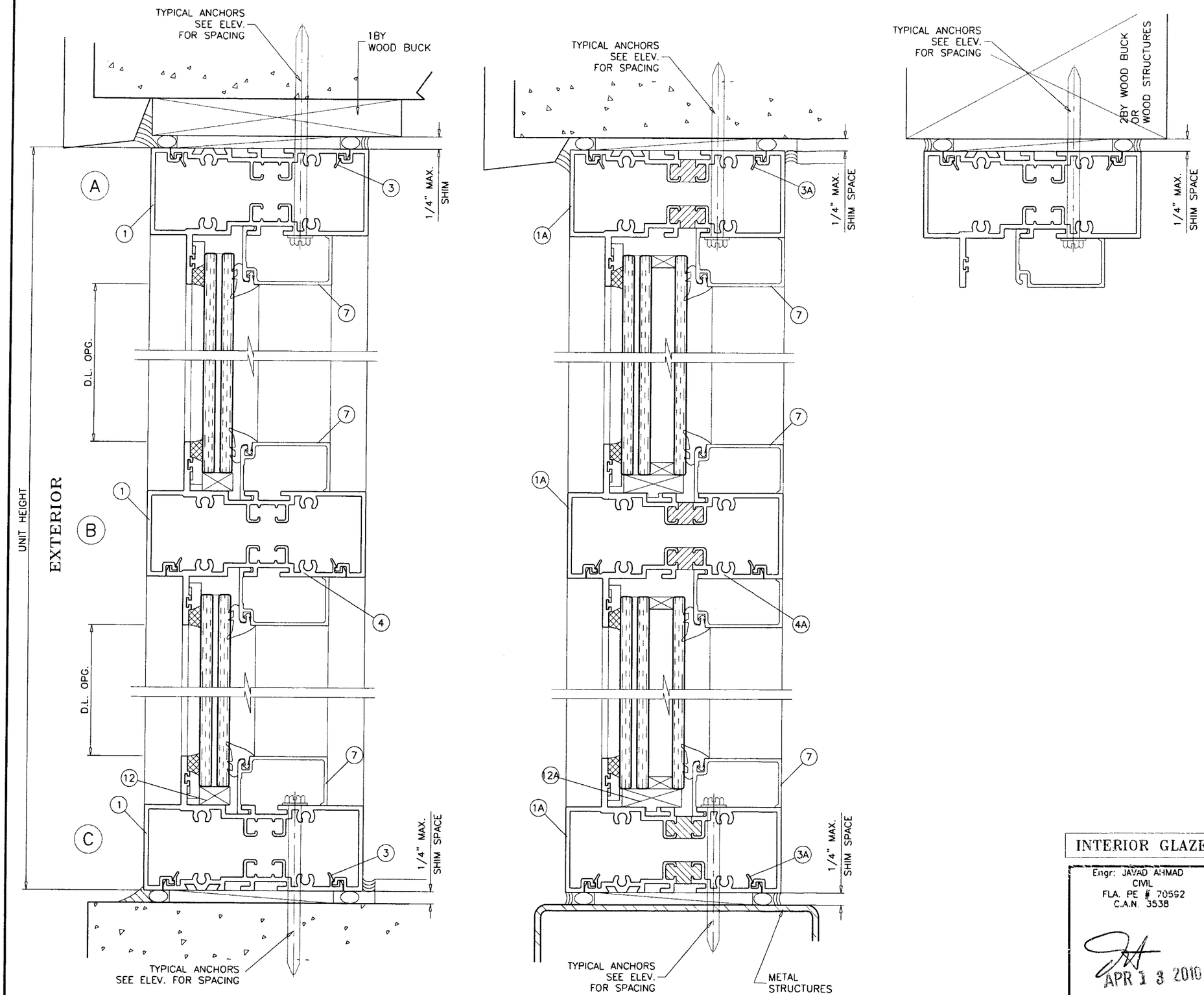

INTERIOR GLAZED

Engr: JAVAD AHMAD
CIVIL
FLA. PE # 70592
C.A.N. 3538

APR 1 3 2010

Approved as complying with the Florida Building Code
Date 05/12/2010
NOAA 10-0128.03
Miami-Dade Product Control Division
By

AL-FAROOQ CORPORATION
ENGINEERS & PRODUCT DEVELOPMENT
1235 S.W. 87 AVE
MIAMI, FLORIDA 33174
TEL. (305) 264-8100 FAX. (305) 262-6978

COMP-ANL\W09-24SM

SERIES SMI-090 ALUM WINDOW WALL (L.M.I.)

SMI SYSTEMS BY PANDE PANE, LLC.
11305 N.W. 128 STREET
MEDLEY, FL. 33178
TEL. (305) 888-6288 FAX. (305) 888-6289

revisions:

no	date	by	description
A	04.06.10		NO CHANGE THIS SHEET

date: 04-16-09
scale: 1/2" = 1"
dr. by: HAMID
chk. by:

drawing no.
W09-24

sheet 8 of 13

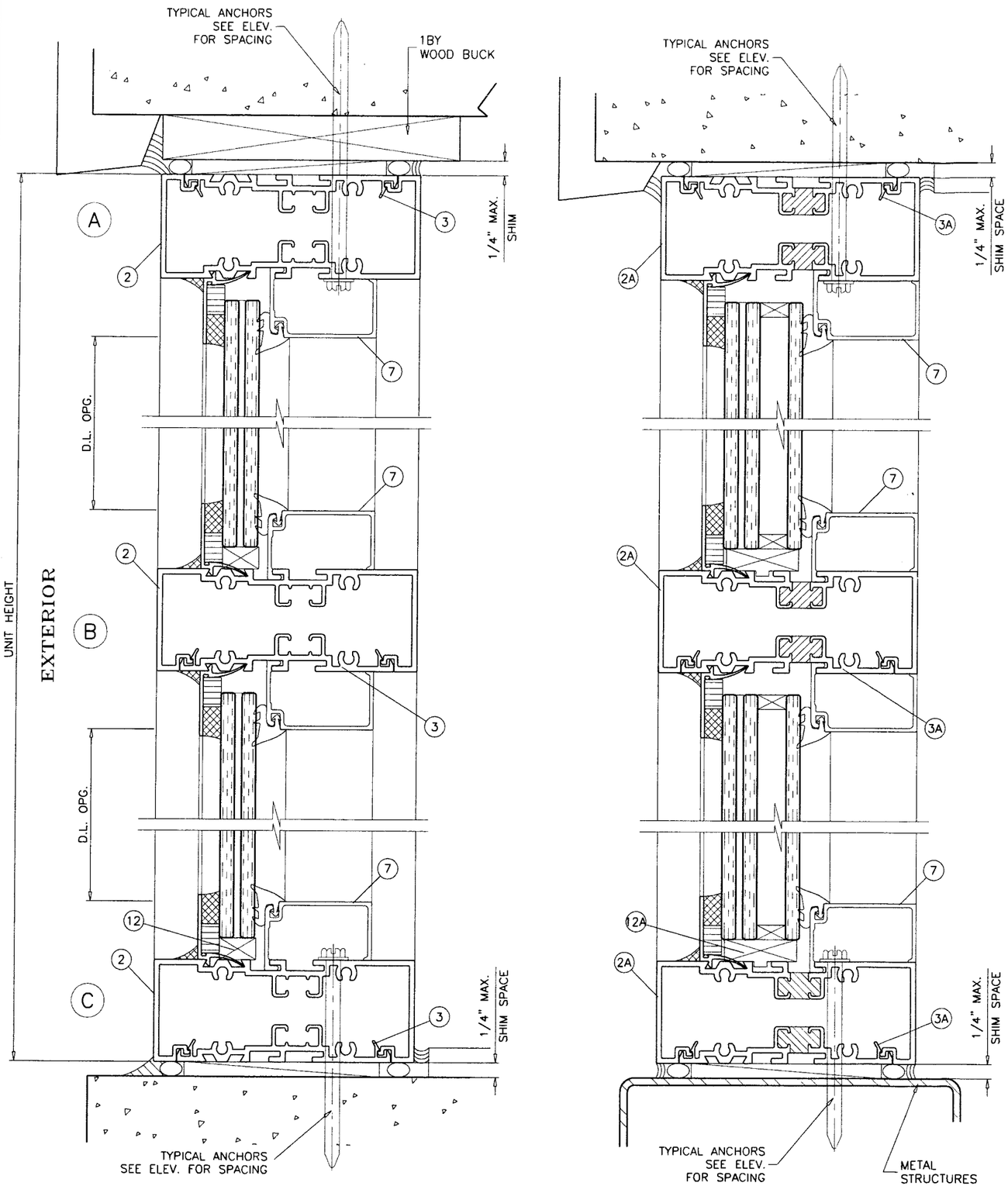

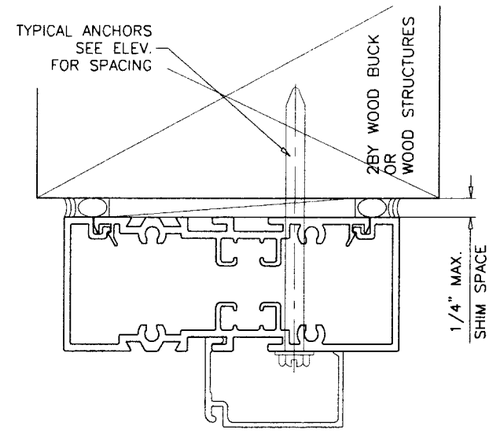

EXTERIOR GLAZED

Engr: JAVAD AHMAD
CIVIL
FLA. PE # 70592
C.A.N. 3538

APR 1 3 2010

Approved as complying with the Florida Building Code
Date 05/12/2010
NOA# 10-0128.03
Miami Dade Product Control Division
By

AL-FAROOQ CORPORATION
ENGINEERS & PRODUCT DEVELOPMENT
1235 S.W. 87 AVE
MIAMI, FLORIDA 33174
TEL. (305) 264-8100 FAX. (305) 262-6978
COMP-ANL\W09-24SM

SERIES SMI-090 ALUM WINDOW WALL (L.M.I.)
SMI SYSTEMS BY PANDE PANE, LLC.
11305 N.W. 128 STREET
MEDLEY, FL. 33178
TEL. (305) 888-6288 FAX. (305) 888-6289

revisions:

no	date	by	description
A	04.06.10		NO CHANGE THIS SHEET

date: 04-16-09
scale: 1/2" = 1"
dr. by: HAMID
chk. by:

drawing no.
W09-24

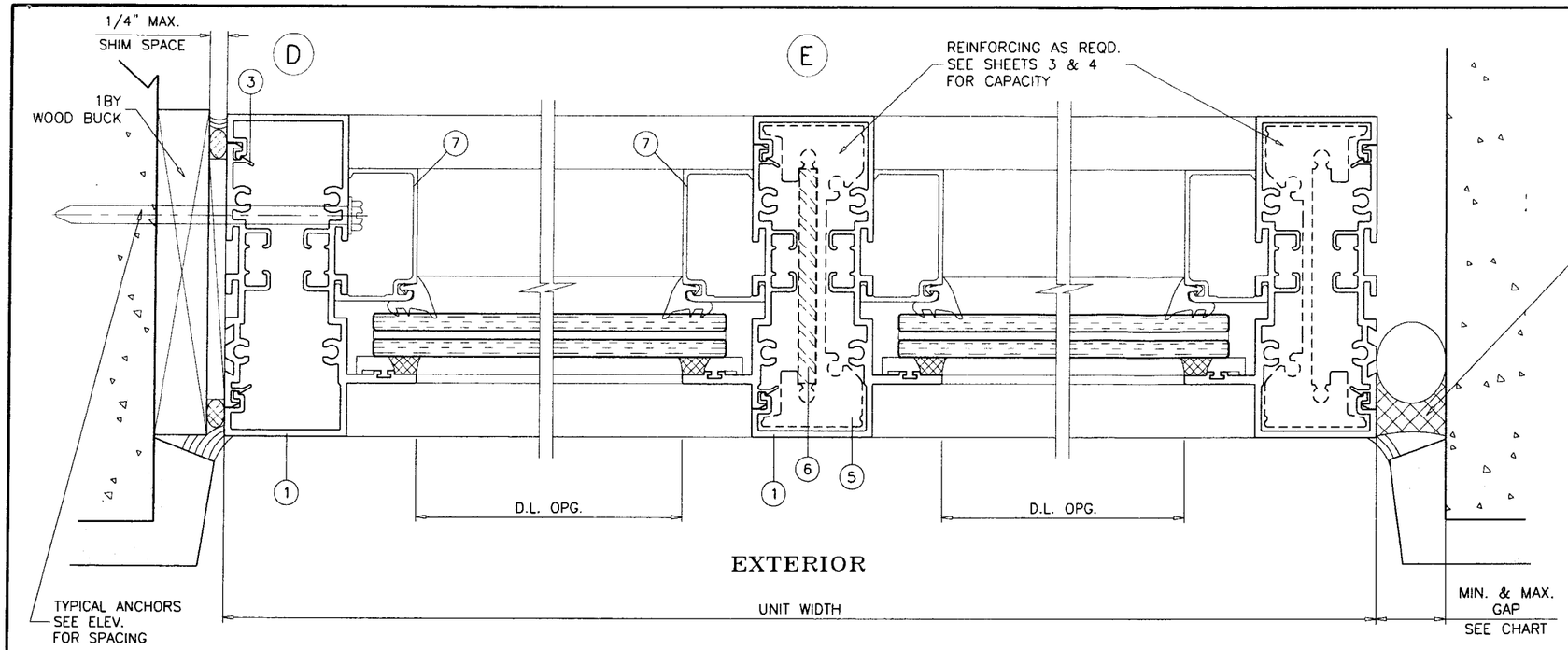

MAX. FRAME HEIGHT	GAP	
	MIN.	MAX.
72"	3/8"	1/2"
96"	1/2"	3/4"
120"	5/8"	1"

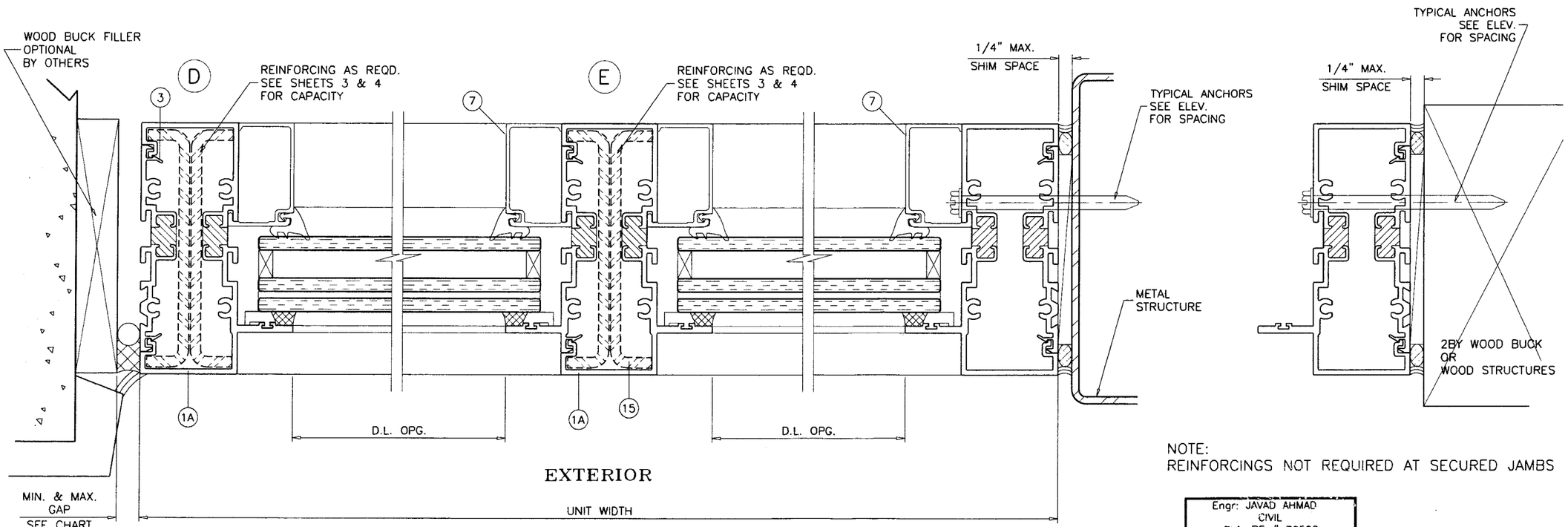

NOTE:
REINFORCINGS NOT REQUIRED AT SECURED JAMBS

INTERIOR OR EXTERIOR GLAZED

Engr: JAVAD AHMAD
CIVIL
FLA. PE # 70592
C.A.N. 3538

APR 1 3 2010

Approved as complying with the Florida Building Code
Date: 05/12/2010
NOA#: 10-0128.03
Miami-Dade Product Control Division
By:

AL-FAROOQ CORPORATION
ENGINEERS & PRODUCT DEVELOPMENT
1235 S.W. 87 AVE
MIAMI, FLORIDA 33174
TEL. (305) 264-8100 FAX. (305) 262-6978

COMP-ANL\W09-24SM

SERIES SMI-090 ALUM WINDOW WALL (L.M.I.)

SMI SYSTEMS BY PANDE PANE, LLC.
11305 N.W. 128 STREET
MEDLEY, FL. 33178
TEL. (305) 888-6288 FAX. (305) 888-6289

revisions:

no	date	by	description
A	04.06.10		NO CHANGE THIS SHEET

date: 04-16-09
scale: 1/2" = 1"
dr. by: HAMID
chk. by:

drawing no.
W09-24

SEE SEPARATE NOA FOR DESIGN LOAD CAPACITY OF DOORS AND DOOR ANCHORS.

LOWER VALUES FROM DOORS NOA OR STOREFRONT SYSTEM CAPACITY CHARTS WILL APPLY TO ENTIRE SYSTEM.

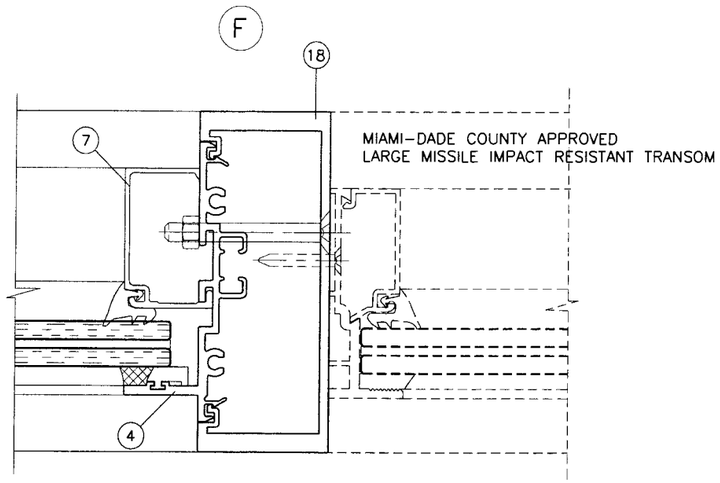

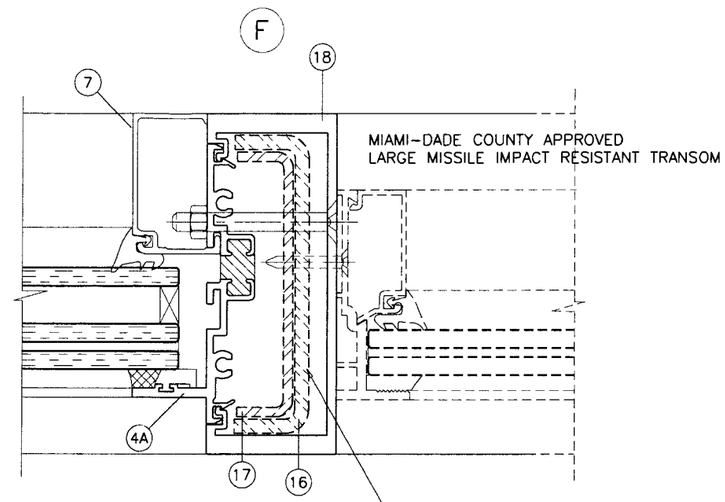

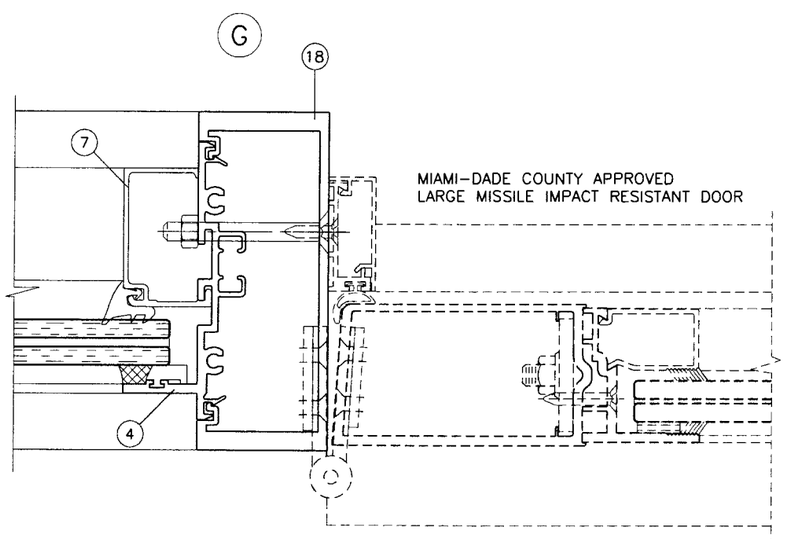

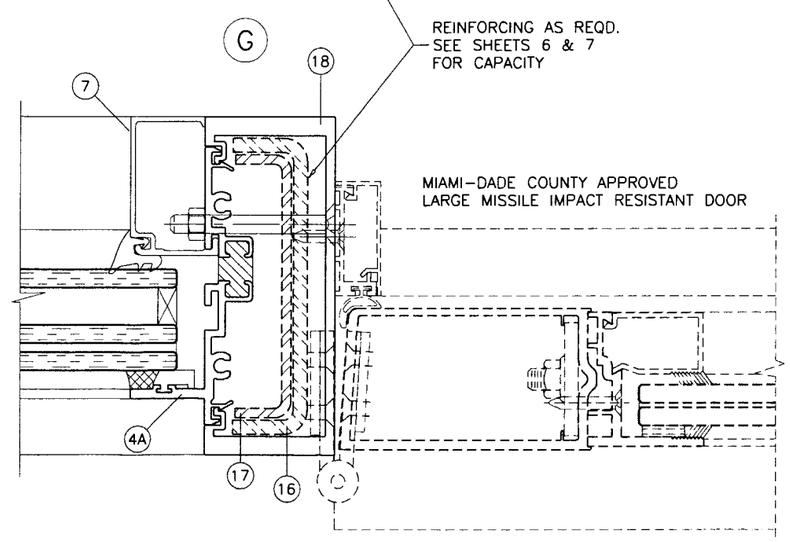

Engr: JAVAD AHMAD
CIVIL
FLA. PE # 70592
C.A.N. 3538

APR 13 2010

Approved as complying with the Florida Building Code
Date 05/12/2010
NOA# 10-0128.03
Miami-Dade Product Control Division
By

AL-FAROOQ CORPORATION
ENGINEERS & PRODUCT DEVELOPMENT
1235 S.W. 87 AVE
MIAMI, FLORIDA 33174
TEL. (305) 264-8100 FAX. (305) 262-6978

COMP-ANL\W09-24SM

SERIES SMI-090 ALUM WINDOW WALL (L.M.I.)

SMI SYSTEMS BY PANDE PANE, LLC.
11305 N.W. 128 STREET
MEDLEY, FL. 33178
TEL. (305) 888-6288 FAX. (305) 888-6289

revisions:

no	date	by	description
A	04.06.10		NO CHANGE THIS SHEET

date: 04-16-09
scale: 1/2" = 1"
dr. by: HAMID
chk. by:

drawing no.
W09-24

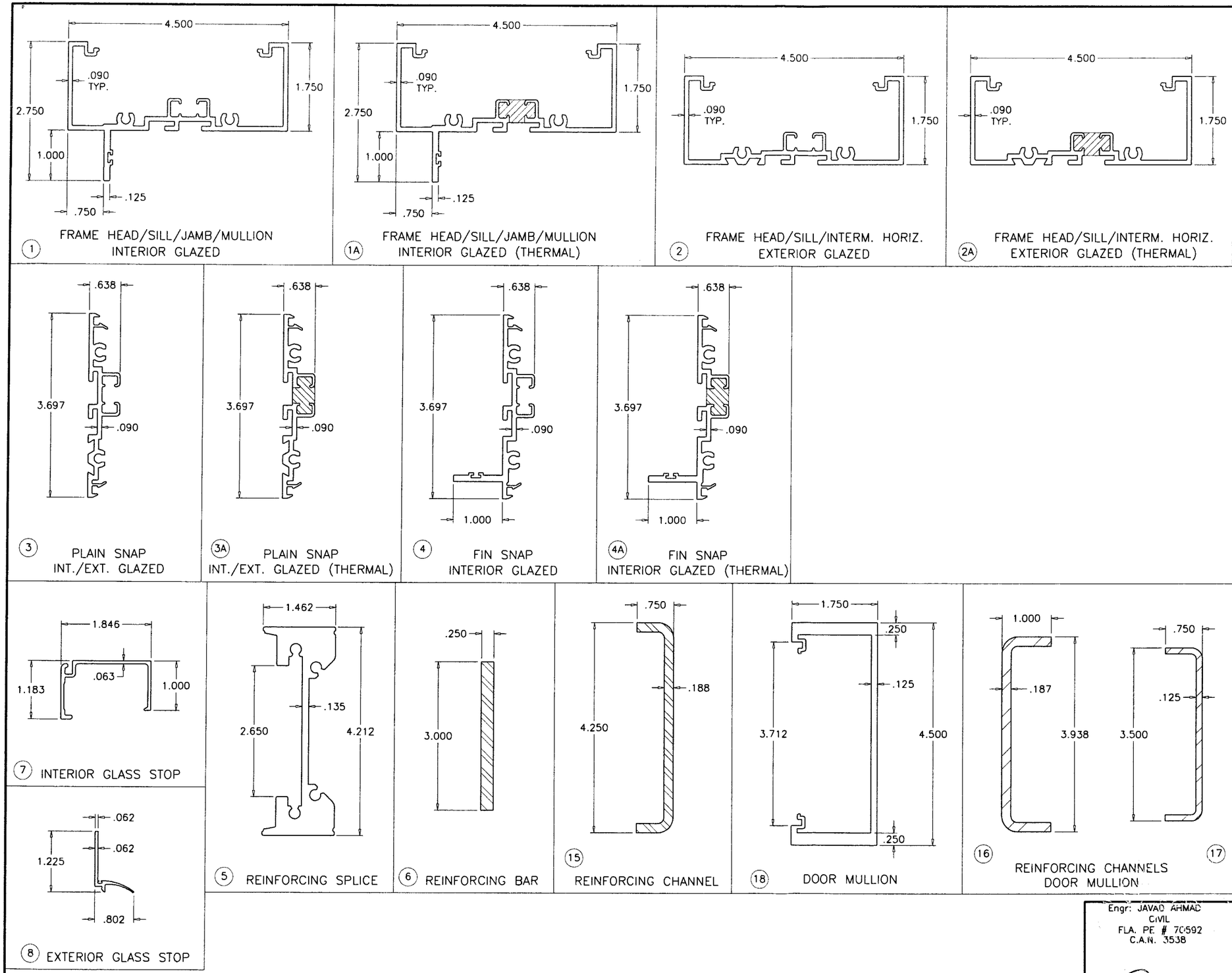

1 FRAME HEAD/SILL/JAMB/MULLION INTERIOR GLAZED

1A FRAME HEAD/SILL/JAMB/MULLION INTERIOR GLAZED (THERMAL)

2 FRAME HEAD/SILL/INTERM. HORIZ. EXTERIOR GLAZED

2A FRAME HEAD/SILL/INTERM. HORIZ. EXTERIOR GLAZED (THERMAL)

3 PLAIN SNAP INT./EXT. GLAZED

3A PLAIN SNAP INT./EXT. GLAZED (THERMAL)

4 FIN SNAP INTERIOR GLAZED

4A FIN SNAP INTERIOR GLAZED (THERMAL)

7 INTERIOR GLASS STOP

8 EXTERIOR GLASS STOP

5 REINFORCING SPLICE

6 REINFORCING BAR

15 REINFORCING CHANNEL

18 DOOR MULLION

16 17 REINFORCING CHANNELS DOOR MULLION

Engr: JAVAD AHMAD
CIVIL
FLA. PE # 70592
C.A.N. 3538

APR 13 2010

Approved as complying with the Florida Building Code
Date 05/12/2010
Exp# 10-0128.03
Miami Dade Product Control Division
By

AL-FAROOQ CORPORATION
ENGINEERS & PRODUCT DEVELOPMENT
1235 S.W. 87 AVE
MIAMI, FLORIDA 33174
TEL. (305) 264-8100 FAX. (305) 262-6978

COMP-ANL\W09-24SM

SERIES SMI-090 ALUM WINDOW WALL (L.M.I.)

SMI SYSTEMS BY PANDE PANE, LLC.
11305 N.W. 128 STREET
MEDLEY, FL. 33178
TEL. (305) 888-6288 FAX. (305) 888-6289

revisions:

no	date	by	description
A	04.06.10		NO CHANGE THIS SHEET

date: 04-16-09
scale: 1/2" = 1"
dr. by: HAMID
chk. by:

drawing no.
W09-24

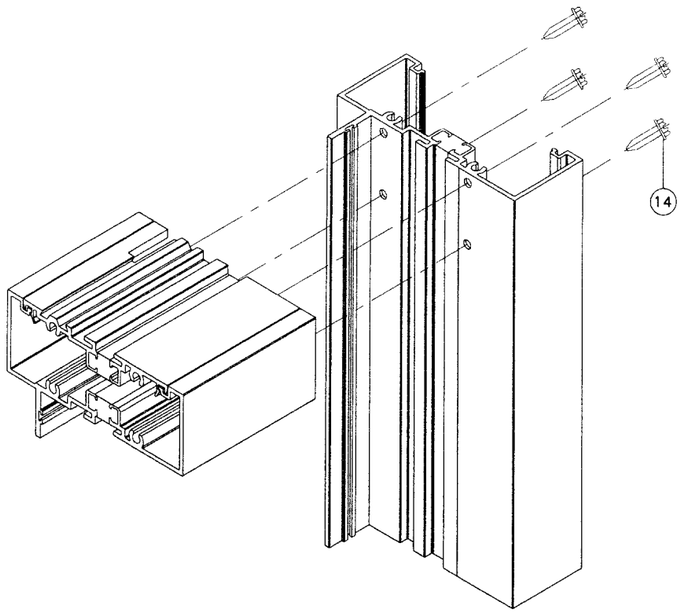

ITEM #	PART #	QUANTITY	DESCRIPTION	MATERIAL	MANF./SUPPLIER/REMARKS
1	SMI-091	AS REQD.	INT. GLAZED FRAME HEAD/SILL/JAMB/MULLION	6063-T6	SMITH MOUNTAIN
1A	SMI-091T	AS REQD.	INT. GLAZED FRAME HEAD/SILL/JAMB/MULLION (POUR & DEBRIDGE)	6063-T6	SMITH MOUNTAIN
2	SMI-098	AS REQD.	EXT. GLAZED FRAME HEAD/SILL/INTERM. HORIZ.	6063-T6	SMITH MOUNTAIN
2A	SMI-098T	AS REQD.	EXT. GLAZED FRAME HEAD/SILL/INTERM. HORIZ. (POUR & DEBRIDGE)	6063-T6	SMITH MOUNTAIN
3	SMI-094	AS REQD.	INT./EXT. GLAZED PLAIN SNAP	6063-T6	SMITH MOUNTAIN
3A	SMI-094T	AS REQD.	INT./EXT. GLAZED PLAIN SNAP (POUR & DEBRIDGE)	6063-T6	SMITH MOUNTAIN
4	SMI-093	AS REQD.	INT./EXT. GLAZED FIN SNAP	6063-T6	SMITH MOUNTAIN
4A	SMI-093T	AS REQD.	INT./EXT. GLAZED FIN SNAP (POUR & DEBRIDGE)	6063-T6	SMITH MOUNTAIN
5	SMI-095	AS REQD.	REINFORCING SPLICE	6005-T5	SMITH MOUNTAIN
6	–	AS REQD.	REINFORCING BAR	STEEL	36 KSI MIN.
7	SMI-092	AS REQD.	INTERIOR GLASS STOP	6063-T6	SMITH MOUNTAIN
8	SMI-097	AS REQD.	EXTERIOR GLASS STOP	6063-T6	SMITH MOUNTAIN
9	SMI-G01	AS REQD.	INTERIOR GASKET	EPDM	GLAZING RUBBER PRODUCTS (#116)
10	SMI-G02	AS REQD.	SINGLE FACE TAPE (3/8" X 1/2")	VINYL FOAM	FRANK LOWE
11	SMI-G07	AS REQD.	EXTERIOR GASKET	SANTOPRENE	CENTRAL PLASTICS INC.
12	SMI-SB06	2/ LITE	SETTING BLOCK LAM. GLASS (3/8" X 5/8" X 4" LG.)	RIGID PVC	CENTRAL PLASTICS INC.
12A	SMI-SB04	2/ LITE	SETTING BLOCK LAM. INSUL. GLASS (3/8" X 1-1/4" X 4" LG.)	RIGID PVC	CENTRAL PLASTICS INC.
13	SMI-P04	AS REQD.	THERMAL BRAKE SPACER FOR ALUM SPLICE	RIGID PVC	CENTRAL PLASTICS INC.
14	#12 X 1-1/2"	4/ CORNER	FRAME ASSEMBLY SCREWS	ST. STEEL	HEX. HEAD MACHINE SCREWS
15	–	AS REQD.	REINFORCING CHANNEL (36 KSI MIN.)	STEEL	–
16	–	–	REINFORCING CHANNEL (DOOR MULLION)	STEEL	1" X 3-15/16" X 1" X 3/16" THK.
17	–	–	REINFORCING CHANNEL (DOOR MULLION)	STEEL	3/4" X 3-1/2" X 3/4" X 1/8" THK.
18	SMI-005	AS REQD.	DOOR MULLION	6063-T6	SMITH MOUNTAIN

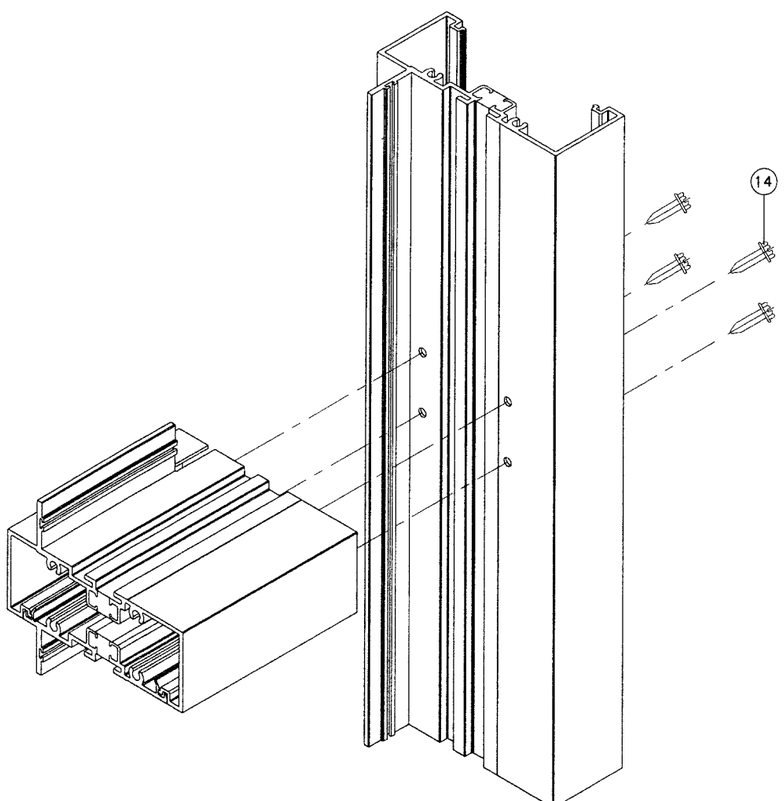

FRAME CORNERS

SEALANTS:

ALL FRAME CORNERS, JOINTS, MULLION SEAMS AND PERIMETER OF GLAZING BEAD TO FRAME SEALED WITH SILICONE SEALANT.

Engr: JAVAD AHMAD
CIVIL
FLA. PE # 70592
C.A.N. 3538

APR 1 3 2010

Approved as complying with the Florida Building Code
Date 05/12/2010
NOA# 10-0128.03
Miami-Dade Product Control Division
By

AL-FAROOQ CORPORATION
ENGINEERS & PRODUCT DEVELOPMENT
1235 S.W. 87 AVE
MIAMI, FLORIDA 33174
TEL. (305) 264-8100 FAX. (305) 262-6978

COMP-ANL\W09-24SM

SERIES SMI-090 ALUM WINDOW WALL (L.M.I.)

SMI SYSTEMS BY PANDE PANE, LLC.
11305 N.W. 128 STREET
MEDLEY, FL. 33178
TEL. (305) 888-6288 FAX. (305) 888-6289

revisions:

no	date	by	description
A	04.06.10		NO CHANGE THIS SHEET

date: 04-16-09
scale: 1/2" = 1"
dr. by: HAMID
chk. by:

drawing no.
W09-24

sheet 13 of 13