MIAMI-DADE COUNTY
BUILDING CODE COMPLIANCE OFFICE (BCCO)
PRODUCT CONTROL DIVISION

MIAMI-DADE COUNTY, FLORIDA
METRO-DADE FLAGLER BUILDING

140 WEST FLAGLER STREET, SUITE 1603
MIAMI, FLORIDA 33130-1563
(305) 375-2901 FAX (305) 375-2908
www.miamidade.gov

NOTICE OF ACCEPTANCE (NOA)

McGee Corporation
P.O. Box 1375
Matthews, NC 28106-1375

SCOPE:
This NOA is being issued under the applicable rules and regulations governing the use of construction materials. The documentation submitted has been reviewed by Miami-Dade County Product Control Division and accepted by the Board of Rules and Appeals (BORA) to be used in Miami Dade County and other areas where allowed by the Authority Having Jurisdiction (AHJ).

This NOA shall not be valid after the expiration date stated below. The Miami-Dade County Product Control Division (In Miami Dade County) and/or the AHJ (in areas other than Miami Dade County) reserve the right to have this product or material tested for quality assurance purposes. If this product or material fails to perform in the accepted manner, the manufacturer will incur the expense of such testing and the AHJ may immediately revoke, modify, or suspend the use of such product or material within their jurisdiction. BORA reserves the right to revoke this acceptance, if it is determined by Miami-Dade County Product Control Division that this product or material fails to meet the requirements of the applicable building code.

This product is approved as described herein, and has been designed to comply with the High Velocity Hurricane Zone of the Florida Building Code.

DESCRIPTION: 0.0396" (min.) Steel Deck (3" x 16") Panel for Canopy

APPROVAL DOCUMENT: Drawing No. PDCTS001, titled " Steel Deck Test Specimen ", sheets 1 through 4of 4, prepared by C. N. Sigmon, P.E., dated January 31, 1996, last revision dated October 18, 2010, signed and sealed by C. N. Sigmon, P.E., bearing the Miami-Dade County Product Control Renewal stamp with the Notice of Acceptance number and the expiration date by the Miami-Dade County Product Control Division.

MISSILE IMPACT RATING: None

LABELING: Each panel shall bear a permanent label with the manufacturer's name or logo, city, state and the following statement: "Miami-Dade County Product Control Approved", unless otherwise noted herein.

RENEWAL of this NOA shall be considered after a renewal application has been filed and there has been no change in the applicable building code negatively affecting the performance of this product.

TERMINATION of this NOA will occur after the expiration date or if there has been a revision or change in the materials, use, and/or manufacture of the product or process. Misuse of this NOA as an endorsement of any product, for sales, advertising or any other purposes shall automatically terminate this NOA. Failure to comply with any section of this NOA shall be cause for termination and removal of NOA.

ADVERTISEMENT: The NOA number preceded by the words Miami-Dade County, Florida, and followed by the expiration date may be displayed in advertising literature. If any portion of the NOA is displayed, then it shall be done in its entirety.

INSPECTION: A copy of this entire NOA shall be provided to the user by the manufacturer or its distributors and shall be available for inspection at the job site at the request of the Building Official.
This NOA **revises & renews NOA # 05-0128.01** and consists of this page 1, evidence submitted pages E-1 & E-2 as well as approval document mentioned above.
The submitted documentation was reviewed by **Helmy A. Makar, P.E., M.S.**

MIAMI-DADE COUNTY APPROVED

Helmy A. Makar
11/18/2010

NOA No. 10-0208.01
Expiration Date: 05/05/2011
Approval Date: 11/18/2010

McGee Corporation

NOTICE OF ACCEPTANCE: EVIDENCE SUBMITTED

1. EVIDENCE SUBMITTED UNDER PREVIOUS APPROVAL #95-1204.04

A. DRAWINGS

Title:	3" x 16" Steel Deck Test Specimen
Number:	PDCTS001
Signature:	Charles N. Sigmon, P.E.
Date:	10/31/95
Revision Date:	11/22/95 and 02/01/96

B. TESTS

Laboratory:	Construction Research Laboratory
Number:	6260
Type:	Uniform static air pressure wind load per PA 202-94 and live load.
.	
Signature:	Vipin Tolat, P.E.
Date:	11/07/95 through 11/17/95

Laboratory:	Hurricane Engineering and Testing Inc.
Number:	HETI 95-T105
Type:	Tensile Test ASTM E 8-93
Signature:	Hector M. Medina, P.E.
Date:	11/13/95

C. CALCULATIONS

Title:	3" x 16" Steel Deck Test
Signature:	Charles N. Sigmon, P.E.
Date:	10/25/95
Revision:	11/29/95 and 02/01/96

2. EVIDENCE SUBMITTED UNDER PREVIOUS APPROVAL #99-0323.07

A. DRAWINGS

1. None.

B. TESTS

1. None.

C. CALCULATIONS

1. None.

D. MATERIAL CERTIFICATIONS

1. None.

Helmy A. Makar, P.E., M.S.
Senior Product Control Examiner
NOA No. 10-0208.01
Expiration Date: 05/05/2011
Approval Date: 11/18/2010

NOTICE OF ACCEPTANCE: EVIDENCE SUBMITTED

3. EVIDENCE SUBMITTED UNDER PREVIOUS APPROVAL #05-0128.01

A. DRAWINGS

1. *Drawing No. PDCTS001, titled " Steel Deck Test Specimen ", sheets 1 through 4of 4, prepared by C. N. Sigmon, P.E., dated January 31, 1996, signed and sealed by C. N. Sigmon, P.E., on April 08, 2005,*

B. TESTS

1. *None.*

C. CALCULATIONS

1. *None.*

D. QUALITY ASSURANCE

1. *By Miami-Dade County Building Code Compliance Office.*

E. MATERIAL CERTIFICATION:

1. *None.*

4. NEW EVIDENCE SUBMITTED

A. DRAWINGS

1. *Drawing No. PDCTS001, titled " Steel Deck Test Specimen ", sheets 1 through 4of 4, prepared by C. N. Sigmon, P.E., dated January 31, 1996, last revision dated October 18, 2010, signed and sealed by C. N. Sigmon, P.E.*

B. TESTS

1. *None.*

C. CALCULATIONS

1. *None.*

D. QUALITY ASSURANCE

1. *By Miami-Dade County Building Code Compliance Office.*

E. MATERIAL CERTIFICATION:

1. *None.*

Helmy A. Makar, P.E., M.S.
Senior Product Control Examiner
NOA No. 10-0208.01
Expiration Date: 05/05/2011
Approval Date: 11/18/2010

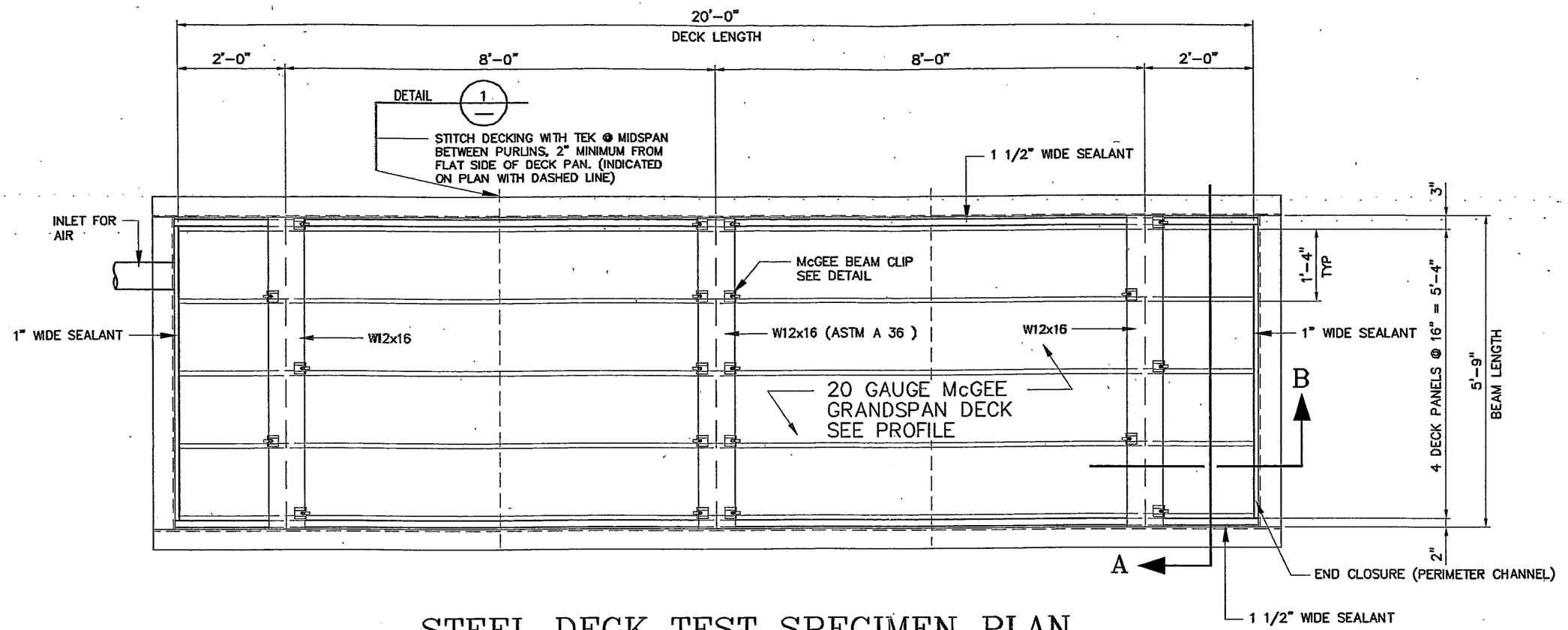

STEEL DECK TEST SPECIMEN PLAN

TEST SPECIFICATIONS

FLORIDA BUILDING CODE, 2007 ED.

ASCE 7-05

CALCULATED PRESSURE = ±64 PSF

TEST PRESSURE = ±128 PSF

LIVE LOAD TEST PRESSURE = +60 PSF

THE PANEL SPAN DESIGN OF EACH ACTUAL CANOPY PROJECT SHALL BE IN COMPLIANCE WITH ALL OF THE ALLOWABLES LISTED ON SHEET No. 4.

+ = DOWNWARD LOAD
− = UPWARD LOAD

PRODUCT REVISED
as complying with the Florida
Building Code
Acceptance No 10-0208.01
Expiration Date 05/05/2011
By Helena A. Mata
Miami Dade Product Control
Division

McGEE CORPORATION
12701 East Independence Blvd. P.O. Box 1375
Matthews, NC 28106-1375
Phone: (704) 882-1500
Watts: (800) 526-5589

ENGINEER: NAME/FLORIDA STATE REG. # C.N. SIGMON / No. 42167	FINAL JOB NO.	DRAWING NO. PDCTS001	
McGee Corporation Test Construction Research Laboratory Dade County, Florida			
SCALE:	REVISED 10/18/2010	DRAWN BY: KBH	
DATE: 01-31-96		CHK'D BY:	
Steel Deck Test Specimen Plan		SHEET NO. 1 OF. 4	

Charles N Sigmon

10-18-10

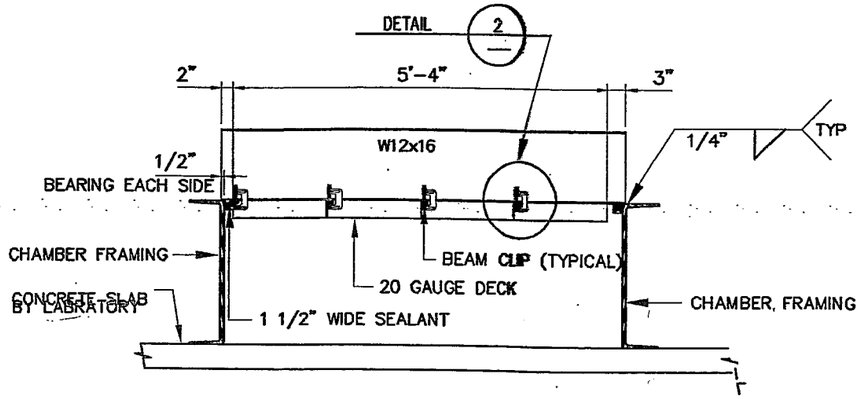

SECTION A

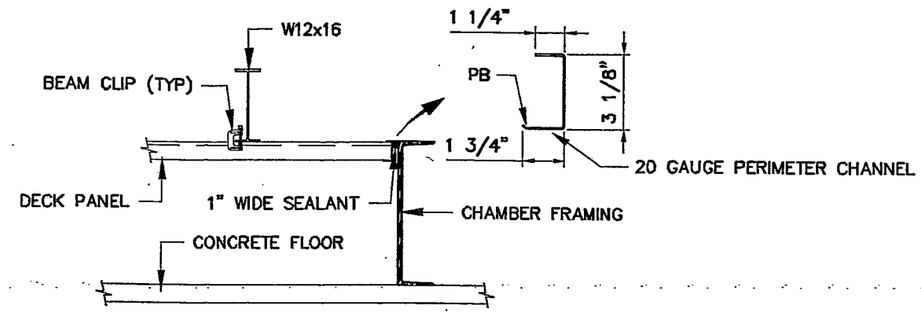

SECTION B

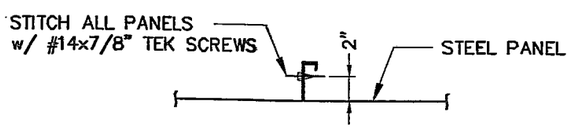

DETAIL 1

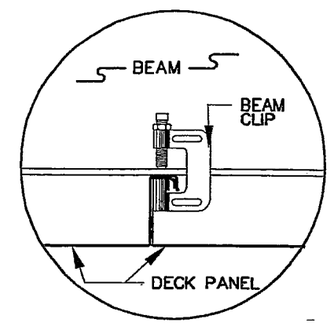

DETAIL 2

PRODUCT REVISED
as complying with the Florida
Building Code
Acceptance No 10-0208.01
Expiration Date 05/05/2011
By [signature]
Miami Dade Product Control
Division

McGEE CORPORATION 12701 East Independence Blvd. P.O. Box 1375 Matthews, NC 28106-1375 Phone: (704) 882-1500 Watts: (800) 526-5589	ENGINEER: NAME/FLORIDA STATE REG. # C.N. SIGMON / No. 42167	FINAL JOB NO.	DRAWING NO. PDCTS001
	McGee Corporation Test Construction Research Laboratory Dade County, Florida		
	SCALE: DATE: 01-31-96	REVISED 10/18/2010	DRAWN BY: KBH CHK'D BY:
	Steel Deck Test Specimen		
	Section & Details		SHEET NO. 2 OF. 4

[signature]

10-18-10

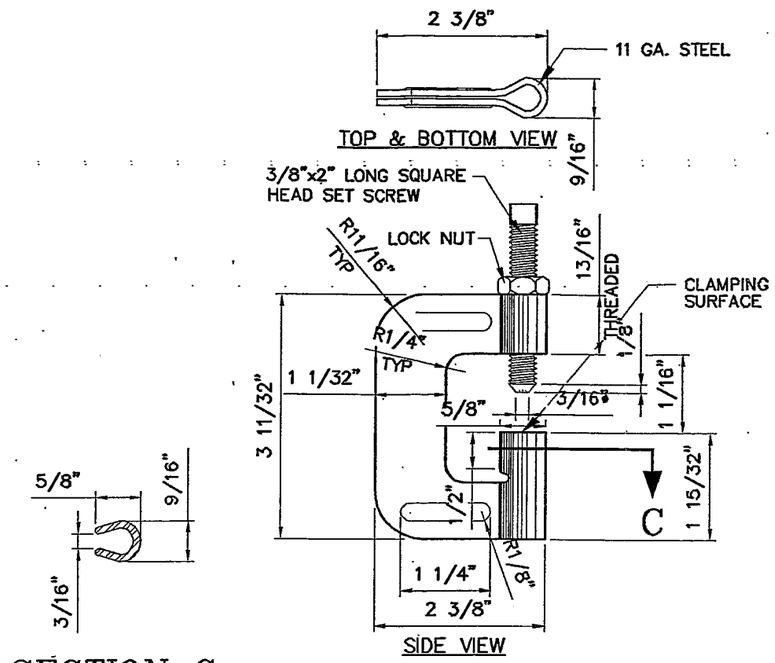

McGEE BEAM CLIP DETAIL

MATERIAL: 11 GAUGE PLATE, ASTM A526 CQ (GALVANIZED);
CASE HARDENED C1018–1022 LOW CARBON STEEL WIRE SET SCREW (ZINC PLATED)

McGEE BEAM CLIP INSTALLATION PROCEDURE: SET BEAM CLIP WITH SET SCREW ON TOP OF BEAM FLANGE AND CLAMPING SURFACE UNDER DECK RIB. PUSH CLIP AGAINST DECK AND BEAM FLANGE WITH SET SCREW AS FAR ONTO BEAM FLANGE AS POSSIBLE. WHILE KEEPING BEAM CLIP VERTICAL, TURN SET SCREW TO SNUG TIGHT WITHOUT BURROWING INTO STEEL BEAM FLANGE. THEN PROCEED TO TURN SET SCREW 3/4 TURN (270°). TIGHTEN LOCK NUT MAKING SURE THAT BEAM CLIP REMAINS IN POSITION.

PRODUCT REVISED
as complying with the Florida
Building Code
Acceptance No 10-0208.01
Expiration Date 05/05/2011
By Helena A. Nelson
Miami Dade Product Control
Division

McGEE CORPORATION
12701 East Independence
Blvd. P.O. Box 1375
Matthews, NC 28106–1375
Phone: (704) 882–1500
Watts: (800) 526–5589

ENGINEER: NAME/FLORIDA STATE REG. # C.N. SIGMON / No. 42167	FINAL JOB NO.	DRAWING NO. PDCTS001	Charles N. Sigmon
McGee Corporation Test Construction Research Laboratory Dade County, Florida			
SCALE:	REVISED 10/18/2010	DRAWN BY: KBH	
DATE: 01–31–96		CHK'D BY:	
Steel Deck Test Specimen			
Beam Clip Detail		SHEET NO. 3 OF. 4	10-18-10

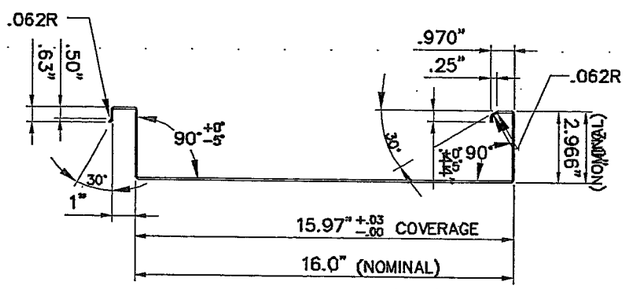

McGEE GRANDSPAN – DECK PROFILE

DECK MATERIAL: 20 GAUGE, GRADE D, HDG, G90, ASTM A446 (GALVANIZED & PAINTED)

THE MAX. DESIGN ALLOWABLES FOR THE 20 GA. STEEL DECK 3"x16" PANEL AND THE McGEE BEAM CLIP

MAX. ALLOWABLE BENDING MOMENT OF PANEL AT SUPPORTS = 596.0 ft. lbs

MAX. ALLOWABLE BENDING MOMENT OF PANEL BETWEEN SUPPORTS = 315.0 ft. lbs.

MAX. DEFLECTION OF PANEL = L/180

MAX. SUPPORT REACTION = 788.0 LBS. (FOR 2 McGEE BEAM CLIPS)(MAX. 394.0 lbs./clip)

A– THE ALLOWABLES ARE BASED ON A 16" WIDE PANEL LOADING. TO CALCULATE THE WIND PRESSURE PER SQUARE FOOT, MULTIPLY PANEL LOAD TIMES 12/16.

B– THIS 20 GA. STEEL PANEL SHALL BE USED IN THE CONSTRUCTION OF OPEN CANOPIES ONLY AND EACH ACTUAL CANOPY PROJECT SHALL BE CONSTRUCTED USING THE SAME PANEL CROSS SECTION AND SUPPORT DETAILS AS SHOWN IN THIS TEST. THE DESIGN OF THE PANEL SHALL BE IN COMPLIANCE WITH ALL OF THE MAXIMUM ALLOWABLES.

RECEIVED
2010 OCT 20 AM 8:32
ADMINISTRATIVE SERVICES DIVISION

PRODUCT REVISED
as complying with the Florida Building Code
Acceptance No 10-0208.01
Expiration Date 05/05/2011
By Miami Dade Product Control Division

McGEE CORPORATION
12701 East Independence Blvd. P.O. Box 1375
Matthews, NC 28106-1375
Phone: (704) 882-1500
Watts: (800) 526-5589

ENGINEER: NAME/FLORIDA STATE REG. # C.N. SIGMON / No. 42167	FINAL JOB NO.	DRAWING NO. PDCTS001
McGee Corporation Test Construction Research Laboratory Dade County, Florida		
SCALE:	REVISED 10/18/2010	DRAWN BY: KBH
DATE: 01-31-96		CHK'D BY:
Steel Deck Test Specimen		
Deck Profile & Notes		SHEET NO. 4 OF. 4

Charles N Sigmon
10-18-10