MIAMI-DADE COUNTY
BUILDING CODE COMPLIANCE OFFICE (BCCO)
PRODUCT CONTROL DIVISION

MIAMI-DADE COUNTY, FLORIDA
METRO-DADE FLAGLER BUILDING
140 WEST FLAGLER STREET, SUITE 1603
MIAMI, FLORIDA 33130-1563
(305) 375-2901 FAX (305) 375-2908
www.miamidade.gov/buildingcode

NOTICE OF ACCEPTANCE (NOA)

Ingersoll-Rand
6810 Hillsdale Court
Indianapolis, IN 46250

SCOPE:

This NOA is being issued under the applicable rules and regulations governing the use of construction materials. The documentation submitted has been reviewed by Miami-Dade County Product Control Division and accepted by the Board of Rules and Appeals (BORA) to be used in Miami Dade County and other areas where allowed by the Authority Having Jurisdiction (AHJ).

This NOA shall not be valid after the expiration date stated below. The Miami-Dade County Product Control Division (In Miami Dade County) and/or the AHJ (in areas other than Miami Dade County) reserve the right to have this product or material tested for quality assurance purposes. If this product or material fails to perform in the accepted manner, the manufacturer will incur the expense of such testing and the AHJ may immediately revoke, modify, or suspend the use of such product or material within their jurisdiction. BORA reserves the right to revoke this acceptance, if it is determined by Miami-Dade County Product Control Division that this product or material fails to meet the requirements of the applicable building code.

This product is approved as described herein, and has been designed to comply with the Florida Building Code, including the High Velocity Hurricane Zone.

DESCRIPTION: IR Series Single Flush Outswing Commercial Steel Doors w / wo Panic Exit Devices

APPROVAL DOCUMENT: Drawing No "**IRF-S07**", titled "Flush Outswing Doors", sheets 1 through 11 of 11, prepared by the manufacturer, dated 05-27-07 and last revised on 04/14/10, signed and sealed by Thomas Gordon, P.E., bearing the Miami-Dade County Product Control Renewal stamp with the Notice of Acceptance number and expiration date by the Miami-Dade County Product Control Division.

MISSILE IMPACT RATING: Large Missile Impact Resistant

Limitations:

1. See Design Pressures, Sizes, Hardware and Water infiltration limitation sheet 1& 2 of the drawings.
2. Expanded foam core options (F) in sheet 4 is limited to EPS by Falcon Corp and Polyisocyanurate –H200 (polyurethane) by Elliott Co.
3. Electrical/Electronic function is not part of this approval, such functions to be reviewed and approved by AHJ.

LABELING: Each unit shall bear a permanent label with the manufacturer's name or logo, city, state and Series and following statement: "Miami-Dade County Product Control Approved", unless otherwise noted herein.

RENEWAL of this NOA shall be considered after a renewal application has been filed and there has been no change in the applicable building code negatively affecting the performance of this product.

TERMINATION of this NOA will occur after the expiration date or if there has been a revision or change in the materials, use, and/or manufacture of the product or process. Misuse of this NOA as an endorsement of any product, for sales, advertising or any other purposes shall automatically terminate this NOA. Failure to comply with any section of this NOA shall be cause for termination and removal of NOA.

ADVERTISEMENT: The NOA number preceded by the words Miami-Dade County, Florida, and followed by the expiration date may be displayed in advertising literature. If any portion of the NOA is displayed, then it shall be done in its entirety.

INSPECTION: A copy of this entire NOA shall be provided to the user by the manufacturer or its distributors and shall be available for inspection at the job site at the request of the Building Official.

This NOA **revises & renews** NOA **# 07-0829.04** consists of this page 1 and evidence pages E1, E-2, as well as approval document mentioned above.

The submitted documentation was reviewed by **Ishaq I. Chanda, P.E.**

8
7/27/11

MIAMI-DADE COUNTY APPROVED

NOTICE OF ACCEPTANCE: EVIDENCE SUBMITTED

E. MATERIAL CERTIFICATIONS (transferred from file # **07-0829.04**)

1. Test Report No. **03NK2370/R145081**, January 21, 2003, issued by Underwriters laboratories Inc for "Surface Burning Characteristics of Building material" per ASTME84-00a and self Ignition per ASTM1929D for "Elfoam H200", issued to Elliott Co. of Indianapolis Inc.
2. Tensile test report # CTLA-776W (0194H), dtd 02/25/02 prepared by CTL Architectural Division, sheet samples, tested per ASTM E8, signed & sealed by Ramesh Patel, P.E.
3. Tensile Test report No. A103W1-Test 1, 2 & 3 dated 23 APR 03 per ASTME-8 for steel face sheet, prepared by Certified Testing laboratory, signed and sealed by Ramesh Patel, P.E.
4. Test Report No. **NER-384**, reissued dated May 01, 1994, issued by National Evaluation Service Inc to Huntsman Chemical Corporation for "Expanded Polystyrene EPS" for grade 86 & grade 54 for "Surface Burning Characteristics of Building material" per ASTME 84.
5. Test Report No. **9691**, dated August 28, 1987, 1994, issued by United Testing Company Inc. to Huntsman Chemical Corporation for "Expanded Polystyrene EPS" for grade 86 & 54 for "Self Ignition Temperature Test" per ASTMD-1929.
6. Test Report No. **R16529**, July 29, 2005, issued by Underwriters laboratories Inc for foamed plastic for "Surface Burning Characteristics of Building material" per ASTME84 and self Ignition per ASTM1929D for "BRYX-R16529", issued to Falcon Foam, Division of Atlas Roofing Corp.

F. STATEMENTS

1. Letter of conformance & "No financial interest" dated Feb 03, 2010, signed and sealed by Gordon Thomas, P.E.
2. Letter of conformance & "No financial interest" dated June 08, 2008, signed and sealed by Gordon Thomas, P.E. (transferred from file # **07-0829.04**)
3. Laboratory Statement of compliance, part of the above referenced test reports.
4. Addendum letter dated 3/15/10 for test report NCTL210-3645-1, issued by National certified Testing lab.
5. Letter of certification dated 04/20/10, issued by Ingersoll-Rand for electronic CO lock series mechanical /functional parts same as AD, ND and AD-M series.
6. Letter of commitment dated 04/21/10 issued by Ingersoll-Rand for additional tests for butt & continuous Hinges in near future, signed by Yuri Farber.

G. OTHER

1. This NOA **revises** & **renews** NOA **# 07-0829.04,** expiring May 05, 2015.
2. Previously consolidates NOA #(s) associated with this files are 07-0829.04, 02-0712.01, 02-0712.03, 03-0908.03, 04-0203.03, 04-0303.03 and 05-0103.01.
3. Consolidation Test proposal # **06-2468**, dated 04/27/07 approved by BCCO.
4. IR Locks & Panic devices brochures / catalogs supplied by manufacturer.

Ishaq I. Chanda

Ishaq I Chanda, P.E.
Product Control Examiner
NOA No 10-0209.07
Expiration Date: May 05, 2015
Approval Date: May 12, 2010

NOTICE OF ACCEPTANCE: EVIDENCE SUBMITTED

A. DRAWINGS (transferred from file # **07-0829.04**)

1. Manufacturer's parts and sections drawings.
2. Drawing No "**IRF-S07**", titled "Flush Outswing Doors", sheets 1 through 11 of 11, prepared by the manufacturer, dated 05-27-07 and last revised on 04/14/10, signed and sealed by Thomas Gordon, P.E.

B. TESTS

1. Test report on
   1) Uniform Static Air Pressure Test, Loading per TAS 202-94
   2) Large Missile Impact Test per FBC, TAS 201-94
   3) Cyclic Wind Pressure Loading per FBC, TAS 203-94
   4) Forced Entry Test, per PA 202-94

   Along with manufacturer's parts and section drawings of double flush outswing steel doors, marked by National Certified Testing Lab, Test Reports No. **NCTL-210- 3580-2,** dated March 25, 2009, signed and sealed by Gerry Ferrara, P. E.
2. Test report on (transferred from file # **07-0829.04**)
   1) Air Infiltration Test, per TAS 202-94
   2) Uniform Static Air Pressure Test, Loading per TAS 202-94
   3) Large Missile Impact Test per FBC, TAS 201-94
   4) Cyclic Wind Pressure Loading per FBC, TAS 203-94
   5) Forced Entry Test, per PA 202-94

   Along with manufacturer's parts and section drawings of single Flush outswing steel doors, marked by Certified Testing Lab, Test Reports No(s). **CTLA-776W** dated February 20, 2002, **CTLA-776W1** dated April 25, 2002, **CTLA-776W-2, 3** dated April 20, 2002, **CTLA-1035W-2** dated Feb. 11, 2003, **CTLA-1086-W** dated Nov. 17, 2003, **CTLA –1107W-3** dated Aug. 05, 2003, all signed and sealed by Ramesh Patel, P.E.
3. Additional test reports
   1) Uniform Static Air Pressure Test, Loading per FBC TAS 202-94.
   2) Water Resistance Test per FBC TAS 202-94

   Along with marked-up drawings and installation diagram of double steel commercial doors, prepared by National Certified Testing Laboratories Inc., Test Report No. **NCTL-210-03-0514-11,** dated August 31, 2004 , **NCTL 210- 03-3511-1** dated 04/09/08 and **NCTL 210- 03-3549-1** dated 08/26/08, all signed and sealed by Gerry Ferrara, P. E.
4. Reference test report No.CTLA-1107W for strap anchor qualification.

C. CALCULATIONS: (transferred from file # **07-0829.04**)

1. Statement of compliance & anchor verification evaluation report, dated 04-23-2007 and last revised on 07/14/2008, prepared, signed & sealed by Thomas Gordon., P.E.
2. Evaluation report for Hinges dated 09/01/04, prepared, signed & sealed by Thomas Gordon., P.E.

D. QUALITY ASSURANCE BY:

1. Miami-Dade County Building Code Compliance Office (BCCO).

Ishaq I. Chanda

Ishaq I Chanda, P.E.
Product Control Examiner
NOA No 10-0209.07
Expiration Date: May 05, 2015
Approval Date: May 12, 2010

MORTISE LOCKSET WITH DEADBOLT FUNCTION

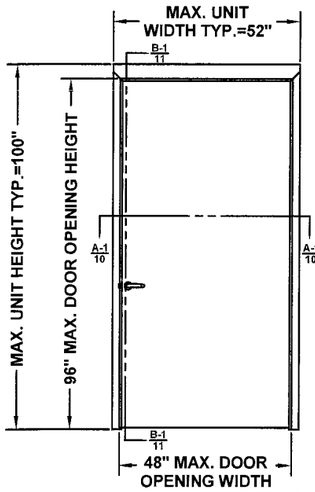

	DESIGN PRESSURE RATING, PSF	
	WHERE WATER INFILTRATION REQUIREMENT IS NEEDED	WHERE WATER INFILTRATION REQUIREMENT IS NOT NEEDED
1	±75 SEE TABLE 3 ON SHT. 5	±75 SEE TABLE 4 ON SHT. 5

CYLINDRICAL LOCKSET 1/2" THROW LATCH

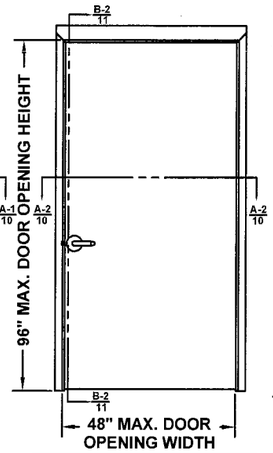

	DESIGN PRESSURE RATING, PSF	
	WHERE WATER INFILTRATION REQUIREMENT IS NEEDED	WHERE WATER INFILTRATION REQUIREMENT IS NOT NEEDED
2	±55 SEE TABLE 3 ON SHT. 5	±55 SEE TABLE 4 ON SHT. 5

CYLINDRICAL LOCKSET 1/2" THROW LATCH

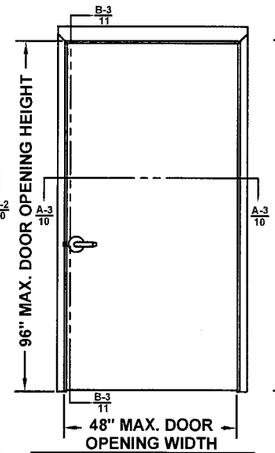

	DESIGN PRESSURE RATING, PSF	
	WHERE WATER INFILTRATION REQUIREMENT IS NEEDED	WHERE WATER INFILTRATION REQUIREMENT IS NOT NEEDED
3	±65 SEE TABLE 3 ON SHT. 5	±65 SEE TABLE 4 ON SHT. 5

CYLINDRICAL LOCKSET 3/4" THROW LATCH

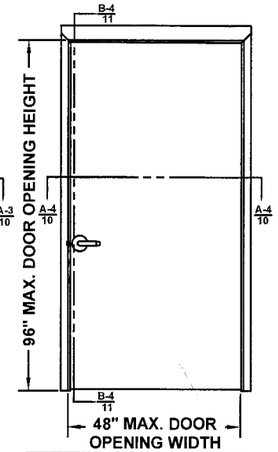

	DESIGN PRESSURE RATING, PSF	
	WHERE WATER INFILTRATION REQUIREMENT IS NEEDED	WHERE WATER INFILTRATION REQUIREMENT IS NOT NEEDED
4	±75 SEE TABLE 3 ON SHT. 5	±75 SEE TABLE 4 ON SHT. 5

SURFACE VERTICAL ROD EXIT DEVICE

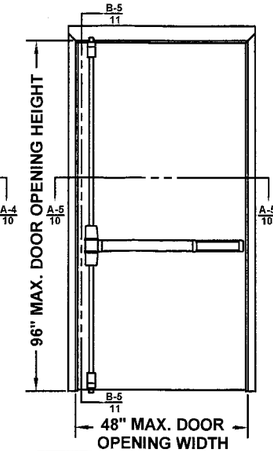

	DESIGN PRESSURE RATING, PSF	
	WHERE WATER INFILTRATION REQUIREMENT IS NEEDED	WHERE WATER INFILTRATION REQUIREMENT IS NOT NEEDED
5	±70 SEE TABLE 3 ON SHT. 5	±70 SEE TABLE 4 ON SHT. 5

CONCEALED VERTICAL ROD EXIT DEVICE

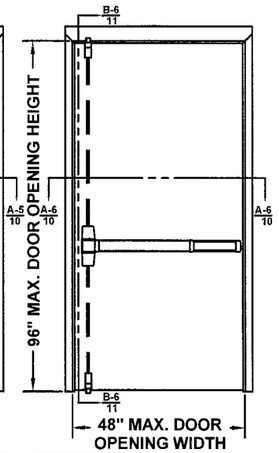

	DESIGN PRESSURE RATING, PSF	
	WHERE WATER INFILTRATION REQUIREMENT IS NEEDED	WHERE WATER INFILTRATION REQUIREMENT IS NOT NEEDED
6	±70 SEE TABLE 3 ON SHT. 5	±70 SEE TABLE 4 ON SHT. 5

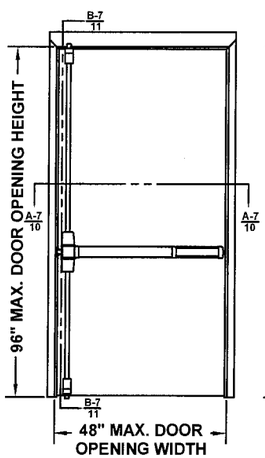

	DESIGN PRESSURE RATING, PSF	
	WHERE WATER INFILTRATION REQUIREMENT IS NEEDED	WHERE WATER INFILTRATION REQUIREMENT IS NOT NEEDED
7	±70 SEE TABLE 3 ON SHT. 5	±70 SEE TABLE 4 ON SHT. 5

THREE-POINT LATCHING EXIT DEVICE

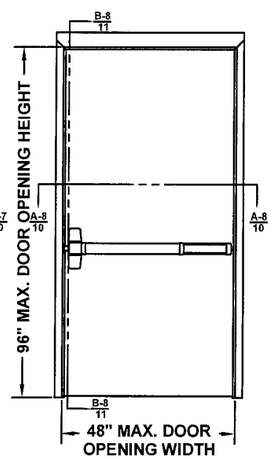

	DESIGN PRESSURE RATING, PSF	
	WHERE WATER INFILTRATION REQUIREMENT IS NEEDED	WHERE WATER INFILTRATION REQUIREMENT IS NOT NEEDED
8	±70 SEE TABLE 3 ON SHT. 5	±70 SEE TABLE 4 ON SHT. 5

RIM EXIT DEVICE

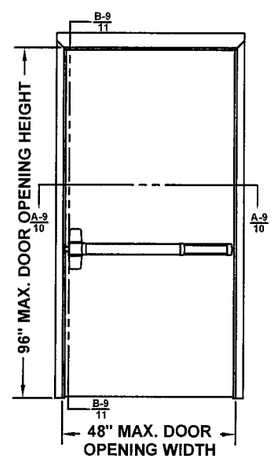

	DESIGN PRESSURE RATING, PSF	
	WHERE WATER INFILTRATION REQUIREMENT IS NEEDED	WHERE WATER INFILTRATION REQUIREMENT IS NOT NEEDED
9	±75 SEE TABLE 3 ON SHT. 5	±100 SEE TABLE 4 ON SHT. 5

RIM EXIT DEVICE

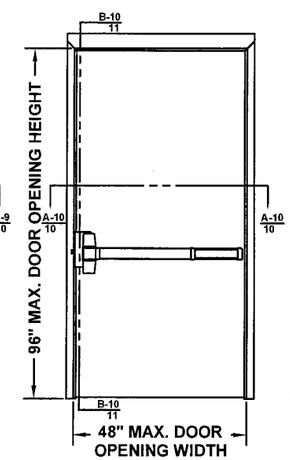

	DESIGN PRESSURE RATING, PSF	
	WHERE WATER INFILTRATION REQUIREMENT IS NEEDED	WHERE WATER INFILTRATION REQUIREMENT IS NOT NEEDED
10	±70 SEE TABLE 3 ON SHT. 5	±70 SEE TABLE 4 ON SHT. 5

MORTISE EXIT DEVICE

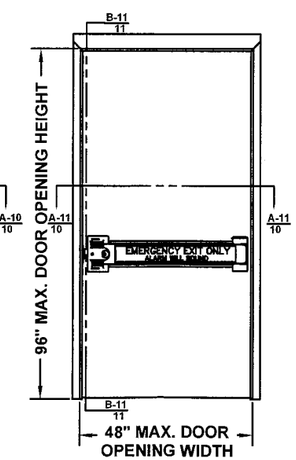

	DESIGN PRESSURE RATING, PSF	
	WHERE WATER INFILTRATION REQUIREMENT IS NEEDED	WHERE WATER INFILTRATION REQUIREMENT IS NOT NEEDED
11	±55 SEE TABLE 3 ON SHT. 5	±55 SEE TABLE 4 ON SHT. 5

EXIT ALARM LOCK

REVISIONS

LTR	DESCRIPTION		DATE	APPROVED
A	APPROVAL DWG	YMF	05/20/07	
B	REVISED DWG	RAP	10/11/07	
C	REVISED DWG	RAP	12/10/07	
D	REVISED DWG	YMF	01/04/08	
E	REVISED DWG	YMF	03/31/08	
F	REVISED DWG	YMF	06/02/08	
G	REVISED DWG	YMF	01/20/10	
H	REVISED DWG	YMF	04/07/10	

CYLINDRICAL DEADLOCK

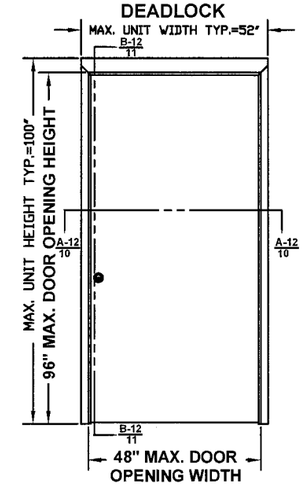

	DESIGN PRESSURE RATING, PSF	
	WHERE WATER INFILTRATION REQUIREMENT IS NEEDED	WHERE WATER INFILTRATION REQUIREMENT IS NOT NEEDED
12	±60 SEE TABLE 3 ON SHT. 5	±60 SEE TABLE 4 ON SHT. 5

RIM EXIT DEVICE

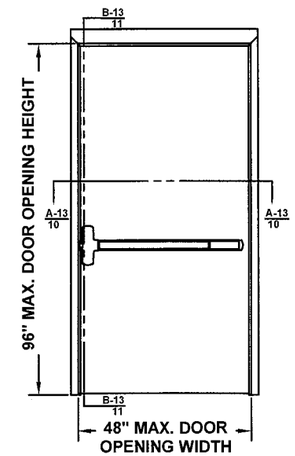

	DESIGN PRESSURE RATING, PSF	
	WHERE WATER INFILTRATION REQUIREMENT IS NEEDED	WHERE WATER INFILTRATION REQUIREMENT IS NOT NEEDED
13	+70/-55 SEE TABLE 3 ON SHT. 5	+70/-55 SEE TABLE 4 ON SHT. 5

PRODUCT RENEWED
as complying with the Florida Buiding Code
Acceptance No 10-0209.07
Expiration Date MAY 5, 2015
By Ishaq I. Chanda
Miami Dade Product Control Division

4/14/10
Gordon Thomas, P.E.
3759 Blossom Court
Mason, OH 45040
Florida # 46718
Date

NOTES:
1. INTERIOR VIEWS ARE SHOWN FOR ALL ELEVATIONS
2. SEE TABLE 1 ON SHEET 2 FOR HARDWARE APPLICATIONS AND LIMITATIONS
3. SEE SHEET 3 FOR HINGE REQUIREMENTS
4. SEE SHEET 4 FOR ANCHORING TYPES AND LIMITATIONS
5. SEE SHEET 5 FOR WEATHERSTRIPPING INSTALLATION DETAILS AND LIMITATIONS

BEND RADIUS

THIRD ANGLE PROJECTION

DRAWN YMF	DATE 05/20/07
CHECKED	
APPROVED	
ENG. APPVL JPD	10/11/07

Ingersoll Rand
Security Technologies

TITLE MIAMI-DADE PRODUCT APPROVAL
FLUSH OUTSWING DOORS AND HARDWARE CONFIGURATIONS
IR COMMERCIAL DOOR OPENING SINGLE FLUSH DOORS.

SIZE	FLAT	DWG NO.	REV
		IRFS07	H
SCALE: NTS	AUTOCAD		SHEET 1 of 11

Door Configuration	Maximum Design Pressure, PSF		Maximum Door Opening Size, in.		Locking Hardware Description				Comments
	Positive	Negative	Width	Height	Hardware Family	Model/Series	Strike Models	IR Brand	
1	75	75	48	96	Mortise Lock	L/LV9400/AD MS	10-072	Schlage	Functions with deadbolt, 3/4" min. throw latch & 1" min. throw deadbolt
	75	75	48	96	Mortise Lock	M	ANSI	Falcon	
	75	75	48	96	Mortise Lock	5500	ANSI	Locknetics / Schlage	functions with autobolt, 3/4" min. throw
2	55	55	48	96	Cylindrical Lock	AL	10-025	Schlage	1/2" throw latch
3	65	65	48	96	Cylindrical Lock	D/ND/AD CYL	10-025	Schlage	1/2" throw latch
4	75	75	48	96	Cylindrical Lock	D/ND/AD CYL	10-025	Schlage	3/4" throw latch
	75	75	48	96	Cylindrical Lock	T	ANSI	Falcon	3/4" throw latch
	75	75	48	96	Cylindrical Lock	5100	ANSI	Locknetics / Schlage	3/4" throw latch
5	70	70	48	96	Surface Vertical Rod Exit Device	98/9927(F)	299F/499F Top, 304L/248L4 Bottom	Von Duprin	
	70	70	48	96	Surface Vertical Rod Exit Device	(F)18-V	3788 Top, 2130 Bottom	Monarch	
	70	70	48	96	Surface Vertical Rod Exit Device	(F)25-V	3788 Top, 2130 Bottom	Falcon	
6	70	70	48	96	Concealed Vertical Rod Exit Device	98/9947-F	338 Top, 385A Bottom	Von Duprin	
	70	70	48	96	Concealed Vertical Rod Exit Device	F-18-C	4188 Top, 2130 Bottom	Monarch	
	70	70	48	96	Concealed Vertical Rod Exit Device	F-25-C	4188 Top, 2130 Bottom	Falcon	
7	70	70	48	96	Three-Point Latching Device	98/9957(F)	299F/499F Top/Middle, 304L/248L4 Bottom	Von Duprin	
8	70	70	48	96	Rim Exit Device	98/99(F)	299F/499F	Von Duprin	
	70	70	48	96	Rim Exit Device	88-F	268	Von Duprin	
	70	70	48	96	Rim Exit Device	(F)DL-18-R	F570	Monarch	
9	75/100 SEE NOTE 2.	75/100 SEE NOTE 2.	48	96	Rim Exit Device	XP98/99(F)	909/954	Von Duprin	
10	70	70	48	96	Mortise Exit Device	98/9975(F)	575	Von Duprin	
	70	70	48	96	Mortise Exit Device	8875(F)	575	Von Duprin	
	70	70	48	96	Mortise Exit Device	(F)18-M	1279	Monarch	
	70	70	48	96	Mortise Exit Device	(F)25-M	1279	Falcon	
11	55	55	48	96	Exit Alarm Lock	2670 GUARD-X	267	Von Duprin	
12	60	60	48	96	Cyl. Deadlock	B600/700/800	10-055	Schlage	
	60	60	48	96	Cyl. Deadlock	D400/800	010018-000/001	Falcon	
13	70	55	48	96	Rim Exit Device	(F)25-R	299F/499F	Falcon	

TABLE 1.

NOTES:

1: SEE SHEETS 7, 8 & 9 FOR LOCKING HARDWARE.

2. . DOOR CONFIGURATION 9 IS RATED FOR MAXIMUM DESIGN PRESSURE ±100 PSF WHEN WATER INFILTRATION REQUIREMENT IS NOT NEEDED, AND UP TO +75 PSF WHEN WATER INFILTRATION REQUIREMENT IS NEEDED (SEE TABLE 3 ON SHT.5)

3. SCHLAGE AL-SERIES CYLINDRICAL LOCK, door configuration 2, IS LIMITED TO ±55 PSF MAXIMUM DESIGN PRESSURE

REVISIONS

LTR	DESCRIPTION			DATE	APPROVED
A	APPROVAL	DWG	YMF	05/20/07	
B	REVISED	DWG	RAP	10/11/07	
C	REVISED	DWG	RAP	12/10/07	
D	REVISED	DWG	YMF	01/04/08	
E	REVISED	DWG	YMF	03/31/08	
F	REVISED	DWG	YMF	06/02/08	
G	REVISED	DWG	YMF	03/03/09	
H	REVISED	DWG	YMF	04/07/10	

PRODUCT RENEWED
as complying with the Florida
Buiding Code
Acceptance No 10-020907
Expiration Date MAY 5, 2015
By Ishaq I. Chanda
Miami Dade Product Control
Division

4/14/10
Gordon Thomas, P.E. Date
3759 Blossom Court
Mason, OH 45040
Florida # 46718

BEND RADIUS

THIRD ANGLE PROJECTION

DRAWN	YMF	DATE 05/20/07
CHECKED		
APPROVED		
ENG. APPVL	JPD	10/11/07

Ingersoll Rand
Security Technologies

TITLE MIAMI–DADE PRODUCT APPROVAL

FLUSH OUTSWING DOORS AND HARDWARE CONFIGURATIONS
IR COMMERCIAL DOOR OPENING SINGLE FLUSH DOORS.

SIZE	FLAT	DWG NO.	REV
		IRFS07	H

SCALE: NTS | AUTOCAD | SHEET 2 of 11

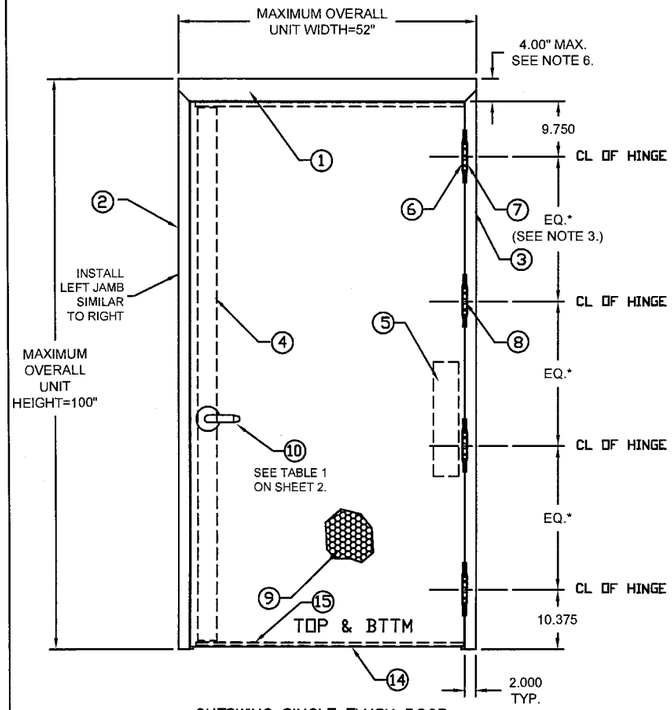

OUTSWING SINGLE FLUSH DOOR
(EXTERIOR VIEW)
ALL DIMENSIONS TYPICAL, UNLESS SPECIFIED OTHERWISE

DOOR VIEW

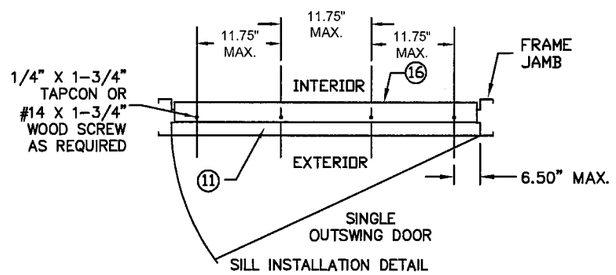

SILL INSTALLATION DETAIL

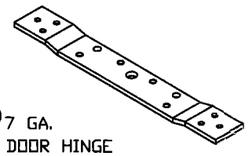

⑥ 7 GA. DOOR HINGE REINFORCEMENT

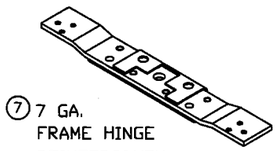

⑦ 7 GA. FRAME HINGE REINFORCEMENT

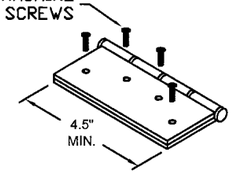

⑧ BUTT HINGE
MIN SIZE 4.5" X 4.5" STD. WT. (.134" MIN.)
IVES 5BB1/3CB1
HAGER 1279
STANLEY F179/1900

⑧ CONTINUOUS HINGE
IVES 112HD, 224HD, 600 & 700 SERIES
STANLEY 661HD
SELECT SL11HD
HAGER 790-900 & 780-224HD
MARKAR FM-300 & HG305
ABH A500 & A240HD

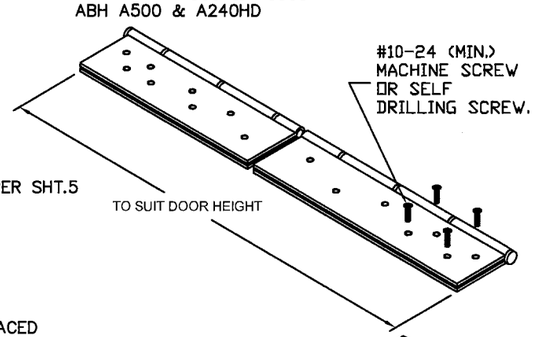

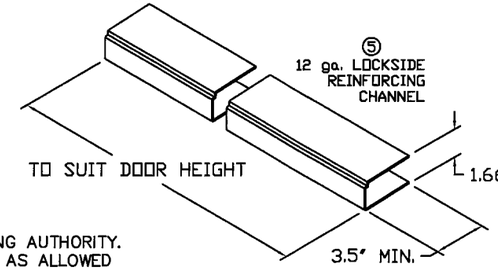

Gordon Thomas, P.E.
3759 Blossom Court
Mason, OH 45040
Florida # 46718

4/14/10
Date

PRODUCT RENEWED
as complying with the Florida Building Code
Acceptance No 10-0209.07
Expiration Date MAY 5, 2015
By Shaq L. Chand
Miami Dade Product Control Division

REVISIONS

LTR	DESCRIPTION		DATE	APPROVED
A	APPROVAL DWGS.	YMF	05/20/07	
B	REVISED DWGS.	RAP	10/11/07	
C	REVISED DWGS.	RAP	12/10/07	
D	REVISED DWGS.	YMF	01/04/08	
E	REVISED DWGS.	YMF	03/24/08	
F	REVISED DWGS.	YMF	06/02/08	
G	REVISED DWGS.	YMF	03/03/09	
H	REVISED DWGS.	YMF	04/07/10	

TABLE 2.

	QUANTITY	DESCRIPTION		MATERIAL	SIZE
1	1	HEAD SEE SHT 6 ASTM A366		.053" MIN. STL	MAX. 48"
2	1	STRIKE JAMB SEE SHT. 6 ASTM A366		.053" MIN. STL	MAX. 100"
3	1	HINGE JAMB SEE SHT 6 ASTM A366		.053" MIN. STL	MAX. 100"
4	1	LOCK SIDE REINFORCEMENT CHANNEL		.093" MIN. STL	3.5 X 93.44 MAX
5	1	HINGE SIDE PANIC REINFORCEMENT		.067" MIN. STL	MAX. 20"
6	NOTE 3.	HINGE REINFORCEMENT DOOR ASTM A621		.167" MIN. STL.	1.28" X 9.19"
7	NOTE 3.	HINGE REINFORCEMENT FRAME ASTM A621		.167" MIN. STL.	1.3" X 9.187" MAX.
8	NOTE 3.	4.5" X 4.5" BUTT HINGES		.134 MIN.	(8) #12-24 MS PER HINGE
		OPTIONAL CONTINUOUS HINGE		.067" MIN. STL/.12 ALUM	MAX. 95"
9	1	CORE MATERIAL (SHT. 4): A) HONEYCOMB B) STEEL STIFFENED C/F) POLYSTYRENE D/F) POLYURETHANE/POLYISOCYANURATE E) MINERAL BOARD TEMPERATURE RISE CORE			
10	1	LOCKING HARDWARE - SEE SHEET 2, TABLE 1			
11	1	THRESHOLD SILL W/BUMPER GASKET 1) ZERO INT'L 566 2) NATIONAL GAURD 950 SEE SHT. 5		.100" ALUM. 6063 T5	5.50"X0.5"X48"MAX.
12	NOTE 2.	JAMB ANCHOR ASTM A924		SEE SHEET 4	
13	3	PS074 WEATHER STRIPPING		TPE	MAX. 24'
14	1	FAS-SEAL DOOR SWEEP		TPE	MAX. 47.66"
15	1	END CHANNEL ASTM A924 (14 GA - INVERTED)			.69" X 1.66" X 47.66" MAX.
16	AS NEEDED	BUTYL RUBBER OR 100% SILICONE			
17	1	DOOR SLAB (16 OR 14 GA)		SEE SHEET 6	4' X 8' MAX.
18	1	BY ZERO INT'L	DOOR SEAL No.8144FS	TPE	MAX. 24'
		BY STEELCRAFT	DOOR SEAL PS074		
19	2	BY ZERO INT'L	DOOR SWEEP No.539	TPE	MAX. 96"
		BY NGP	DOOR SWEEP No.202N		
20	1	BY ZERO INT'L	DOOR SWEEP No.139	SEE SHEET 5	MAX. 48"
		BY NGP	OMIT		
21	1	BY ZERO INT'L	ADJUSTABLE STOP No.475	TPE	MAX. 48"
		BY NGP	ADJUSTABLE STOP No.170N		
22	1	BY ZERO INT'L	RAIN DRIP No.11	SEE SHEET 5	MAX. 48"
		BY NGP	DRIP CAP No.16A		
23	1	TOP CAP GALV. A60 ASTM A924		.020" MIN. STL	0.5" X 1.76" X 48" MAX.

(SEE NOTE 12)

NOTES:

1. ONE ROW OF PS074 WEATHERSTRIPPING PER JAMB AND HEAD. INSTALL PER SHT.5
2. ANCHOR REQUIREMENTS:
   SEE SHEET 4 FOR APPROVED ANCHORS AND INSTALLATION.
3. HINGE REQUIREMENTS: 4.5" STD WT. MIN.
   FOR DOOR OPENING UP TO 90" HIGH – MIN (3) HINGES
   FOR DOOR OPENING OVER 90" – 96" HIGH – MIN (4) HINGES
   STD LOCATIONS: 9.75" FROM RABBET IN HEAD TO CL OF TOP HINGE
   10.38" FROM FLOOR TO CL OF BOTTOM HINGE, EQUALLY SPACED
   IN BETWEEN. HINGE LOCATIONS MAY VARY, MAX SPACING DO NOT EXCEED 35.5"
   APPROVED CONTINUOUS HINGE MODELS: IVES 112 HD, 224HD, 600, 700, MARKAR FM-300, HG-305, STANLEY 661HD, HAGER 780-224HD, 790-900, SELECT SL11HD, ABH A500 & A240HD
4. SEE SHEET 2 & 3 FOR AVAILABLE STANDARD OPENING SIZES AND SPECIFICATIONS.
5. HARDWARE INSTALLATION AS PER MANUFACTURER'S INSTRUCTIONS.
6. 4" FACE HEAD IS AVAILABLE FOR FRAMES.
7. APPLY CAULK AS NEEDED.
8. WEATHERSTRIPPING, SEE SHEET 5.
   –WHEN WATER INFILTRATION IS NOT NEEDED INSTALL WEATHERSTRIPPING PER SHT.5.
   –ONE ROW OF PS074 WEATHERSTRIPPING PER JAMB AND HEAD.
   –WHEN WATER INFILTRATION IS REQUIRED – INSTALL PER SHT.5.
9. SEE SHEET 10 FOR SECTION A–A, SEE SHEET 11 FOR SECTIONS B–B.
10. ELECTRICAL INSTALLATION IS UNDER SEPARATE APPROVAL AND MUST BE REVIEWED BY CORRESPONDING AUTHORITY.
11. OPTIONAL POWER TRANSFERS, MONITORING SWITCHES, SUPPLEMENTAL MAGNETIC LOCKS MAY BE USED AS ALLOWED BY CODE AND IT DOES NOT EFFECT THE MECHANICAL PROPERTIES OF EXIT DEVICE AND/OR INHIBIT EGRESS.
12. ITEMS 18 THROUGH 22 REQUIRED ONLY IF WATER INFILTRATION IS NEEDED.

BEND RADIUS

THIRD ANGLE PROJECTION

DRAWN YMF	DATE 05/20/07
CHECKED	
APPROVED	
ENG. APPVL JPD	10/11/07

Ingersoll Rand
Security Technologies

TITLE: MIAMI–DADE PRODUCT APPROVAL

H–SERIES FLUSH SINGLE DOORS (OUTSWING)
IR HARDWARE

SIZE	FLAT	DWG NO.	REV
		IRFS07	H

SCALE: NTS | AUTOCAD | SHEET 3 of 11

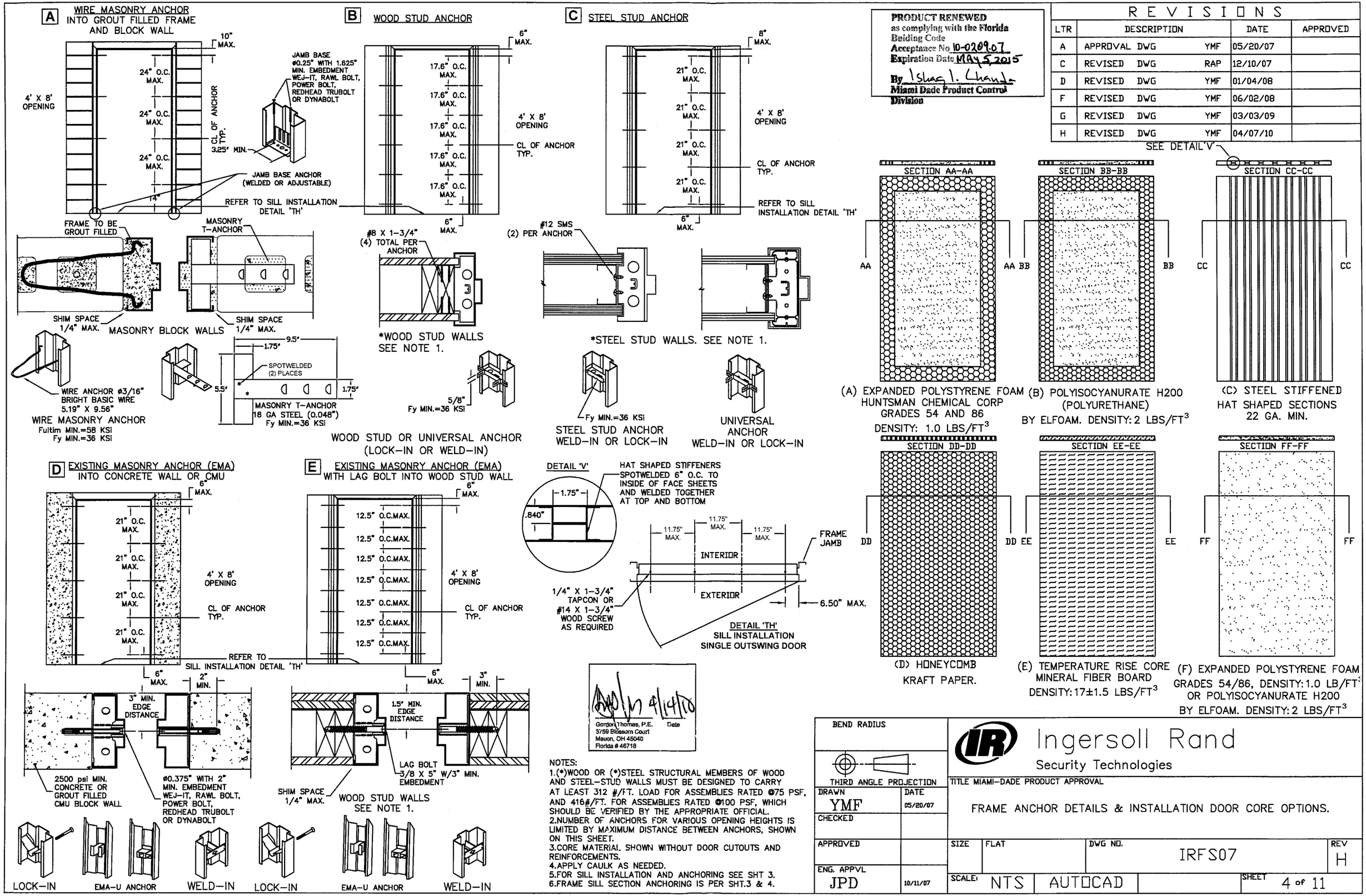

PRODUCT RENEWED
as complying with the Florida Building Code
Acceptance No 10-0209.07
Expiration Date MAY 5, 2015
By Shaq I. Chandler
Miami Dade Product Control Division

REVISIONS				
LTR	DESCRIPTION		DATE	APPROVED
A	APPROVAL DWG	YMF	05/20/07	
C	REVISED DWG	RAP	12/10/07	
D	REVISED DWG	YMF	01/04/08	
F	REVISED DWG	YMF	06/02/08	
G	REVISED DWG	YMF	03/03/09	
H	REVISED DWG	YMF	04/07/10	

TABLE 3.

PERIMETER SEAL HARDWARE WHEN WATER INFILTRATION REQUIREMENT DOES APPLY					
ITEM NUMBER SHT 3. TABLE 2	DESCRIPTION	ALLOWABLE DESIGN PRESSURE, PSF, UP TO*	MODEL No./ MANUFACTURER	PART DETAIL	INSTALL PER DETAIL
11	THRESHOLD	+75	566/ZERO INT'L	'T1'	'P1'
			950/NGP	'T2'	'P2'
14	FAS-SEAL SWEEP	+75	STEELCRAFT	'S'	'P1' & 'P2'
18 OR 13	SELF ADHESIVE DOOR SEAL	+75	8144F/ZERO INT'L	'U'	'M' & 'N'
			PS074/STEELCRAFT	'Q'	
19	DOOR SWEEP	+75	539/ZERO INT'L	'W1'	'N'
			202N/NGP	'W2'	
20	DOOR SWEEP	+75	139/ZERO INT'L	'X'	'P1'
21	ADJUSTABLE STOP	+75	475/ZERO INT'L	'Y1'	'M'
			170N/NGP	'Y2'	
22	RAIN DRIP CAP	+75	11/ZERO INT'L	'Z1'	'P1'
			16A/NGP	'Z2'	'P2'
23	DOOR TOP CAP	+75	STEELCRAFT	'R'	'M'

TABLE 4.

PERIMETER SEAL HARDWARE WHEN WATER INFILTRATION REQUIREMENT DOES NOT APPLY				
ITEM NUMBER SHT 3. TABLE 2	DESCRIPTION	MODEL No. MANUFACTURER	PART DETAIL	INSTALL PER DETAIL
11	THRESHOLD	566 BY ZERO INT'L	'T1'	'K'
		950 BY NATIONAL GUARD	'T2'	
14	FAS-SEAL DOOR SWEEP	STEELCRAFT	'S'	'K'
13	PS-074 SELF ADHESIVE WEATHERSTRIPPING	STEELCRAFT	'Q'	'J' & 'L'
23	DOOR TOP CAP	STEELCRAFT	'R'	OPTIONAL

* - SEE ELEVATION SHEET 1 FOR DESIGN PRESSURE RATINGS

Gordon Thomas, P.E.
3759 Blossom Court
Mason, OH 45040
Florida # 46718

4/14/10
Date

PRODUCT RENEWED
as complying with the Florida Building Code
Acceptance No. 10-0209.07
Expiration Date MAY 5, 2015
By Ishwar J. Chanda
Miami Dade Product Control Division

REVISIONS				
LTR	DESCRIPTION		DATE	APPROVED
A	APPROVAL DWG	YMF	05/20/07	
B	REVISED DWG	RAP	10/11/07	
C	REVISED DWG	RAP	12/10/07	
D	REVISED DWG	YMF	01/07/07	
E	REVISED DWG	YMF	04/03/08	
F	REVISED DWG	YMF	06/03/08	
G	REVISED DWG	YMF	03/03/09	
H	REVISED DWG	YMF	04/07/10	

NOTES:

1. SLOT LOCATIONS MAY VARY WITH DIFFERENT DOOR WIDTH.
2. DOOR SWEEP RIGID SECTION IS MADE OF PRO-FAX #PD-199 POLYPROPYLENE HOMOPOLYMER.
3. DOOR SWEEP FLEXIBLE SECTION IS MADE OF SANTOPRENE #101-73
4. FAS-SEAL DOOR SWEEP (14), AND THRESHOLD (11) ARE REQUIRED FOR ALL INSTALLATIONS.

PART DETAILS

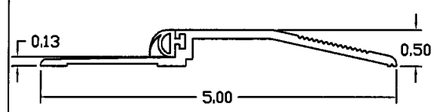

WHEN WATER INFILTRATION REQUIREMENT IS NEEDED - MAX. DP = +75 PSF

DETAIL 'T1'
ZERO INT'L 566 SERIES THRESHOLD APPROVED FOR WATER INFILTRATION REQUIREMENT, SINGLE DOORS

(11)

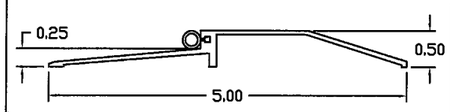

WHEN WATER INFILTRATION REQUIREMENT IS NEEDED - MAX. DP = +75 PSF

DETAIL 'T2'
NATIONAL GUARD 950 SERIES THRESHOLD WITH SILICONE, VINYL OR NEOPRENE BUMPER

(11)

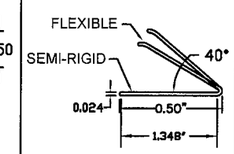

DETAIL 'Q'
PS-074
SELF-ADHESIVE WEATHERSTRIPPING

(13)

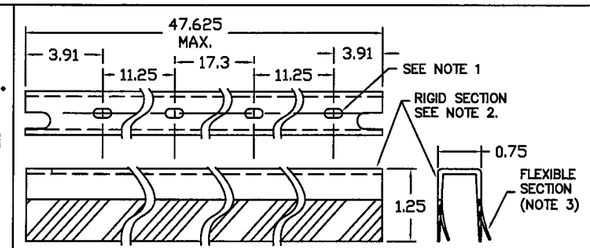

DETAIL 'S'
FAS-SEAL DOOR SWEEP

(14)

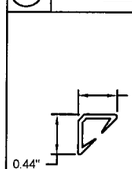

DETAIL 'U'
8144F
DOOR SEAL

(18)

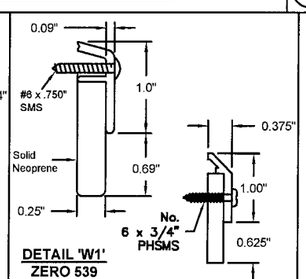

DETAIL 'W1'
ZERO 539
DOOR SWEEP

DETAIL 'W2'
NGP 202
DOOR SEAL

(19)

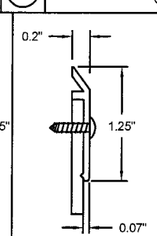

DETAIL 'X'
ZERO 139
DOOR SWEEP

(20)

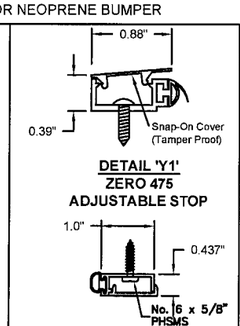

DETAIL 'Y1'
ZERO 475
ADJUSTABLE STOP

DETAIL 'Y2'
NGP 170N
ADJUSTABLE STOP

(21)

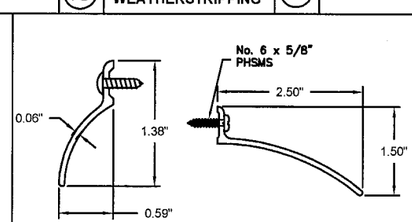

DETAIL 'Z1'
ZERO 11
RAIN DRIP CAP

DETAIL 'Z2'
NGP 16
RAIN DRIP CAP

(22)

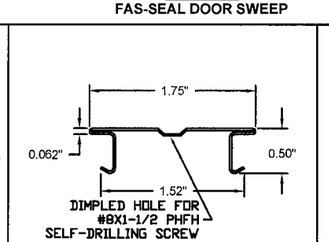

DETAIL 'R'
24 GA TOP CAP

(23)

PERIMETER SEAL INSTALLATION DETAILS WHEN WATER INFILTRATION REQUIREMENTS DO NOT APPLY

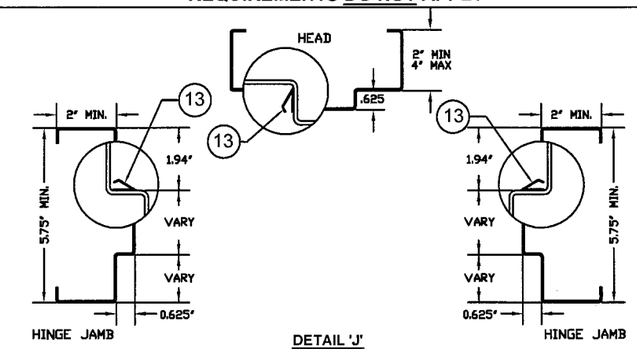

DETAIL 'J'
PERIMETER DOOR SEAL INSTALLATION IN HEAD AND JAMBS

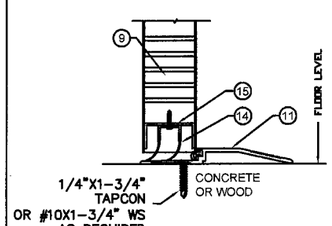

DETAIL 'K'
BOTTOM OF DOOR WEATHERSTRIPPING AND SILL INSTALLATION

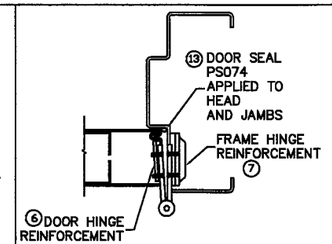

HINGE DETAIL 'L'
HINGE SIDE WEATHERSTRIPPING INSTALLATION

PERIMETER SEAL INSTALLATION DETAILS WHEN WATER INFILTRATION REQUIREMENTS APPLY

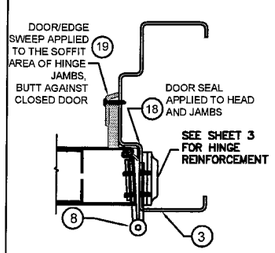

DETAIL 'N1'
HINGE JAMB
SWEEP INSTALLATIION

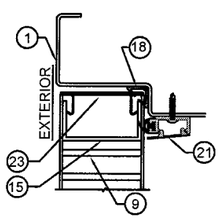

DETAIL 'M'
TOP OF DOOR/HEAD
WEATHERSTRIPPING

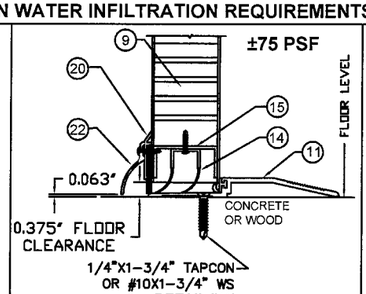

DETAIL 'P1'
BOTTOM OF DOOR
ZERO WEATHERSTRIPPING
AND SILL INSTALLATION

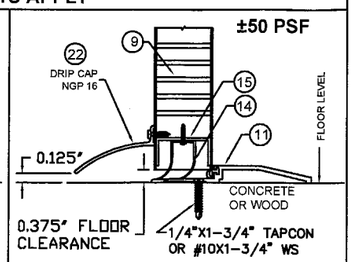

DETAIL 'P2'
BOTTOM OF DOOR
NGP WEATHERSTRIPPING
AND SILL INSTALLATION

BEND RADIUS

THIRD ANGLE PROJECTION

DRAWN	YMF	DATE 05/20/07
CHECKED		
APPROVED		
ENG. APPVL	JPD	10/11/07

Ingersoll Rand
Security Technologies

TITLE MIAMI-DADE PRODUCT APPROVAL

SINGLE FLUSH DOOR PERIMETER SEAL HARDWARE.

SIZE	FLAT	DWG NO.	REV
		IRFS07	H

SCALE: NTS | AUTOCAD | SHEET 5 of 11

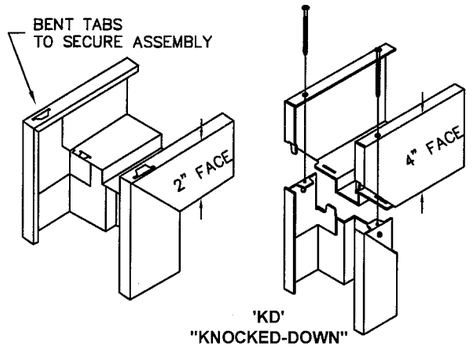

'KD'
"KNOCKED-DOWN"
ASSEMBLY

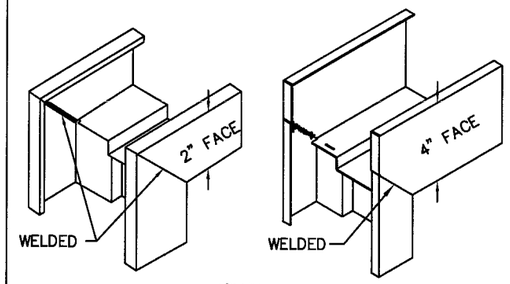

'SUA'
SET-UP AND ARC-WELDED
ASSEMBLY

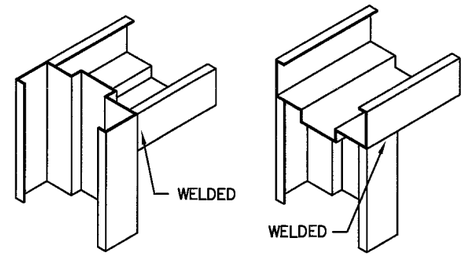

HEAD NOTCHED
AND BUTTED BETWEEN JAMBS

HEAD SITS ON TOP
OF NOTCHED JAMBS

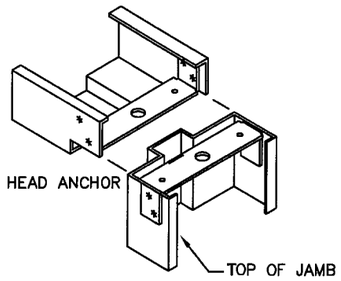

HEAD NOTCHED
AND BOLTED ON TOP OF JAMBS

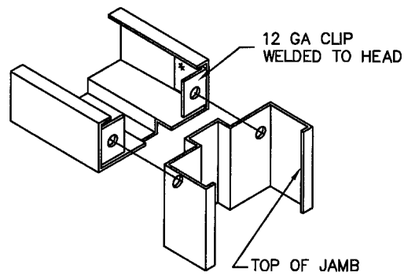

HEAD NOTCHED
AND BOLTED BETWEEN JAMBS

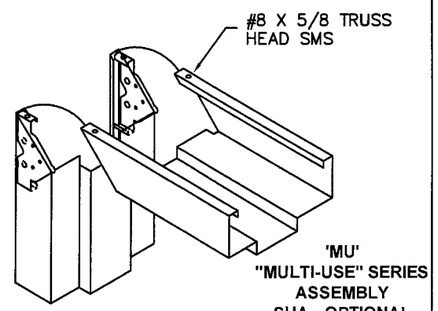

'MU'
"MULTI-USE" SERIES
ASSEMBLY
SUA - OPTIONAL

REVISIONS

LTR	DESCRIPTION		DATE	APPROVED
A	APPROVAL DWG	YMF	05/20/07	
B	REVISED DWG	RAP	10/11/07	
C	REVISED DWG	RAP	12/10/07	
D	REVISED DWG	YMF	01/08/08	
E	REVISED DWG	YMF	04/08/08	
F	REVISED DWG	YMF	06/03/08	
G	REVISED DWG	YMF	03/03/09	
H	REVISED DWG	YMF	04/07/10	

TABLE 5. AVAILABLE DOOR CONFIGURATIONS

CORE MATERIAL PER SHT.4	MAXIMUM OPENING SIZE WIDTH | HEIGHT	SKIN MATERIAL DESCR.	SKIN MATERIAL GA./MIN. THK
HONEYCOMB POLYSTYRENE POLYURETHANE (POLYISOCYANURATE) TEMPERATURE RISE STEEL STIFFENED	VARIES SEE SHEET 2 TABLE 1	CRS GALV	16/.053" 14/.067"
HONEYCOMB POLYSTYRENE POLYURETHANE	VARIES SEE SHEET 2 TABLE 1	STAINLESS STEEL	16/.053"

TABLE 6. AVAILABLE FRAME CONFIGURATIONS

FRAME SERIES	JAMB DEPTH	MAX. OPENING SIZE WIDTH | HEIGHT	MATERIAL DESCR.	MATERIAL GA./MIN. THK
F	5.75" MIN.	VARIES SEE SHEET 2 TABLE 1	CRS/HRS GALV	16/.053" 14/.067" 12/.099"
			STAINLESS STEEL	16/.053"
MU	5.75" MIN.	VARIES SEE SHEET 2 TABLE 1	CRS/HRS GALV	16/.053" 14/.067"

TABLE 7. STEEL MECHANICAL PROPERTIES

MATERIAL	ASTM REF.	YIELD KSi	TENSILE KSi
CRS	A1008	MIN. 30.1	MIN. 44.7
HRS	A1011		
GALV: A60	A924		
SS: 304,306	A240	MIN. 31.2	MIN. 73.2

TYPICAL FRAME PROFILE
DOUBLE RABBET

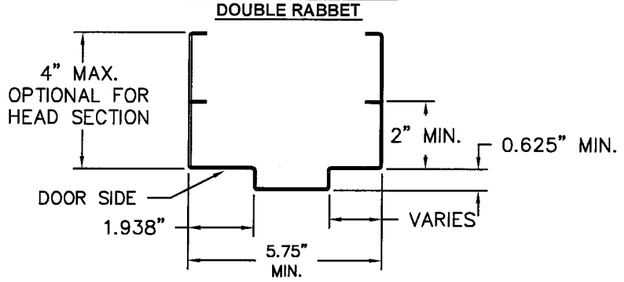

OPTIONAL FRAME PROFILE
SINGLE RABBET

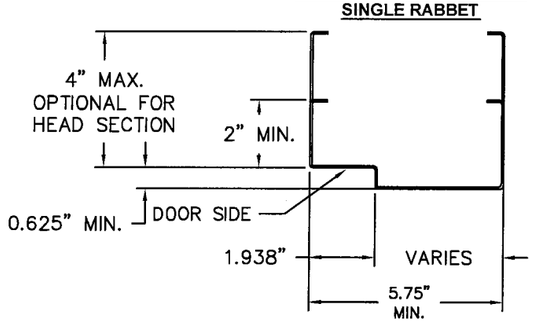

AVAILABLE DOOR PANEL CONFIGURATIONS

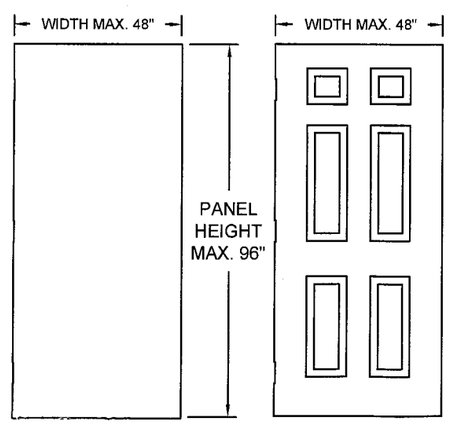

FLUSH

EMBOSSED PANEL

NOTES:

1. DOOR CONSTRUCTION
1.1. MINIMUM DOOR THICKNESS – 1 3/4"
1.2. DOOR SIZE MAY VARY, SUBJECTED TO COMPLIANCE WITH FLORIDA BUILDING CODE AND PRODUCT AVAILABILITY FROM MANUFACTURER (SEE SHEET 2 FOR AVAILABLE HARDWARE)

2. FRAME CONSTRUCTION
1.1. MINIMUM JAMB DEPTH – 5 3/4", STOP HEIGHT – 5/8"
2.2. FRAMES AVAILABLE AS FLUSH (F–SERIES) AND MULT–USE (MU–SERIES) (SEE TABLE 6)

3. FOR MATERIAL SPECIFICATIONS REFERENCE SEE TABLE 7.

4/14/10
Gordon Thomas, P.E. Date
3759 Blossom Court
Mason, OH 45040
Florida # 46718

PRODUCT RENEWED
as complying with the Florida Building Code
Acceptance No. 10-0209.07
Expiration Date MAY 05, 2015
By Ishaq I. Chanda
Miami Dade Product Control Division

BEND RADIUS

THIRD ANGLE PROJECTION

DRAWN YMF	DATE 05/20/07
CHECKED	
APPROVED	
ENG. APPVL JPD	10/11/07

Ingersoll Rand
Security Technologies

TITLE MIAMI–DADE PRODUCT APPROVAL

FRAME PROFILE, CORNER DETAILS AND DOOR FRAME MATERIAL, AND SIZE OPTIONS

SIZE	FLAT	DWG NO.	REV
		IRFS07	H

SCALE: NTS | AUTOCAD | SHEET 6 of 11

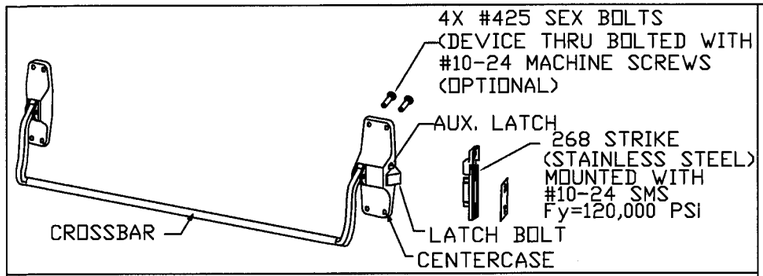

RIM EXIT DEVICE VON DUPRIN 88-F
USED IN **DOOR CONFIGURATION 8** (SEE SHT.1)

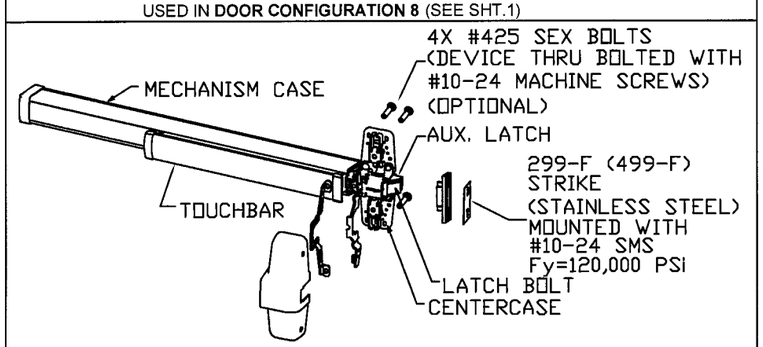

RIM EXIT DEVICE VON DUPRIN 98/99(F)
USED IN **DOOR CONFIGURATION 8** (SEE SHT.1)

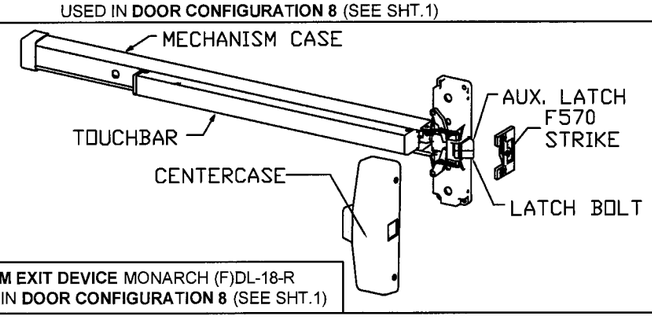

RIM EXIT DEVICE MONARCH (F)DL-18-R
USED IN **DOOR CONFIGURATION 8** (SEE SHT.1)

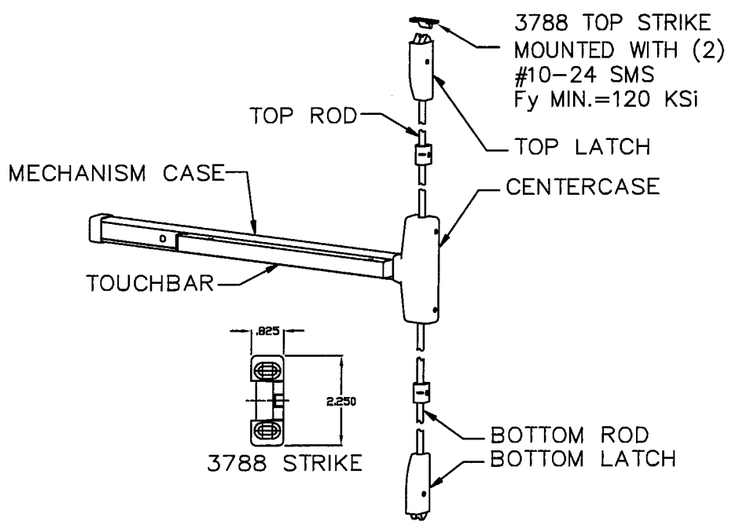

SURFACE VERTICAL ROD EXIT DEVICE
MONARCH (F)18-V
USED IN **DOOR CONFIGURATION 5** (SEE SHT.1)

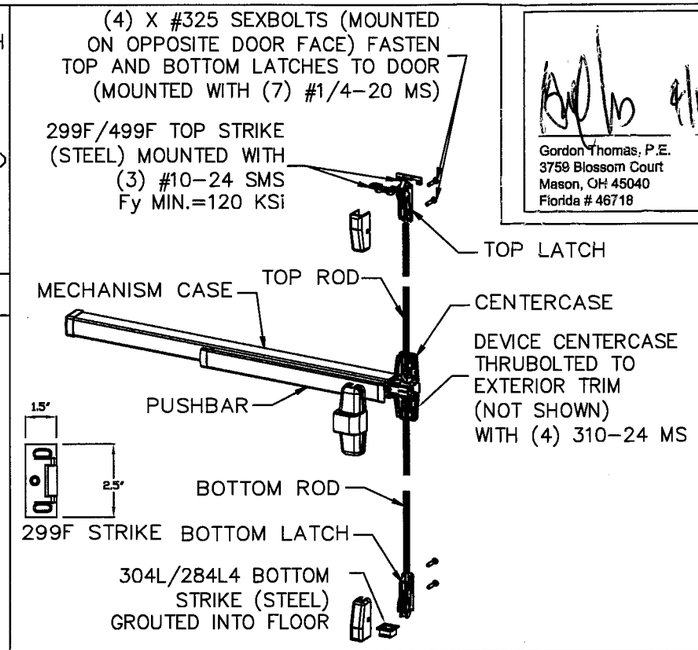

SURFACE VERTICAL ROD EXIT DEVICE VON DUPRIN 98/9927(F)
USED IN **DOOR CONFIGURATION 5** (SEE SHT.1)

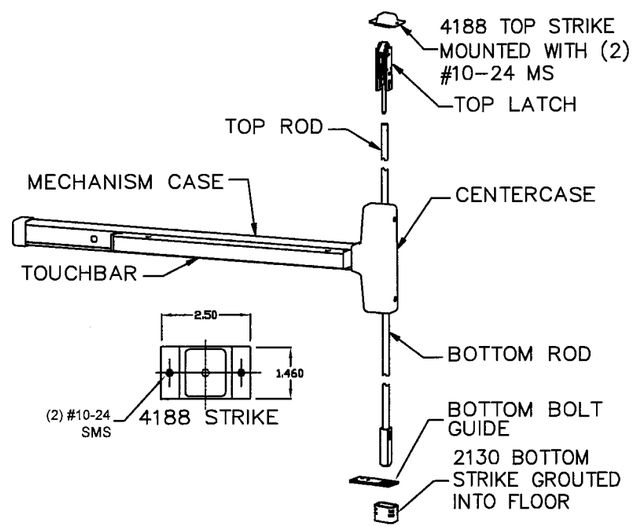

CONCEALED VERTICAL ROD EXIT DEVICE MONARCH F-18-C
USED IN **DOOR CONFIGURATION 6** (SEE SHT.1)

Gordon Thomas, P.E.
3759 Blossom Court
Mason, OH 45040
Florida # 46718

4/14/10
Date

PRODUCT RENEWED
as complying with the Florida
Building Code
Acceptance No. 10-0209.07
Expiration Date MAY 5, 2015
By Ishaq I. Chaudhry
Miami Dade Product Control
Division

NOTE:
ELECTRICAL FUNCTIONS/INSTALLATION
IS NOT PART OF THIS APPROVAL AND
TO BE REVIEWED BY BUILDING OFFICIAL

REVISIONS				
LTR	DESCRIPTION		DATE	APPROVED
A	APPROVAL DWG	YMF	05/20/07	
B	REVISED DWG	RAP	10/11/07	
C	REVISED DWG	RAP	12/10/07	
D	REVISED DWG	YMF	01/08/08	
F	REVISED DWG	YMF	06/03/08	
G	REVISED DWG	YMF	03/03/09	
H	REVISED DWG	YMF	04/07/10	

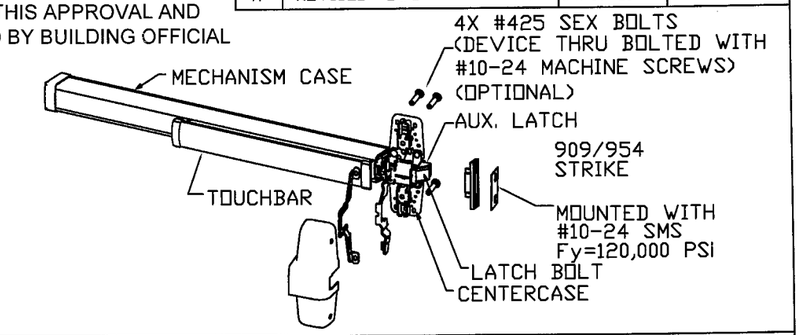

RIM EXIT DEVICE VON DUPRIN XP98/99(F)
USED IN **DOOR CONFIGURATION 9** (SEE SHT.1)

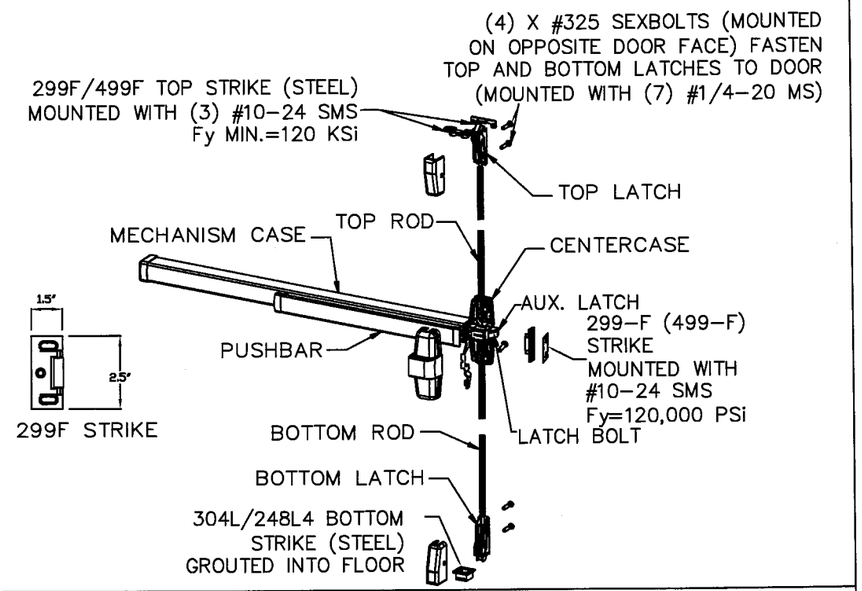

THREE-POINT EXIT DEVICE VON DUPRIN 98/9957(F)
USED IN **DOOR CONFIGURATION 7** (SEE SHT.1)

EXIT HARDWARE OPTIONS:
FOR 98/99 & XP98/99 SERIES - FUNCTIONS E, RX, LX, SS, EL, CX, F
TRIMS: ALL APPLICABLE TRIMS AVAILABLE.
FOR 88-F SERIES - FUNCTION E
TRIMS: ALL APPLICABLE TRIMS AVAILABLE.
PN MODEL OFFERED.
FOR 2670 GUARD-X
TRIMS: ALL APPLICABLE TRIMS AVAILABLE.
FOR 18-R, 18-C & 18-V SERIES - FUNCTIONS DL,EA, HWEA,DE,ELR,F,DM,LM,AE,LK,SM
TRIMS: ALL APPLICABLE TRIMS AVAILABLE.

NOTE: ELECTRIC/ELECTRONIC FUNCTION IS NOT PART OF THIS APPROVAL AND MUST BE REVIEWED BY AUTHORITY HAVING JURISDICTION

BEND RADIUS

THIRD ANGLE PROJECTION

DRAWN YMF	DATE 05/20/07		
CHECKED	CDATE		
APPROVED	ADATE	SIZE FLAT	DWG NO. IRFS07 REV H
ENG. APPVL JPD	EDATE 10/11/07	SCALE: NTS AUTOCAD	SHEET 7 of 11

Ingersoll Rand
Security Technologies

TITLE MIAMI-DADE PRODUCT APPROVAL

IR EXIT HARDWARE OPTIONS FOR FLUSH SINGLE DOORS

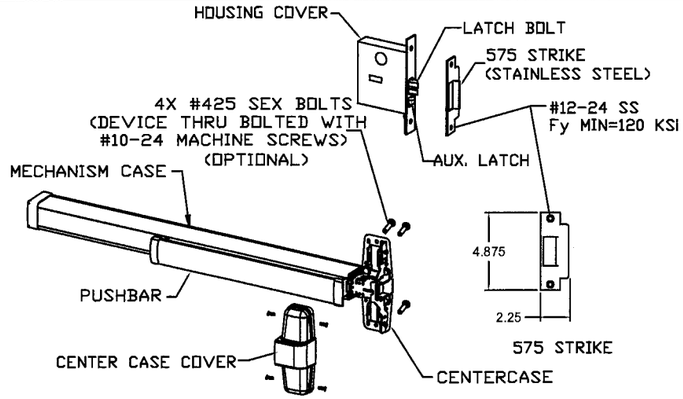

MORTISE EXIT DEVICE VON DUPRIN 98/9975(F)
USED IN **DOOR CONFIGURATION 10** (SEE SHT.1)

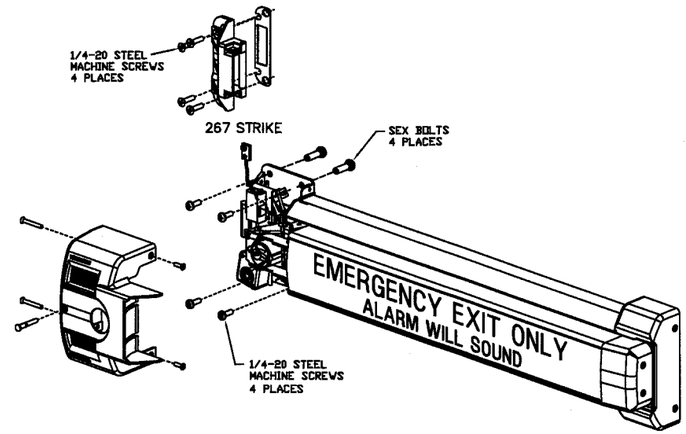

EXIT ALARM LOCK VON DUPRIN 2670 GUARD-X
USED IN **DOOR CONFIGURATION 11** (SEE SHT.1)

MORTISE EXIT DEVICE VON DUPRIN 8875(F)
USED IN **DOOR CONFIGURATION 10** (SEE SHT.1)

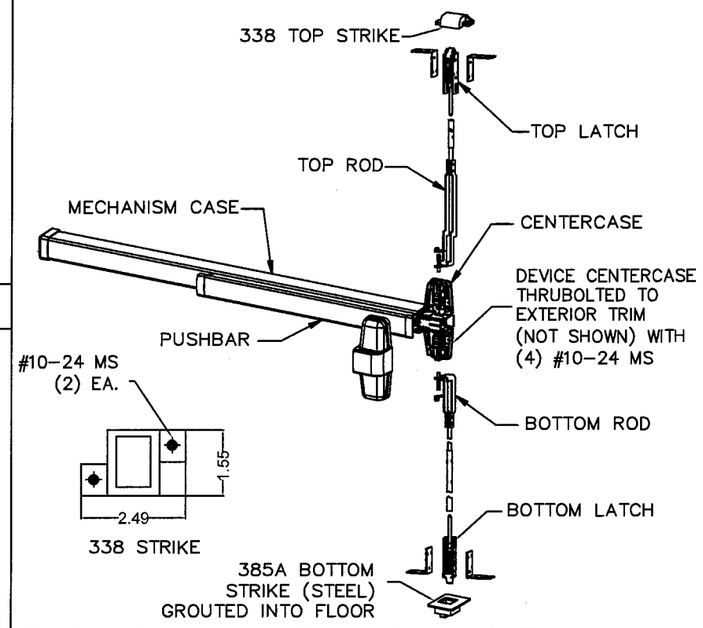

CONCEALED VERTICAL ROD EXIT DEVICE VON DUPRIN 98/9947-F
USED IN **DOOR CONFIGURATION 6** (SEE SHT.1)

MORTISE EXIT DEVICE FALCON (F)25-M
USED IN **DOOR CONFIGURATION 10** (SEE SHT.1)

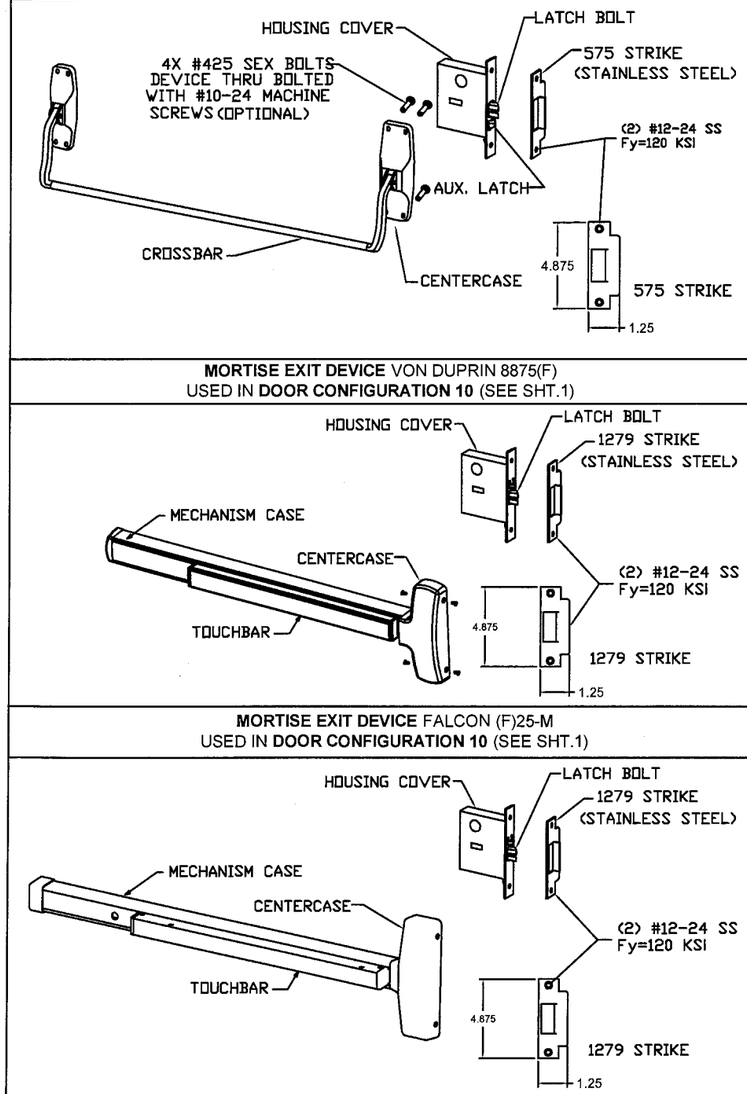

MORTISE EXIT DEVICE MONARCH (F)18-M
USED IN **DOOR CONFIGURATION 10** (SEE SHT.1)

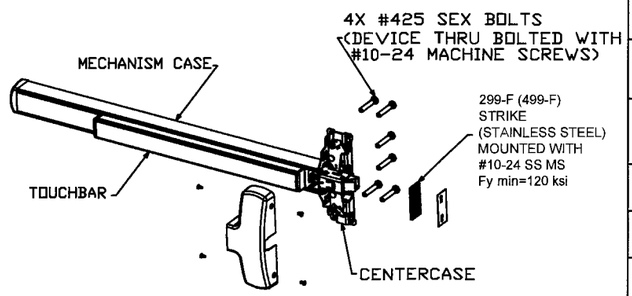

RIM EXIT DEVICE FALCON (F)25-R
USED IN **DOOR CONFIGURATION 13** (SEE SHT.1)

PRODUCT RENEWED
as complying with the Florida
Building Code
Acceptance No 10-0209.07
Expiration Date MAY 05, 2015
By Ishaq I. Chanda
Miami Dade Product Control
Division

REVISIONS				
LTR	DESCRIPTION		DATE	APPROVED
A	APPROVAL DWG	YMF	05/20/07	
B	REVISED DWG	RAP	10/11/07	
C	REVISED DWG	RAP	12/10/07	
D	REVISED DWG	YMF	12/10/07	
E	REVISED DWG	YMF	04/08/08	
F	REVISED DWG	YMF	06/03/08	
G	REVISED DWG	YMF	03/03/09	
H	REVISED DWG	YMF	04/07/10	

NOTES:
1. ELECTRICAL FUNCTIONS/INSTALLATION IS NOT PART OF THIS APPROVAL AND TO BE REVIEWED BY BUILDING OFFICIAL

2. EXIT HARDWARE OPTIONS:
FOR 98/99 & XP98/99 SERIES - FUNCTIONS E, RX, LX, SS, EL, CX, F
TRIMS: ALL APPLICABLE TRIMS AVAILABLE.
FOR 88-F SERIES - FUNCTION E
TRIMS: ALL APPLICABLE TRIMS AVAILABLE. PN MODEL OFFERED.
FOR 2670 GUARD-X
TRIMS: ALL APPLICABLE TRIMS AVAILABLE.
FOR 18-R, 18-C & 18-V SERIES - FUNCTIONS DL,EA, HWEA,DE,ELR,F,DM,LM,AE,LK,SM
TRIMS: ALL APPLICABLE TRIMS AVAILABLE.
FOR (F)25-R, F-25-C & (F)25-V SERIES - FUNCTIONS AE, DM, LM, LK, KOR, ED, EL, EA, FSA, FSE, HWEA
TRIMS: ALL APPLICABLE TRIMS AVAILABLE.

4/14/10
Gordon Thomas, P.E. Date
3759 Blossom Court
Mason, OH 45040
Florida # 46718

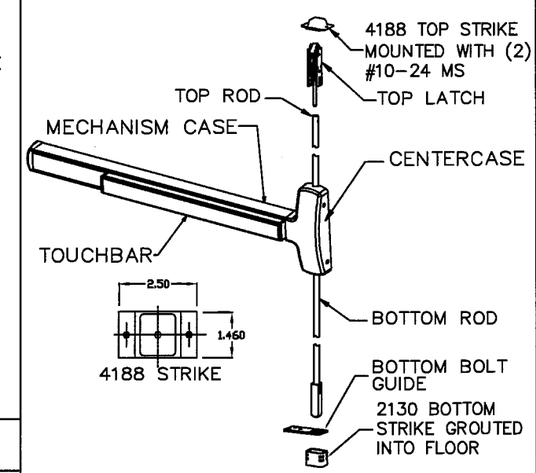

CONCEALED VERTICAL ROD EXIT DEVICE FALCON F-25-C
USED IN **DOOR CONFIGURATION 6** (SEE SHT.1)

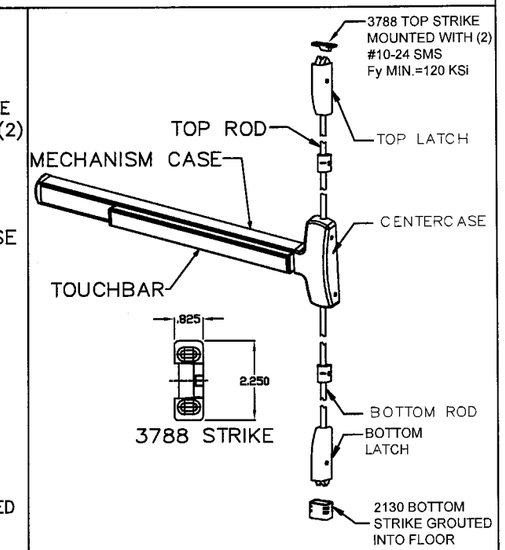

SURFACE VERTICAL ROD EXIT DEVICE FALCON (F)25-V
USED IN **DOOR CONFIGURATION 5** (SEE SHT.1)

BEND RADIUS BEND RADIUS

THIRD ANGLE PROJECTION

Ingersoll Rand
Security Technologies

TITLE MIAMI-DADE PRODUCT APPROVAL

IR EXIT HARDWARE OPTIONS FOR FLUSH SINGLE DOORS.

DRAWN YMF	DATE 05/20/07		
CHECKED			
APPROVED		SIZE FLAT	DWG NO. IRFS07	REV H
ENG. APPVL JPD	10/11/07	SCALE: NTS	AUTOCAD	SHEET 8 of 11

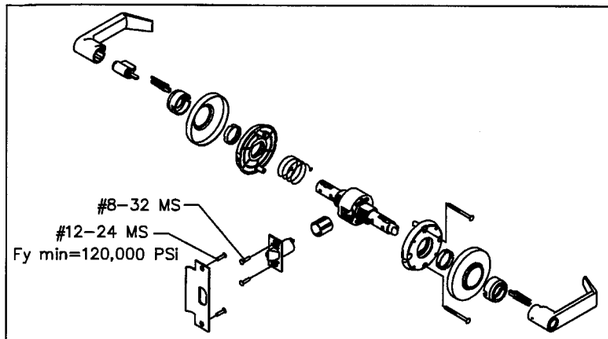

CYLINDRICAL LOCKSET WITH 1/2" THROW LATCH SCHLAGE AL-SERIES
USED IN **DOOR CONFIGURATION 2** (SEE SHT.1)

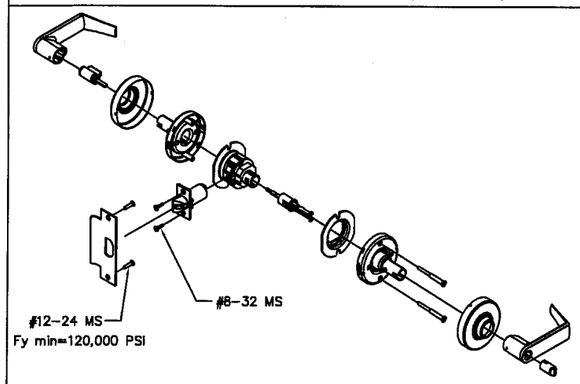

CYLINDRICAL LOCKSET SCHLAGE D/ND-SERIES
USED IN **DOOR CONFIGURATIONS 3 & 4** (SEE SHT.1)

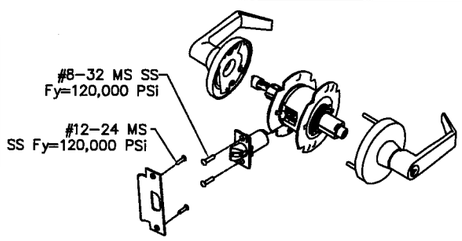

CYLINDRICAL LOCKSET FALCON T-SERIES
USED IN **DOOR CONFIGURATIONS 4** (SEE SHT.1)

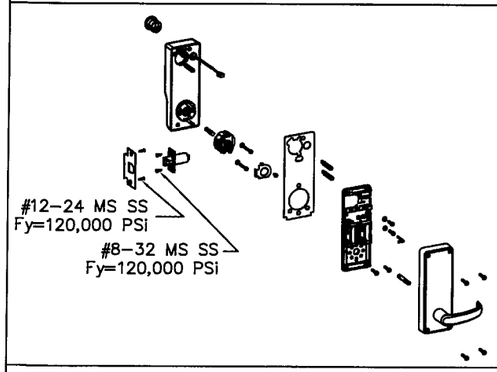

CYLINDRICAL LOCKSET LOCKNETICS / SCHLAGE 5100 SERIES
USED IN **DOOR CONFIGURATION 4** (SEE SHT.1)

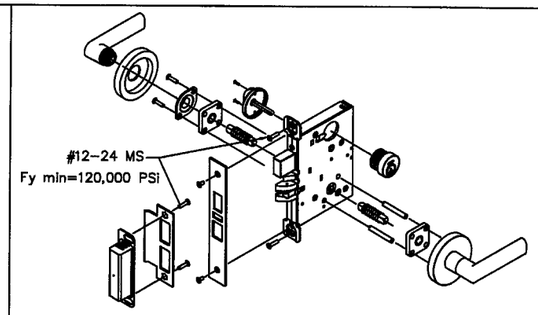

MORTISE LOCKSET WITH DEADBOLT FUNCTION SCHLAGE L/LV 9400 SERIES
USED IN **DOOR CONFIGURATION 1** (SEE SHT.1)

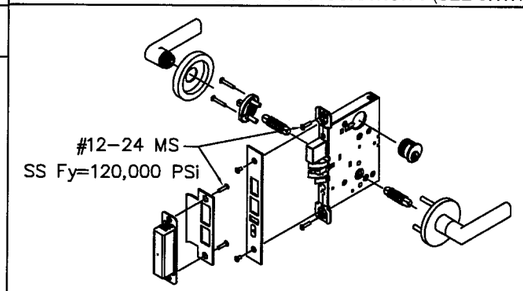

MORTISE LOCKSET WITH DEADBOLT FUNCTION FALCON M-SERIES
USED IN **DOOR CONFIGURATION 1** (SEE SHT.1)

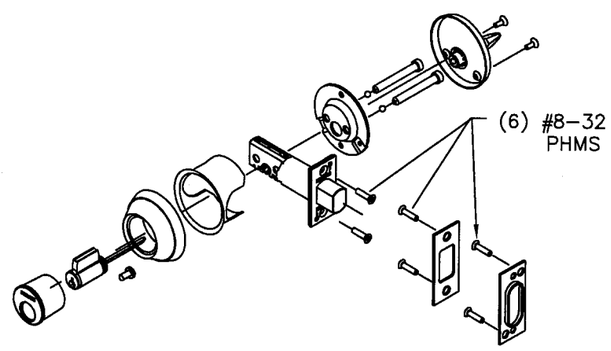

CYLINDRICAL DEADLOCK FALCON D400/800-SERIES & SCHLAGE B600/700/800
USED IN **DOOR CONFIGURATION 12** (SEE SHT.1)

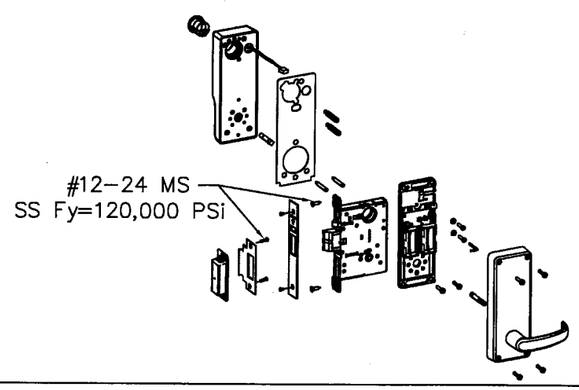

MORTISE LOCKSET WITH AUTOBOLT LOCKNETICS / SCHLAGE 5500 SERIES
USED IN **DOOR CONFIGURATION 1** (SEE SHT.1)

Gordon Thomas, P.E. 4/14/10 Date
3759 Blossom Court
Mason, OH 45040
Florida # 46718

PRODUCT RENEWED
as complying with the Florida
Buiding Code
Acceptance No 10-0209.07
Expiration Date MAY, 05, 2015
By Ishaq I. Chunde
Miami Dade Product Control
Division

NOTE:
ELECTRICAL FUNCTIONS/INSTALLATION
IS NOT PART OF THIS APPROVAL AND
TO BE REVIEWED BY BUILDING OFFICIAL

REVISIONS

LTR	DESCRIPTION			DATE	APPROVED
A	APPROVAL	DWG	YMF	05/20/07	
B	REVISED	DWG	RAP	10/11/07	
C	REVISED	DWG	RAP	12/10/07	
D	REVISED	DWG	YMF	01/08/08	
E	REVISED	DWG	YMF	04/08/08	
F	REVISED	DWG	YMF	06/03/08	
G	REVISED	DWG	YMF	03/03/09	
H	REVISED	DWG	YMF	04/07/10	

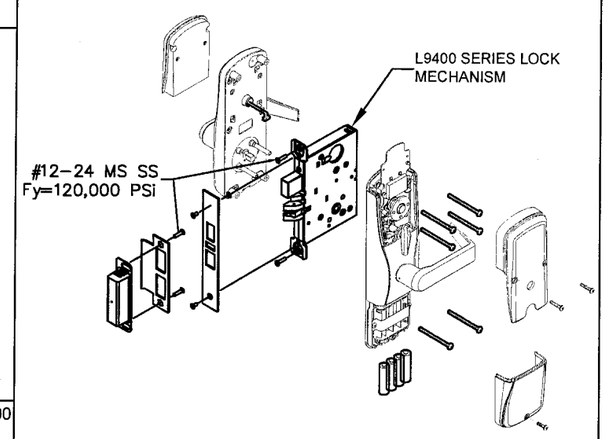

SCHLAGE CO/AD MS SERIES MORTISE LOCKSET W/DEADBOLT
USED IN CONFIGURATIONS: 1 (SEE SHT. 1)

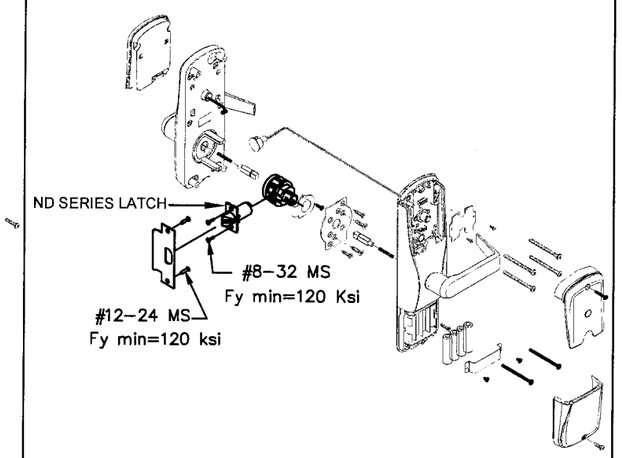

SCHLAGE CO/AD CY SERIES CYLINDRICAL LOCKSET
USED IN CONFIGURATIONS: 3&4 (SEE SHT.1)

BEND RADIUS

THIRD ANGLE PROJECTION

DRAWN YMF	DATE 05/20/07
CHECKED	
APPROVED	
ENG. APPVL JPD	10/11/07

Ingersoll Rand
Security Technologies

TITLE MIAMI–DADE PRODUCT APPROVAL

IR HARDWARE OPTIONS FOR FLUSH SINGLE DOORS.

SIZE	FLAT	DWG NO.	REV
		IRFS07	H

SCALE: NTS AUTOCAD SHEET 9 of 11

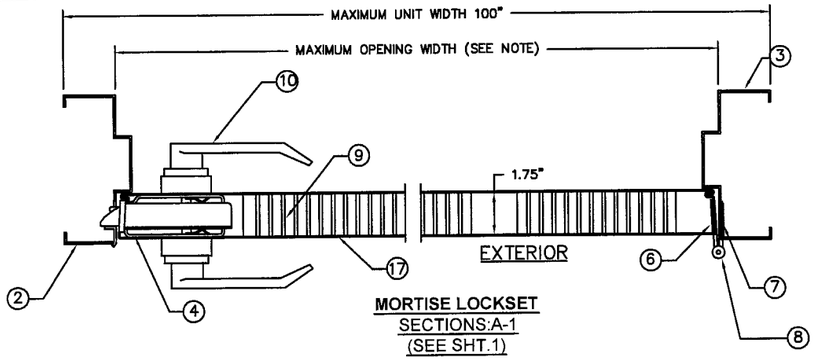

MORTISE LOCKSET
SECTIONS:A-1
(SEE SHT.1)

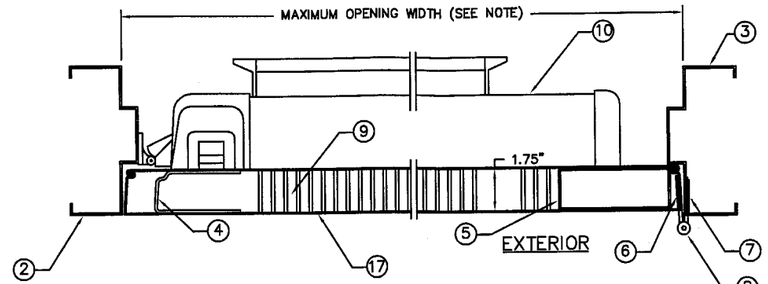

THREE-POINT EXIT DEVICE
SECTION A-7 (SEE SHT.1)

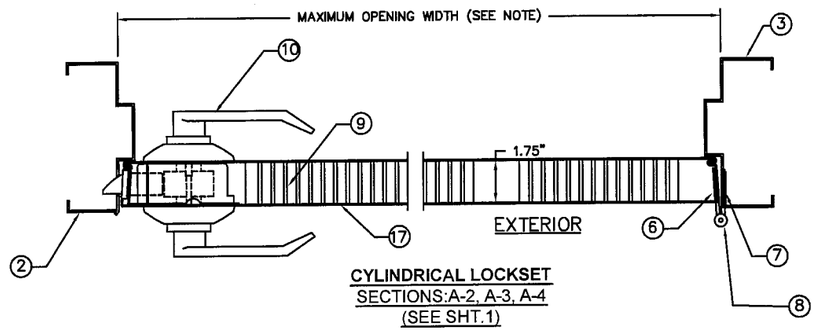

CYLINDRICAL LOCKSET
SECTIONS:A-2, A-3, A-4
(SEE SHT.1)

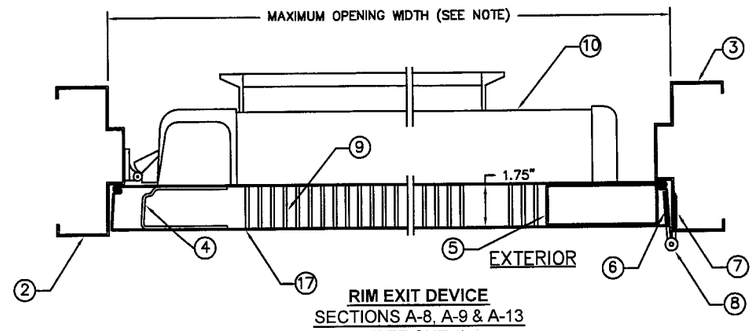

RIM EXIT DEVICE
SECTIONS A-8, A-9 & A-13
(SEE SHT.1)

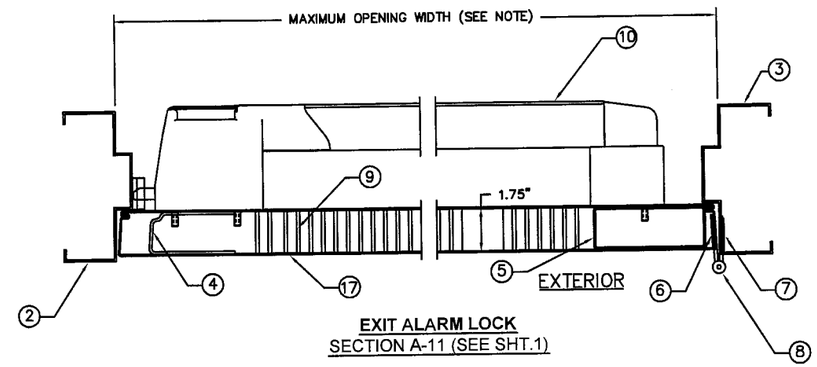

EXIT ALARM LOCK
SECTION A-11 (SEE SHT.1)

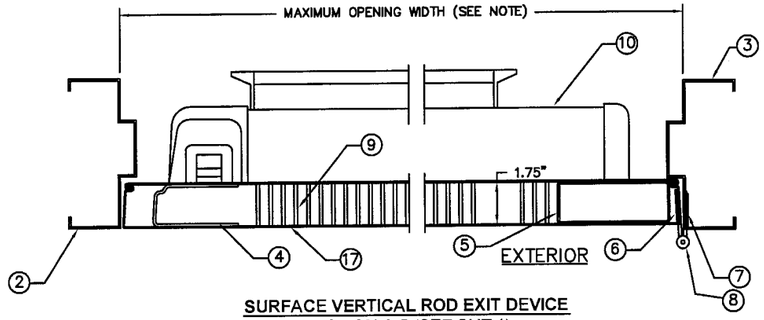

SURFACE VERTICAL ROD EXIT DEVICE
SECTION A-5 (SEE SHT.1)

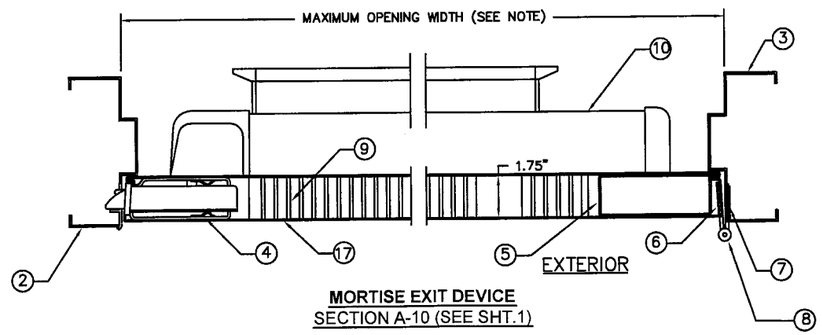

MORTISE EXIT DEVICE
SECTION A-10 (SEE SHT.1)

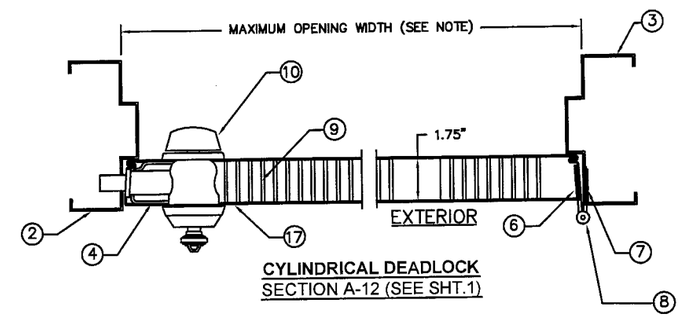

CYLINDRICAL DEADLOCK
SECTION A-12 (SEE SHT.1)

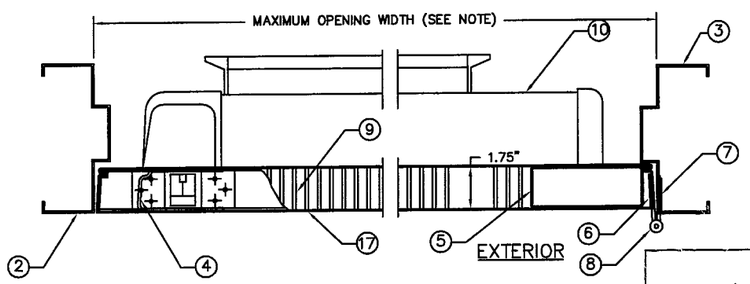

CONCEALED VERTICAL ROD EXIT DEVICE
SECTION A-6 (SEE SHT.1)

REVISIONS

LTR	DESCRIPTION			DATE	APPROVED
A	APPROVAL	DWG	YMF	05/20/07	
B	REVISED	DWG	RAP	10/11/07	
C	REVISED	DWG	RAP	12/10/07	
D	REVISED	DWG	YMF	12/10/07	
E	REVISED	DWG	YMF	04/08/08	
F	REVISED	DWG	YMF	06/03/08	
G	REVISED	DWG	YMF	03/04/09	
H	REVISED	DWG	YMF	04/07/10	

NOTE:
FOR MAXIMUM OPENING SIZE SEE TABLE 1 ON SHEET 2 OF 11.

4/14/10
Gordon Thomas, P.E. Date
3759 Blossom Court
Mason, OH 45040
Florida # 46718

PRODUCT RENEWED
as complying with the Florida
Buiding Code
Acceptance No 10-0209.07
Expiration Date MAY 5, 2015
By Ishaq I. Llanda
Miami Dade Product Control
Division

BEND RADIUS

THIRD ANGLE PROJECTION

DRAWN YMF	DATE 05/20/007
CHECKED	
APPROVED	
ENG. APPVL JPD	10/11/07

Ingersoll Rand
Security Technologies

TITLE MIAMI-DADE PRODUCT APPROVAL

HORIZONTAL CROSS SECTIONS FOR FLUSH SINGLE DOORS.

SIZE	FLAT	DWG NO.	REV
		IRFS07	H

SCALE: NTS | AUTOCAD | SHEET 10 of 11

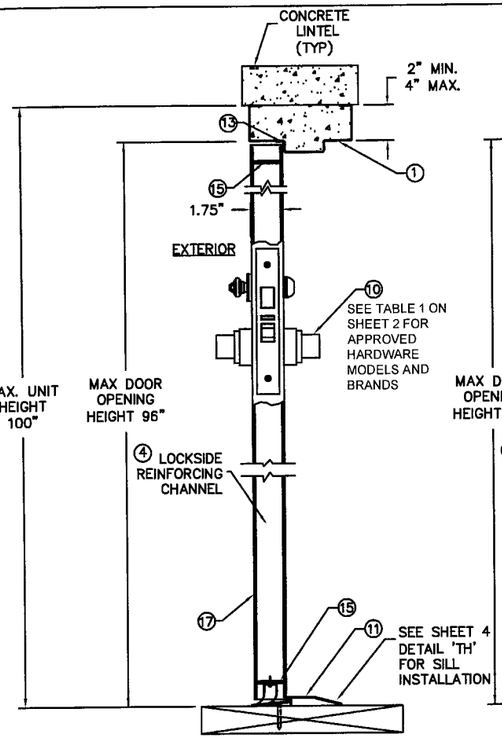

MORTISE LOCKSET
SECTION: B-1
(SEE SHT.1)

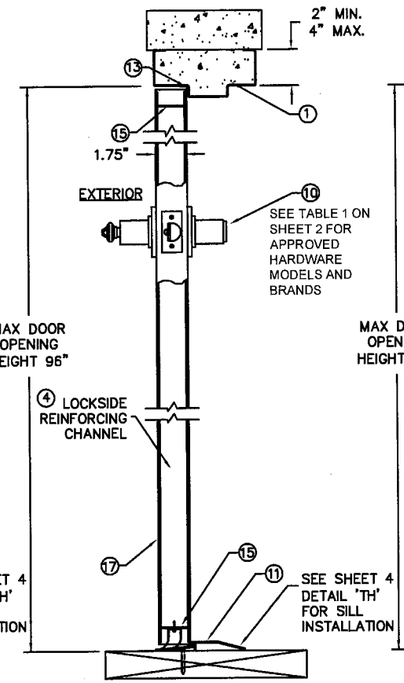

CYLINDRICAL LOCKSET
SECTIONS:B-1, B-2 & B-3
(SEE SHT.1)

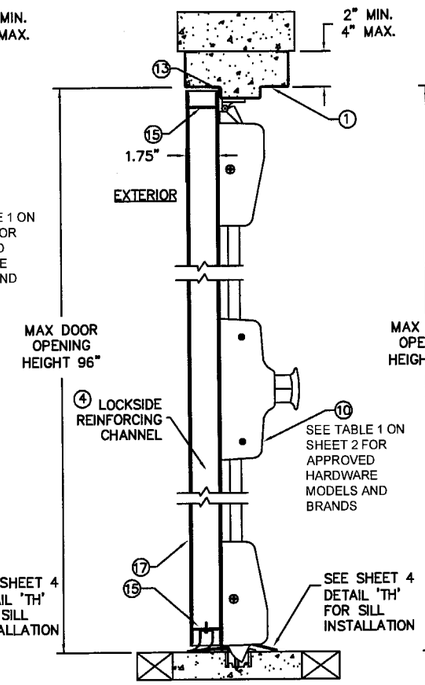

SURFACE VERTICAL ROD EXIT DEVICE
SECTION B-5 (SEE SHT.1)

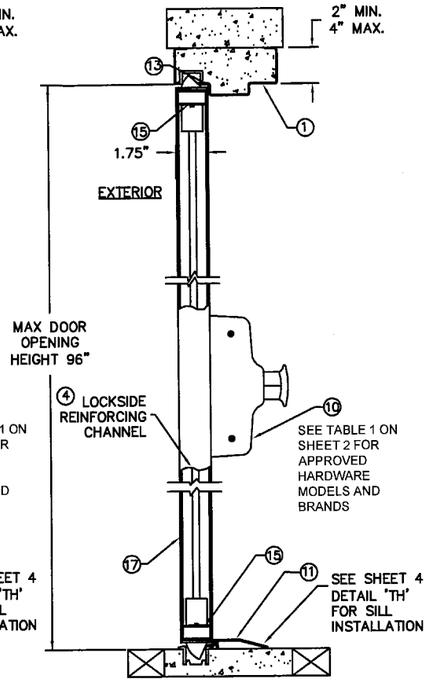

CONCEALED VERTICAL ROD EXIT DEVICE
SECTION B-6 (SEE SHT.1)

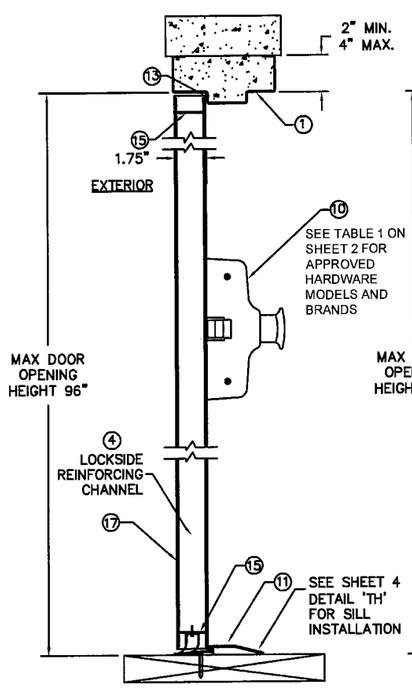

RIM EXIT DEVICE
SECTIONS B-8, B-9 & B-13
(SEE SHT.1)

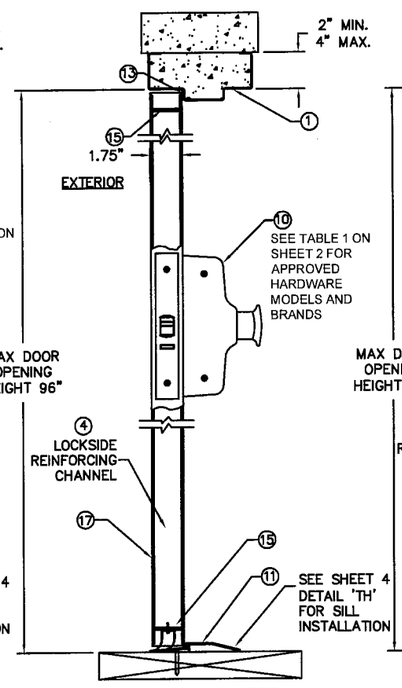

MORTISE EXIT DEVICE
SECTION B-10 (SEE SHT.1)

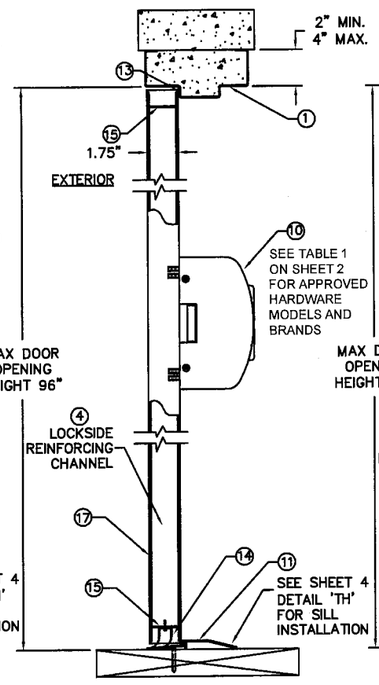

EXIT ALARM LOCK
SECTION B-11 (SEE SHT.1)

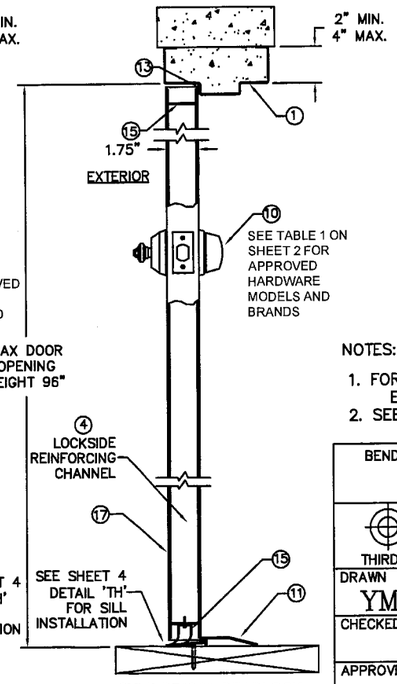

CYLINDRICAL DEADLOCK
SECTION B-12 (SEE SHT.1)

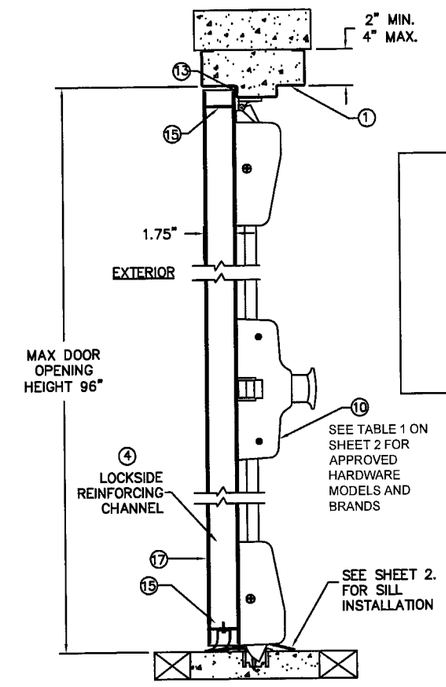

THREE-POINT EXIT DEVICE
SECTION B-7 (SEE SHT.1)

NOTES:

1. FOR MAXIMUM DOOR & UNIT OPENING SIZES SEE ELEVATION SHEET 1 AND TABLE 1 ON SHEET 2 OF 11.
2. SEE SHEET 4 OF 11 FOR ANCHOR INSTALLATION DETAILS.

PRODUCT RENEWED
as complying with the **Florida** Buiding Code
Acceptance No 10-0209.07
Expiration Date May 5, 2015
By Ishaq I. Chanda
Miami Dade Product Control Division

Gordon Thomas, P.E.
3759 Blossom Court
Mason, OH 45040
Florida # 46718
4/14/10
Date

REVISIONS

LTR	DESCRIPTION			DATE	APPROVED
A	APPROVAL	DWG	YMF	05/20/07	
B	REVISED	DWG	RAP	10/11/07	
C	REVISED	DWG	RAP	12/10/07	
D	REVISED	DWG	YMF	01/08/08	
E	REVISED	DWG	YMF	04/08/08	
F	REVISED	DWG	YMF	06/03/08	
G	REVISED	DWG	YMF	03/04/09	
H	REVISED	DWG	YMF	04/07/10	

BEND RADIUS

THIRD ANGLE PROJECTION

DRAWN YMF	DATE 05/20/07
CHECKED	
APPROVED	
ENG. APPVL JPD	10/11/07

Ingersoll Rand
Security Technologies

TITLE MIAMI-DADE PRODUCT APPROVAL

VERTICAL CROSS SECTIONS FOR FLUSH SINGLE DOORS.

SIZE	FLAT	DWG NO.	IRFS07	REV
SCALE: NTS	AUTOCAD		SHEET 11 of 11	H