MIAMI-DADE COUNTY
BUILDING CODE COMPLIANCE OFFICE (BCCO)
PRODUCT CONTROL DIVISION

MIAMI-DADE COUNTY, FLORIDA
METRO-DADE FLAGLER BUILDING

140 WEST FLAGLER STREET, SUITE 1603
MIAMI, FLORIDA 33130-1563
(305) 375-2901 FAX (305) 375-2908
www.miamidade.gov

NOTICE OF ACCEPTANCE (NOA)

J M Steel Corporation
1050 North Steel Circle
Huger, SC 294500

SCOPE:
This NOA is being issued under the applicable rules and regulations governing the use of construction materials. The documentation submitted has been reviewed by Miami-Dade County Product Control Division and accepted by the Board of Rules and Appeals (BORA) to be used in Miami Dade County and other areas where allowed by the Authority Having Jurisdiction (AHJ).

This NOA shall not be valid after the expiration date stated below. The Miami-Dade County Product Control Division (In Miami Dade County) and/or the AHJ (in areas other than Miami Dade County) reserve the right to have this product or material tested for quality assurance purposes. If this product or material fails to perform in the accepted manner, the manufacturer will incur the expense of such testing and the AHJ may immediately revoke, modify, or suspend the use of such product or material within their jurisdiction. BORA reserves the right to revoke this acceptance, if it is determined by Miami-Dade County Product Control Division that this product or material fails to meet the requirements of the applicable building code.

This product is approved as described herein, and has been designed to comply with the High Velocity Hurricane Zone of the Florida Building Code.

DESCRIPTION: 0.050" Aluminum Storm Panels Shutter

APPROVAL DOCUMENT: Drawing No. 10-103, titled " 0.050" Aluminum Storm Panel ", sheets 1 through 5 of 5, prepared by Knezevich Associates Consulting Engineers, dated February 04, 2010, signed and sealed by V. J. Knezevich, P.E., on February 04, 2010, bearing the Miami-Dade County Product Control Revision stamp with the Notice of Acceptance number and the expiration date by the Miami-Dade County Product Control Division.

MISSILE IMPACT RATING: Large and Small Missile Impact

LABELING: Each panel shall bear a permanent label with the manufacturer's name or logo, city, state and the following statement: "Miami-Dade County Product Control Approved", unless otherwise noted herein.

RENEWAL of this NOA shall be considered after a renewal application has been filed and there has been no change in the applicable building code negatively affecting the performance of this product.

TERMINATION of this NOA will occur after the expiration date or if there has been a revision or change in the materials, use, and/or manufacture of the product or process. Misuse of this NOA as an endorsement of any product, for sales, advertising or any other purposes shall automatically terminate this NOA. Failure to comply with any section of this NOA shall be cause for termination and removal of NOA.

ADVERTISEMENT: The NOA number preceded by the words Miami-Dade County, Florida, and followed by the expiration date may be displayed in advertising literature. If any portion of the NOA is displayed, then it shall be done in its entirety.

INSPECTION: A copy of this entire NOA shall be provided to the user by the manufacturer or its distributors and shall be available for inspection at the job site at the request of the Building Official.

This NOA **revises & renews NOA # 05-1006.04** and consists of this page 1, evidence submitted pages E-1 & E-2 as well as approval document mentioned above.

The submitted documentation was reviewed by **Helmy A. Makar, P.E., M.S.**

MIAMI-DADE COUNTY APPROVED

Helmy A. Makar
03/24/2010

NOA No. 10-0222.03
Expiration Date: 03/31/2015
Approval Date: 03/24/2010

J M Steel Corporation

NOTICE OF ACCEPTANCE: EVIDENCE SUBMITTED

1. EVIDENCE SUBMITTED UNDER PREVIOUS APPROVAL # 04-1221.04

A. DRAWINGS

1. *Drawing No. 04-323, titled " 0.050" Aluminum Storm Panel ", sheets 1 through 5 of 5, prepared by Thornton-Tomasetti Group, dated December 16, 2004, last revision #1 dated March 02, 2005, signed and sealed by V. J. Knezevich, P.E.*

B. TESTS

1. *Test report on Uniform Static Air Pressure Test, Large Missile Impact Test, and Cyclic Wind Pressure Test of 0.050" Aluminum Storm Panels Shutter, prepared by Construction Testing Corporation, Report No. 04-016 FBC, dated October 31, 2004, signed and sealed by Yamil G. Kuri, P.E.*

C. CALCULATIONS

1. *0.050" Aluminum Storm Panels Calculations, Sheets 1 through 58 of 58, by The Thornton-Tomasetti Group, Inc. dated December 16, 2004, signed and sealed by V. J. Knezevich, P.E.*

D. QUALITY ASSURANCE

1. *By Miami-Dade County Building Code Compliance Office.*

E. MATERIAL CERTIFICATIONS

1. *Tensile Test Report from Certified Testing Laboratories, Job No. CTL-1191 dated October 26, 2004 for 0.050" Aluminum Storm Panel, tested per ASTM E8-93, signed and sealed by Ramesh Patel, P.E.*

2. EVIDENCE SUBMITTED UNDER PREVIOUS APPROVAL # 05-1006.04

A. DRAWINGS

1. *Drawing No. 06-323, titled " 0.050" Aluminum Storm Panel ", sheets 1 through 5 of 5, prepared by Thornton-Tomasetti Group, dated March 13, 2006, last revision #0 dated March 13, 2006, signed and sealed by V. J. Knezevich, P.E.*

B. TESTS

1. *None.*

C. CALCULATIONS

1. *0.050" Aluminum Storm Panels Calculations, Sheets 1 through 4 of 4, by The Thornton-Tomasetti Group, Inc. dated September 16, 2005, signed and sealed by V. J. Knezevich, P.E.*

Helmy A. Makar, P.E., M.S.
Senior Product Control Examiner
NOA No. 10-0222.03
Expiration Date: 03/31/2015
Approval Date: 03/24/2010

D. QUALITY ASSURANCE

1. By Miami-Dade County Building Code Compliance Office.

E. MATERIAL CERTIFICATIONS

1. None.

3. NEW EVIDENCE SUBMITTED

A. DRAWINGS

1. Drawing No. 10-103, titled " 0.050" Aluminum Storm Panel ", sheets 1 through 5 of 5, prepared by Knezevich Associates Consulting Engineers, dated February 04, 2010, signed and sealed by V. J. Knezevich, P.E., on February 04, 2010.

B. TESTS

1. None.

C. CALCULATIONS

1. None.

D. QUALITY ASSURANCE

1. By Miami-Dade County Building Code Compliance Office.

E. MATERIAL CERTIFICATIONS

1. None.

Helmy A. Makar, P.E., M.S.
Senior Product Control Examiner
NOA No. 10-0222.03
Expiration Date: 03/31/2015
Approval Date: 03/24/2010

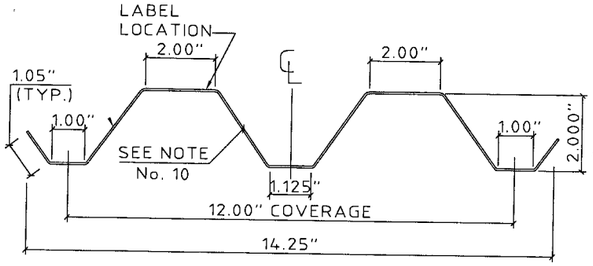

1 STORM PANEL
SCALE : 3" = 1'-0"

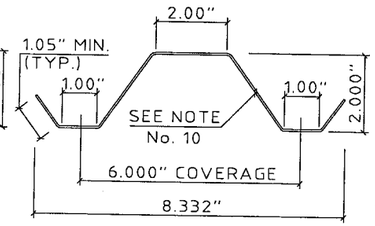

1a HALF STORM PANEL
SCALE : 3" = 1'-0"

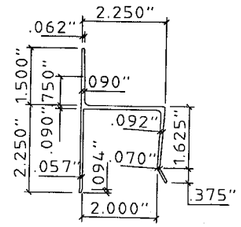

2 "h" HEADER
SCALE : 3" = 1'-0"

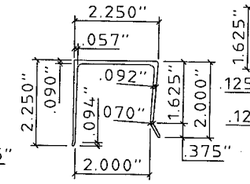

3 "U" HEADER
SCALE : 3" = 1'-0"

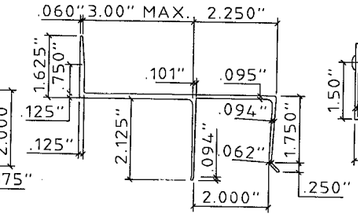

3a BUILD-OUT "U" HEADER

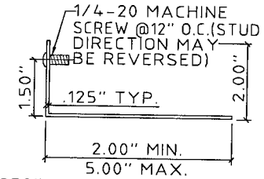

4 STUD ANGLE
SCALE : 3" = 1'-0"

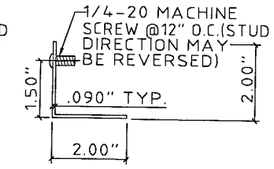

5 STUD ANGLE
SCALE : 3" = 1'-0"

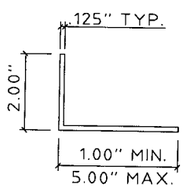

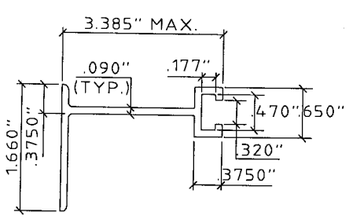

6 ANGLE
SCALE : 3" = 1'-0"

7 BUILD-OUT F-TRACK
SCALE : HALF SIZE

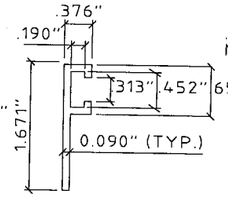

8 "F" TRACK
SCALE : HALF SIZE

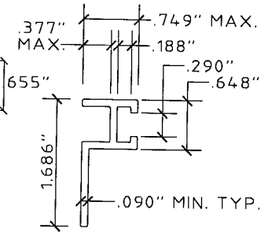

8a BF-TRACK
SCALE : HALF SIZE

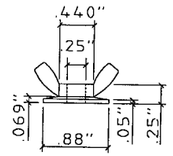

(ZAMAC 3 ALLOY)
9 WING NUT
SCALE : HALF SIZE

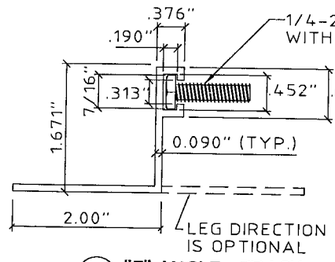

10 "F" ANGLE - TRACK
SCALE : HALF SIZE

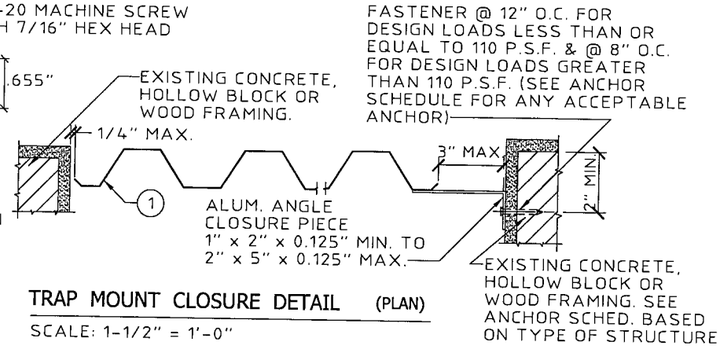

TRAP MOUNT CLOSURE DETAIL (PLAN)
SCALE: 1-1/2" = 1'-0"

GENERAL NOTES:

1. THESE APPROVAL DOCUMENTS REPRESENT A SHUTTER SYSTEM ANALYZED WITH THE PROVISION SET FOR THE ISSUANCE OF A NOTICE OF ACCEPTANCE (NOA) BY MIAMI-DADE COUNTY PRODUCT CONTROL DIVISION FOR THE HIGH VELOCITY HURRICANE ZONE (HVHZ) OF THE FLORIDA BUILDING CODE 2007 WITH 2009 SUPPLEMENT.
2. NO INCREASE IN ALLOWABLE STRESS HAS BEEN USED IN THE DESIGN OF THIS PRODUCT. WIND LOAD DURATION FACTOR Cd = 1.6 WAS USED FOR WOOD SCREW DESIGN.
3. DETERMINE THE POSITIVE AND NEGATIVE DESIGN LOADS TO USE WHEN REFERENCING THESE DOCUMENTS IN ACCORDANCE WITH THE GOVERNING CODE AND GOVERNING WIND VELOCITY.
4. THESE APPROVAL DOCUMENTS ARE GENERIC AND DO NOT INCLUDE INFORMATION FOR SITE-SPECIFIC APPLICATION OF THIS SHUTTER SYSTEM.
5. USE OF THESE APPROVAL DOCUMENTS SHALL COMPLY WITH CHAPTER 61G15-23 OF THE FLORIDA ADMINISTRATIVE CODE.
6. THESE APPROVAL DOCUMENTS, ARE SUITABLE TO BE APPLIED BY THE CONTRACTOR PROVIDED THE CONTRACTOR DOES NOT DEVIATE FROM THE CONDITIONS DETAILED HEREIN AND THE CONTRACTOR VERIFIES THAT THE EXISTING STRUCTURE DOES NOT DEVIATE IN EITHER FORM OR MATERIAL FROM THE STRUCTURAL SUBSTRATES DETAILED HEREIN.
7. ANY MODIFICATIONS OR ADDITIONS TO THESE APPROVAL DOCUMENTS WILL VOID THE APPROVAL DOCUMENTS.
8. WHEN THE SITE CONDITIONS DEVIATE FROM THESE APPROVAL DOCUMENTS, THE BUILDING OFFICIAL MAY ELECT ONE OF THE FOLLOWING OPTIONS:
   A) REQUIRE THAT SITE SPECIFIC DOCUMENTS BE PREPARED, SIGNED, DATED AND SEALED BY A LICENSED ENGINEER OR REGISTERED ARCHITECT, WHICH DETAIL AND JUSTIFY THE DEVIATION. SAID DOCUMENTS SHALL BE SUBMITTED TO THE PRODUCT ENGINEER FOR REVIEW AS A CONDITION TO THE BUILDING OFFICIAL GRANTING HIS/HER APPROVAL.
   B) REQUIRE THAT A ONE-TIME SITE SPECIFIC APPROVAL BE APPLIED FOR AND SECURED FROM THE MIAMI-DADE COUNTY PRODUCT CONTROL DIVISION.

   WHEN THE SITE CONDITION DEVIATIONS OCCUR WITHIN THE HIGH VELOCITY HURRICANE ZONE AREAS ONLY OPTION "B" SHALL BE ACCEPTED BY THE BUILDING OFFICIAL.
9. PRODUCT MARKINGS SHALL BE PLACED ON OUTSIDE OF STORM PANEL WITH AT LEAST ONE MARKING EVERY 3 FEET AND SHALL BE PERMANENTLY LABELED AS FOLLOWS:

   JM STEEL CORPORATION
   HUGER, SOUTH CAROLINA
   TAS 201, 202 & 203
   MIAMI-DADE NOA NUMBER
10. STORM PANELS SHALL BE 3004-H34 ALUMINUM ALLOY, WITH THE FOLLOWING MIN. THICKNESS AND MECHANICAL PROPERTIES: NOMINAL 0.050" MIN Fy = 25.0 K.S.I.
11. ALL EXTRUSIONS SHALL BE 6063-T6 ALUMINUM ALLOY, U.O.N.
12. ALL BOLTS AND WASHERS SHALL BE GALVANIZED OR STAINLESS STEEL WITH A MINIMUM TENSILE STRENGTH OF 60 K.S.I., U.O.N.
13. TOP & BOTTOM DETAILS SHOWN MAY BE INTERCHANGED AS FIELD CONDITIONS DICTATE. PANELS MAY BE MOUNTED HORIZONTALLY WHERE APPLICABLE, EXCEPT FOR "h" AND "U" HEADER MOUNTING CONDITIONS.

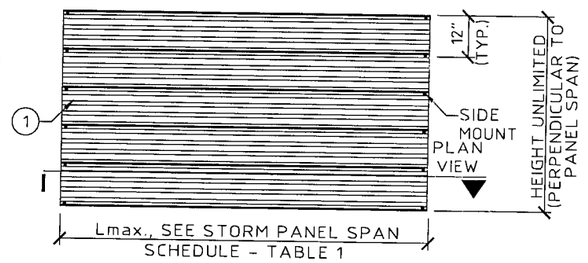

TYPICAL HORIZONTAL ELEVATION
SCALE: 1/4" = 1' - 0"

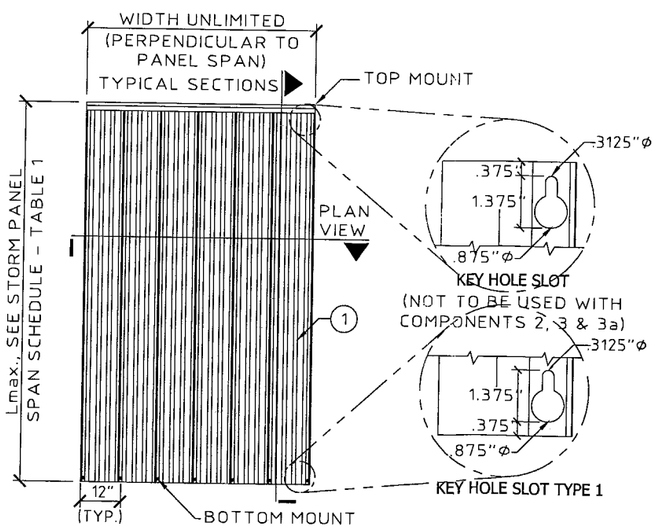

TYPICAL VERTICAL ELEVATION
SCALE: 1/4" = 1' - 0"

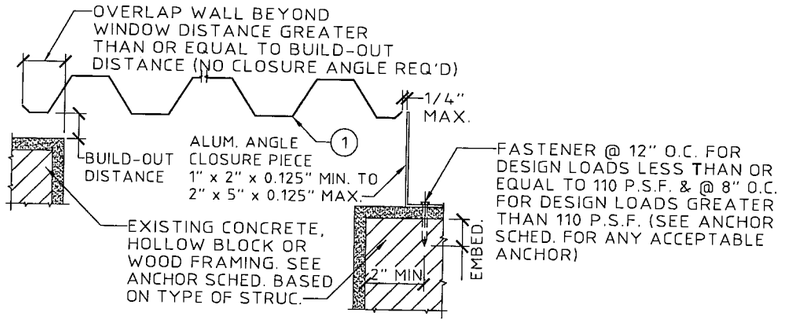

BUILD-OUT MOUNT CLOSURE DETAIL (PLAN)
SCALE: 1-1/2" = 1'-0"

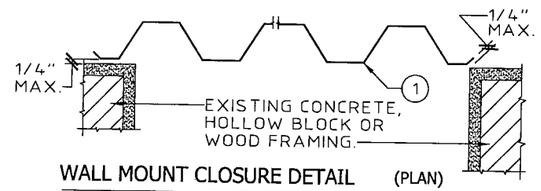

WALL MOUNT CLOSURE DETAIL (PLAN)
SCALE: 1-1/2" = 1'-0"

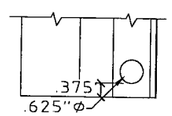

HOLE TYPE 2
(MAY BE USED WITH ANY COMPONENT)

PRODUCT REVISED
as complying with the Florida Building Code
Acceptance No 10-0222.03
Expiration Date 03/31/2015
By Helena A. Melo
Miami Dade Product Control Division

KNEZEVICH ASSOCIATES
Consulting Engineers
2590 S.W. 105th Terrace * Davie, Florida 33324
T (954) 821-6933 * F (954) 452-7960 * COA 27989
email: VJK@Knezevich.com

Copyright © 2010 VJKnezevich & Associates, LLC d/b/a Knezevich Associates

0.050" ALUMINUM STORM PANEL

JM Steel Corporation
1050 North Steel Circle
Huger, SC 29450
(770) 231-1335
(412) 963-9071

Jenmar Corporation

revisions			
no	date	by	description

V.J. Knezevich
Professional Engineer
FL License No.: PE 0010983

FEB 04 2010

drawn by	scale
VJK	AS NOTED
date	02/04/2010

drawing no.
10-103

sheet 1 of 5

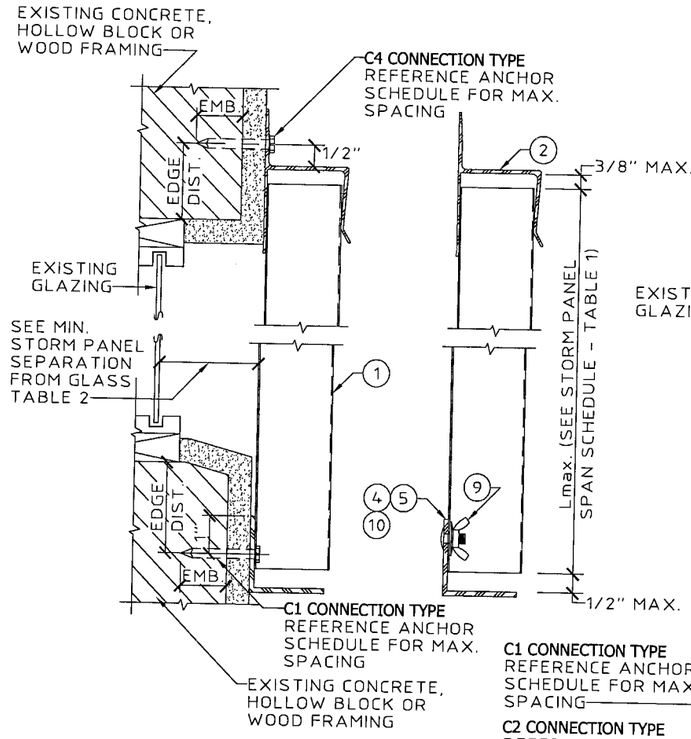

A WALL MOUNT SECTION
SCALE: 3" = 1' - 0"

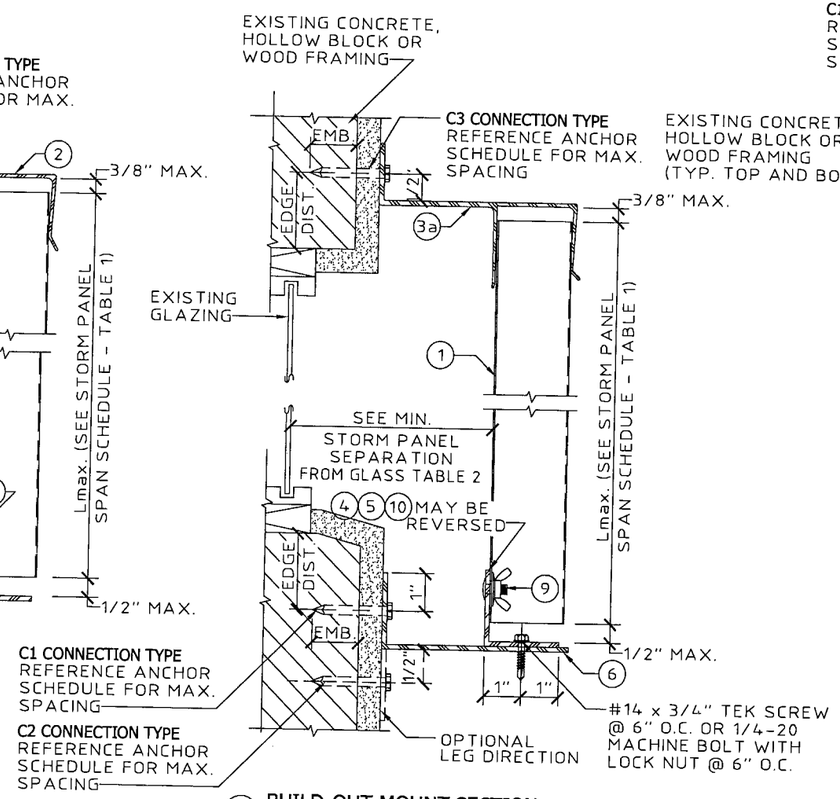

B BUILD-OUT MOUNT SECTION
SCALE: 3" = 1' - 0"

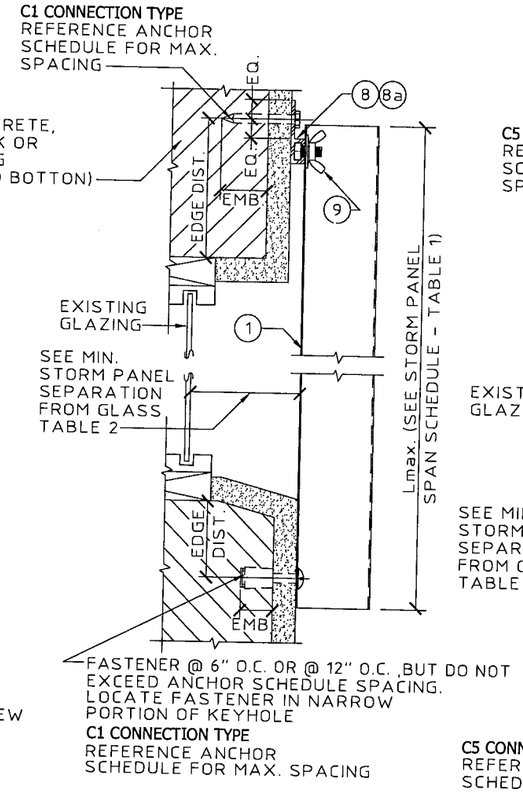

C "F" TRACK/DIRECT MOUNT SECTION
SCALE: 3" = 1' - 0"

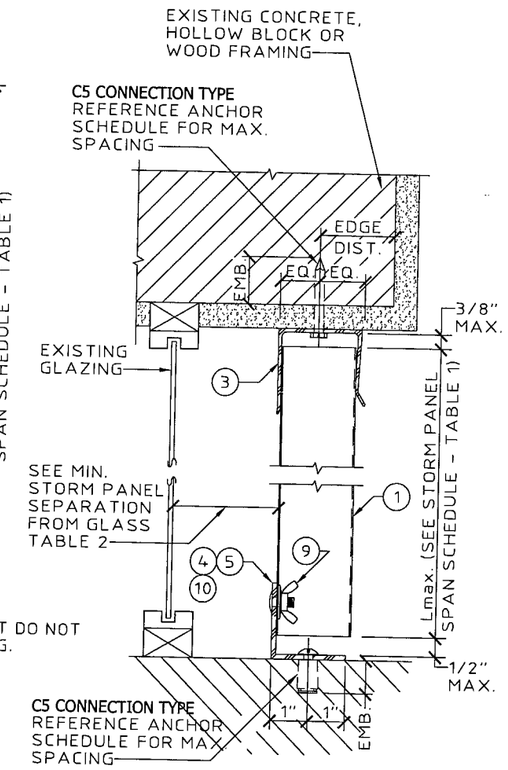

D CEILING/FLOOR MOUNT SECTION
SCALE: 3" = 1' - 0"

DETAIL (E) ("PASS THRU" SEC.) ANCHOR SCHEDULE

FASTENER TYPE	CONC.	BLOCK	WOOD
1/4"Ø ITW TAPCON WITH 1-3/4" MIN. EMBEDMENT AND 2-1/2" MINIMUM EDGE DISTANCE	12"	4"	N/A
1/4"Ø ELCO ULTRACON W/ 1-1/2" MIN. EMBED. IN CONC. OR 1-1/4" EMBED. IN BLOCK AND 2" MIN. EDGE DISTANCE	7"	4"	N/A
1/4"Ø ITW MAXI SET TAPCON WITH 1-1/4" MIN. EMBEDMENT AND 2" MINIMUM EDGE DISTANCE	5"	3"	N/A
1/4"Øx MIN. 2-1/2" LONG WOOD LAG SCREW WITH MIN. 1-3/4" EMBED. SHEAR PARALLEL OR PERP. TO WOOD GRAIN	N/A	N/A	12"

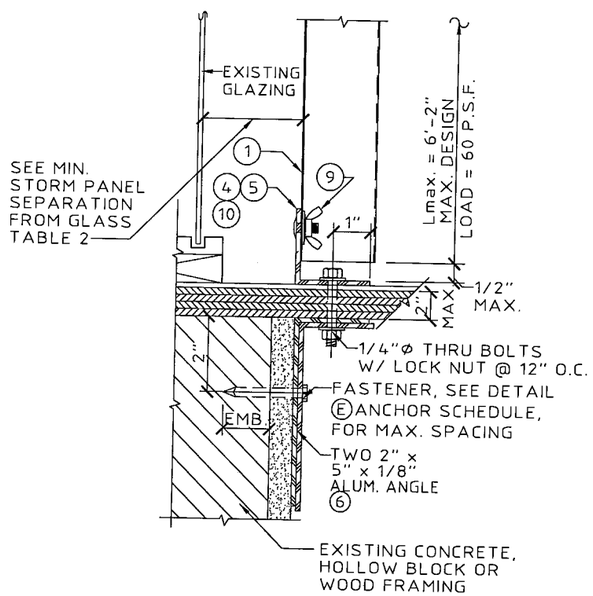

E "PASS THRU" SECTION
SCALE: 3" = 1' - 0"

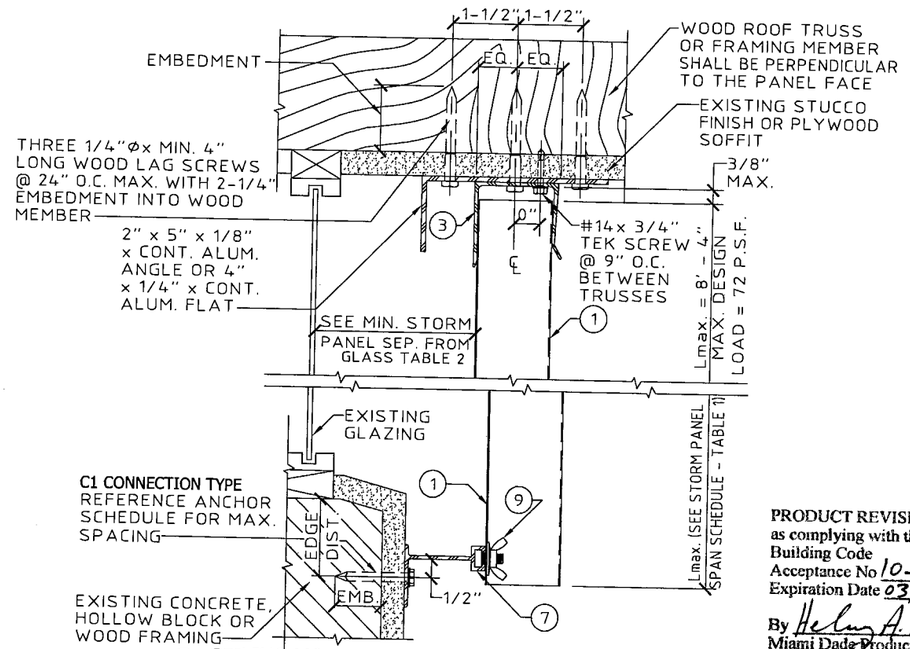

F CEILING MOUNT / BUILD OUT SECTION
SCALE: 3" = 1' - 0"

PRODUCT REVISED
as complying with the Florida Building Code
Acceptance No 10-0222.03
Expiration Date 03/31/2015
By Helen A. Melo
Miami Dade Product Control Division

KNEZEVICH ASSOCIATES
Consulting Engineers
2590 S.W. 105th Terrace * Davie, Florida 33324
T (954) 821-6933 * F (954) 452-7960 * COA 27989
email: VJK@Knezevich.com

Copyright © 2010 VJKnezevich & Associates, LLC d/b/a Knezevich Associates

0.050" ALUMINUM STORM PANEL

JM Steel Corporation
1050 North Steel Circle
Huger, SC 29450
(770) 231-1335
(412) 963-9071

Jenmar Corporation

revisions

no	date	by	description

V.J. Knezevich
Professional Engineer
FL License No. PE 0010983

FEB 04 2010

drawn by VJK
scale AS NOTED
date 02/04/2010
drawing no. 10-103
sheet 2 of 5

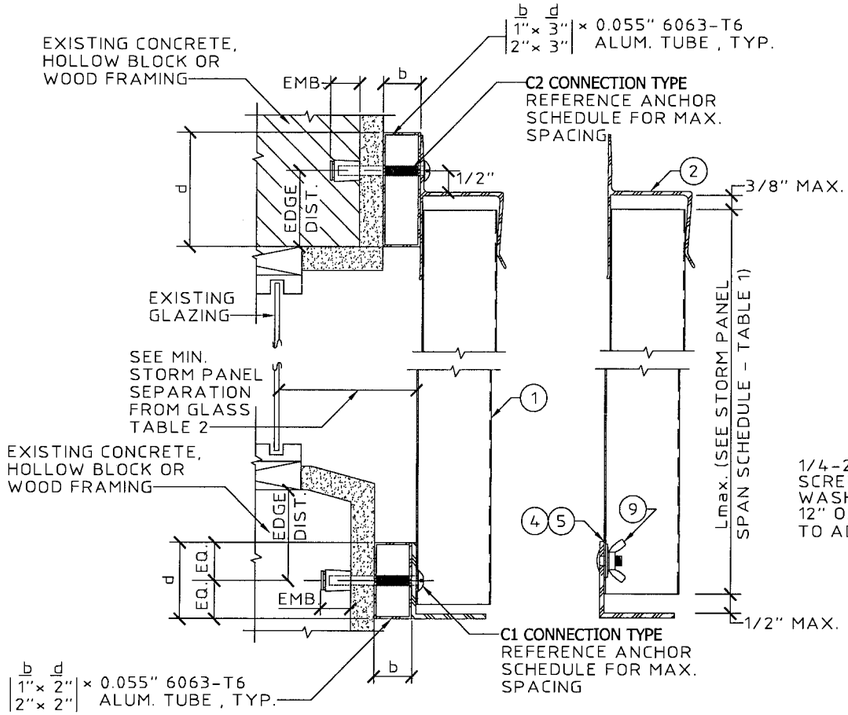

G WALL MOUNT SECTION
SCALE: 3" = 1' - 0"

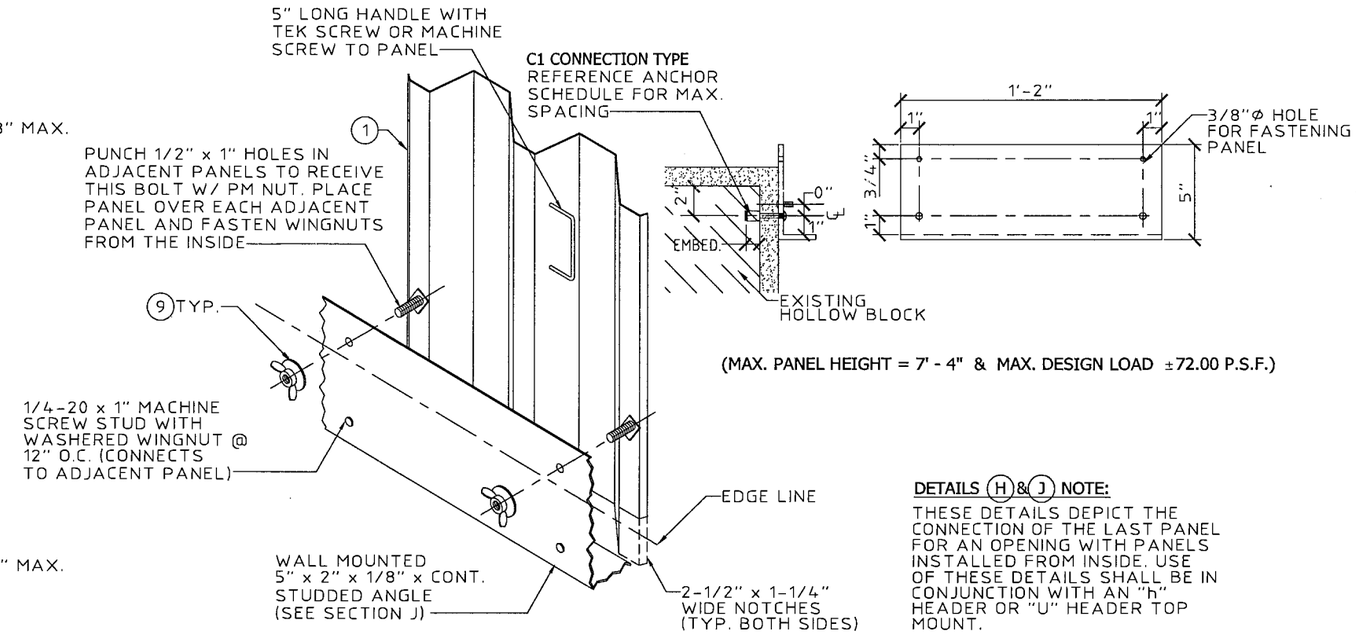

(MAX. PANEL HEIGHT = 7' - 4" & MAX. DESIGN LOAD ±72.00 P.S.F.)

H OPTIONAL INTERIOR FASTENING DETAIL (ISOMETRIC)
N.T.S.

DETAILS (H) & (J) NOTE:

THESE DETAILS DEPICT THE CONNECTION OF THE LAST PANEL FOR AN OPENING WITH PANELS INSTALLED FROM INSIDE. USE OF THESE DETAILS SHALL BE IN CONJUNCTION WITH AN "h" HEADER OR "U" HEADER TOP MOUNT.

J INTERIOR FASTENING ANGLE ASSEMBLY
SCALE: 1-1/2" = 1'-0"

PRODUCT REVISED
as complying with the Florida Building Code
Acceptance No 10-0222.03
Expiration Date 03/31/2015
By Helena A. Melo
Miami Dade Product Control Division

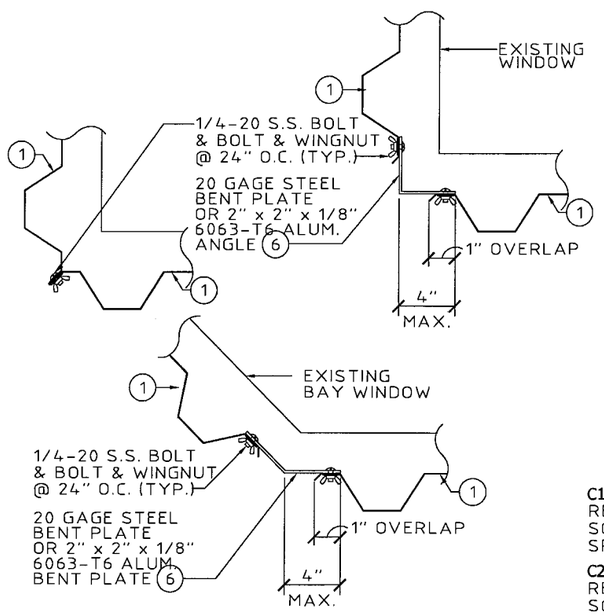

K TYPICAL CORNER CLOSURE DETAILS (PLAN)
SCALE: 1-1/2" = 1'-0"

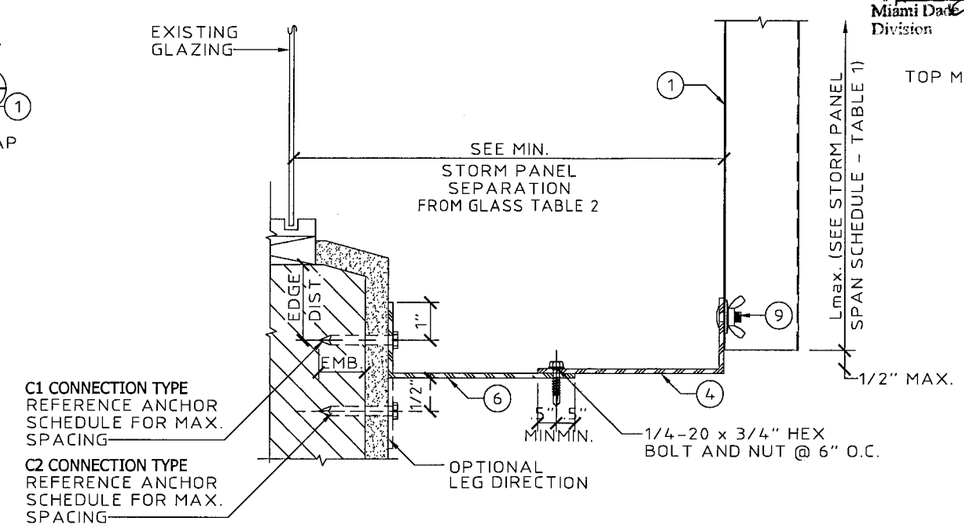

L 9" MAX. BUILD-OUT MOUNT SECTION
SCALE: 3" = 1' - 0"

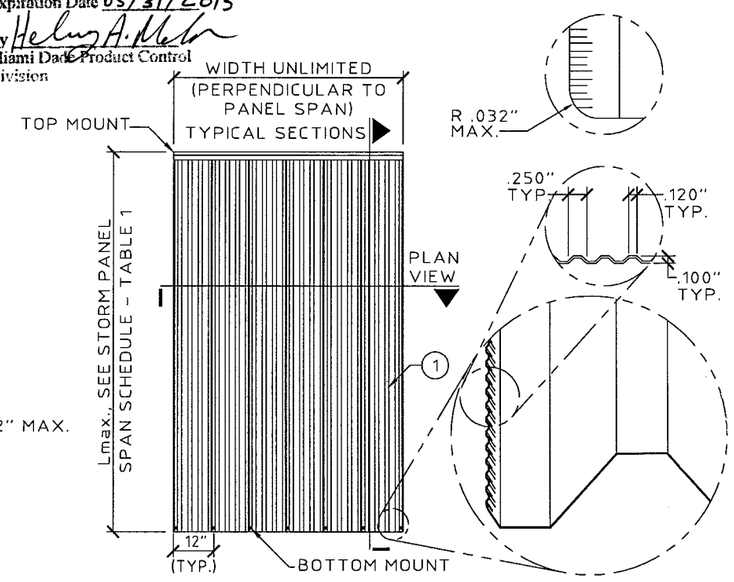

TYPICAL VERTICAL ELEVATION
SCALE: 1/4" = 1' - 0"

KNEZEVICH ASSOCIATES
Consulting Engineers
2590 S.W. 105th Terrace * Davie, Florida 33324
T (954) 821-6933 * F (954) 432-7960 * COA 27989
email: VJK@Knezevich.com

Copyright © 2010 VJKnezevich & Associates, LLC d/b/a Knezevich Associates

0.050" ALUMINUM STORM PANEL

JM Jenmar Corporation USA
JM Steel Corporation
1050 North Steel Circle
Huger, SC 29450
(770) 231-1335
(412) 963-9071

revisions			
no	date	by	description

V.J. Knezevich
Professional Engineer
FL License No. PE0010983

FEB 04 2010

drawing by VJK
scale AS NOTED
date 02/04/2010
drawing no. 10-103
sheet 3 of 5

ANCHOR SCHEDULE

FASTENER MAXIMUM SPACING (INCHES) REQUIRED FOR VARIOUS DESIGN LOADS AND SPANS

EXIST. STRUC.	ANCHOR TYPE	LOAD (W) P.S.F. MAX. (SEE NOTE 1)	MIN. 2" EDGE DISTANCE															MIN. 3" EDGE DISTANCE													
			SPANS UP TO 6'-0" (SEE NOTE 1)					SPANS UP TO 8'-8" (SEE NOTE 1)					SPANS UP TO 12'-0" (SEE NOTE 1)					SPANS UP TO 6'-0" (SEE NOTE 1)					SPANS UP TO 8'-8" (SEE NOTE 1)					SPANS UP TO 12'-0" (SEE NOTE 1)				
			CONNECTION TYPE (SEE NOTE 3)					CONNECTION TYPE (SEE NOTE 3)					CONNECTION TYPE (SEE NOTE 3)					CONNECTION TYPE (SEE NOTE 3)					CONNECTION TYPE (SEE NOTE 3)					CONNECTION TYPE (SEE NOTE 3)				
			C1	C2	C3	C4	C5	C1	C2	C3	C4	C5	C1	C2	C3	C4	C5	C1	C2	C3	C4	C5	C1	C2	C3	C4	C5	C1	C2	C3	C4	C5
CONCRETE	1/4"Ø ITW BUILDEX TAPCON W/ 1-3/4" MIN. EMBEDMENT (MIN. 3,192 P.S.I. CONCRETE)	51.0																16	16	16	16	15	16	16	16	12	10	16	16	15	6	7
		64.0																16	16	16	16	11	16	16	16	7	8	16	9	7	4	5
		72.0																16	16	16	12	10	16	16	13	6	7	16	8	6	4	5
		84.0																16	16	16	9	9	16	10	8	4	6	16	8	6	4	5
		150.0																16	8	6	4	5	16	8	6	4	5	16	8	6	4	5
	* 1/4"Ø ELCO MALE/ FEMALE "PANELMATE" W/ 1-3/4 MIN. EMBEDMENT & 1/4-20 MACHINE SCREW WITH NUT (MIN. 3,000 P.S.I. CONCRETE)	51.0	12	12	12	12	11	12	12	12	9	8	12	12	11	4	5	12	12	12	12	12	12	12	12	11	10	12	12	12	5	7
		64.0	12	12	12	12	9	12	12	12	5	6	12	7	5	3	4	12	12	12	12	11	12	12	12	7	8	12	8	6	4	5
		72.0	12	12	12	9	8	12	12	10	4	5	12	6	5	3	4	12	12	12	12	10	12	12	12	5	7	12	8	6	4	5
		84.0	12	12	12	6	7	12	8	6	3	5	12	6	5	3	4	12	12	12	8	9	12	10	7	4	6	12	8	6	4	5
		150.0	12	6	5	3	4	12	6	5	3	4	12	6	5	3	4	12	8	6	4	5	12	8	6	4	5	12	8	6	4	5
	* 1/4"Ø ALL-POINTS SOLID-SET ANCHOR WITH 7/8" EMBED. & 1/4-20 STAINLESS STEEL MACHINE SCREW (MIN. 3,000 P.S.I. CONCRETE)	51.0	16	16	16	16	10	16	16	16	6	7	11	10	7	3	5	16	16	16	16	12	16	16	16	7	8	14	13	9	4	6
		64.0	16	16	16	8	8	12	12	12	3	5	9	4	3		4	16	16	16	11	10	16	16	16	4	6	11	5	4		5
		72.0	16	16	16	6	7	11	9	7	3	4	9	4	3		3	16	16	16	8	8	14	12	8	3	6	11	5	4		4
		84.0	14	14	14	4	6	9	5	4		4	9	4	3		3	16	16	16	5	7	12	6	5	3	5	11	5	4		4
		150.0	9	4	3		3	9	4	3		3	9	4	3		3	11	5	4		4	11	5	4		4	11	5	4		4
	1/4"Ø ELCO ULTRACON W/ 1-1/2" MIN. EMBED. (MIN. 3,000 P.S.I. CONCRETE)	51.0	16	16	16	16	8	12	12	12	4	5	8	8	5		4	16	16	16	16	10	15	15	15	5	6	11	10	7	3	5
		64.0	14	14	14	6	6	9	9	9		4	7	3			3	16	16	16	8	8	12	12	12	3	5	8	4	3		4
		72.0	12	12	12	5	5	8	7	5		3	6	3			3	15	15	15	6	7	10	9	6	3	4	8	4	3		3
		84.0	10	10	10	3	4	7	4	3		3	6	3			3	13	13	13	4	6	9	5	4		4	8	4	3		3
		150.0	6	3			3	6	3			3	6	3			3	8	4	3		3	8	4	3		3	8	4	3		3
	1/4"Ø ITW MAXI SET TAPCON WITH 1-1/4" MIN. EMBEDMENT (MIN. 3,000 P.S.I. CONCRETE)	51.0	16	16	16	16	13	16	16	16	8	9	16	15	11	4	6	16	16	16	16	13	16	16	16	8	9	16	15	11	4	6
		64.0	16	16	16	12	10	16	16	16	5	7	13	6	5	3	5	16	16	16	12	10	16	16	16	5	7	13	6	5	3	5
		72.0	16	16	16	9	9	16	13	10	4	6	13	6	5	3	5	16	16	16	9	9	16	13	10	4	6	13	6	5	3	5
		84.0	16	16	16	6	8	14	8	6	3	5	13	6	5	3	5	16	16	16	6	8	14	8	6	3	5	13	6	5	3	5
		150.0	13	6	5	3	5	13	6	5	3	5	13	6	5	3	5	13	6	5	3	5	13	6	5	3	5	13	6	5	3	5
HOLLOW CONCRETE BLOCK	1/4"Ø ITW BUILDEX TAPCON W/ 1-1/4" MIN. EMBEDMENT	51.0																15	15	15	14	6	10	10	10	4	4	7	6	5		3
		64.0																12	12	12	5	5	8	8	8		3	6	3			
		72.0																10	10	10	4	4	7	6	4		3	5				
		84.0																9	9	9	3	4	6	3				5				
		150.0																5					5					5				
	* 1/4"Ø ELCO MALE/ FEMALE "PANELMATE" W/ 1-1/4 MIN. EMBEDMENT & 1/4-20 MACHINE SCREW WITH NUT	51.0	12	12	12	12	7	12	12	12	5	4	9	9	6		3	12	12	12	12	8	12	12	12	5	5	10	9	6		4
		64.0	12	12	12	7	5	10	10	10	3	3	7	4	3			12	12	12	7	6	11	11	11	3	4	8	4	3		3
		72.0	12	12	12	5	5	9	8	6		3	7	3	3			12	12	12	5	5	10	8	6		3	8	4	3		3
		84.0	12	12	12	3	4	8	4	3		3	7	3	3			12	12	12	4	4	8	4	3		3	8	4	3		3
		150.0	7	3	3			7	3	3			7	3	3			8	4	3		3	8	4	3		3	8	4	3		3
	* 1/4"Ø ALL-POINTS SOLID-SET ANCHOR WITH 7/8" EMBED. & 1/4-20 STAINLESS STEEL MACHINE SCREW	51.0	13	13	13	13	6	9	9	9	3	4	6	6	4		3	16	16	16	16	8	11	11	11	4	5	8	7	5		4
		64.0	10	10	10	5	5	7	7	7		3	5					13	13	13	6	6	9	9	9		4	6	3			3
		72.0	9	9	9	3	4	6	5	4		3	5					12	12	12	4	5	8	7	5		4	6	3			3
		84.0	8	8	8		4	5	3				5					10	10	10	3	5	7	4	3		3	6	3			3
		150.0	5					5					5					6	3			3	6	3			3	6	3			3
	1/4"Ø ELCO ULTRACON W/ 1-1/2" MIN. EMBED.	51.0	9	9	9	9	4	6	6	6		3	4	4	3			12	12	12	11	5	8	8	8	3	4	6	5	4		
		64.0	7	7	7	3	3	5	5	5			3					9	9	9	4	4	6	6	6		3	4				
		72.0	6	6	6		3	4	4				3					8	8	8	3	4	5	5	3			4				
		84.0	5	5	5			4					3					7	7	7		3	5					4				
		150.0	3					3					3					4					4					4				
	1/4"Ø ITW MAXI SET TAPCON WITH 1-1/4" MIN. EMBEDMENT	51.0	16	16	16	16	9	16	16	16	7	6	14	12	9	3	4	16	16	16	16	9	16	16	16	7	6	14	12	9	3	4
		64.0	16	16	16	10	7	15	15	15	4	5	11	5	4		3	16	16	16	10	7	15	15	15	4	5	11	5	4		3
		72.0	16	16	16	7	6	13	11	8	3	4	10	5	4		3	16	16	16	7	6	13	11	8	3	4	10	5	4		3
		84.0	16	16	16	5	5	11	6	5		4	10	5	4		3	16	16	16	5	5	11	6	5		4	10	5	4		3
		150.0	10	5	4		3	10	5	4		3	10	5	4		3	10	5	4		3	10	5	4		3	10	5	4		3

ANCHOR SCHEDULE

FASTENER MAXIMUM SPACING (INCHES) REQUIRED FOR VARIOUS DESIGN LOADS AND SPANS

EXIST. STRUC.	ANCHOR TYPE	LOAD (W) P.S.F. MAX. (SEE NOTE 1)	MIN. 3/4" EDGE DISTANCE														
			SPANS UP TO 6'-0" (SEE NOTE 1)					SPANS UP TO 8'-8" (SEE NOTE 1)					SPANS UP TO 12'-0" (SEE NOTE 1)				
			CONNECTION TYPE (SEE NOTE 3)					CONNECTION TYPE (SEE NOTE 3)					CONNECTION TYPE (SEE NOTE 3)				
			C1	C2	C3	C4	C5	C1	C2	C3	C4	C5	C1	C2	C3	C4	C5
WOOD	1/4"Ø x MIN. 3" LONG LAG SCREW W/ MIN. 1-27/32" THREADED PENETRATION PARALLEL OR PERPENDICULAR TO WOOD GRAIN	51.0	16	16	16	16	12	16	16	16	16	8	16	16	16	8	6
		64.0	16	16	16	16	10	16	16	16	10	6	16	12	9	5	5
		72.0	16	16	16	16	8	16	16	16	8	6	16	11	9	5	4
		84.0	16	16	16	12	7	16	14	11	6	5	16	11	9	5	4
		150.0	16	11	9	5	4	16	11	9	5	4	16	11	9	5	4
	* 1/4"Ø ELCO MALE/ FEMALE "PANELMATE" W/ 1-7/8" MIN. EMBEDMENT & 1/4-20 MACHINE SCREW WITH NUT	51.0	12	12	12	12		11	11	11	4		7	7	5		
		64.0	12	12	12	6		8	8	8			6	3			
		72.0	11	11	11	4		7	6	4			6	3			
		84.0	9	9	9	3		6	3				6	3			
		150.0	6	3				6	3				6	3			
	* 7/16"Ø WOOD BUSHING W/ 7/8" MIN. EMBEDMENT & 1/4-20 STAINLESS STEEL MACHINE SCREW ANCHOR INSTALLED IN SPRUCE PINE FIR LUMBER MIN. DENSITY, G= 0.42	51.0	12	12	12	12	9	12	12	12	6	6	12	11	8	3	4
		64.0	12	12	12	9	7	12	12	12	4	5	10	5	4		3
		72.0	12	12	12	7	6	12	10	7	3	4	10	5	3		3
		84.0	12	12	12	5	5	10	6	4		4	10	5	3		3
		150.0	10	5	3		3	10	5	3		3	10	5	3		3

ANCHOR NOTES:

1. SPANS AND LOADS SHOWN HERE ARE FOR DETERMINING ANCHOR SPACING ONLY. ALLOWABLE STORM PANEL SPANS FOR SPECIFIC LOADS MUST BE LIMITED TO THOSE SHOWN IN TABLE 1.
2. ENTER ANCHOR SCHEDULE BASED ON THE EXISTING STRUCTURE MATERIAL, ANCHOR TYPE AND EDGE DISTANCE. SELECT DESIGN LOAD GREATER THAN OR EQUAL TO NEGATIVE DESIGN LOAD ON SHUTTER AND SELECT SPAN GREATER THAN OR EQUAL TO SHUTTER SPAN.
3. SEE MOUNTING SECTION DETAILS FOR IDENTIFICATION OF CONNECTION TYPE.
4. EXISTING STRUCTURE MAY BE CONCRETE, HOLLOW BLOCK OR WOOD FRAMING. REFERENCE ANCHOR SCHEDULE FOR PROPER ANCHOR TYPE BASED ON TYPE OF EXISTING STRUCTURE.
5. ANCHORS SHALL BE INSTALLED IN ACCORDANCE WITH MANUFACTURERS' RECOMMENDATIONS.
6. MINIMUM EMBEDMENT AND EDGE DISTANCE EXCLUDES WALL FINISH OR STUCCO.
7. WHERE EXISTING STRUCTURE IS WOOD FRAMING, WOOD FRAMING CONDITIONS VARY. FIELD VERIFY THAT FASTENERS ARE INTO ADEQUATE WOOD FRAMING MEMBERS, NOT PLYWOOD. FASTENING TO PLYWOOD IS ACCEPTABLE ONLY FOR SIDE CLOSURE PIECES.
8. WHERE LAG SCREWS FASTEN TO NARROW FACE OF STUD FRAMING, FASTENER SHALL BE LOCATED IN CENTER OF NOMINAL 2" x 4" (MIN.) WOOD STUD. 3/4" EDGE DISTANCE IS ACCEPTABLE FOR WOOD FRAMING. WOOD STUD SHALL BE "SOUTHERN PINE" G=0.55 OR GREATER DENSITY. LAG SCREWS SHALL HAVE PHILLIPS PAN HEAD OR HEX HEAD.
9. MACHINE SCREWS SHALL HAVE MINIMUM OF 1/2" ENGAGEMENT OF THREADS IN BASE ANCHOR AND MAY HAVE A WAFER HEAD (SIDEWALK BOLT), U.O.N.
10. DESIGNATES ANCHOR CONDITIONS WHICH ARE NOT ACCEPTABLE USES.
11. * DESIGNATES ANCHORS WHICH ARE REMOVABLE BY REMOVING MACHINE SCREW, NUT OR WASHERED WINGNUT.

PRODUCT REVISED
as complying with the Florida Building Code
Acceptance No 10-0222.03
Expiration Date 03/31/2015
By Helena A. Melo
Miami Dade Product Control Division

KNEZEVICH ASSOCIATES
Consulting Engineers
2590 S.W. 105th Terrace * Davie, Florida 33324
T (954) 821-6933 * F (954) 452-7960 * COA 27989
email: VJK@Knezevich.com

Copyright © 2010 VJKnezevich & Associates, LLC d/b/a Knezevich Associates

0.050" ALUMINUM STORM PANEL

JM Jenmar Corporation USA
JM Steel Corporation
1050 North Steel Circle
Huger, SC 29450
(770) 231-1335
(412) 963-9071

revisions			
no	date	by	description

V.J. Knezevich
Professional Engineer
FL License No. PE 0010983

FEB 04 2010

drawn by	scale
VJK	AS NOTED

date 02/04/2010

drawing no. 10-103

sheet 4 of 5

TABLE 2

MINIMUM STORM PANEL SEPARATION FROM GLASS			
POSITIVE DESIGN LOAD (W) (P.S.F.)	POSITIVE DESIGN LOAD (W) (P.S.F.)	MIN. SEP. FOR ALL INSTALLATIONS LESS THAN 30' ABOVE GRADE (INCHES)	MIN. SEP. FOR ALL INSTALLATIONS GREATER THAN 30' ABOVE GRADE (INCHES)
19.5	3' - 0''	3-1/2''	1''
	5' - 0''	3-1/2''	1''
	7' - 0''	3-1/2''	1-1/4''
	8' - 8''	3-1/2''	1-1/2''
	10' - 6''	4-3/8''	2-1/8''
	12' - 0''	5-7/8''	2-3/4''
30.0	3' - 0''	3-1/2''	1''
	5' - 0''	3-1/2''	1-1/8''
	7' - 0''	3-1/2''	1-3/8''
	8' - 8''	3-1/2''	1-3/4''
	10' - 6''	4-3/8''	2-3/4''
	10' - 9''	5-7/8''	2-3/4''
40.0	3' - 0''	3-1/2''	1''
	5' - 0''	3-1/2''	1-1/8''
	7' - 0''	3-1/2''	1-1/2''
	8' - 8''	3-1/2''	2-1/8''
	10' - 0''	4-3/8''	2-3/4''
60.0	3' - 0''	3-1/2''	1''
	5' - 0''	3-1/2''	1-1/8''
	7' - 0''	3-1/2''	1-5/8''
	8' - 8''	3-1/2''	2-5/8''
	8' - 10''	4-3/8''	2-3/4''
80.0	3' - 0''	3-1/2''	1''
	5' - 0''	3-1/2''	1-1/4''
	6' - 9''	3-1/2''	1-3/4''
120.0	3' - 0''	3-1/2''	1''
	4' - 6''	3-1/2''	1-1/4''
150.0	3' - 0''	3-1/2''	1''
	3' - 7''	3-1/2''	1-1/8''

TABLE 2 NOTE:

1. ENTER TABLE 2 WITH POSITIVE DESIGN LOAD TO DETERMINE MIN. STORM SHUTTER SEPARATION FROM GLASS.

TABLE 1

STORM PANEL MAX. SPAN SCHEDULE	
DESIGN LOAD W (P.S.F.)	ALL MOUNTING CONDITIONS
	L MAX. (FT-IN)
19.5	12' - 0''
25.0	11' - 3''
30.0	10' - 9''
33.0	10' - 6''
35.0	10' - 4''
40.0	10' - 0''
45.0	9' - 8''
50.0	9' - 5''
55.0	9' - 2''
60.0	8' - 10''
62.0	8' - 8''
65.0	8' - 3''
70.0	7' - 8''
75.0	7' - 2''
80.0	6' - 9''
85.0	6' - 4''
90.0	6' - 0''
95.0	5' - 8''
100.0	5' - 4''
108.0	5' - 0''
115.0	4' - 8''
120.0	4' - 6''
130.0	4' - 1''
140.0	3' - 10''
150.0	3' - 7''

TABLE 1 NOTES:

1. TABLE 1 IS APPLICABLE FOR BOTH POSITIVE AND NEGATIVE LOADS.
2. FOR DESIGN LOADS BETWEEN TABULATED VALUES. USE NEXT HIGHER LOAD OR LINEAR INTERPOLATION MAY BE USED TO DETERMINE ALLOWABLE SPANS.

PRODUCT REVISED
as complying with the Florida
Building Code
Acceptance No 10-0222.03
Expiration Date 03/31/2015
By
Miami Dade Product Control
Division

KNEZEVICH ASSOCIATES
Consulting Engineers
2590 S.W. 105th Terrace * Davie, Florida 33324
T (954) 821-6933 * F (954) 452-7960 * COA 27989
email: VJK@Knezevich.com

Copyright © 2010 VJKnezevich & Associates, LLC d/b/a Knezevich Associates

0.050" ALUMINUM STORM PANEL

JM Steel Corporation
1050 North Steel Circle
Huger, SC 29450
(770) 231-1335
(412) 963-9071

Jennmar Corporation

revisions

no	date	by	description

V.J. Knezevich
Professional Engineer
FL License No.: PE 0049983

FEB 04 2010

drawn by VJK
scale AS NOTED
date 02/04/2010
drawing no. 10-103
sheet 5 of 5