MIAMI-DADE COUNTY
BUILDING CODE COMPLIANCE OFFICE (BCCO)
PRODUCT CONTROL DIVISION

MIAMI-DADE COUNTY, FLORIDA
METRO-DADE FLAGLER BUILDING
140 WEST FLAGLER STREET, SUITE 1603
MIAMI, FLORIDA 33130-1563
(305) 375-2901 FAX (305) 375-2908
www.miamidade.gov/Buildingcode

NOTICE OF ACCEPTANCE (NOA)

Delta Doors Manufacturing Co.
7500 NW 69th Ave
Miami, FL 33166

SCOPE:

This NOA is being issued under the applicable rules and regulations governing the use of construction materials. The documentation submitted has been reviewed by Miami-Dade County Product Control Division and accepted by the Board of Rules and Appeals (BORA) to be used in Miami Dade County and other areas where allowed by the Authority Having Jurisdiction (AHJ).

This NOA shall not be valid after the expiration date stated below. The Miami-Dade County Product Control Division (In Miami Dade County) and/or the AHJ (in areas other than Miami Dade County) reserve the right to have this product or material tested for quality assurance purposes. If this product or material fails to perform in the accepted manner, the manufacturer will incur the expense of such testing and the AHJ may immediately revoke, modify, or suspend the use of such product or material within their jurisdiction. BORA reserves the right to revoke this acceptance, if it is determined by Miami-Dade County Product Control Division that this product or material fails to meet the requirements of the applicable building code.

This product is approved as described herein, and has been designed to comply with the Florida Building Code, including High Velocity Hurricane Zone of the Florida Building Code.

DESCRIPTION: Series "DHS-500" Aluminum Storefront System-LMI

APPROVAL DOCUMENT: Drawing N0. **W02-27,** titled "Series-DH-500 Alum Window wall Storefront Sys-", sheets 1 through 11 of 11, prepared by Al Farooq Corporation, dated 03-29-02 and last revised on August 12, 2008, signed and sealed by Dr. Humayoun Farooq, P.E., bearing the Miami-Dade County Product Control renewal stamp with the Notice of Acceptance number and expiration date by the Miami-Dade County Product Control Division.

MISSILE IMPACT RATING: Large Missile Impact Resistant

Limitation:

1. Average width (W) is inclusive of door mullion (1-3/8") and to be measured centre line of the mullion.
2. Lower capacity of mullion or Door mullion or Doors may control. .
3. **Only** Delta Doors single & double doors (under separate NOA) may be installed with this system.

LABELING: Each unit shall bear a permanent label with the manufacturer's name or logo, city, state and following statement: "Miami-Dade County Product Control Approved", unless otherwise noted herein.

RENEWAL of this NOA shall be considered after a renewal application has been filed and there has been no change in the applicable building code negatively affecting the performance of this product.

TERMINATION of this NOA will occur after the expiration date or if there has been a revision or change in the materials, use, and/or manufacture of the product or process. Misuse of this NOA as an endorsement of any product, for sales, advertising or any other purposes shall automatically terminate this NOA. Failure to comply with any section of this NOA shall be cause for termination and removal of NOA.

ADVERTISEMENT: The NOA number preceded by the words Miami-Dade County, Florida, and followed by the expiration date may be displayed in advertising literature. If any portion of the NOA is displayed, then it shall be done in its entirety.

INSPECTION: A copy of this entire NOA shall be provided to the user by the manufacturer or its distributors and shall be available for inspection at the job site at the request of the Building Official.

This NOA **revises** NOA # **09-0218.05** consists of this page 1 and evidence sheet E-1 as well as approval document mentioned above.

The submitted documentation was reviewed by **Ishaq I. Chanda, P.E.**

MIAMI-DADE COUNTY APPROVED

7/28/10

NOTICE OF ACCEPTANCE: EVIDENCE SUBMITTED

A. DRAWINGS

1. Manufacturer's die drawings and sections. (transferred from file # **09-0218.05)**
2. Drawing N0. **W02-27,** titled "Series-DHS-500 Alum Window wall Storefront Sys-", sheets 1 through 11 of 11, prepared by Al Farooq Corporation, dated 03-29-02 and last revised on Jun 18, 2010, signed and sealed by Javad Ahmad, P. E.

B. TESTS (transferred from file # **09-0218.05)**

1. Test reports on
   1) Air Infiltration Test, per FBC, TAS 202-94
   2) Water Infiltration Resistant Test per FBC, TAS 202-94
   3) Uniform Static Air Pressure Test, Loading per FBC TAS 202-94
   4) Large Missile Impact Test per FBC, TAS 201-94
   5) Cyclic Wind Pressure Loading per FBC, TAS 203-94

Along with marked-up drawings and installation diagram of aluminum single hung fixed window, prepared by Fenestration Testing Laboratory, Inc., Test Report No. **FTL-5662**, dtd 06/29/08, signed & sealed by Carlos Rionda, P.E.

2. Additional test reports:

2.1 Test Reports No. **FTL-6075**, dtd 10/19/2009, per TAS 202, 201/203-4, signed & sealed by Julio E. Gonzales, P.E.

2.2 Test Reports No. **FTL-4042**, dtd 01/26/04 & **FTL-4115**, dtd 03/03/2004, per TAS 202, 201/203-4, signed & sealed by Edmundo Largaespada, P.E.

2.2 Reference test Reports No(s) **FTL-4254**, **FTL-4306** and **FTL-4320** per TAS 202-94, 201/203-94, issued by Fenestration testing Laboratories Inc.

C. CALCULATIONS

1. Anchor verification & comparative and structural analysis per FBC 2007, prepared by AL-Farooq Corporation, dated 12/16/09 and last revised on June 18, 2010, signed and sealed by Javad Ahmad, P.E.
2. Glazing complies w/ ASTME-1300-02 &-04

D. QUALITY ASSURANCE

1. Miami Dade /Building Code Compliance Office (BCCO).

E. MATERIAL CERTIFICATIONS

1. Notice of Acceptance No. **07-1116.04** issued to E.I. DuPont DeNemours for "SentryGlasPlus", expiring on 01/14/2012.
2. Notice of Acceptance No. **08-0520.08** issued to "Solutia Inc." for "Vanceva (T.M.), composite interlayer, expiring on 04/17/13.

F. STATEMENTS

1. Statement letter of compliance to FBC 2007 and "No financial interest", dated 06/15/10 signed and sealed by Javad Ahmad, P.E.
2. Statement letter of Lab compliance, as a part of above referenced test reports

G. OTHER

1. This NOA **revises** NOA # **09-0218.05,** expiring on 05/20/14.
2. Previous related NOA(s) are # **08-0618.07 (07-0718.07)**
3. Test proposals # **02-0472** & # **06-0182** and dated 06/11/09, approved by BCCO.

Ishaq I. Chanda

Ishaq I. Chanda, P. E.
Product Control Examiner
NOA No 10-0308.02
Expiration Date: May 20, 2014
Approval Date: August 18, 2010

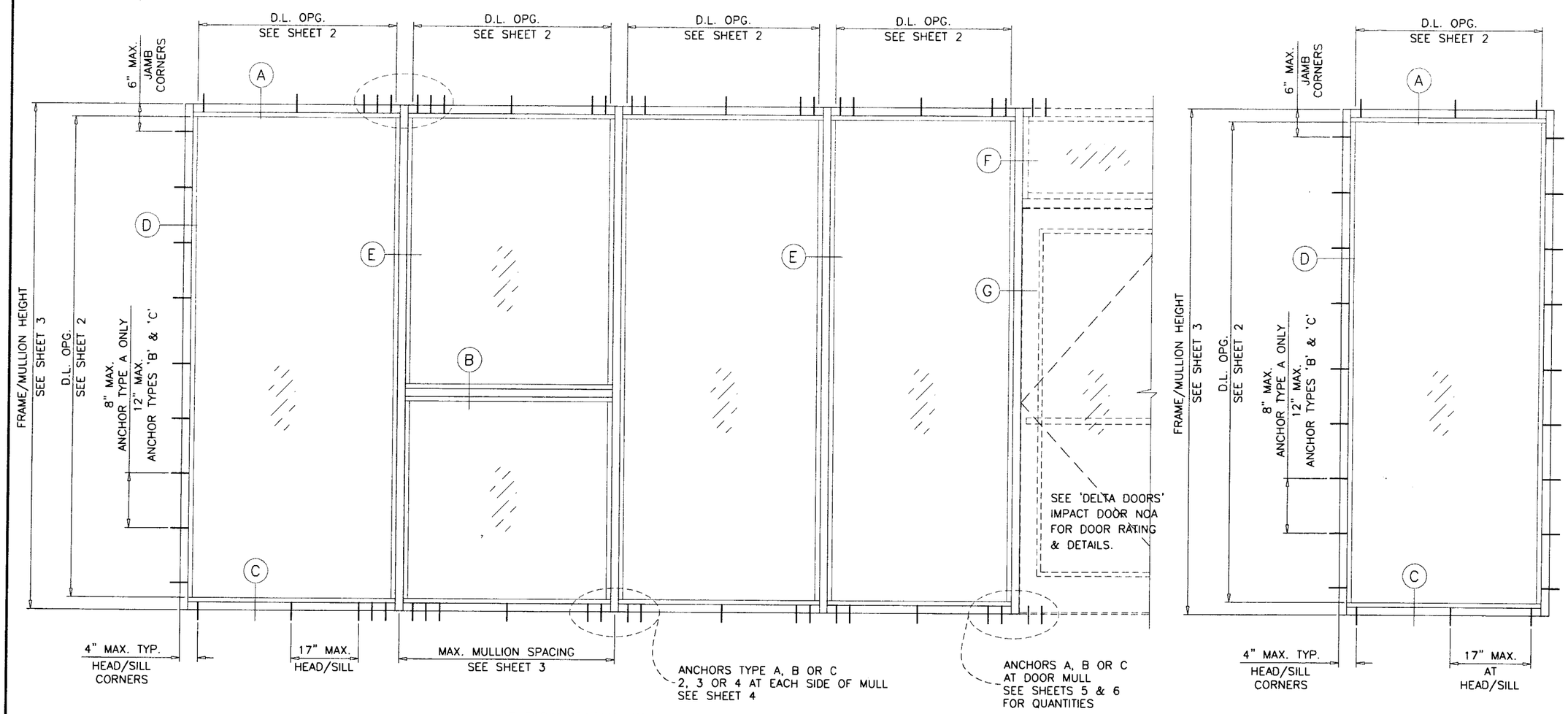

TYPICAL ELEVATIONS

D.L.O. HEIGHT = FRAME HEIGHT – 5.5" (WINDOW WALL SYS. W/O HORIZONTALS)
D.L.O. WIDTH = FRAME WIDTH – 5.5" (SINGLE PANEL)
MULLION CL TO CL SPACING – 3.75" (MULTIPLE PANELS)

DHS-500 ALUMINUM WINDOW WALL STOREFRONT SYSTEM

THIS SYSTEM MAY BE USED IN CONJUNCTION WITH MIAMI-DADE COUNTY APPR'D LARGE MISSILE IMPACT RESISTANT DOORS. LOWER DESIGN PRESSURE FROM STOREFRONT OR DOOR APPROVAL WILL APPLY TO ENTIRE SYSTEM.

CODE REQUIREMENTS FOR SAFEGUARDS MUST BE OBSERVED.

THIS PRODUCT HAS BEEN DESIGNED AND TESTED TO COMPLY WITH THE REQUIREMENTS OF THE FLORIDA BUILDING CODE 2007 EDITION INCLUDING HIGH VELOCITY HURRICANE ZONE (HVHZ).

WOOD BUCKS BY OTHERS, MUST BE ANCHORED PROPERLY TO TRANSFER LOADS TO THE STRUCTURE.

ANCHORS SHALL BE AS LISTED, SPACED AS SHOWN ON DETAILS, ANCHORS EMBEDMENT TO BASE MATERIAL SHALL BE BEYOND WALL DRESSING OR STUCCO.

ANCHORING OR LOADING CONDITIONS NOT SHOWN IN THESE DETAILS ARE NOT PART OF THIS APPROVAL.

A LOAD DURATION INCREASE IS USED IN DESIGN OF ANCHORS INTO WOOD ONLY.

MATERIALS INCLUDING BUT NOT LIMITED TO STEEL/METAL SCREWS, THAT COME INTO CONTACT WITH OTHER DISSIMILAR MATERIALS SHALL MEET THE REQUIREMENTS OF 2007 FLORIDA BLDG. CODE SECTION 2003.8.4.

THIS SYSTEM IS RATED FOR LARGE & SMALL MISSILE IMPACT. SHUTTERS ARE NOT REQUIRED.

INSTRUCTIONS:

USE CHARTS AS FOLLOWS.

STEP 1 DETERMINE DESIGN WIND LOAD REQUIREMENT BASED ON WIND VELOCITY, BLDG. HEIGHT, WIND ZONE USING APPLICABLE ASCE 7 STANDARD.

STEP 2 SEE CHARTS ON SHEET 2 FOR DESIGN LOAD CAPACITY OF DESIRED GLASS SIZE.

STEP 3 CHECK MULLION CAPACITY FOR A GIVEN SPACING AND HEIGHT USING CHARTS ON SHEET 3 FOR STOREFRONT MULLION AND SHEETS 5 & 6 FOR DOOR MULLION. THE CAPACITY SHOULD EXCEED THE DESIGN LOAD.

STEP 4 USING CHARTS ON SHEET 4 FOR STOREFRONT MULLION AND CHARTS ON SHEETS 5 & 6 FOR DOOR MULLION SELECT ANCHOR OPTION WITH DESIGN RATING MORE THAN DESIGN LOAD SPECIFIED IN STEP 1 ABOVE.

STEP 5 THE LOWEST VALUE RESULTING FROM STEPS 2, 3 AND 4 SHALL APPLY TO ENTIRE SYSTEM.

PRODUCT REVISED
as complying with the Florida Building Code
Acceptance No 10-0308.02
Expiration Date MAY 20, 2014
By Ishaq I. Chanda
Miami Dade Product Control Division

LAMINATED GLASS
LAM. INSUL. GLASS
LARGE MISSILE IMPACT

Engr: JAVAD AHMAD
CIVIL
FLA. PE # 70592
C.A.N. 3538
JUN 18 2010

AL-FAROOQ CORPORATION
ENGINEERS & PRODUCT DEVELOPMENT
1235 S.W. 87 AVE
MIAMI, FLORIDA 33174
TEL. (305) 264-8100 FAX. (305) 262-6978

STORE\02-27DD

DHS-500 ALUM WINDOW WALL STOREFRONT SYS.

DELTA DOORS
7500 N.W. 69TH AVE.
MIAMI, FL 33166
TEL. (305) 888-0077 FAX. (305) 884-3111

revisions:

no	date	by	description
A	12.28.05		UPDATED FOR 2004 FBC
B	02.26.08		REV. PER BCCO COMMENTS
C	08.06.08		NO CHANGE THIS SHEET
D	11.16.09		LAM. INSUL. GLASS ADDED
E	06.15.10		REV. PER BCCO COMMENTS

date: 03-29-02
scale: 1/2"=1'-0"
dr. by: HAMID
chk. by:

drawing no.
W02-27

GLASS LOAD CAPACITY – PSF					
NOMINAL DIMS.		GLASS TYPES 'A' & 'B'		GLASS TYPE 'C'	
D.L.O. WIDTH	D.L.O. HEIGHT	EXT.(+)	INT.(–)	EXT.(+)	INT.(–)
28"	60"	100.0	130.0	120.0	130.0
32"		100.0	130.0	120.0	130.0
36"		100.0	130.0	120.0	130.0
40"		100.0	130.0	120.0	130.0
44"		100.0	130.0	120.0	130.0
48"		100.0	130.0	120.0	130.0
52"		100.0	130.0	120.0	130.0
56"		100.0	130.0	120.0	130.0
60"		100.0	130.0	120.0	130.0
28"	66"	100.0	130.0	120.0	130.0
32"		100.0	130.0	120.0	130.0
36"		100.0	130.0	120.0	130.0
40"		100.0	130.0	120.0	130.0
44"		100.0	130.0	120.0	130.0
48"		100.0	130.0	120.0	130.0
52"		100.0	130.0	120.0	130.0
56"		100.0	130.0	120.0	130.0
60"		100.0	130.0	120.0	130.0
28"	72"	100.0	130.0	120.0	130.0
32"		100.0	130.0	120.0	130.0
36"		100.0	130.0	120.0	130.0
40"		100.0	130.0	120.0	130.0
44"		100.0	130.0	120.0	130.0
48"		100.0	130.0	120.0	130.0
52"		100.0	130.0	120.0	130.0
56"		100.0	130.0	120.0	130.0
60"		100.0	130.0	120.0	130.0
28"	78"	100.0	130.0	120.0	130.0
32"		100.0	130.0	120.0	130.0
36"		100.0	130.0	120.0	130.0
40"		100.0	130.0	120.0	130.0
44"		100.0	130.0	120.0	130.0
48"		100.0	130.0	120.0	130.0
52"		100.0	130.0	120.0	130.0
56"		100.0	130.0	120.0	130.0
60"		100.0	130.0	120.0	130.0
28"	84"	100.0	130.0	120.0	130.0
32"		100.0	130.0	120.0	130.0
36"		100.0	130.0	120.0	130.0
40"		100.0	130.0	120.0	130.0
44"		100.0	130.0	120.0	130.0
48"		100.0	130.0	120.0	130.0
52"		100.0	130.0	120.0	130.0
56"		100.0	130.0	120.0	130.0
60"		100.0	130.0	120.0	130.0
28"	90"	100.0	130.0	120.0	130.0
32"		100.0	130.0	120.0	130.0
36"		100.0	130.0	120.0	130.0
40"		100.0	130.0	120.0	130.0
44"		100.0	130.0	120.0	130.0
48"		100.0	130.0	120.0	130.0
52"		100.0	130.0	120.0	130.0
56"		100.0	130.0	120.0	130.0

GLASS LOAD CAPACITY – PSF					
NOMINAL DIMS.		GLASS TYPES 'A' & 'B'		GLASS TYPE 'C'	
D.L.O. WIDTH	D.L.O. HEIGHT	EXT.(+)	INT.(–)	EXT.(+)	INT.(–)
28"	96"	100.0	130.0	120.0	130.0
32"		100.0	130.0	120.0	130.0
36"		100.0	130.0	120.0	130.0
40"		100.0	130.0	120.0	130.0
44"		100.0	130.0	120.0	130.0
48"		100.0	130.0	120.0	130.0
52"		100.0	127.8	120.0	130.0
28"	102"	100.0	130.0	120.0	130.0
32"		100.0	130.0	120.0	130.0
36"		100.0	130.0	120.0	130.0
40"		100.0	130.0	120.0	130.0
44"		100.0	130.0	120.0	130.0
48"		100.0	129.4	120.0	130.0
28"	108"	100.0	130.0	120.0	130.0
32"		100.0	130.0	120.0	130.0
36"		100.0	130.0	120.0	130.0
40"		100.0	130.0	120.0	130.0
44"		100.0	130.0	120.0	130.0
28"	114"	100.0	130.0	120.0	130.0
32"		100.0	130.0	120.0	130.0
36"		100.0	130.0	120.0	130.0
40"		100.0	130.0	120.0	130.0
44-1/4"	114-1/2"	100.0	130.0	120.0	130.0

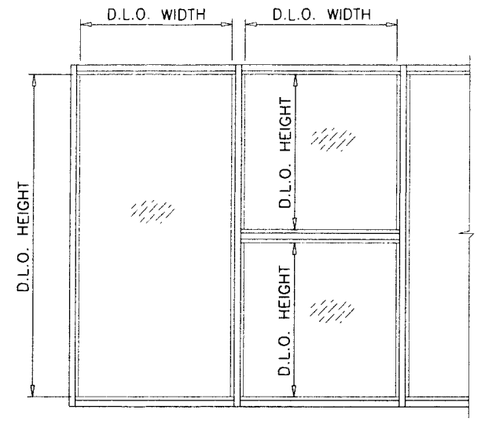

PRODUCT REVISED
as complying with the Florida
Buiding Code
Acceptance No 10-0308.02
Expiration Date MAY 20, 2014
By Ishaq I. Chanda
Miami Dade Product Control
Division

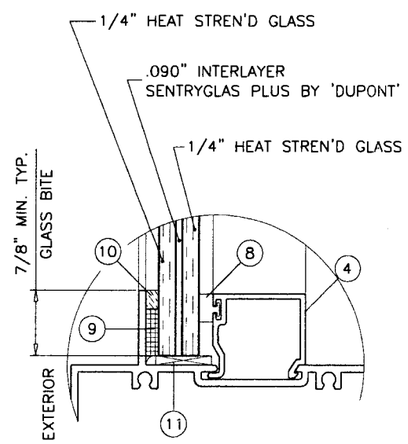

GLASS TYPE 'A'

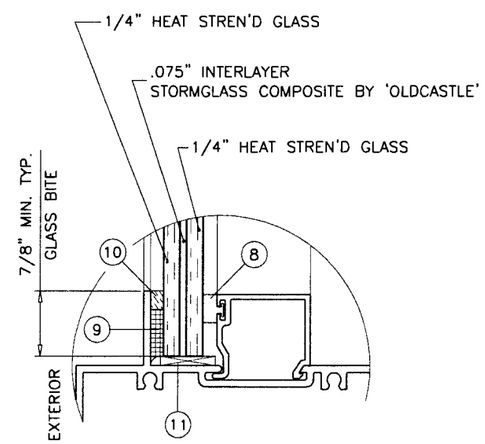

GLASS TYPE 'B'

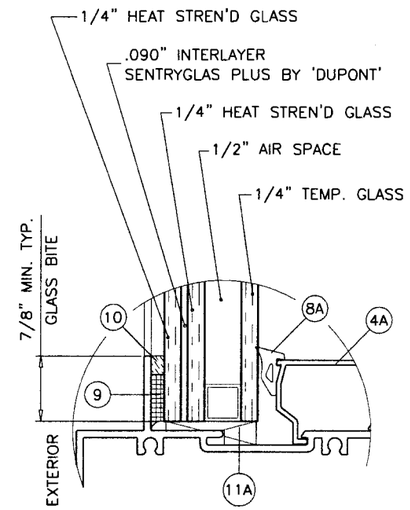

GLASS TYPE 'C'

GLAZING OPTIONS

NOTE:
GLASS CAPACITIES ON THIS SHEET ARE
BASED ON ASTM E1300-04 (3 SEC. GUSTS).

Engr: JAVAD AHMAD
CIVIL
FLA. PE # 70592
C.A.N. 3538
JUN 18 2010

AL-FAROOQ CORPORATION
ENGINEERS & PRODUCT DEVELOPMENT
1235 S.W. 87 AVE
MIAMI, FLORIDA 33174
TEL. (305) 264-8100 FAX. (305) 262-6978
STORE\02-27DD

DHS-500 ALUM WINDOW WALL STOREFRONT SYS.

DELTA DOORS
7500 N.W. 69TH AVE.
MIAMI, FL 33166
TEL. (305) 888-0077 FAX. (305) 884-3111

(revisions:

no	date	by	description
A	12.28.05		CHARTS REV.
B	02.26.08		REV. PER BCCO COMMENTS
C	08.06.08		NO CHANGE THIS SHEET
D	11.16.09		LAM. INSUL. GLASS ADDED
E	06.15.10		REV. PER BCCO COMMENTS

date: 03-29-02
scale: 1/2" = 1"
dr. by: HAMID
chk. by:

drawing no.
W02-27

MULLION LOAD CAPACITY - PSF
MULLIONS WITHOUT INTERMEDIATE HORIZONTALS

NOMINAL DIMS.		MULLION 'M1'	MULLION 'M2'	MULLION 'M3'	MULLION 'M4'	MULLION 'M5'
WIDTH (W)	FRAME HEIGHT	EXT. (+) INT. (-)	EXT. (+) INT. (-)	EXT. (+) INT. (-)	EXT. (+) INT. (-)	EXT. (+) INT. (-)
32"	72"	100.0	130.0	130.0	130.0	130.0
36"		100.0	130.0	130.0	130.0	130.0
40"		100.0	130.0	130.0	130.0	130.0
44"		100.0	130.0	130.0	130.0	130.0
48"		100.0	130.0	130.0	130.0	130.0
52"		100.0	130.0	130.0	130.0	130.0
56"		100.0	130.0	130.0	130.0	130.0
60"		100.0	130.0	130.0	130.0	130.0
32"	78"	100.0	130.0	130.0	130.0	130.0
36"		100.0	130.0	130.0	130.0	130.0
40"		100.0	130.0	130.0	130.0	130.0
44"		100.0	130.0	130.0	130.0	130.0
48"		100.0	130.0	130.0	130.0	130.0
52"		100.0	130.0	130.0	130.0	130.0
56"		100.0	130.0	130.0	130.0	130.0
60"		100.0	130.0	130.0	130.0	130.0
32"	84"	100.0	130.0	130.0	130.0	130.0
36"		100.0	130.0	130.0	130.0	130.0
40"		100.0	130.0	130.0	130.0	130.0
44"		100.0	130.0	130.0	130.0	130.0
48"		96.5	130.0	130.0	130.0	130.0
52"		91.0	130.0	130.0	130.0	130.0
56"		86.5	130.0	130.0	130.0	130.0
60"		40.0	130.0	130.0	130.0	130.0
32"	90"	100.0	130.0	130.0	130.0	130.0
36"		100.0	130.0	130.0	130.0	130.0
40"		95.4	130.0	130.0	130.0	130.0
44"		88.1	130.0	130.0	130.0	130.0
48"		82.1	130.0	130.0	130.0	130.0
52"		77.2	130.0	130.0	130.0	130.0
56"		40.0	130.0	130.0	130.0	130.0
60"		40.0	130.0	130.0	130.0	130.0
32"	96"	100.0	130.0	130.0	130.0	130.0
36"		90.7	130.0	130.0	130.0	130.0
40"		82.5	130.0	130.0	130.0	130.0
44"		76.0	130.0	130.0	130.0	130.0
48"		70.7	130.0	130.0	130.0	130.0
52"		40.0	125.1	130.0	130.0	130.0
56"		40.0	118.3	130.0	130.0	130.0
60"		40.0	112.5	129.5	130.0	130.0
32"	98"	96.5				
36"		86.6				
40"		78.8				
44"		72.5				
48"		67.4				

MULLION LOAD CAPACITY - PSF
MULLIONS WITHOUT INTERMEDIATE HORIZONTALS

NOMINAL DIMS.		MULLION 'M1'	MULLION 'M2'	MULLION 'M3'	MULLION 'M4'	MULLION 'M5'
WIDTH (W)	FRAME HEIGHT	EXT. (+) INT. (-)	EXT. (+) INT. (-)	EXT. (+) INT. (-)	EXT. (+) INT. (-)	EXT. (+) INT. (-)
32"	102"	40.0	130.0	130.0	130.0	130.0
36"		40.0	130.0	130.0	130.0	130.0
40"		40.0	130.0	130.0	130.0	130.0
44"		40.0	126.1	130.0	130.0	130.0
48"		40.0	117.0	130.0	130.0	130.0
52"		40.0	109.5	126.1	130.0	130.0
56"		40.0	103.2	118.8	130.0	130.0
32"	108"	40.0	130.0	130.0	130.0	130.0
36"		40.0	130.0	130.0	130.0	130.0
40"		40.0	121.6	130.0	130.0	130.0
44"		40.0	111.7	128.5	130.0	130.0
48"		40.0	103.5	119.1	130.0	130.0
52"		40.0	96.7	111.3	122.3	130.0
32"	114"	40.0	130.0	130.0	130.0	130.0
36"		40.0	119.8	130.0	130.0	130.0
40"		40.0	108.7	125.1	130.0	130.0
44"		40.0	99.6	114.7	126.0	130.0
48"		40.0	92.2	106.2	116.7	130.0
32"	120"	40.0	128.2	130.0	130.0	130.0
36"		40.0	107.8	124.1	130.0	130.0
40"		40.0	97.7	112.4	123.6	130.0
44"		40.0	89.5	103.0	113.2	126.7
48"		37.6	82.7	95.3	104.7	117.1

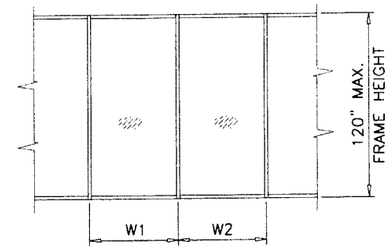

$$\text{WIDTH (W)} = \frac{W1 + W2}{2}$$

PRODUCT REVISED
as complying with the Florida
Buiding Code
Acceptance No 10-0308.02
Expiration Date MAY 20, 2014
By Ishaq I. Chanda
Miami Dade Product Control
Division

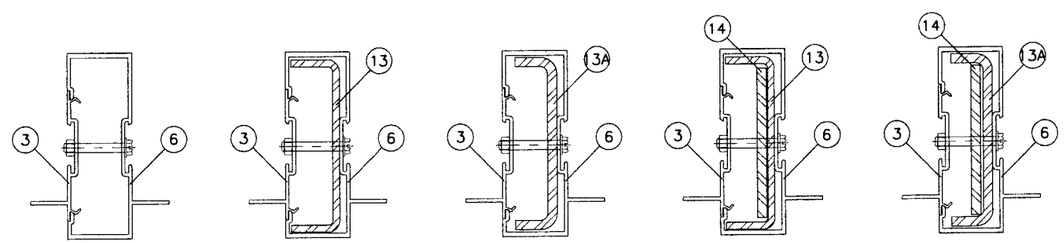

MULLION 'M1' MULLION 'M2' MULLION 'M3' MULLION 'M4' MULLION 'M5'

STEEL REINFORCING LENGTHS = FRAME HEIGHTS

Engr: JAVAD AHMAD
CIVIL
FLA. PE # 70592
C.A.N. 3538

JUN 18 2010

AL-FAROOQ CORPORATION
ENGINEERS & PRODUCT DEVELOPMENT
1235 S.W. 87 AVE
MIAMI, FLORIDA 33174
TEL. (305) 264-8100 FAX. (305) 262-6978

STORE\02-27DD

DHS-500 ALUM WINDOW WALL STOREFRONT SYS.

DELTA DOORS
7500 N.W. 69TH AVE.
MIAMI, FL 33166
TEL. (305) 888-0077 FAX. (305) 884-3111

revisions:

no	date	by	description
A	12.28.05		CHARTS REV.
B	02.26.08		REV. PER BCCO COMMENTS
C	08.06.08		MULLION CHART REV.
D	11.16.09		CHART REV.
E	06.15.10		REV. PER BCCO COMMENTS

date: 03-29-02
scale: 1/2" = 1"
dr. by: HAMID
chk. by:

drawing no.
W02-27

sheet 3 of 11

MULLION LOAD CAPACITY – PSF
MULLIONS WITH INTERMEDIATE HORIZONTALS

NOMINAL DIMS.		MULLION 'M1'	MULLION 'M2'	MULLION 'M3'	MULLION 'M4'	MULLION 'M5'
WIDTH (W)	FRAME HEIGHT	EXT. (+) INT. (–)	EXT. (+) INT. (–)	EXT. (+) INT. (–)	EXT. (+) INT. (–)	EXT. (+) INT. (–)
32"	72"	100.0	130.0	130.0	130.0	130.0
36"		100.0	130.0	130.0	130.0	130.0
40"		100.0	130.0	130.0	130.0	130.0
44"		100.0	130.0	130.0	130.0	130.0
48"		100.0	130.0	130.0	130.0	130.0
52"		100.0	130.0	130.0	130.0	130.0
56"		100.0	130.0	130.0	130.0	130.0
60"		98.9	130.0	130.0	130.0	130.0
32"	78"	100.0	130.0	130.0	130.0	130.0
36"		100.0	130.0	130.0	130.0	130.0
40"		100.0	130.0	130.0	130.0	130.0
44"		100.0	130.0	130.0	130.0	130.0
48"		100.0	130.0	130.0	130.0	130.0
52"		96.2	130.0	130.0	130.0	130.0
56"		89.4	130.0	130.0	130.0	130.0
60"		83.4	130.0	130.0	130.0	130.0
32"	84"	100.0	130.0	130.0	130.0	130.0
36"		100.0	130.0	130.0	130.0	130.0
40"		100.0	130.0	130.0	130.0	130.0
44"		97.1	130.0	130.0	130.0	130.0
48"		89.0	130.0	130.0	130.0	130.0
52"		82.2	130.0	130.0	130.0	130.0
56"		76.3	130.0	130.0	130.0	130.0
60"		40.0	128.1	130.0	130.0	130.0
32"	90"	100.0	130.0	130.0	130.0	130.0
36"		100.0	130.0	130.0	130.0	130.0
40"		92.2	130.0	130.0	130.0	130.0
44"		83.8	130.0	130.0	130.0	130.0
48"		76.8	130.0	130.0	130.0	130.0
52"		70.9	128.8	130.0	130.0	130.0
56"		40.0	119.6	130.0	130.0	130.0
60"		40.0	111.6	128.4	130.0	130.0
32"	96"	100.0	130.0	130.0	130.0	130.0
36"		89.2	130.0	130.0	130.0	130.0
40"		80.3	130.0	130.0	130.0	130.0
44"		73.0	130.0	130.0	130.0	130.0
48"		66.9	122.6	130.0	130.0	130.0
52"		40.0	113.2	130.0	130.0	130.0
56"		40.0	105.1	121.0	130.0	130.0
60"		40.0	98.1	112.9	124.0	130.0
32"	98"	96.1				
36"		85.4				
40"		76.9				
44"		69.9				
48"		64.0				

MULLION LOAD CAPACITY – PSF
MULLIONS WITH INTERMEDIATE HORIZONTALS

NOMINAL DIMS.		MULLION 'M1'	MULLION 'M2'	MULLION 'M3'	MULLION 'M4'	MULLION 'M5'
WIDTH (W)	FRAME HEIGHT	EXT. (+) INT. (–)	EXT. (+) INT. (–)	EXT. (+) INT. (–)	EXT. (+) INT. (–)	EXT. (+) INT. (–)
32"	102"	40.0	130.0	130.0	130.0	130.0
36"		40.0	130.0	130.0	130.0	130.0
40"		40.0	130.0	130.0	130.0	130.0
44"		40.0	118.5	130.0	130.0	130.0
48"		40.0	108.6	125.0	130.0	130.0
52"		40.0	100.2	115.4	126.8	130.0
56"		40.0	93.1	107.1	117.7	130.0
32"	108"	40.0	130.0	130.0	130.0	130.0
36"		40.0	129.1	130.0	130.0	130.0
40"		40.0	116.2	130.0	130.0	130.0
44"		40.0	105.7	121.6	130.0	130.0
48"		40.0	96.9	111.5	122.5	130.0
52"		40.0	89.4	102.9	113.1	126.5
32"	114"	40.0	130.0	130.0	130.0	130.0
36"		40.0	115.9	130.0	130.0	130.0
40"		40.0	104.3	120.1	130.0	130.0
44"		40.0	94.8	109.2	119.9	130.0
48"		40.0	86.9	100.1	109.9	123.0
32"	120"	40.0	125.5	130.0	130.0	130.0
36"		40.0	104.6	120.4	130.0	130.0
40"		40.0	94.1	108.4	119.1	130.0
44"		38.5	85.6	98.5	108.2	121.1
48"		35.3	78.5	90.3	99.2	111.0

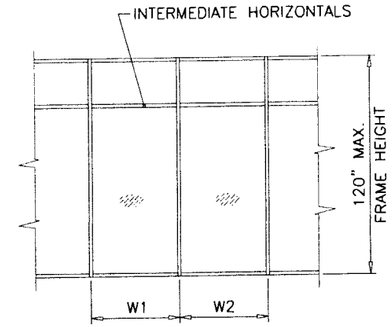

$$\text{WIDTH (W)} = \frac{W1 + W2}{2}$$

PRODUCT REVISED
as complying with the Florida Buiding Code
Acceptance No 10-0305.02
Expiration Date MAY 20, 2014
By Ishaq I. Chand
Miami Dade Product Control Division

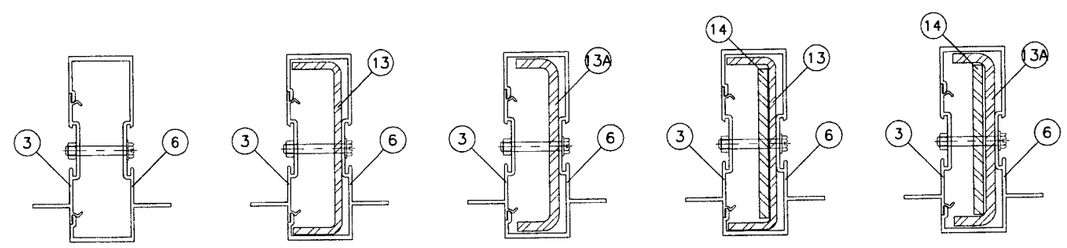

MULLION 'M1' MULLION 'M2' MULLION 'M3' MULLION 'M4' MULLION 'M5'

STEEL REINFORCING LENGTHS = FRAME HEIGHTS

Engr: JAVAD AHMAD
CIVIL
FLA. PE # 70592
C.A.N. 3538
JUN 18 2010

AL-FAROOQ CORPORATION
ENGINEERS & PRODUCT DEVELOPMENT
1235 S.W. 87 AVE
MIAMI, FLORIDA 33174
TEL. (305) 264-8100 FAX. (305) 262-6978

STORE\02-27DD

DHS-500 ALUM WINDOW WALL STOREFRONT SYS.

DELTA DOORS
7500 N.W. 69TH AVE.
MIAMI, FL 33166
TEL. (305) 888-0077 FAX. (305) 884-3111

revisions:

no	date	by	description
D	11.16.09		CHART REV.
E	06.15.10		REV. PER BCCO COMMENTS

date: 03-29-02
scale: 1/2" = 1"
dr. by: HAMID
chk. by:

drawing no.
W02-27

sheet 3.1 of 11

ANCHOR LOAD CAPACITY – PSF
EXT.(+) & INT.(–)

NOMINAL DIMS.		ANCHORS TYPE 'A'			ANCHORS TYPE 'B'		ANCHORS TYPE 'C'	
WIDTH (W)	FRAME HEIGHT	A2	A3	A4	B2	B3	C2	C3
32"	72"	130.0	130.0	130.0	130.0	130.0	130.0	130.0
36"		127.2	130.0	130.0	130.0	130.0	130.0	130.0
40"		114.5	130.0	130.0	130.0	130.0	130.0	130.0
44"		104.1	130.0	130.0	130.0	130.0	130.0	130.0
45"		101.8	130.0	130.0	130.0	130.0	130.0	130.0
48"		95.4	130.0	130.0	130.0	130.0	130.0	130.0
52"		88.1	123.3	130.0	130.0	130.0	130.0	130.0
56"		81.8	114.5	130.0	130.0	130.0	130.0	130.0
60"		76.3	106.9	130.0	130.0	130.0	130.0	130.0
32"	78"	130.0	130.0	130.0	130.0	130.0	130.0	130.0
36"		117.4	130.0	130.0	130.0	130.0	130.0	130.0
40"		105.7	130.0	130.0	130.0	130.0	130.0	130.0
44"		96.1	130.0	130.0	130.0	130.0	130.0	130.0
45"		93.9	130.0	130.0	130.0	130.0	130.0	130.0
48"		88.1	123.3	130.0	130.0	130.0	130.0	130.0
52"		81.3	113.8	130.0	130.0	130.0	130.0	130.0
56"		75.5	105.7	130.0	130.0	130.0	130.0	130.0
60"		70.5	98.6	126.8	121.8	130.0	130.0	130.0
32"	84"	122.7	130.0	130.0	130.0	130.0	130.0	130.0
36"		109.0	130.0	130.0	130.0	130.0	130.0	130.0
40"		98.1	130.0	130.0	130.0	130.0	130.0	130.0
44"		89.2	124.9	130.0	130.0	130.0	130.0	130.0
45"		87.2	122.1	130.0	130.0	130.0	130.0	130.0
48"		81.8	114.5	130.0	130.0	130.0	130.0	130.0
52"		75.5	105.7	130.0	130.0	130.0	130.0	130.0
56"		70.1	98.1	126.2	121.2	130.0	130.0	130.0
60"		65.4	91.6	117.8	113.1	130.0	130.0	130.0
32"	90"	114.5	130.0	130.0	130.0	130.0	130.0	130.0
36"		101.8	130.0	130.0	130.0	130.0	130.0	130.0
40"		91.6	128.2	130.0	130.0	130.0	130.0	130.0
44"		83.3	116.6	130.0	130.0	130.0	130.0	130.0
45"		81.4	114.0	130.0	130.0	130.0	130.0	130.0
48"		76.3	106.9	130.0	130.0	130.0	130.0	130.0
52"		70.5	98.6	126.8	121.8	130.0	130.0	130.0
56"		65.4	91.6	117.8	113.1	130.0	130.0	130.0
60"		61.1	85.5	109.9	105.5	130.0	127.7	130.0
32"	96"	107.3	130.0	130.0	130.0	130.0	130.0	130.0
36"		95.4	130.0	130.0	130.0	130.0	130.0	130.0
40"		85.9	120.2	130.0	130.0	130.0	130.0	130.0
44"		78.1	109.3	130.0	130.0	130.0	130.0	130.0
45"		76.3	106.9	130.0	130.0	130.0	130.0	130.0
48"		71.6	100.2	128.8	123.7	130.0	130.0	130.0
52"		66.1	92.5	118.9	114.2	130.0	130.0	130.0
56"		61.3	85.9	110.4	106.0	130.0	128.3	130.0
60"		57.3	80.2	103.1	99.0	130.0	119.8	130.0
32"	102"	101.0	130.0	130.0	130.0	130.0	130.0	130.0
36"		89.8	125.7	130.0	130.0	130.0	130.0	130.0
40"		80.8	113.2	130.0	130.0	130.0	130.0	130.0
44"		73.5	102.9	130.0	127.0	130.0	130.0	130.0
45"		71.8	100.6	129.3	124.2	130.0	130.0	130.0
48"		67.4	94.3	121.2	116.4	130.0	130.0	130.0
52"		62.2	87.0	111.9	107.5	130.0	130.0	130.0
56"		57.7	80.8	103.9	99.8	130.0	120.8	130.0

ANCHOR LOAD CAPACITY – PSF
EXT.(+) & INT.(–)

NOMINAL DIMS.		ANCHORS TYPE 'A'			ANCHORS TYPE 'B'		ANCHORS TYPE 'C'	
WIDTH (W)	FRAME HEIGHT	A2	A3	A4	B2	B3	C2	C3
32"	108"	95.4	130.0	130.0	130.0	130.0	130.0	130.0
36"		84.8	118.7	130.0	130.0	130.0	130.0	130.0
40"		76.3	106.9	130.0	130.0	130.0	130.0	130.0
44"		69.4	97.2	124.9	119.9	130.0	130.0	130.0
45"		67.9	95.0	122.1	117.3	130.0	130.0	130.0
48"		63.6	89.1	114.5	109.9	130.0	130.0	130.0
52"		58.7	82.2	105.7	101.5	130.0	122.8	130.0
32"	114"	90.4	126.6	130.0	130.0	130.0	130.0	130.0
36"		80.4	112.5	130.0	130.0	130.0	130.0	130.0
40"		72.3	101.2	130.0	125.0	130.0	130.0	130.0
44"		65.7	92.0	118.3	113.6	130.0	130.0	130.0
45"		64.3	90.0	115.7	111.1	130.0	130.0	130.0
48"		60.3	84.4	108.5	104.2	130.0	126.1	130.0
32"	120"	85.9	120.2	130.0	130.0	130.0	130.0	130.0
36"		76.3	106.9	130.0	130.0	130.0	130.0	130.0
40"		68.7	96.2	123.7	118.7	130.0	130.0	130.0
44"		62.5	87.4	112.4	107.9	130.0	130.0	130.0
45"		61.1	85.5	109.9	105.5	130.0	127.7	130.0
48"		57.3	80.2	103.1	99.0	130.0	119.8	130.0

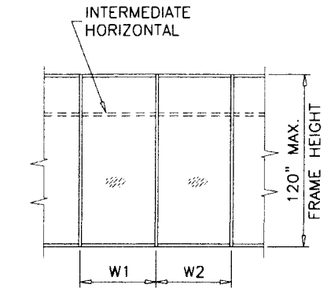

$$\text{WIDTH (W)} = \frac{W1 + W2}{2} \text{ (MULLION)}$$

ANCHORS TYPES: SEE SHEET 5 FOR DESCRIPTION

A2 = (2) ANCHORS TYPE 'A' AT EACH SIDE OF MULLION
B2 = (2) ANCHORS TYPE 'B' AT EACH SIDE OF MULLION
C2 = (2) ANCHORS TYPE 'C' AT EACH SIDE OF MULLION

A3 = (3) ANCHORS TYPE 'A' AT EACH SIDE OF MULLION
B3 = (3) ANCHORS TYPE 'B' AT EACH SIDE OF MULLION
C3 = (3) ANCHORS TYPE 'C' AT EACH SIDE OF MULLION

A4 = (4) ANCHORS TYPE 'A' AT EACH SIDE OF MULLION

ALL OTHER ANCHORS TO BE SPACED AS PER ELEVATION.

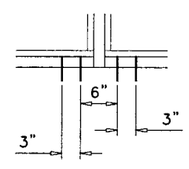

A2, B2, C2

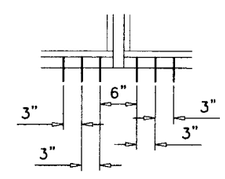

A3, B3, C3

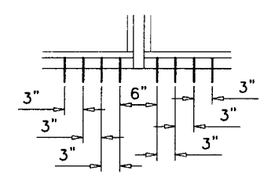

A4

PRODUCT REVISED
as complying with the Florida
Buiding Code
Acceptance No. 10-0308.02
Expiration Date MAY 20, 2014
By Ishang L. Chan
Miami Dade Product Control
Division

Engr: JAVAD AHMAD
CIVIL
FLA. PE # 70592
C.A.N. 3538

JUN 18 2010

AL-FAROOQ CORPORATION
ENGINEERS & PRODUCT DEVELOPMENT
1235 S.W. 87 AVE
MIAMI, FLORIDA 33174
TEL. (305) 264-8100 FAX. (305) 262-6978

STORE\02-27DD

DHS-500 ALUM WINDOW WALL STOREFRONT SYS.

DELTA DOORS
7500 N.W. 69TH AVE.
MIAMI, FL 33166
TEL. (305) 888-0077 FAX. (305) 884-3111

revisions:

no	date	by	description
A	12.28.05		CHARTS REV.
B	02.26.08		REV. PER BCCO COMMENTS
C	08.06.08		NO CHANGE THIS SHEET
D	11.16.09		NO CHNAGE THIS SHEET
E	06.15.10		REV. PER BCCO COMMENTS

date: 03-29-02
scale: 1/2" = 1"
dr. by: HAMID
chk. by:

drawing no.
W02-27

DOOR MULLION LOAD CAPACITY-PSF

WIDTH (W) INCHES	FRAME HEIGHT INCHES	WITHOUT REINF. EXT. (+) INT. (−)	LIGHT REINF. EXT. (+) INT. (−)	MEDIUM REINF. EXT. (+) INT. (−)	HEAVY REINF. EXT. (+) INT. (−)
30	82	75.0	100.0	100.0	100.0
33		75.0	100.0	100.0	100.0
36		75.0	100.0	100.0	100.0
39		75.0	100.0	100.0	100.0
42		75.0	100.0	100.0	100.0
45		75.0	100.0	100.0	100.0
48		75.0	100.0	100.0	100.0
51		75.0	100.0	100.0	100.0
54		75.0	100.0	100.0	100.0
57		75.0	100.0	100.0	100.0
60		74.5	95.9	100.0	100.0
30	86	75.0	100.0	100.0	100.0
33		75.0	100.0	100.0	100.0
36		75.0	100.0	100.0	100.0
39		75.0	100.0	100.0	100.0
42		75.0	100.0	100.0	100.0
45		75.0	100.0	100.0	100.0
48		75.0	100.0	100.0	100.0
51		75.0	100.0	100.0	100.0
54		74.7	96.9	100.0	100.0
57		70.8	91.8	100.0	100.0
60		–	87.2	100.0	100.0
30	92	75.0	100.0	100.0	100.0
33		75.0	100.0	100.0	100.0
36		75.0	100.0	100.0	100.0
39		75.0	100.0	100.0	100.0
42		75.0	100.0	100.0	100.0
45		75.0	100.0	100.0	100.0
48		72.8	95.3	100.0	100.0
51		68.5	89.7	100.0	100.0
54		64.7	84.7	100.0	100.0
57		–	80.2	100.0	100.0
60		–	76.5	100.0	100.0
30	98	75.0	100.0	100.0	100.0
33		75.0	100.0	100.0	100.0
36		75.0	100.0	100.0	100.0
39		75.0	100.0	100.0	100.0
42		72.7	95.9	100.0	100.0
45		67.8	89.5	100.0	100.0
48		63.6	83.9	100.0	100.0
51		59.8	79.0	100.0	100.0
54		–	74.6	100.0	100.0
57		–	70.7	96.7	100.0
60		–	67.2	91.9	100.0
30	104	75.0	100.0	100.0	100.0
33		75.0	100.0	100.0	100.0
36		74.6	99.4	100.0	100.0
39		68.9	91.7	100.0	100.0
42		64.0	85.2	100.0	100.0
45		59.7	79.5	100.0	100.0
48		56.0	74.5	100.0	100.0
51		–	70.2	96.0	100.0
54		–	66.3	90.7	100.0
57		–	62.8	85.9	100.0
60		–	59.6	81.6	100.0

DOOR MULLION LOAD CAPACITY-PSF

WIDTH (W) INCHES	FRAME HEIGHT INCHES	WITHOUT REINF. EXT. (+) INT. (−)	LIGHT REINF. EXT. (+) INT. (−)	MEDIUM REINF. EXT. (+) INT. (−)	HEAVY REINF. EXT. (+) INT. (−)
30	110	75.0	100.0	100.0	100.0
33		69.7	96.9	100.0	100.0
36		63.9	88.8	100.0	100.0
39		59.0	82.0	100.0	100.0
42		54.8	76.1	100.0	100.0
45		51.1	71.1	97.2	100.0
48		–	66.6	91.2	100.0
51		–	62.7	85.8	100.0
54		–	59.2	81.0	100.0
57		–	56.1	76.8	97.6
60		–	53.3	72.9	92.7
30	116	–	95.9	100.0	100.0
33		–	87.1	100.0	100.0
36		–	79.9	100.0	100.0
39		–	73.7	100.0	100.0
42		–	68.5	93.7	100.0
45		–	63.9	87.4	100.0
48		–	59.9	82.0	100.0
51		–	56.4	77.2	98.1
54		–	53.3	72.9	92.6
57		–	50.5	69.0	87.7
60		–	47.9	65.6	83.4
30	120	–	89.6	100.0	100.0
33		–	81.4	100.0	100.0
36		–	74.7	100.0	100.0
39		–	68.9	94.3	100.0
42		–	64.0	87.6	100.0
45		–	59.7	81.7	100.0
48		–	56.0	76.6	97.4
51		–	52.7	72.1	91.6
54		–	49.8	68.1	86.6
57		–	47.1	64.5	82.0
60		–	44.8	61.3	77.9

SUBSTRATE	TOTAL NO. OF ANCHORS AT DOOR MULLION HEAD			
	WITHOUT REINF.	LIGHT REINF.	MEDIUM REINF.	HEAVY REINF.
WOOD	6	7	9	10
CONCRETE	4	5	5	6
METAL	4	4	4	5

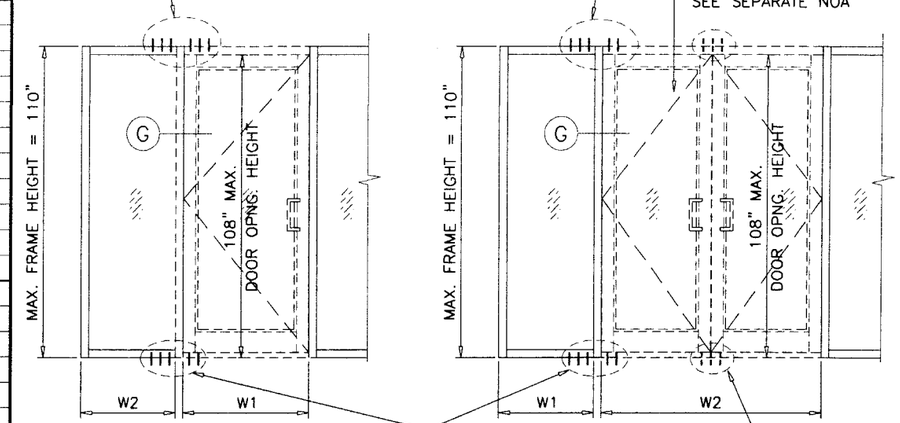

$$\text{WIDTH (W)} = \frac{W1 + W2}{2}$$

$$\text{WIDTH (W)} = \frac{W1}{2} + \frac{W2}{4}$$

SUBSTRATE	TOTAL NO. OF ANCHORS AT DOOR MULLION SILL			
	WITHOUT REINF.	LIGHT REINF.	MEDIUM REINF.	HEAVY REINF.
CONCRETE	4	5	5	6

SUBSTRATE	TOTAL NO. OF ANCHORS AT DOOR MULLION HEAD			
	WITHOUT REINF.	LIGHT REINF.	MEDIUM REINF.	HEAVY REINF.
WOOD	6	7	9	10
CONCRETE	4	5	5	6
METAL	4	4	4	5

PRODUCT REVISED
as complying with the Florida Building Code
Acceptance No 10-0308.02
Expiration Date MAY 20, 2014
By Ishaq I. Chanda
Miami Dade Product Control Division

SUBSTRATE	TOTAL NO. OF ANCHORS AT DOOR MULLION SILL			
	WITHOUT REINF.	LIGHT REINF.	MEDIUM REINF.	HEAVY REINF.
CONCRETE	4	5	5	6

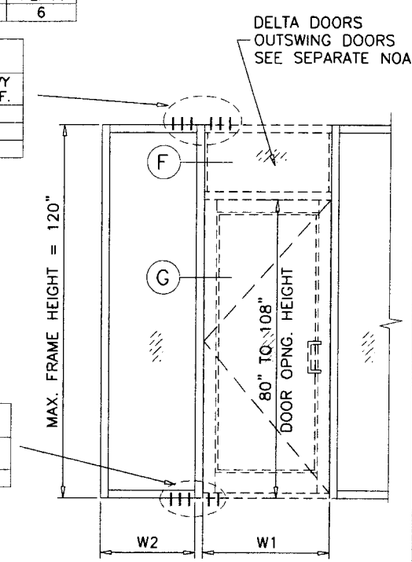

$$\text{WIDTH (W)} = \frac{W1 + W2}{2}$$

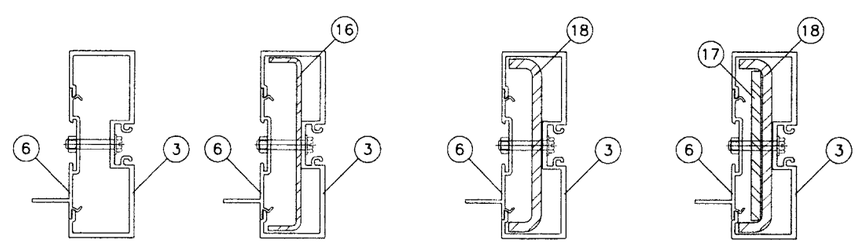

WITHOUT REINF. LIGHT REINF. MEDIUM REINF. HEAVY REINF.

STEEL REINFORCING LENGTHS = FRAME HEIGHTS

Engr: JAVAD AHMAD
CIVIL
FLA. PE # 70592
C.A.N. 3538
JUN 18 2010

AL-FAROOQ CORPORATION
ENGINEERS & PRODUCT DEVELOPMENT
1235 S.W. 87 AVE
MIAMI, FLORIDA 33174
TEL. (305) 264-8100 FAX. (305) 262-6978

STORE\02-27DD

DHS-500 ALUM WINDOW WALL STOREFRONT SYS.

DELTA DOORS
7500 N.W. 69TH AVE.
MIAMI, FL 33166
TEL. (305) 888-0077 FAX. (305) 884-3111

revisions:

no	date	by	description
B	02.26.08		REV. PER BCCO COMMENTS
C	08.06.08		NO CHANGE THIS SHEET
D	11.16.09		NO CHNAGE THIS SHEET
E	06.15.10		REV. PER BCCO COMMENTS

date: 03-29-02
scale: 1/2" = 1"
dr. by: HAMID
chk. by:

drawing no.
W02-27

DOOR MULLION LOAD CAPACITY - PSF

NOMINAL DIMS.			LIGHT REINF.	MEDIUM REINF.	HEAVY REINF.
FRAME HEIGHT INCHES	WIDTH (W1) INCHES	WIDTH (W2) INCHES	EXT. (+) INT. (-)	EXT. (+) INT. (-)	EXT. (+) INT. (-)
90	60	46-1/4	100.0	100.0	100.0
		52-1/4	100.0	100.0	100.0
		58-1/4	97.1	100.0	100.0
		64-1/4	91.5	100.0	100.0
	64	46-1/4	100.0	100.0	100.0
		52-1/4	100.0	100.0	100.0
		58-1/4	94.7	100.0	100.0
		64-1/4	89.4	100.0	100.0
	72	46-1/4	100.0	100.0	100.0
		52-1/4	95.7	100.0	100.0
		58-1/4	90.3	100.0	100.0
		64-1/4	85.4	100.0	100.0
	84	46-1/4	94.3	100.0	100.0
		52-1/4	89.1	100.0	100.0
		58-1/4	84.4	100.0	100.0
		64-1/4	80.1	100.0	100.0
96	60	46-1/4	93.3	100.0	100.0
		52-1/4	87.5	100.0	100.0
		58-1/4	82.4	100.0	100.0
		64-1/4	77.8	100.0	100.0
	64	46-1/4	90.6	100.0	100.0
		52-1/4	85.1	100.0	100.0
		58-1/4	80.2	100.0	100.0
		64-1/4	75.9	100.0	100.0
	72	46-1/4	85.6	100.0	100.0
		52-1/4	80.7	100.0	100.0
		58-1/4	76.3	100.0	100.0
		64-1/4	72.4	99.0	100.0
	84	46-1/4	79.1	100.0	100.0
		52-1/4	74.8	100.0	100.0
		58-1/4	71.1	97.2	100.0
		64-1/4	67.6	92.6	100.0
102	60	46-1/4	79.8	100.0	100.0
		52-1/4	75.0	100.0	100.0
		58-1/4	70.8	96.9	100.0
		64-1/4	67.0	91.6	100.0
	64	46-1/4	77.4	100.0	100.0
		52-1/4	72.9	99.7	100.0
		58-1/4	68.9	94.2	100.0
		64-1/4	65.3	89.3	100.0
	72	46-1/4	73.0	99.9	100.0
		52-1/4	68.9	94.3	100.0
		58-1/4	65.3	89.4	100.0
		64-1/4	62.1	85.0	100.0
	84	46-1/4	67.2	91.9	100.0
		52-1/4	63.8	87.3	100.0
		58-1/4	60.7	83.0	100.0
		64-1/4	57.9	79.2	100.0

DOOR MULLION LOAD CAPACITY - PSF

NOMINAL DIMS.			LIGHT REINF.	MEDIUM REINF.	HEAVY REINF.
FRAME HEIGHT INCHES	WIDTH (W1) INCHES	WIDTH (W2) INCHES	EXT. (+) INT. (-)	EXT. (+) INT. (-)	EXT. (+) INT. (-)
108	60	46-1/4	69.1	94.5	100.0
		52-1/4	65.1	89.0	100.0
		58-1/4	61.5	84.1	100.0
		64-1/4	58.3	79.7	100.0
	64	46-1/4	66.9	91.5	100.0
		52-1/4	63.1	86.4	100.0
		58-1/4	59.8	81.8	100.0
		64-1/4	56.7	77.6	98.6
	72	46-1/4	63.0	86.1	100.0
		52-1/4	59.6	81.5	100.0
		58-1/4	56.6	77.4	98.4
		64-1/4	53.9	73.7	93.7
	84	46-1/4	57.8	79.1	100.0
		52-1/4	55.0	75.2	95.6
		58-1/4	52.4	71.7	91.2
114	60	46-1/4	60.4	82.6	100.0
		52-1/4	57.0	77.9	99.1
		58-1/4	53.9	73.8	93.8
		64-1/4	51.1	70.0	88.9
	64	46-1/4	58.4	80.0	100.0
		52-1/4	55.2	75.6	96.0
		58-1/4	52.3	71.6	91.0
		64-1/4	49.7	68.1	86.5
	72	46-1/4	54.9	75.1	95.4
		52-1/4	52.0	71.2	90.5
		58-1/4	49.5	67.7	86.0
		64-1/4	47.2	64.5	82.0
	84	46-1/4	50.3	68.8	87.4
		52-1/4	47.9	65.5	83.3
120	60	46-1/4	53.2	72.8	92.6
		52-1/4	50.3	68.8	87.4
		58-1/4	47.7	65.2	82.9
		64-1/4	45.3	61.9	78.7
	64	46-1/4	51.5	70.4	89.5
		52-1/4	48.7	66.6	84.7
		58-1/4	46.2	63.3	80.4
		64-1/4	44.0	60.2	76.5
	72	46-1/4	48.2	66.0	83.9
		52-1/4	45.8	62.7	79.7
		58-1/4	43.6	59.7	75.9
	84	46-1/4	44.1	60.3	76.7

	TOTAL NO. OF ANCHORS REQD. AT DOOR MULLION HEAD			
	UPTO 75 PSF		UPTO 100 PSF	
SUBSTRATE	NO. AT TRANSOM	NO. AT FIX. LITE	NO. AT TRANSOM	NO. AT FIX. LITE
WOOD	4	5	6	6
CONCRETE	3	3	3	4
METAL	2	3	3	3

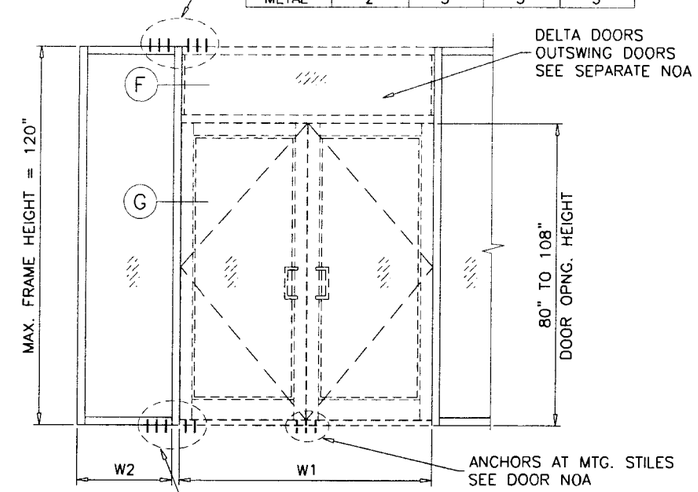

	TOTAL NO. OF ANCHORS REQD. AT DOOR MULLION SILL			
	UPTO 75 PSF		UPTO 100 PSF	
SUBSTRATE	NO. AT DOOR	NO. AT FIX. LITE	NO. AT DOOR	NO. AT FIX. LITE
CONCRETE	2	3	2	4

PRODUCT REVISED
as complying with the Florida
Building Code
Acceptance No 10-0308.02
Expiration Date MAY 20, 2014
By Ishag I. Chanda
Miami Dade Product Control
Division

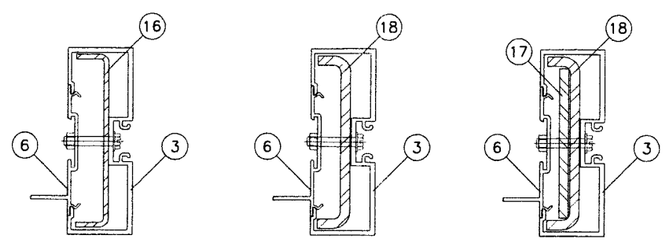

LIGHT REINF. MEDIUM REINF. HEAVY REINF.

STEEL REINFORCING LENGTHS = FRAME HEIGHTS

Engr: JAVAD AHMAD
CIVIL
FLA. PE # 70592
C.A.N. 3538

JUN 18 2010

AL-FAROOQ CORPORATION
ENGINEERS & PRODUCT DEVELOPMENT
1235 S.W. 87 AVE
MIAMI, FLORIDA 33174
TEL. (305) 264-8100 FAX. (305) 262-6978

STORE\02-27DD

DHS-500 ALUM. WINDOW WALL STOREFRONT SYS.

DELTA DOORS
7500 N.W. 69TH AVE.
MIAMI, FL 33166
TEL. (305) 888-0077 FAX. (305) 884-3111

revisions:

no	date	by	description
B	02.26.08		REV. PER BCCO COMMENTS
C	08.06.08		NO CHANGE THIS SHEET
D	11.16.09		NO CHNAGE THIS SHEET
E	06.15.10		REV. PER BCCO COMMENTS

date: 03-29-02
scale: 1/2" = 1"
dr. by: HAMID
chk. by:

drawing no.
W02-27

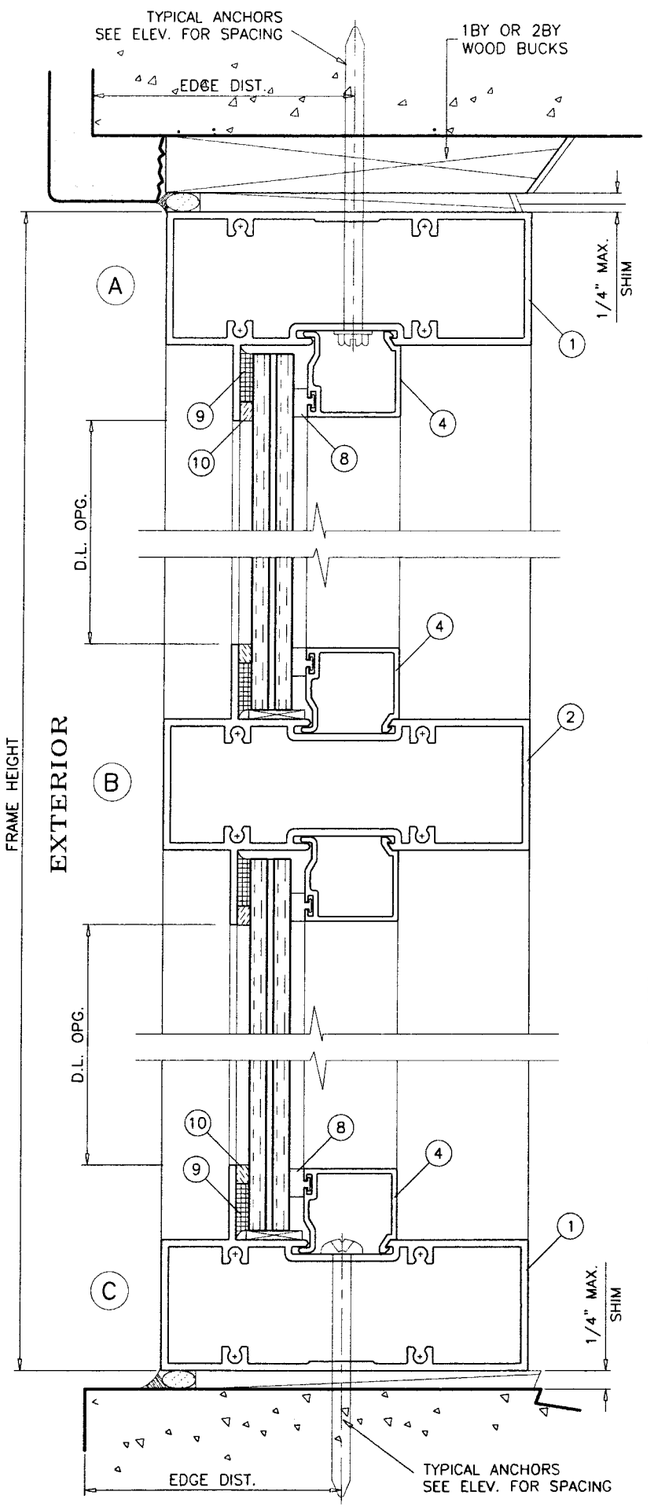

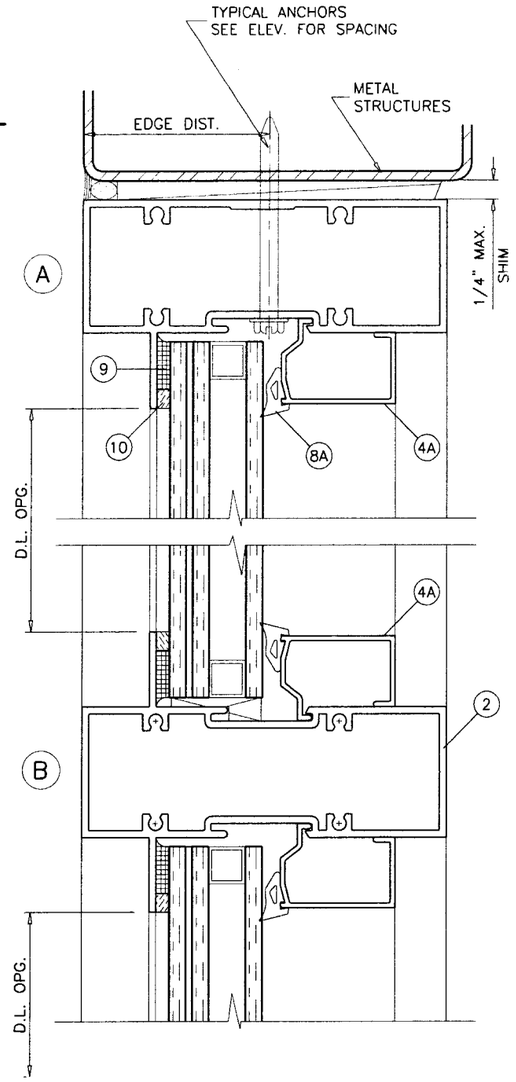

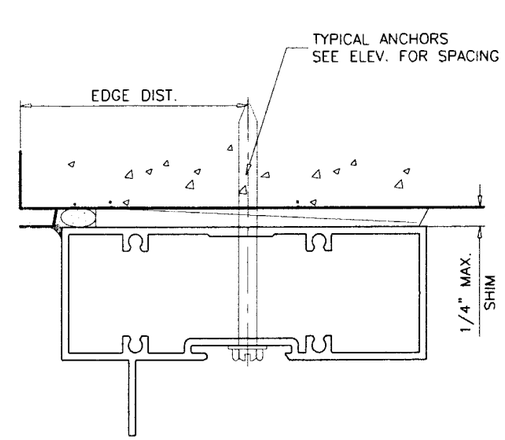

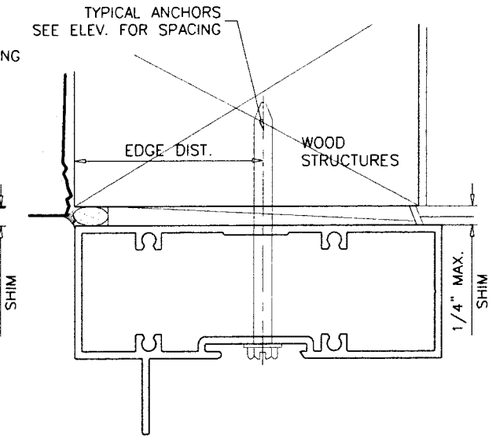

PRODUCT REVISED
as complying with the Florida
Building Code
Acceptance No. 10-0308.02
Expiration Date MAY 20, 2014
By Ishaq I. Chanda
Miami Dade Product Control
Division

WOOD BUCKS AND METAL STRUCTURES NOT BY DELTA DOORS MUST SUPPORT LOADS IMPOSED BY GLAZING SYSTEM AND TRANSFER THEM TO THE BUILDING STRUCTURE.

TYPICAL ANCHORS: SEE ELEV. FOR SPACING

TYPE 'A'– 1/4" DIA. ULTRACON BY 'ELCO' (Fu=177 KSI, Fy=155 KSI)
INTO 2BY WOOD BUCKS OR WOOD STRUCTURES
1-3/8" MIN. PENETRATION INTO WOOD

THRU 1BY BUCKS INTO CONC. OR MASONRY
1-1/4" MIN. EMBED INTO CONC. OR MASONRY

TYPE 'B'– 1/4" DIA. ULTRACON BY 'ELCO'
DIRECTLY INTO CONC. OR MASONRY
1-3/8" MIN. EMBED INTO CONC. OR MASONRY

TYPE 'C'– #14 SMS OR SELF DRILLING SCREWS (GRADE 2 CRS)
INTO METAL STRUCTURES
STEEL : 12 GA. MIN. (Fy = 36 KSI MIN.)
ALUMINUM : 1/8" THK. MIN. (6063-T5 MIN.)
(STEEL IN CONTACT WITH ALUMINUM TO BE PLATED OR PAINTED)

TYPICAL EDGE DISTANCE
INTO CONCRETE AND MASONRY = 2-1/2" MIN.
INTO WOOD STRUCTURE = 1" MIN.
INTO METAL STRUCTURE = 3/4" MIN.

CONCRETE AT HEAD, SILL OR JAMBS f'c = 3000 PSI MIN.
C-90 HOLLOW/FILLED BLOCK AT JAMBS f'm = 2000 PSI MIN.

Engr: JAVAD AHMAD
CIVIL
FLA. PE # 70592
C.A.N. 3538
JUN 18 2010

AL-FAROOQ CORPORATION
ENGINEERS & PRODUCT DEVELOPMENT
1235 S.W. 87 AVE
MIAMI, FLORIDA 33174
TEL. (305) 264-8100 FAX. (305) 262-6978

STORE\02-27DD

DHS-500 ALUM WINDOW WALL STOREFRONT SYS.

DELTA DOORS
7500 N.W. 69TH AVE.
MIAMI, FL 33166
TEL. (305) 888-0077 FAX. (305) 884-3111

revisions:

no	date	by	description
A	12.28.05		ANCHORS REV.
B	02.26.08		REV. PER BCCO COMMENTS
C	08.06.08		NO CHANGE THIS SHEET
D	11.16.09		LAM. INSUL. GLASS ADDED
E	06.15.10		REV. PER BCCO COMMENTS

date: 03-29-02
scale: 1/2" = 1"
dr. by: HAMID
chk. by:

drawing no.
W02-27

sheet 7 of 11

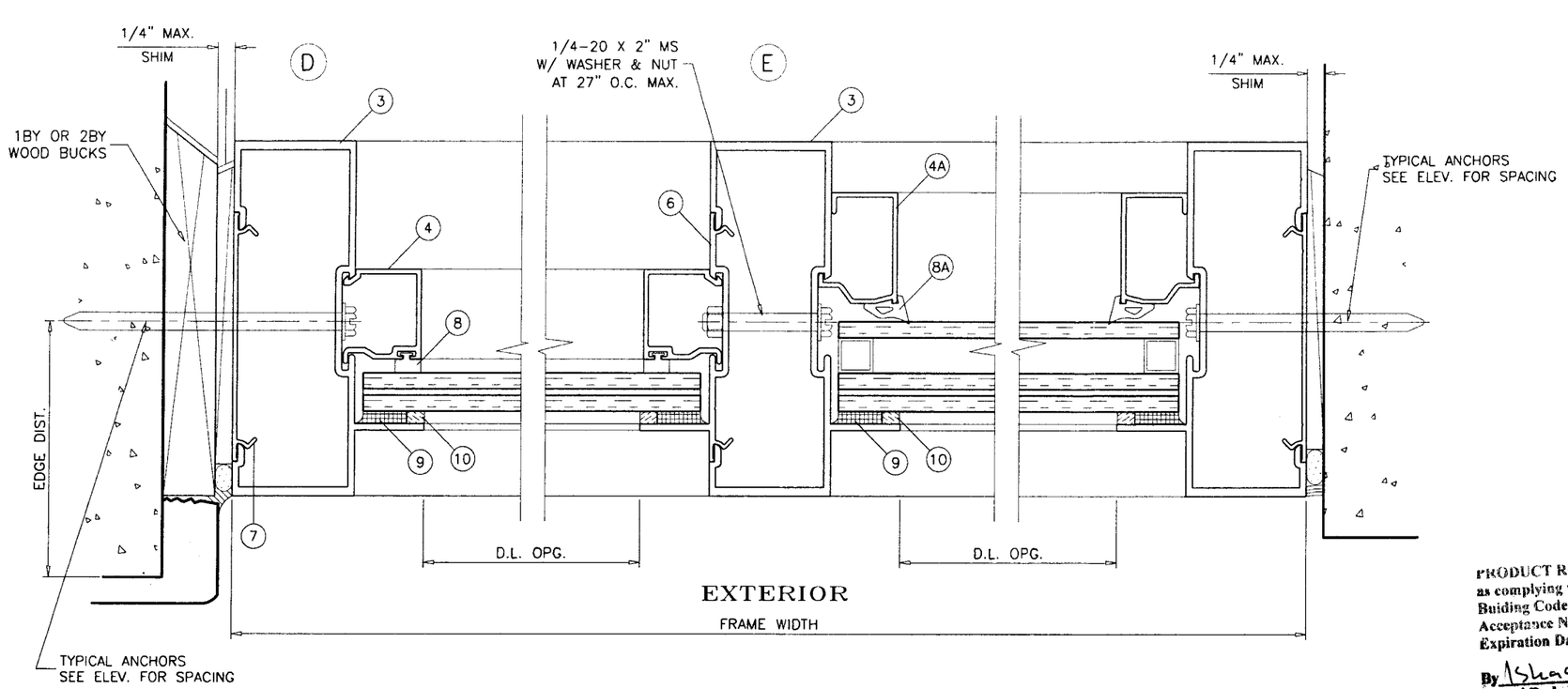

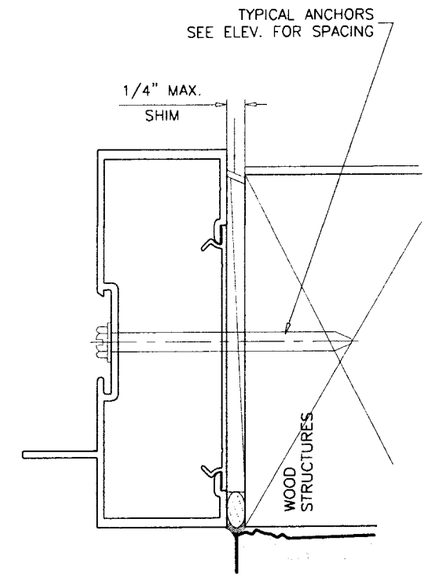

PRODUCT REVISED
as complying with the Florida
Buiding Code
Acceptance No 10-0308.02
Expiration Date MAY 20, 2014
By Ishaq I. Chanda
Miami Dade Product Control
Division

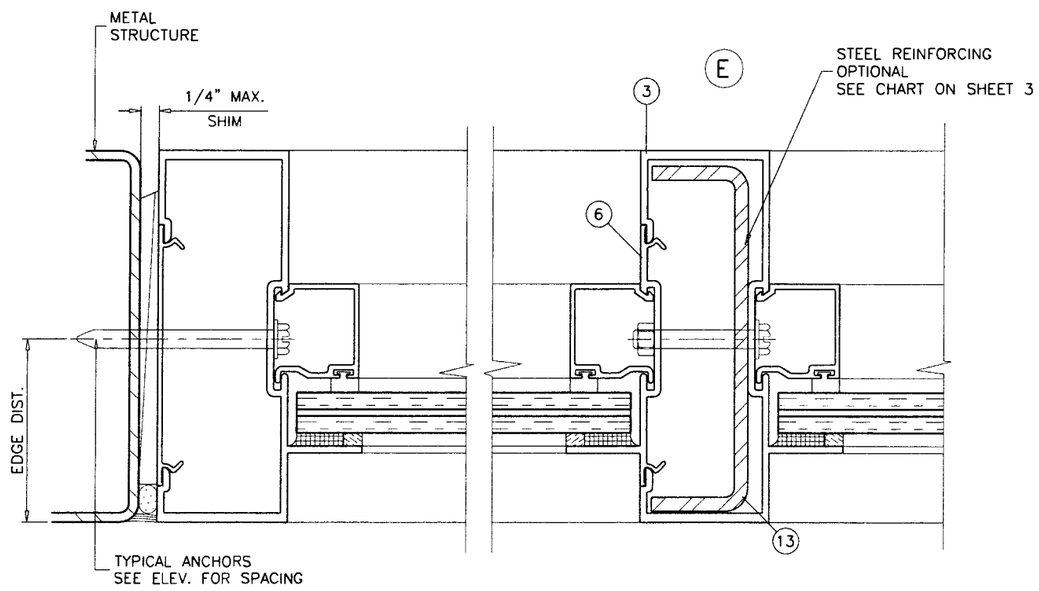

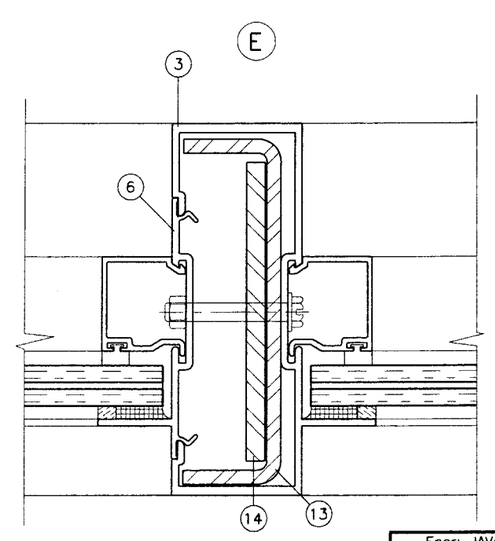

Engr: JAVAD AHMAD
CIVIL
FLA. PE # 70592
C.A.N. 3538

JUN 18 2010

AL-FAROOQ CORPORATION
ENGINEERS & PRODUCT DEVELOPMENT
1235 S.W. 87 AVE
MIAMI, FLORIDA 33174
TEL. (305) 264-8100 FAX. (305) 262-6978

STORE\02-27DD

DHS-500 ALUM WINDOW WALL STOREFRONT SYS.

DELTA DOORS
7500 N.W. 69TH AVE.
MIAMI, FL 33166
TEL. (305) 888-0077 FAX. (305) 884-3111

revisions:

no	date	by	description
A	12.28.05		STEEL REINF. REV.
B	02.26.08		REV. PER BCCO COMMENTS
C	08.06.08		NO CHANGE THIS SHEET
D	11.16.09		LAM. INSUL. GLASS ADDED
E	06.15.10		REV. PER BCCO COMMENTS

date: 03-29-02
scale: 1/2" = 1"
dr. by: HAMID
chk. by:

drawing no.
W02-27

sheet 8 of 11

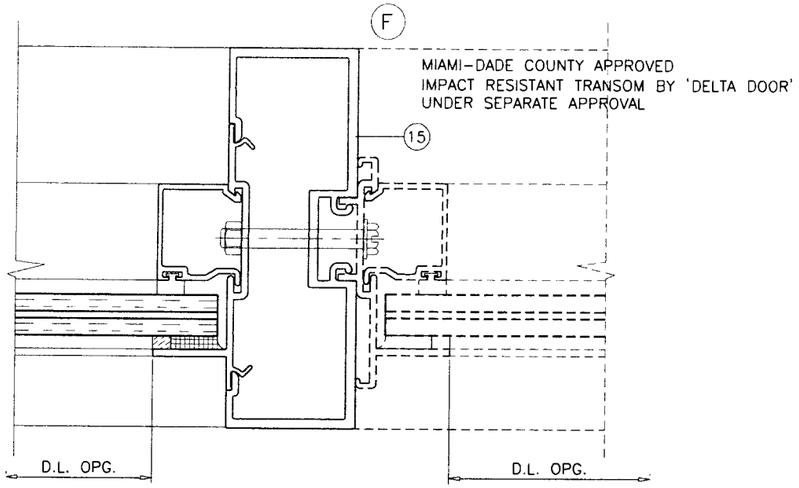

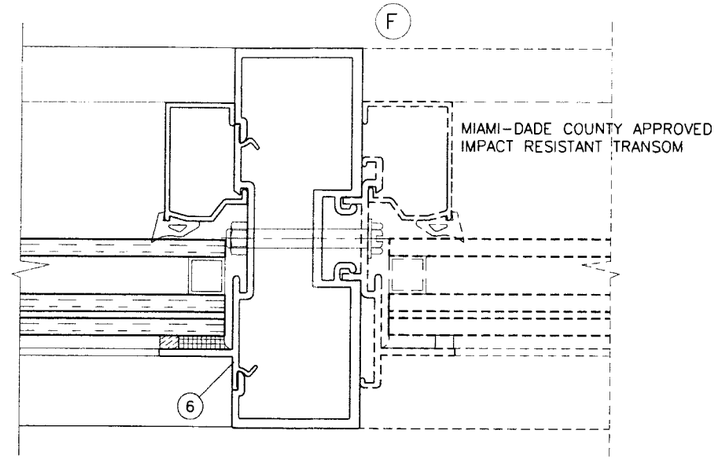

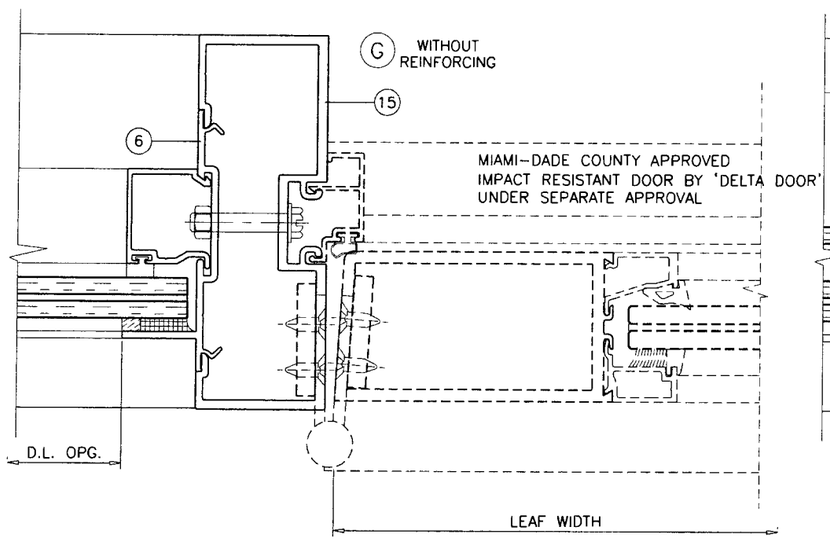

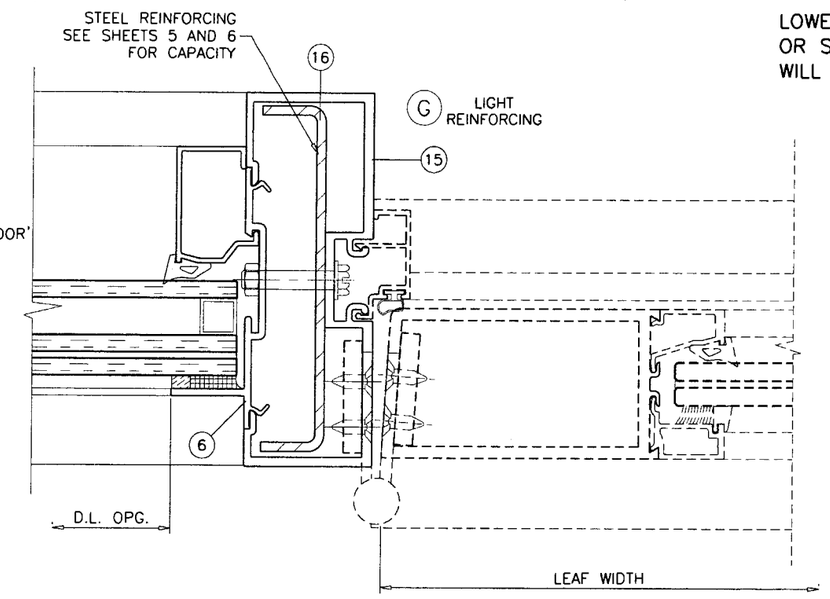

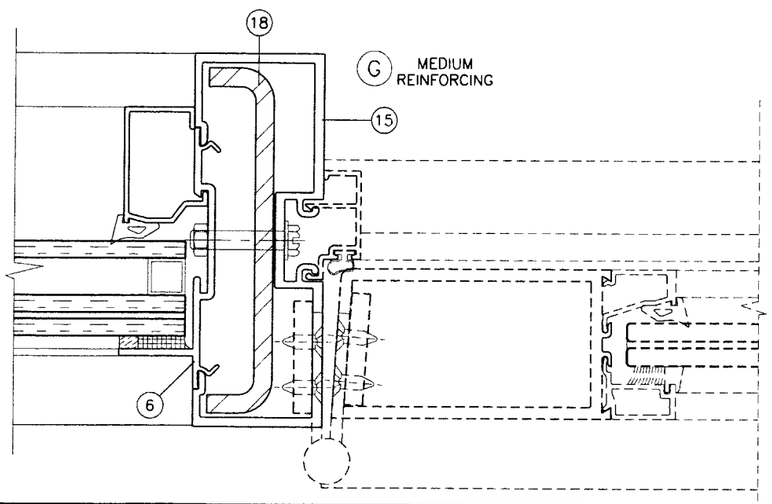

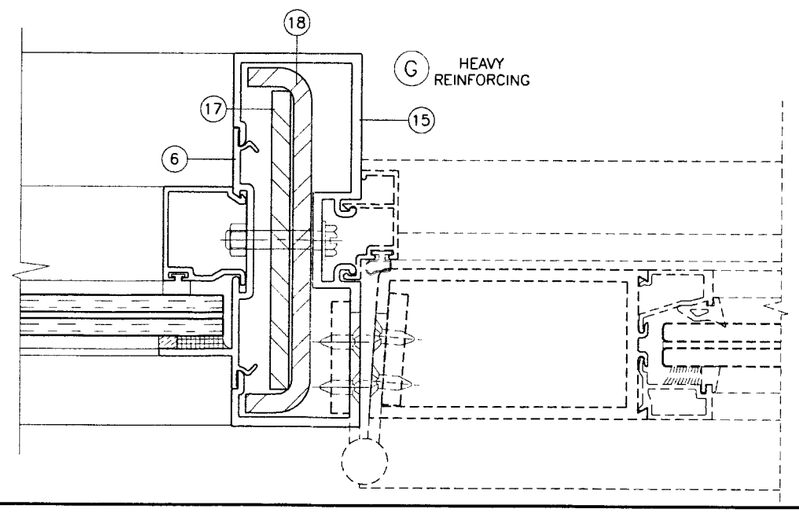

SEE SEPARATE 'DELTA' NOA FOR DESIGN LOAD CAPACITY OF DOORS AND DOOR ANCHORS.

LOWER VALUES FROM DOORS NOA OR STOREFRONT SYSTEM CAPACITY CHARTS WILL APPLY TO ENTIRE SYSTEM.

PRODUCT REVISED
as complying with the Florida
Building Code
Acceptance No 10-0308.02
Expiration Date MAY 20, 2014
By Ishaq I. Chanda
Miami Dade Product Control

Engr: JAVAD AHMAD
CIVIL
FLA. PE # 70592
C.A.N. 3538

JUN 18 2010

AL-FAROOQ CORPORATION
ENGINEERS & PROJECT DEVELOPMENT
1235 S.W. 87 AVE
MIAMI, FLORIDA 33174
TEL. (305) 264-8100 FAX. (305) 262-6978
STORE\02-27DD

DHS-500 ALUM WINDOW WALL STOREFRONT SYS.

DELTA DOORS
7500 N.W. 69TH AVE.
MIAMI, FL 33166
TEL. (305) 888-0077 FAX. (305) 884-3111

revisions:

no	date	by	description
B	02.26.08		REV. PER BCCO COMMENTS
C	08.06.08		NO CHANGE THIS SHEET
D	11.16.09		LAM. INSUL. GLASS ADDED
E	06.15.10		REV. PER BCCO COMMENTS

date: 03-29-02
scale: 1/2" = 1"
dr. by: HAMID
chk. by:

drawing no.
W02-27

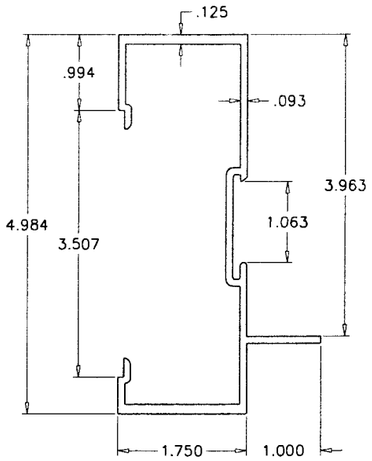

3 FRAME JAMB/MULLION

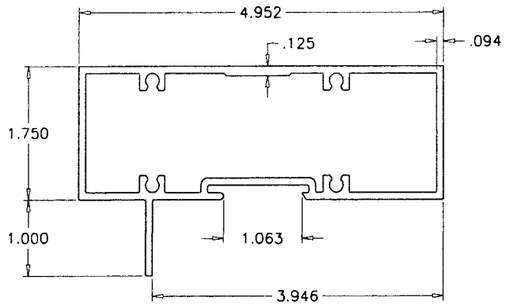

1 FRAME HEAD/SILL

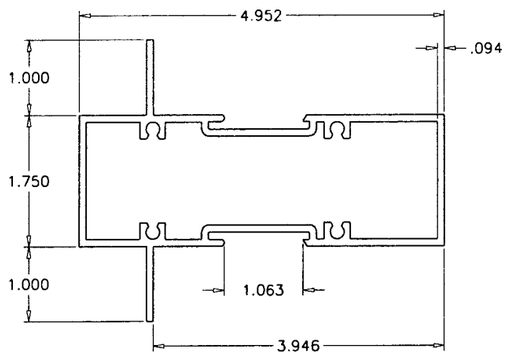

2 FRAME HORIZONTAL

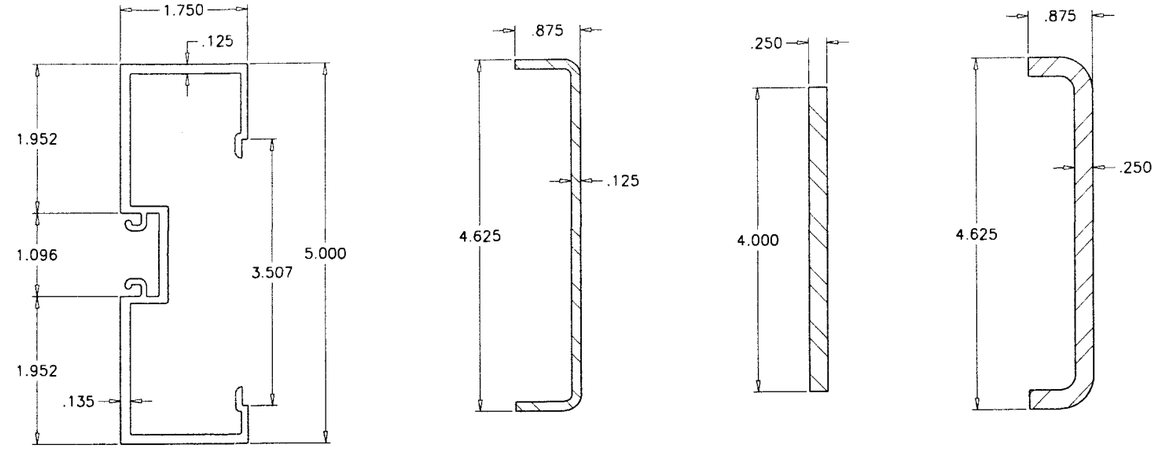

15 DOOR MULLION

16 DOOR MULL REINF. CHANNEL LIGHT

17 DOOR MULL REINF. BAR HEAVY

18 DOOR MULL REINF. CHANNEL MEDIUM/HEAVY

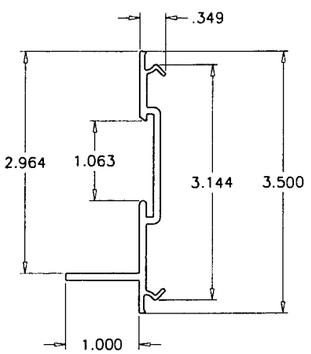

6 POCKET FILLER

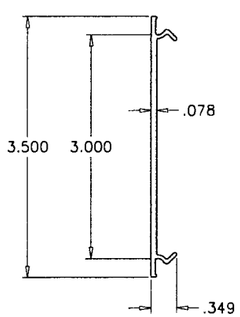

7 SNAP IN COVER

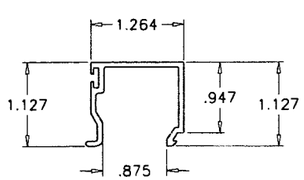

4 GLAZING STOP (LAM. GLASS)

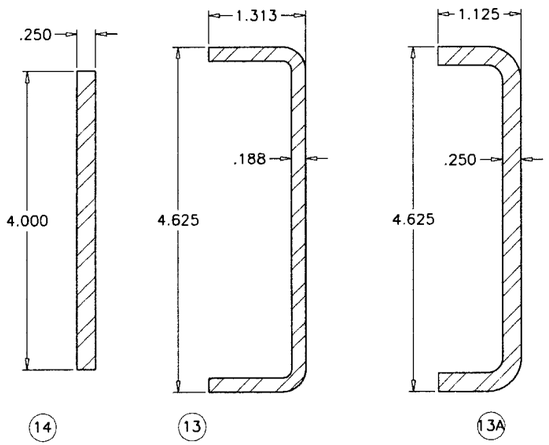

14 13 13A

STOREFRONT MULLION
STEEL REINFORCING
36 KSI MIN.

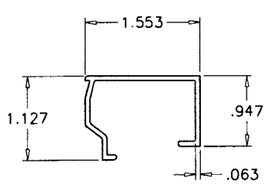

4A GLAZING STOP (LAM. INSUL. GLASS)

PRODUCT REVISED
as complying with the Florida Building Code
Acceptance No 10-0308.02
Expiration Date MAY 20, 2014
By Ichang I. Thanh
Miami Dade Product Control Division

Engr: JAVAD AHMAD
CIVIL
FLA. PE # 70592
C.A.N. 3538

JUN 18 2010

AL-FAROOQ CORPORATION
ENGINEERS & PRODUCT DEVELOPMENT
1235 S.W. 87 AVE
MIAMI, FLORIDA 33174
TEL. (305) 264-8100 FAX. (305) 262-6978

STORE\02-27DD

DHS-500 ALUM WINDOW WALL STOREFRONT SYS.

DELTA DOORS
7500 N.W. 69TH AVE.
MIAMI, FL 33166
TEL. (305) 888-0077 FAX. (305) 884-3111

revisions:

no	date	by	description
A	12.28.05		STEEL REINF. REV.
B	02.26.08		REV. PER BCCO COMMENTS
C	08.06.08		NO CHANGE THIS SHEET
D	11.16.09		LAM. INSUL. GLASS ADDED
E	06.15.10		REV. PER BCCO COMMENTS

date: 03-29-02
scale: 1/2" = 1"
dr. by: HAMID
chk. by:

drawing no.
W02-27

sheet 10 of 11

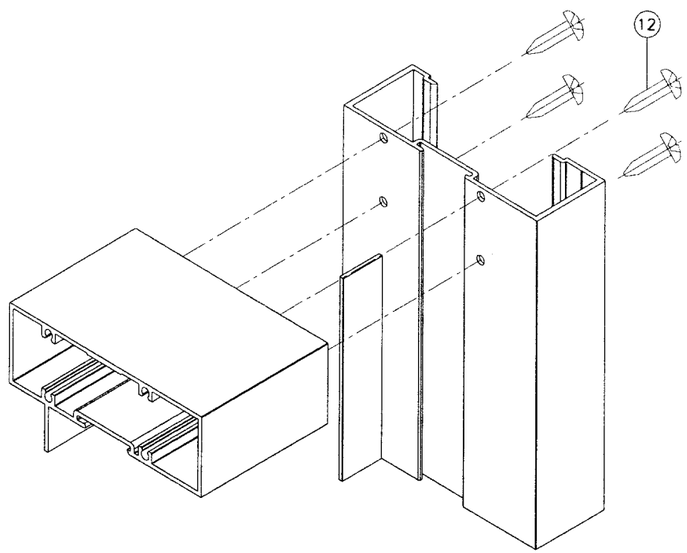

ITEM NO.	PART NUMBER	QUANTITY	DESCRIPTION	MATERIAL	MANF./SUPPLIER/REMARKS
1	DLD-103	AS REQD.	FRAME HEAD/SILL	6063-T5	-
2	DLD-104	AS REQD.	FRAME HORIZONTAL	6063-T6	-
3	DLD-100	AS REQD.	FRAME JAMB/MULLION	6063-T6	-
4	DLD-102	AS REQD.	GLAZING STOP (LAM. GLASS)	6063-T5	-
4A	DLS-132	AS REQD.	GLAZING STOP (LAM. INSUL. GLASS)	6063-T5	-
6	DLD-101	AS REQD.	POCKET FILLER	6063-T6	-
7	BCE-475	AS REQD.	SNAP IN COVER, 2-1/2" LONG	6063-T6	-
8	-	AS REQD.	GLAZING GASKET (LAM. GLASS)	NEOPRENE	-
8A	TR-3235E	AS REQD.	GLAZING GASKET (LAM. INSUL. GLASS)	EPDM	-
9	-	AS REQD.	GLAZING COMPOUND	SILICONE	DOW 995
10	V-2206	AS REQD.	GLAZING TAPE	-	NORTON
11	-	AS REQD.	SETTING BLOCK AT 1/4" POINTS	NEOPRENE	1/8" X 3/4" X 2" LONG
11A	TX17005E	AS REQD.	SETTING BLOCK AT 1/4" POINTS	NEOPRENE	-
12	#12 X 1-1/4"	4/ CORNER	ASSEMBLY SCREWS PHSMS	STEEL	-
13	-	AS REQD.	MULLION REINFORCING CHANNEL, FULL LENGTH	STEEL	1-5/16 X 4-5/8 X 3/16"
13A	-	AS REQD.	MULLION REINFORCING CHANNEL, FULL LENGTH	STEEL	1-1/8 X 4-5/8 X 1/4"
14	-	AS REQD.	MULLION REINFORCING BAR, FULL LENGTH	STEEL	-
15	DLD-124	2/DOOR	DOOR MULLION	6063-T6	-
16	-	AS REQD.	DOOR MULLION REINF. CHANNEL, FULL LENGTH (LIGHT)	STEEL	-
17	-	AS REQD.	DOOR MULLION REINF. CHANNEL, FULL LENGTH (MEDIUM/HEAVY)	STEEL	-
18	-	AS REQD.	DOOR MULLION REINFORCING BAR, FULL LENGTH (HEAVY)	STEEL	-

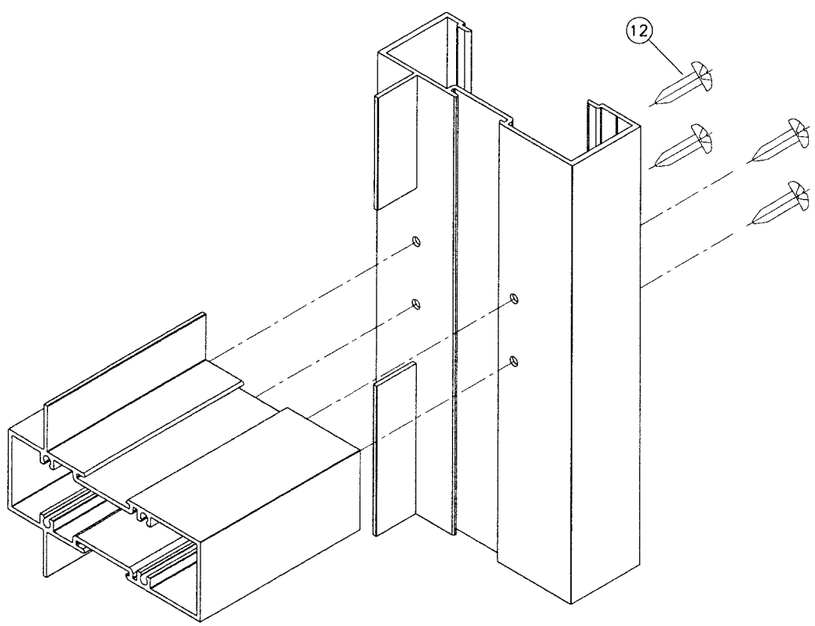

PRODUCT REVISED
as complying with the Florida
Building Code
Acceptance No. 10-0308.02
Expiration Date MAY 20, 2014
By Ishaq I. Chan
Miami Dade Product Control
Division

Engr: JAVAD AHMAD
CIVIL
FLA. PE # 70592
C.A.N. 3538

JUN 18 2010

AL-FAROOQ CORPORATION
ENGINEERS & PRODUCT DEVELOPMENT
1235 S.W. 87 AVE
MIAMI, FLORIDA 33174
TEL. (305) 264-8100 FAX. (305) 262-6978

STORE\02-27DD

DHS-500 ALUM WINDOW WALL STOREFRONT SYS.

DELTA DOORS
7500 N.W. 69TH AVE.
MIAMI, FL 33166
TEL. (305) 888-0077 FAX. (305) 884-3111

revisions:

no	date	by	description
A	12.28.05		STEEL REINF. REV.
B	02.26.08		REV. PER BCCO COMMENTS
C	08.06.08		NO CHANGE THIS SHEET
D	11.16.09		LAM. INSUL. GLASS ADDED
E	06.15.10		REV. PER BCCO COMMENTS

date: 03-29-02
scale: 1/2" = 1"
dr. by: HAMID
chk. by:

drawing no.
W02-27