MIAMI-DADE COUNTY
BUILDING CODE COMPLIANCE OFFICE (BCCO)
PRODUCT CONTROL DIVISION

MIAMI-DADE COUNTY, FLORIDA
METRO-DADE FLAGLER BUILDING
140 WEST FLAGLER STREET, SUITE 1603
MIAMI, FLORIDA 33130-1563
(305) 375-2901 FAX (305) 372-6339
www.miamidade.gov/buldingcode

NOTICE OF ACCEPTANCE (NOA)

Gensteel Doors Inc.
4950 Hickmore Street
Ville St. Laurent, Quebec, Canada H4T1K6

SCOPE: This NOA is being issued under the applicable rules and regulations governing the use of construction materials. The documentation submitted has been reviewed by Miami-Dade County Product Control Division and accepted by the Board of Rules and Appeals (BORA) to be used in Miami Dade County and other areas where allowed by the Authority Having Jurisdiction (AHJ).

This NOA shall not be valid after the expiration date stated below. The Miami-Dade County Product Control Division (In Miami Dade County) and/or the AHJ (in areas other than Miami Dade County) reserve the right to have this product or material tested for quality assurance purposes. If this product or material fails to perform in the accepted manner, the manufacturer will incur the expense of such testing and the AHJ may immediately revoke, modify, or suspend the use of such product or material within their jurisdiction. BORA reserves the right to revoke this acceptance, if it is determined by Miami-Dade County Product Control Division that this product or material fails to meet the requirements of the applicable building code.

This product is approved as described herein, and has been designed to comply with the Florida Building Code, including the High Velocity Hurricane Zone.

DESCRIPTION: Series Genstorm Outswing Steel Doors – L.M.I.

APPROVAL DOCUMENT: Drawing No. **AD10-02**, titled "Genstorm Outswing Single Door System - LMI", sheet 1 through 7 of 7, dated 03/15/10, prepared by MCY Engineering, Inc, signed and sealed by Yiping Wang, P.E., bearing the Miami-Dade County Product Control revision stamp with the Notice of Acceptance number and expiration date by the Miami-Dade County Product Control Division.

MISSILE IMPACT RATING: Large and Small Missile Impact Resistant

LABELING: Each unit shall bear one of the following permanent labels:

Gensteel Doors Inc.	Gensteel Doors Inc.	North American Doors Corp.
4950 Hickmore Street	2335 Industrial Park Drive	6 Industrial Blvd.
Ville St. Laurent, Quebec, Canada H4T1K6	Cornwall, Ontario, Canada K6H7M4	Plattsburgh, NY 12901-1911

and the statement: "Miami-Dade County Product Control Approved".

RENEWAL of this NOA shall be considered after a renewal application has been filed and there has been no change in the applicable building code negatively affecting the performance of this product.

TERMINATION of this NOA will occur after the expiration date or if there has been a revision or change in the materials, use, and/or manufacture of the product or process. Misuse of this NOA as an endorsement of any product, for sales, advertising or any other purposes shall automatically terminate this NOA. Failure to comply with any section of this NOA shall be cause for termination and removal of NOA.

ADVERTISEMENT: The NOA number preceded by the words Miami-Dade County, Florida, and followed by the expiration date may be displayed in advertising literature. If any portion of the NOA is displayed, then it shall be done in its entirety.

INSPECTION: A copy of this entire NOA shall be provided to the user by the manufacturer or its distributors and shall be available for inspection at the job site at the request of the Building Official.

This NOA **revises and renews NOA # 05-0127.10** and consists of this page 1 and evidence pages E-1 and E-2, as well as approval document mentioned above.

The submitted documentation was reviewed by **Carlos M. Utrera, P.E.**

MIAMI-DADE COUNTY APPROVED

08/03/10

NOA No 10-0322.15
Expiration Date: August 04, 2015
Approval Date: August 25, 2010

NOTICE OF ACCEPTANCE: EVIDENCE SUBMITTED

A. DRAWINGS

1. Drawing No. **AD10-02**, titled "Genstorm Outswing Single Door System - LMI", sheet 1 through 7 of 7, dated 03/15/10, prepared by MCY Engineering, Inc, signed and sealed by Yiping Wang, P.E.

B. TESTS

1. Test reports on 1) Air Infiltration Test, per FBC, TAS 202-94
   2) Uniform Static Air Pressure Test, Loading per FBC, TAS 202-94
   3) Water Resistance Test, per FBC, TAS 202-94
   4) Large Missile Impact Test per FBC, TAS 201-94
   5) Cyclic Wind Pressure Loading per FBC, TAS 203-94
   6) Forced Entry Test, per FBC 2411 3.2.1 and TAS 202-94
   7) Tensile Test, per ASTM A370-05

   Along with marked-up drawings and installation diagram of Genstorm Opaque, Glazed and Louvered Single and Double Swinging Doors, prepared by Fenestration Testing Laboratory, Inc., Test Report No. **5877**, dated 10/13/09, signed and sealed by Julio E. Gonzalez, P.E.
2. Test reports on 1) Uniform Static Air Pressure Test, Loading per FBC, TAS 202-94
   2) Large Missile Impact Test per FBC, TAS 201-94
   3) Cyclic Wind Pressure Loading per FBC, TAS 203-94

   Along with marked-up drawings and installation diagram of Genstorm Opaque Single Swinging Doors, prepared by Fenestration Testing Laboratory, Inc., Test Report No. **5898**, dated 09/14/09, signed and sealed by Julio E. Gonzalez, P.E.

3. Test reports on 1) Air Infiltration Test, per FBC, TAS 202-94
   2) Uniform Static Air Pressure Test, Loading per FBC, TAS 202-94
   3) Water Resistance Test, per FBC, TAS 202-94
   4) Large Missile Impact Test per FBC, TAS 201-94
   5) Cyclic Wind Pressure Loading per FBC, TAS 203-94
   6) Forced Entry Test, per FBC 2411 3.2.1 and TAS 202-94

   along with marked-up drawings and installation diagram of 8080 Double Outswing Honeycomb Steel Door System, prepared by Intertek Testing Services NA LTD., Test Reports No. **ITS-3058370-SINGLE,** dated 12/09/04, signed and sealed by Stephen J. Emerman, P. E. ***"Submitted under NOA # 05-0127.10"***

08/03/10

Carlos M. Utrera, P.E.
Product Control Examiner
NOA No 10-0322.15
Expiration Date: August 04, 2015
Approval Date: August 25, 2010

NOTICE OF ACCEPTANCE: EVIDENCE SUBMITTED

C. CALCULATIONS

1. Anchoring calculations and structural analysis, prepared by MCY Engineering, Inc, dated 03/14/10, signed and sealed by Yiping Wang, P.E.

D. QUALITY ASSURANCE

1. Miami Dade Building Code Compliance Office (BCCO)

E. MATERIAL CERTIFICATIONS

1. None.

F. STATEMENTS

1. Statement letter of code conformance to FBC 2007, issued by MCY Engineering, Inc, dated 03/14/10, signed and sealed by Yiping Wang, P.E.
2. Statement letter of no financial interest issued by MCY Engineering, Inc, dated 03/14/10, signed and sealed by Yiping Wang, P.E.

G. OTHERS

1. Distributor Agreement dated 01/22/10.

08/03/10

Carlos M. Utrera, P.E.
Product Control Examiner
NOA No 10-0322.15
Expiration Date: August 04, 2015
Approval Date: August 25, 2010

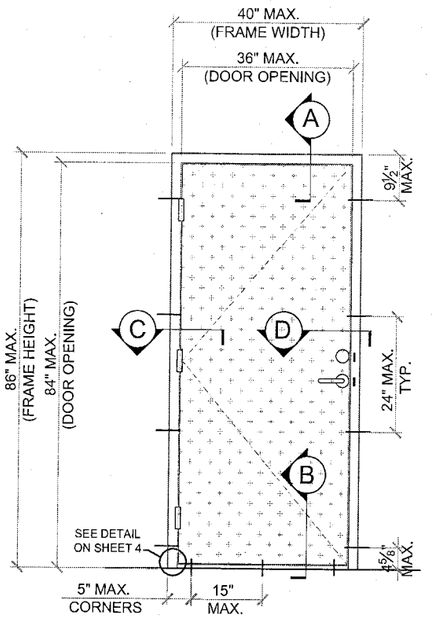

SINGLE DOOR TYP. ELEVATION

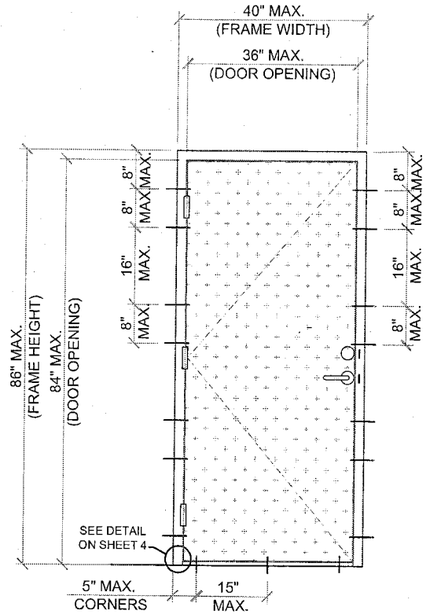

ANCHOR LAYOUT
(FOR WIRE ANCHOR ONLY)

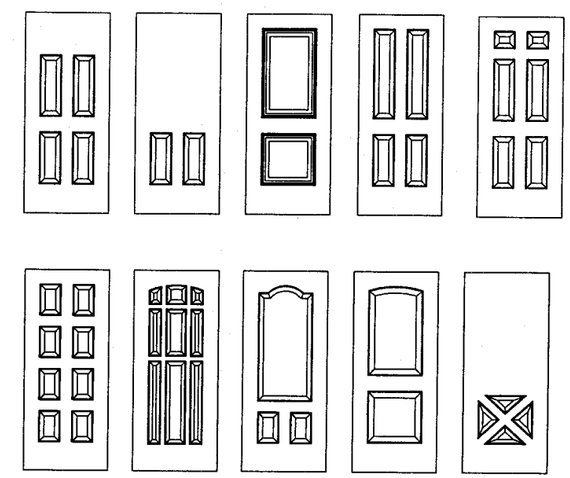

OPTIONAL EMBOSSED DOOR LEAF PATTERNS:

DESIGN LOAD
(FOR SIZES SHOWN ABOVE OR SMALLER AS PERMITTED BY FBC)
SEE SHEET 5 OF 7

SERIES GENSTORM OUTSWING SINGLE DOOR SYSTEM

- THIS PRODUCT HAS BEEN DESIGNED AND TESTED TO COMPLY WITH THE REQUIREMENTS OF THE FLORIDA BUILDING CODE 2007 EDITION INCLUDING HIGH VELOCITY HURRICANE ZONE (HVHZ).
- DOORS RATED FOR LARGE MISSILE IMPACT AND DO NOT REQUIRE SHUTTERS.
- DOORS APPROVED FOR INSTALLATIONS WHERE WATER INFILTRATION RESISTANCE IS OR IS NOT REQUIRED.
- ANCHORS SHALL BE AS LISTED, SPACED AS SHOWN ON DETAILS. ANCHORS EMBEDMENT TO BASE MATERIAL SHALL BE BEYOND WALL DRESSING OR STUCCO.
- ANCHORING OR LOADING CONDITIONS NOT SHOWN IN THESE DETAILS ARE NOT PART OF THIS APPROVAL.
- MATERIALS INCLUDING BUT NOT LIMITED TO STEEL/METAL SCREWS THAT COME INTO CONTACT WITH OTHER DISSIMILAR MATERIALS SHALL MEET THE REQUIREMENTS OF 2007 FLORIDA BUILDING CODE SECTION 2002.8.4.
- METAL STRUCTURES NOT BY GENSTEEL DOOR CO. MUST SUPPORT LOADS IMPOSED BY DOOR SYSTEM AND TRANSFER THEM TO THE BUILDING STRUCTURE.
- WOOD BUCKS BY OTHERS MUST BE ANCHORED PROPERLY TO TRANSFER LOADS TO THE STRUCTURE.
- A LOAD DURATION FACTOR IN ALLOWABLE STRESS IS USED IN DESIGN OF ANCHORS INTO WOOD ONLY.
- DOOR PANEL: MIN. 20 GA. STEEL Fu = 55 KSI
  DOOR FRAME: MIN. 18 GA. STEEL Fu = 48 KSI
- DOOR PANEL OPTION: STAINLESS STEEL A316
  MIN. 20GA. Fu=55 KSI
  DOOR FRAME OPTION: STAINLESS STEEL A316
  MIN. 18GA. Fu=48 KSI

NOTES:
EGRESS REQUIREMENTS TO BE REVIEWED BY BUILDING OFFICIAL.

PRODUCT REVISED
as complying with the Florida Building Code
Acceptance No 10-0322.15
Expiration Date 08/04/2015
By
Miami-Dade Product Control Division
MIAMI DADE COUNTY

YIPING WANG, P.E.
FLORIDA REGISTRATION
PE #55983
C.A.N. 28677

JUL 22 2010

REVISIONS

NO.	DATE	DESCRIPTION
1	7/13/10	AS PER BCCO

MCY ENGINEERING, INC.
GLAZING CONSULTANTS
9110 SW SUNSET DRIVE. MIAMI, FL 33173
P: 305.271.0117
F: 786.573.5063
www.MCYEngineering.comMCY.Engineering@Att.net

GENSTORM OUTSWING SINGLE DOOR SYSTEM - LMI

gensteel doors
www.gensteeldoors.com
4950 Hickmore, St. Laurent, Quebec, Canada, H4T1K6
Tel: (514) 733-3562 Fax: (514) 733-1932

DATE	03-15-10
SCALE	NTS.
DRAWN	M.G
PROJECT	10-01

DRAWING NO.
AD10-02

SHEET 1 OF 7

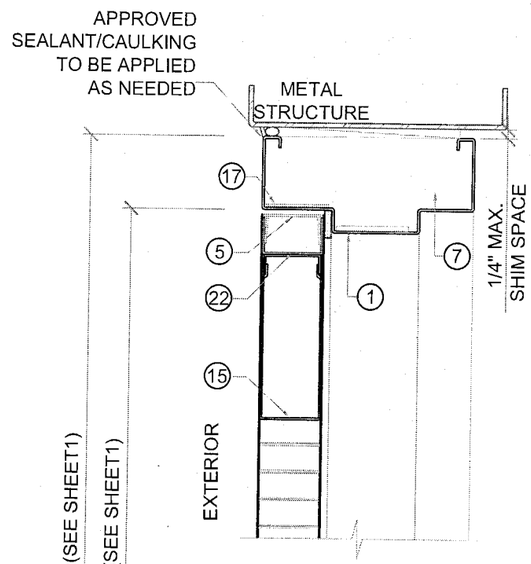

HEAD DETAIL (A)

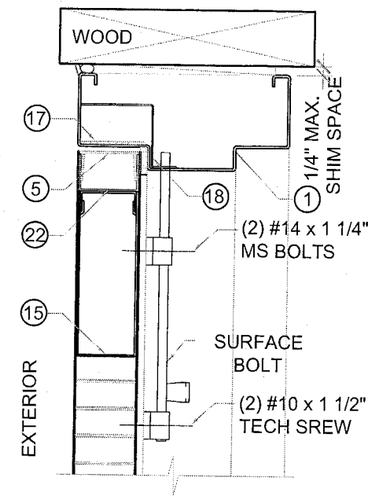

HEAD DETAIL (A)

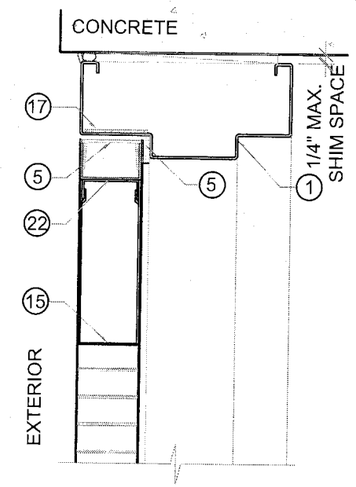

HEAD DETAIL (A)

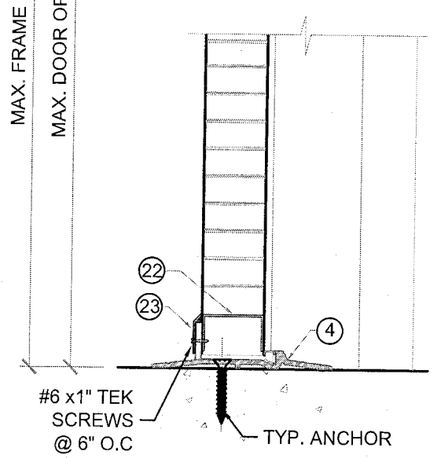

OPTIONAL THRESHOLD (B)

NOT APPR'D FOR WATER RESISTANCE

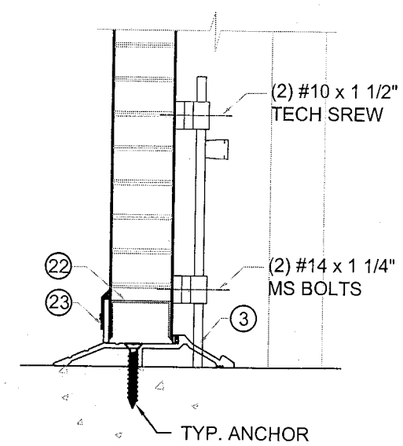

TYPICAL THRESHOLD (B)

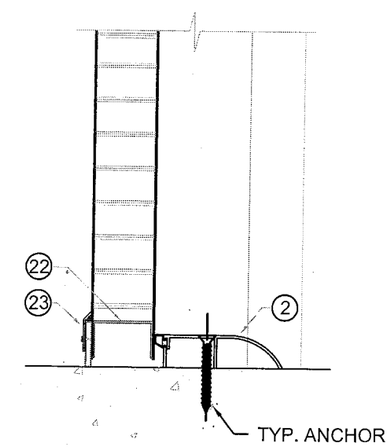

TYPICAL THRESHOLD (B)

TYPICAL ANCHORS @ THRESHOLD:

TYPE F. 1/4" OR 5/16" DIA. ULTRACONS BY 'ELCO' Fy = 155 KSI Fu = 177 KSI
DIRECTLY INTO fc'=3000 PSI MIN. CONCRETE
1-1/2" MIN. EMBED
2-1/2" MIN. EDGE DISTANCE

1/4" TAPCON BY ITW Fy = 90 KSI Fu = 120 KSI
DIRECTLY INTO fc'=3000 PSI MIN. CONCRETE
1-1/2" MIN. EMBED
2-1/2" MIN. EDGE DISTANCE

SEALANT:
ALL FRAME JOINTS AND CORNERS TO BE SEALED WITH SILICONE AT PERIMETER
ALL SCREWS SEALED WITH GE SILICONE II

PRODUCT REVISED
as complying with the Florida Building Code
Acceptance No 10-0322.15
Expiration Date 09/04/2015
By
Miami Dade Product Control Division

MIAMI DADE COUNTY

YIPING WANG, P.E.
FLORIDA REGISTRATION
PE #55983
C.A.N. 28677

JUL 22 2010

REVISIONS

NO.	DATE	DESCRIPTION
1	7/13/10	AS PER BCCO

MCY ENGINEERING, INC.
GLAZING CONSULTANTS
9110 SW SUNSET DRIVE. MIAMI, FL. 33173
P: 305.271.0117
F: 786.573.5063
www.MCYEngineering.comMCY.Engineering@Att.net

GENSTORM OUTSWING SINGLE DOOR SYSTEM - LMI

genteeldoors
www.genteeldoors.com
4950 Hickmore, St. Laurent, Quebec, Canada, H4T1K6
Tel: (514) 733-3562 Fax: (514) 733-1932

DATE	03-15-10
SCALE	NTS.
DRAWN	M.C
PROJECT	10-01

DRAWING NO. AD10-02

SHEET 2 OF 7

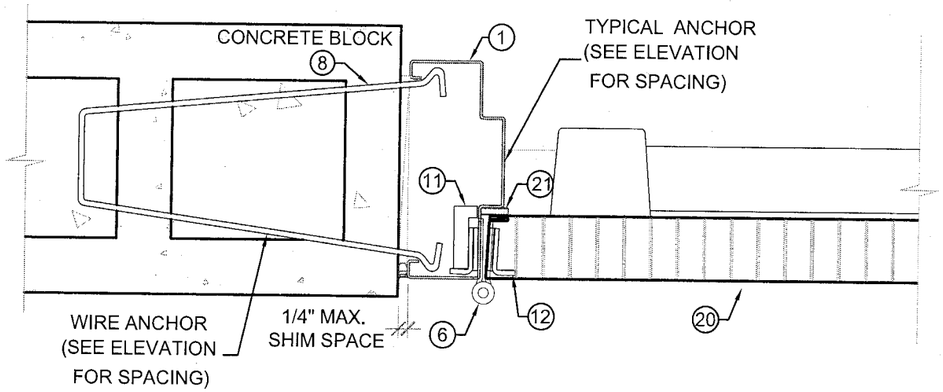

HINGE JAMB
ANCHOR DETAIL (C)

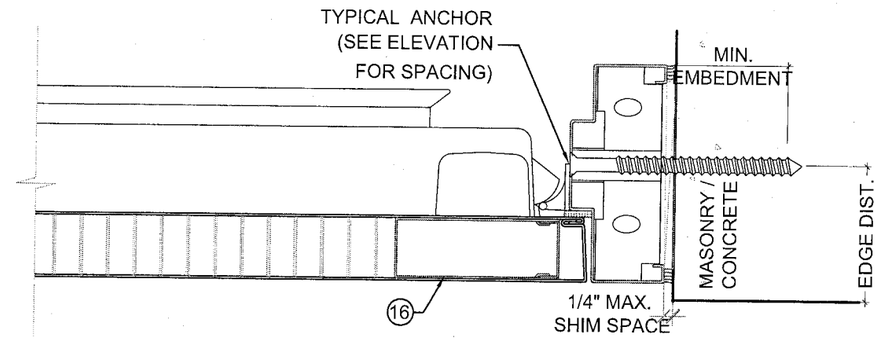

STRIKE JAMB
ANCHOR DETAIL (D)

TYPICAL ANCHORS

TYPE A. 5/16" DIA. ULTRACONS BY 'ELCO' Fy=155 KSI Fu = 177 KSI
DIRECTLY INTO 2BY WOOD BUCK
DIRECTLY INTO fc'=3000 PSI CONCRETE
1-1/2" MIN. EMBED
2-1/2" MIN. EDGE DISTANCE

TYPE B. 3/8" DIA. HLC SLEEVE ANCHOR BY 'HILTI'
DIRECTLY INTO fc'=3000 PSI CONCRETE, 3" MIN. EDGE DIST.
DIRECTLY INTO fc'=2000 PSI CONCRETE BLOCK, 3-1/2" MIN. EDGE DIST.
1-1/4" MIN. EMBED

TYPE C. 3/8" DIA. SLEEVE ANCHOR BY 'WEJ-IT'
DIRECTLY INTO fc'=4000 PSI CONCRETE, 2-3/8" MIN. EMBED
DIRECTLY INTO fc'=2000 PSI CONCRETE BLOCK, 1-1/4" MIN. EMBED
3-1/2" MIN. EDGE DISTANCE

TYPE D. 3/8" DIA. POWER BOLT BY 'POWERS'
DIRECTLY INTO fc'=3000 PSI CONCRETE
2-1/2" MIN. EMBED
3" MIN. EDGE DISTANCE

TYPE E. 5/16" DIA. SMS OR MACHINE BOLTS (MIN. GRADE 2 CRS) OR STST
INTO METAL STRUCTURES (STEEL OR ALUMINUM 1/8" MIN. THICK.)
STEEL : Fy = 36 KSI MIN.
ALUMINUM : 6063-T6 MIN.
(STEEL IN CONTACT WITH ALUMINUM TO BE PLATED OR PAINTED)

TYPE G. WIRE ANCHOR (Fy = 60 ksi.)
0.173 DIA. STEEL WIRE ANCHORS EMBED INTO CONCRETE BLOCK

PRODUCT REVISED
as complying with the Florida
Building Code
Acceptance No 10-0322.15
Expiration Date 09/04/2015
By
Miami Dade Product Control
Division
MIAMI DADE COUNTY

YIPING WANG, P.E.
FLORIDA REGISTRATION
PE #55983
C.A.N. 28677

JUL 22 2010

REVISIONS

NO.	DATE	DESCRIPTION
1	7/13/10	AS PER BCCO

MCY ENGINEERING, INC.
GLAZING CONSULTANTS
9110 SW SUNSET DRIVE. P: 305.271.0117
MIAMI, FL 33173 F: 786.573.5063
www.MCYEngineering.comMCY.Engineering@Att.net

GENSTORM OUTSWING SINGLE DOOR SYSTEM - LMI

genteldoors
www.genteldoors.com
4950 Hickmore, St. Laurent, Quebec, Canada, H4T1K6
Tel: (514) 733-3562 Fax: (514) 733-1932

DATE	03-15-10
SCALE	NTS.
DRAWN	M.G
PROJECT	10-01

DRAWING NO.
AD10-02

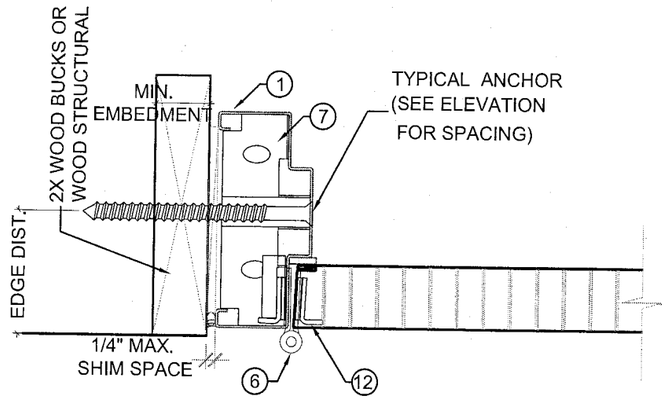

HINGE JAMB DETAIL (C)

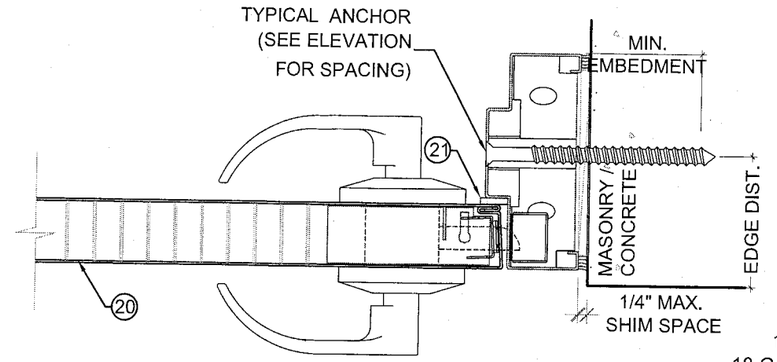

STRIKE JAMB DETAIL (D)

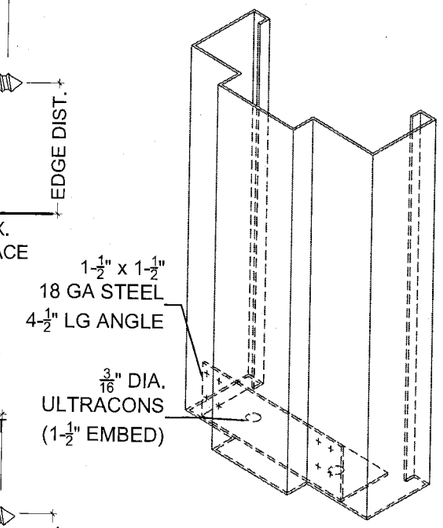

BOTTOM CORNER ANCHOR DETAIL

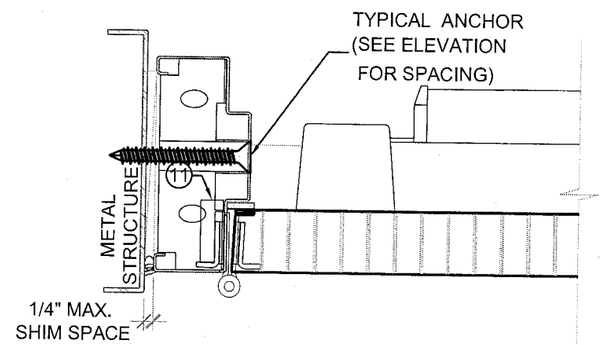

HINGE JAMB DETAIL (C)

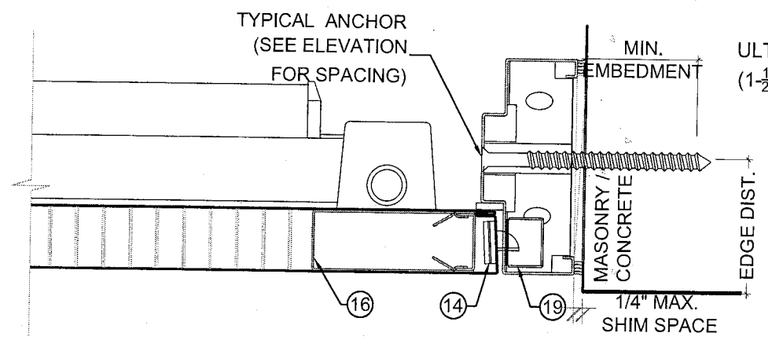

STRIKE JAMB DETAIL (D)

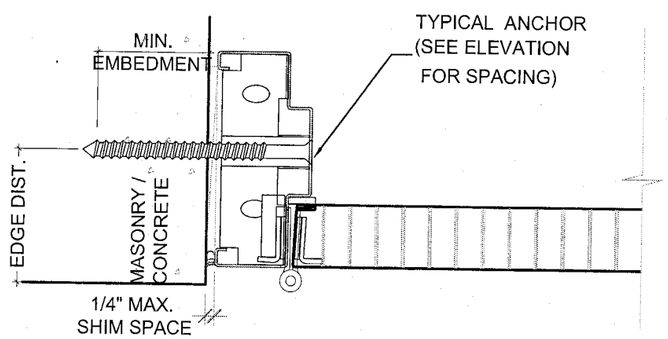

HINGE JAMB DETAIL (C)

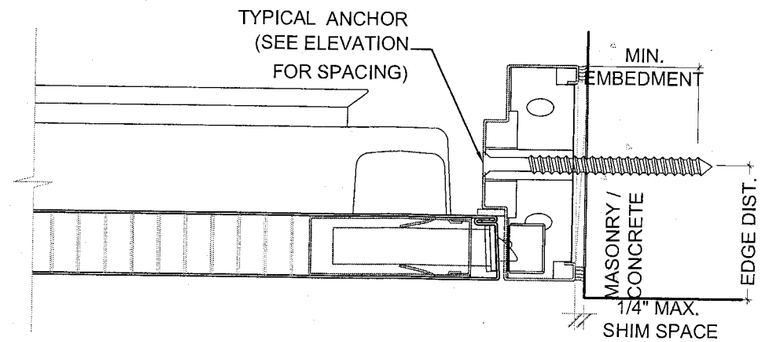

STRIKE JAMB DETAIL (D)

PRODUCT REVISED
as complying with the Florida Building Code
Acceptance No 10-0322.15
Expiration Date 05/04/2015
By
Miami Dade Product Control Division

MIAMI DADE COUNTY

YIPING WANG, P.E.
FLORIDA REGISTRATION
PE #55983
C.A.N. 28677

JUL 22 2010

REVISIONS

NO.	DATE	DESCRIPTION
1	7/13/10	AS PER BCCO

MCY ENGINEERING, INC.
GLAZING CONSULTANTS
9110 SW SUNSET DRIVE. MIAMI, FL. 33173
P: 305.271.0117
F: 786.573.5063
www.MCYEngineering.comMCY.Engineering@Att.net

GENSTORM OUTSWING SINGLE DOOR SYSTEM - LMI

gensteeldoors
www.gensteeldoors.com
4950 Hickmore, St. Laurent, Quebec, Canada, H4T1K6
Tel: (514) 733-3562 Fax: (514) 733-1932

DATE	03-15-10
SCALE	NTS.
DRAWN	M.G
PROJECT	10-01

DRAWING NO.
AD10-02

SHEET 4 OF 7

LOCK OPTIONS

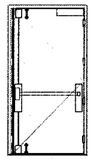

OPTION 1

- VON DUPRIN 9847EO SURFACE VERTICAL ROD WITH #229 STRIKE USING SIX #9x25mm (1") MACHINE SCREWS AND TWO #14x25mm (1") MACHINE SCREWS SEALED WITH "GE SILICONE II"
- "IVES" SB453 SURFACE MOUNT MANUALLY OPERATED FLUSH BOLT. TO BE FASTENED WITH (2) 10 x 1-1/2" TEKS SCREW + (2) 14x1 1-1/4" MS

DESIGN LOAD
+65.0 PSF
-65.0 PSF

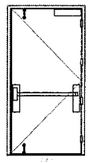

OPTION 2

- "VON DUPRIN" 9875EO MORTISE EXIT WITH (2) 8-32 x 3/8" FH MS. LOCATED 39-3/4" FROM BOTTOM
- "IVES" SB453 SURFACE MOUNT MANUALLY OPERATED FLUSH BOLT. TO BE FASTENED WITH (2) 10 x 1-1/2" TEKS SCREW + (2) 14x1 1-1/4" MS

DESIGN LOAD
+80.0 PSF
-80.0 PSF

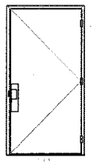

OPTION 3

"SARGENT" 8200 SURFACE MOUNT MORTISE LOCK WITH HANDLE. WITH SURFACE MOUNT METALLIC DEAD-BOLT. LOCATED 38" FROM BOTTOM WITH (2) 8-32 x $\frac{3}{4}$" FH MS

DESIGN LOAD
+65.0 PSF
-65.0 PSF

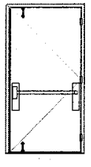

OPTION 4

"PRECISION" HC2300 MORTISE EXIT. SURFACE MOUNT MANUALLY OPERATED FLUSH BOLT AT TOP AND BOTTOM. WITH (4) 10 x 1-1/4" FH SMS

DESIGN LOAD
+65.0 PSF
-65.0 PSF

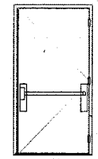

OPTION 5

"PRECISION" HC2800 CONCEALED VERTICAL ROD. SURFACE MOUNT TWO POINT LOCK SYSTEM WITH PANIC DEVICE WITH (4) 10-24 x 1-1/4". LOCATED 39-1/2" FROM BOTTOM

(2)-SURFACE MOUNT METALLIC STRIKE PLATE AT HEAD TO BE FASTENED WITH (2) 1/4-20 FH MS

DESIGN LOAD
+80.0 PSF
-80.0 PSF

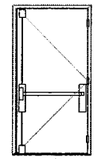

OPTION 6

"PRECISION" HC2200 SURFACE VERTICAL ROD.
(4) 10-24 x 1-1/4" OH MS. LOCATED 39-3/4" FROM BOTTOM

DESIGN LOAD
+80.0 PSF
-80.0 PSF

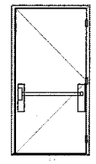

OPTION 7

"VON DUPRIN" 9847 CONCEALED VERTICAL ROD WITH PANIC DEVICE WITH (2) 8-32 x 3/8" FH MS. LOCATED 39-3/4" FROM BOTTOM

DESIGN LOAD
+80.0 PSF
-80.0 PSF

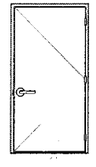

OPTION 8

"DOREX" FC 10 SERIES LEVER LOCK.
"DOREX" HFA51 DEADBOLT

DESIGN LOAD
+80.0 PSF
-80.0 PSF

SINGLE DOOR

HINGES: STEEL MORTISE HINGES 3 PER LEAF. LOCATED AT 9-$\frac{5}{8}$" MAX. FROM TOP OF DOOR TO CENTER LINE OF HINGE. AND TO BE SPACED OUT 31-15/16" MAX. FROM CL TO CL OF HINGE. TO BE FASTENED BY #12-24 x $\frac{1}{2}$" FLATHEAD MACHINE SCREWS.

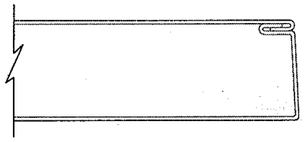

DOOR EDGE CONSTRUCTION

PRODUCT REVISED
as complying with the Florida Building Code
Acceptance No 10-0322.15
Expiration Date 08/04/2015
By
Miami Dade Product Control Division

MIAMI DADE COUNTY

YIPING WANG, P.E.
FLORIDA REGISTRATION
PE #55983
C.A.N. 28677

JUL 22 2010

REVISIONS

NO.	DATE	DESCRIPTION
1	7/13/10	AS PER BCCO

MCY ENGINEERING, INC.
GLAZING CONSULTANTS
9110 SW SUNSET DRIVE. P: 305.271.0117
MIAMI, FL 33173 F: 786.573.5063
www.MCYEngineering.comMCY.Engineering@Att.net

GENSTORM OUTSWING SINGLE DOOR SYSTEM - LMI

gensteldoors
www.gensteldoors.com
4950 Hickmore, St. Laurent, Quebec, Canada, H4T1K6
Tel: (514) 733-3562 Fax: (514) 733-1932

DATE	03-15-10
SCALE	NTS.
DRAWN	M.G
PROJECT	10-01

DRAWING NO.
AD10-02

SHEET 5 OF 7

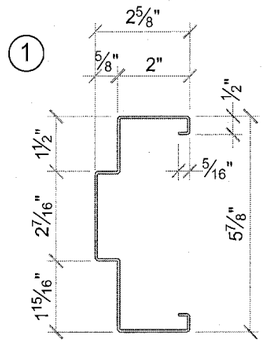

DOOR FRAME JAMB AND HEAD

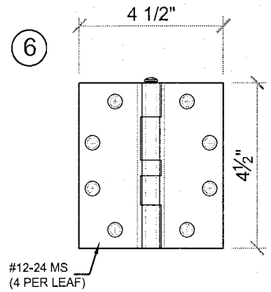

.134" THICK STEEL HINGE

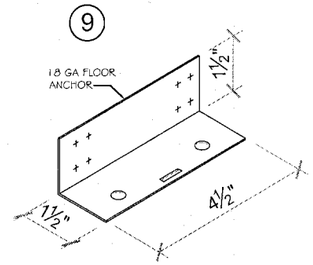

FA1040
FLOOR ANCHOR

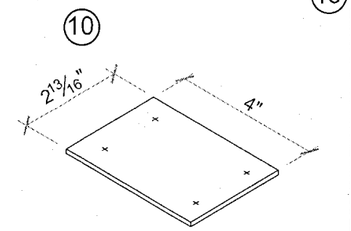

12 GA. REINFORCEMENT PLATE

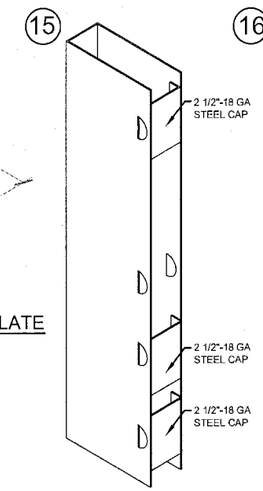

PART No. DC1000 & DR1000
CLOSER BOX REINFORCEMENT

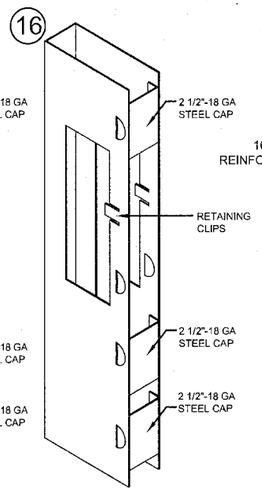

PART No. DR1010
MORTISE BOX REINFORCEMENT

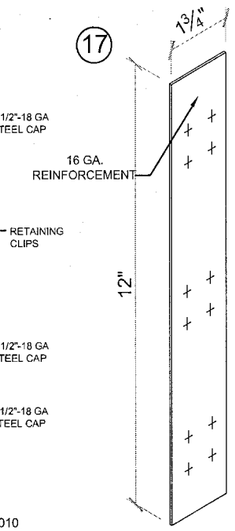

FR1200
FRAME REINFORCEMENT

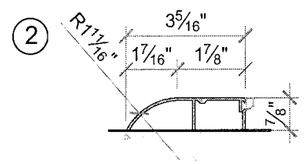

THRESHOLD

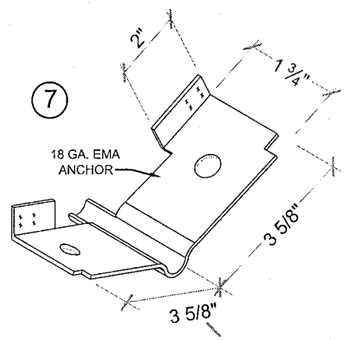

FA3010
EMA ANCHOR

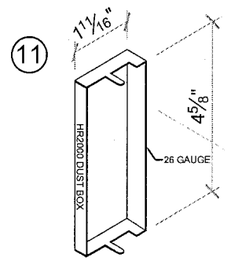

HR2000
DUST BOX

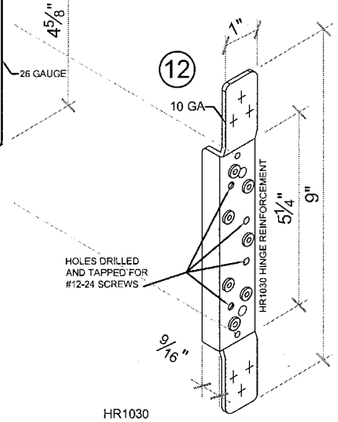

HR1030
HINGE REINFORCEMENT

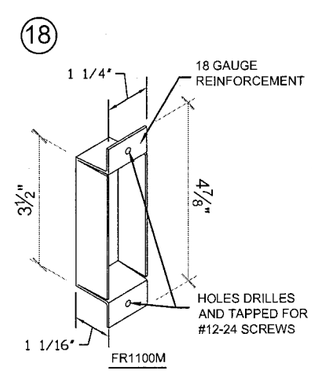

STRIKE DUSK BOX

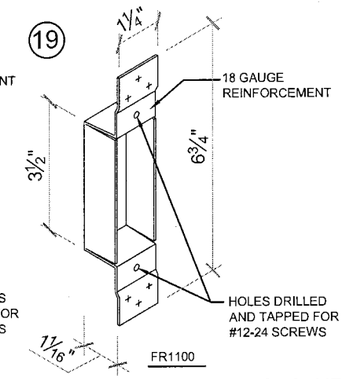

ASA STRIKE BOX REINFORCEMENT

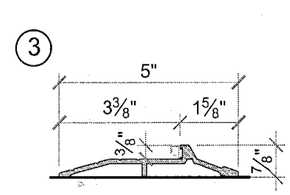

THRESHOLD

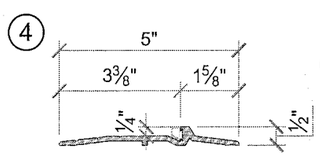

OPTIONAL THRESHOLD

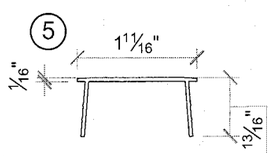

VINYL CAP

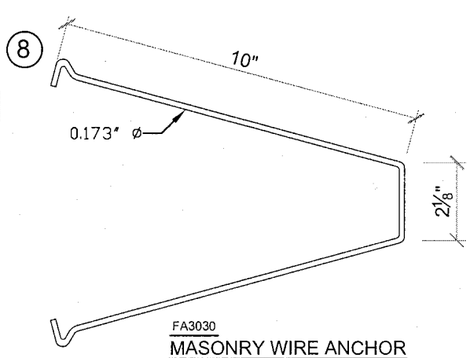

FA3030
MASONRY WIRE ANCHOR

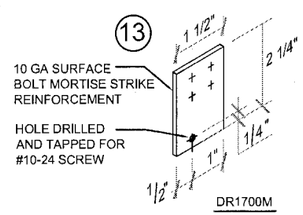

DR1700M
SURFACE BOLT STRIKE REINFORCEMENT

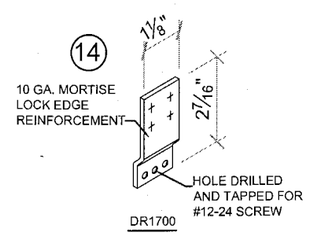

DR1700
MORTISE LOCK EDGE REINFORCEMENT

PRODUCT REVISED
as complying with the Florida
Building Code
Acceptance No 10-0322.15
Expiration Date 08/04/2015
By
Miami Dade Product Control
Division

MIAMI DADE COUNTY

YIPING WANG, P.E.
FLORIDA REGISTRATION
PE #55983
C.A.N. 28677

JUL 22 2010

REVISIONS		
NO.	DATE	DESCRIPTION
1	7/13/10	AS PER BCCO

MCY ENGINEERING, INC.
GLAZING CONSULTANTS
9110 SW SUNSET DRIVE. MIAMI, FL. 33173
P: 305.271.0117
F: 786.573.5063
www.MCYEngineering.comMCY.Engineering@Att.net

GENSTORM OUTSWING SINGLE DOOR SYSTEM - LMI

gensteeldoors
www.gensteeldoors.com
4950 Hickmore, St. Laurent, Quebec, Canada, H4T1K6
Tel: (514) 733-3562 Fax: (514) 733-1932

DATE	03-15-10
SCALE	NTS.
DRAWN	M.G
PROJECT	10-01

DRAWING NO.
AD10-02

SHEET 6 OF 7

BILL OF MATERIALS

ITEM	PART No.	MATERIAL	QTY.	DESCRIPTION	MANUFACTURER/SUPPLIER/ REMARKS
1	-	STEEL OR ST/ST	AS REQD.	FRAME HEAD/JAMB (5-$\frac{7}{8}$" x 2")	18 GA. (0.048MIN.) Fu= 48KSI MIN.
2	PMK2051	ALUM.	1	THRESHOLD	PEMKO
3	PMK177A	ALUM.	1	THRESHOLD	PEMKO
4	PMK2005AT	ALUM.	1	THRESHOLD OPTION	PEMKO
5	-	VINYL.	1	VINYL CAP	-
6	179-454	STEEL	3 PER LEAF	DOREX, HAGER #179-454-15 HINGE	STANLEY
7	FA3010	STEEL	AS REQD.	EMA ANCHOR	GENSTEEL
8	FA3030	STEEL	AS REQD.	MASONRY WIRE ANCHOR	0.173 DIA. Fy= 60 KSI MIN.
9	FA1040	STEEL	2	FLOOR ANCHOR 18 GA. (1-$\frac{1}{2}$" x 1-$\frac{1}{2}$" x 4-$\frac{1}{2}$" LG)	GENSTEEL
10	-	STEEL	AS REQD.	2-$\frac{3}{16}$" x 4" 12 GA. STEEL REINFORCEMENT	GENSTEEL
11	HR2000	STEEL	3 PER LEAF	HINGE DUST BOX	GENSTEEL
12	HR1030	STEEL (10 GA.)	3 PER LEAF	HINGE REINFORCEMENT WELDED TO FRAME	GENSTEEL
13	DR1700M	STEEL	AS REQD.	SURFACE BOLT MORTISE STRIKE REINFORCEMENT	GENSTEEL
14	DR1700	STEEL	AS REQD.	MORTISE LOCK EDGE REINFORCEMENT WELDED	GENSTEEL
15	DC1000 & DR1000	STEEL	AS REQD.	CLOSER BOX REINFORCEMENT	GENSTEEL
16	DR1010	STEEL	AS REQD.	MORTISE BOX REINFORCEMENT	GENSTEEL
17	FR1200	STEEL	AS REQD.	1-$\frac{3}{4}$" x 12" 16 GA. FRAME REINFORCEMENT	GENSTEEL
18	FR1100M	STEEL	AS REQD.	STRIKE DUST BOX	GENSTEEL
19	FR1100	STEEL	AS REQD.	ASA STRIKE BOX REINFORCEMENT	GENSTEEL
20	--	STEEL OR ST/ST	AS REQD.	DOOR PANEL	20GA. (0.036 MIN.) Fu = 55KSI
21	P 387	-	AS REQD.	PEMKO 387 CLOSED CELL SPONGE WEATHERSTRIP	PEMKO
22	CH3601	STEEL	2	DOOR END CHANNEL	GENSTEEL
23	2100	ALUM.	AS REQD.	DOOR SWEEP	UNIQUE

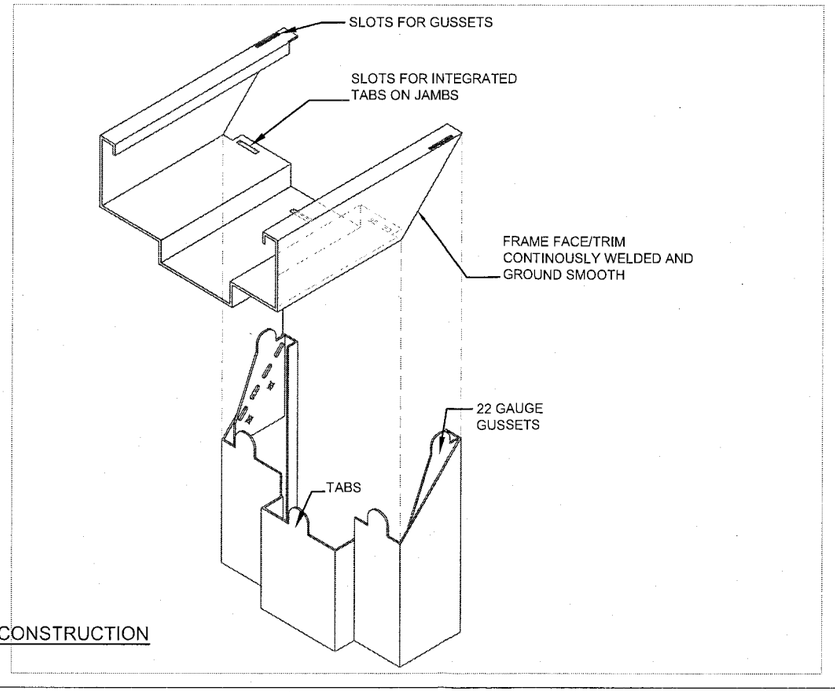

CORNER FRAME CONSTRUCTION

PRODUCT REVISED
as complying with the Florida Building Code
Acceptance No. 10-0322.15
Expiration Date 03/04/2015
By
Miami Dade Product Control Division

MIAMI DADE COUNTY

YIPING WANG, P.E.
FLORIDA REGISTRATION
PE #55983
C.A.N. 28677

JUL 22 2010

REVISIONS

NO.	DATE	DESCRIPTION
1	7/13/10	AS PER BCCO

MCY ENGINEERING, INC.
GLAZING CONSULTANTS
9110 SW SUNSET DRIVE. MIAMI, FL 33173
P: 305.271.0117
F: 786.573.5063
www.MCYEngineering.comMCY.Engineering@Att.net

GENSTORM OUTSWING SINGLE DOOR SYSTEM - LMI

gensteeldoors
www.gensteeldoors.com
4950 Hickmore, St. Laurent, Quebec, Canada, H4T1K6
Tel: (514) 733-3562 Fax: (514) 733-1932

DATE	03-15-10
SCALE	NTS.
DRAWN	M.G
PROJECT	10-01

DRAWING NO.
AD10-02

SHEET 7 OF 7