MIAMI-DADE COUNTY, FLORIDA
METRO-DADE FLAGLER BUILDING

BUILDING CODE COMPLIANCE OFFICE (BCCO)
PRODUCT CONTROL DIVISION

140 WEST FLAGLER STREET, SUITE 1603
MIAMI, FLORIDA 33130-1563
(305) 375-2901 FAX (305) 375-2908
www.buildingcodeonline.com

NOTICE OF ACCEPTANCE (NOA)

GAF Materials Corporation
1361 Alps Road
Wayne, NJ. 07470

SCOPE:
This NOA is being issued under the applicable rules and regulations governing the use of construction materials. The documentation submitted has been reviewed by Miami-Dade County Product Control Division and accepted by the Board of Rules and Appeals (BORA) to be used in Miami Dade County and other areas where allowed by the Authority Having Jurisdiction (AHJ).

This NOA shall not be valid after the expiration date stated below. The Miami-Dade County Product Control Division (In Miami Dade County) and/or the AHJ (in areas other than Miami Dade County) reserve the right to have this product or material tested for quality assurance purposes. If this product or material fails to perform in the accepted manner, the manufacturer will incur the expense of such testing and the AHJ may immediately revoke, modify, or suspend the use of such product or material within their jurisdiction. BORA reserves the right to revoke this acceptance, if it is determined by Miami-Dade County Product Control Division that this product or material fails to meet the requirements of the applicable building code.

This product is approved as described herein, and has been designed to comply with the Florida Building Code, including the High Velocity Hurricane Zone.

DESCRIPTION: GAF-ElkVented RidgeCrest

LABELING: Each unit shall bear a permanent label with the manufacturer's name or logo, city, state and following statement: "Miami-Dade County Product Control Approved", unless otherwise noted herein.

RENEWAL of this NOA shall be considered after a renewal application has been filed and there has been no change in the applicable building code negatively affecting the performance of this product.

TERMINATION of this NOA will occur after the expiration date or if there has been a revision or change in the materials, use, and/or manufacture of the product or process. Misuse of this NOA as an endorsement of any product, for sales, advertising or any other purposes shall automatically terminate this NOA. Failure to comply with any section of this NOA shall be cause for termination and removal of NOA.

ADVERTISEMENT: The NOA number preceded by the words Miami-Dade County, Florida, and followed by the expiration date may be displayed in advertising literature. If any portion of the NOA is displayed, then it shall be done in its entirety.

INSPECTION: A copy of this entire NOA shall be provided to the user by the manufacturer or its distributors and shall be available for inspection at the job site at the request of the Building Official.

This revises and renews NOA#04-1221.02 and consists of pages 1 through 5.
The submitted documentation was reviewed by Alex Tigera.

ROOFING ASSEMBLY APPROVAL

Category: Roofing
Sub-Category: 07720 Static Roof Vent
Materials: Plastic

TRADE NAMES OF PRODUCTS MANUFACTURED OR LABELED BY APPLICANT:

Product	Dimensions	Test Specification	Product Description
Vented RidgeCrest	1-$^{3}/_{4}$" x 13-7/8" x 13-$^{1}/_{4}$"	TAS 100	Plastic High Profile attic ridge vent for installation in shingle roof systems.

EVIDENCE SUBMITTED:

Test Agency/Identifier	Name	Report	Date
PRI Asphalt Technologies, Inc..	TAS 100	BRY-023-02-01	12/31/03
PRI Asphalt Technologies, Inc..	Outdoor Exposure	BRY-025-02-01	09/17/04
ETC Laboratories	ASTM D 1929 ASTM D 2843 ASTM D 635	ETC-03-718-14602.0	01/20/04

APPROVED APPLICATIONS:

System Type A: Mechanical attachment of vent for shingle roofs

Cutout: Cut a minimum 1 ½" slot along the apex of the roof by cutting ¾" on each side of the ridge. The slot shall terminate approximately 12" from the rake edge.

Installation: Center the width of the vent over the cutout. Each vent section is fastened to the roof on each side using a minimum 11ga. 2-$^{1}/_{2}$" x $^{3}/_{8}$" smooth shank roofing nail in the area designated by the manufacturer. Each vent section has an exposure of 9-$^{5}/_{8}$". See Detail 'A'

Net Free Area: Refer to manufacturers published literature

LIMITATIONS:

1. Refer to applicable building code for required ventilation.
2. The installation shall be applied in compliance with the manufacturer's current published application instruction and the requirements set forth in applicable building code.
3. This acceptance is for installations over asphaltic shingle roofs only.
4. Vented RidgeCrest vent shall not be connected at ridge intersection, nor within 12" of any side wall or roof protrusion, with a ventilation slot clearance of 12" from such obstructions.
5. Vented RidgeCrest vent shall not be installed on roof hips.
6. Vented RidgeCrest vent shall not be installed on roof mean heights greater than 33 feet.
7. All products listed herein shall have a quality assurance audit in accordance with the Florida Building Code and Rule 9B-72 of the Florida Administrative Code.

DETAIL A
COURSE LAYOUT

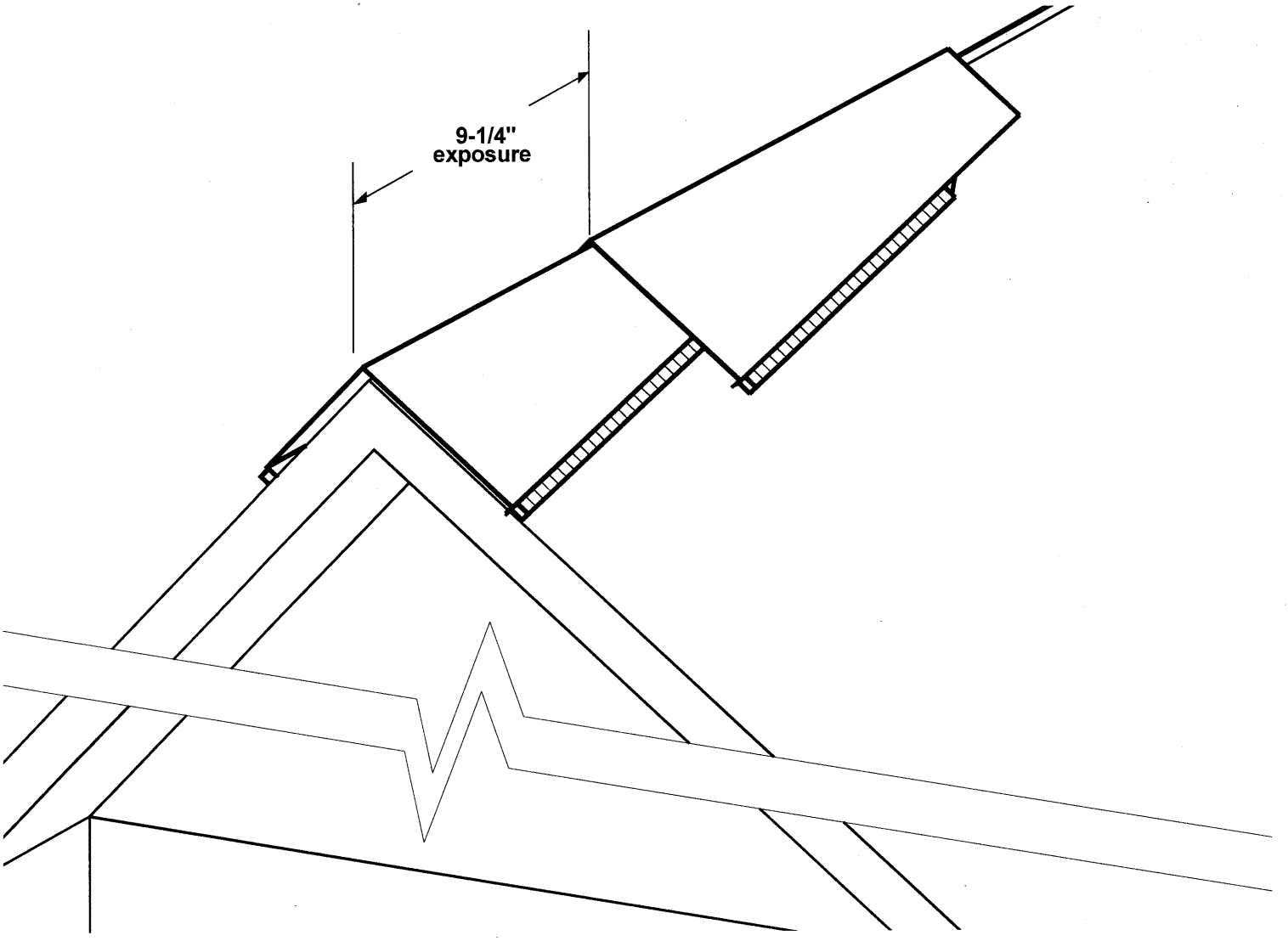

VENTED RIDGECREST INSTALLATION

DETAIL B
OVERALL DIMENSIONS AND NAILING PATTERN

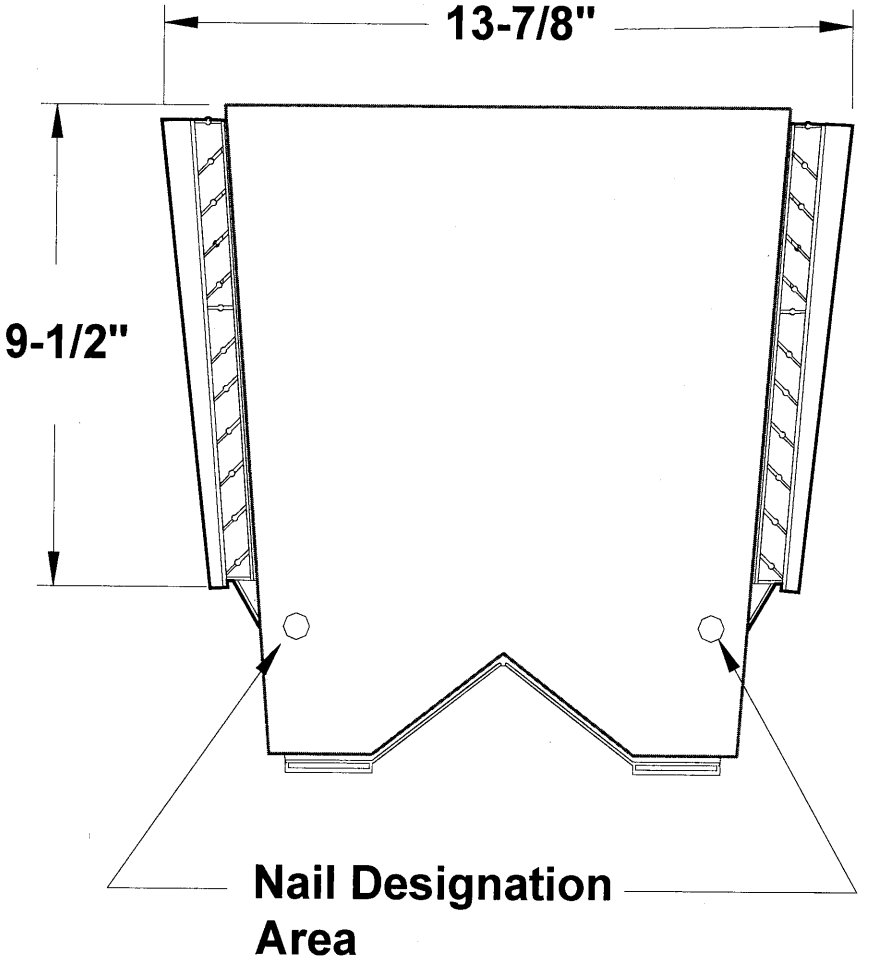

VENTED RIDGECREST
TOP VIEW

END OF THIS ACCEPTANCE