MIAMI-DADE COUNTY
BUILDING AND NEIGHBORHOOD COMPLIANCE DEPARTMENT (BNC)
BOARD AND CODE ADMINISTRATION DIVISION

MIAMI-DADE COUNTY
PRODUCT CONTROL SECTION
11805 SW 26 Street, Room 208
Miami, Florida 33175-2474
T (786) 315-2590 F (786) 315-2599
www.miamidade.gov/building/home/asp

NOTICE OF ACCEPTANCE (NOA)

Oldcastle BuildingEnvelope™
803 Airport Road
Terrell, TX 75160

SCOPE:

This NOA is being issued under the applicable rules and regulations governing the use of construction materials. The documentation submitted has been reviewed by Miami-Dade County Product Control Section and accepted by the Board of Rules and Appeals (BORA) to be used in Miami Dade County and other areas where allowed by the Authority Having Jurisdiction (AHJ).

This NOA shall not be valid after the expiration date stated below. The Miami-Dade County Product Control Section (In Miami Dade County) and/or the AHJ (in areas other than Miami Dade County) reserve the right to have this product or material tested for quality assurance purposes. If this product or material fails to perform in the accepted manner, the manufacturer will incur the expense of such testing and the AHJ may immediately revoke, modify, or suspend the use of such product or material within their jurisdiction. BORA reserves the right to revoke this acceptance, if it is determined by Miami-Dade County Product Control Section that this product or material fails to meet the requirements of the applicable building code. This product is approved as described herein, and has been designed to comply with the Florida Building Code, including the High Velocity Hurricane Zone.

DESCRIPTION: Series "HR-251 SSG Captured" Aluminum Curtain Wall System – L.M.I.

APPROVAL DOCUMENT: Drawing No. **10-014**, titled "HR-251 SSG Captured Curtain Wall System Large & Small Missile with Insulating Laminated Glass", sheets 1 through 33 of 33, dated 01/14/10, with revision #1 dated 01/04/11, prepared by Tilteco, Inc., signed and sealed by Walter A. Tillit, Jr., P.E., bearing the Miami-Dade County Product Control Approval stamp with the Notice of Acceptance number and approval date by the Miami-Dade County Product Control Section.

MISSILE IMPACT RATING: Large and Small Missile Impact Resistant

LABELING: Each unit shall bear a permanent label with the manufacturer's name or logo, city, state and following statement: "Miami-Dade County Product Control Approved", unless otherwise noted herein.

RENEWAL of this NOA shall be considered after a renewal application has been filed and there has been no change in the applicable building code negatively affecting the performance of this product.

TERMINATION of this NOA will occur after the expiration date or if there has been a revision or change in the materials, use, and/or manufacture of the product or process. Misuse of this NOA as an endorsement of any product, for sales, advertising or any other purposes shall automatically terminate this NOA. Failure to comply with any section of this NOA shall be cause for termination and removal of NOA.

ADVERTISEMENT: The NOA number preceded by the words Miami-Dade County, Florida, and followed by the expiration date may be displayed in advertising literature. If any portion of the NOA is displayed, then it shall be done in its entirety.

INSPECTION: A copy of this entire NOA shall be provided to the user by the manufacturer or its distributors and shall be available for inspection at the job site at the request of the Building Official.

This NOA consists of this page 1 and evidence pages E-1, E-2, E-3 and E-4, as well as approval document mentioned above.

The submitted documentation was reviewed by **Manuel Perez, P.E.**

MIAMI-DADE COUNTY APPROVED

NOA No. 10-0331.07
Expiration Date: February 17, 2016
Approval Date: February 17, 2011

NOTICE OF ACCEPTANCE: EVIDENCE SUBMITTED

A. DRAWINGS

1. Manufacturer's die drawings and sections.
2. Drawing No. **10-014**, Sheets 1 through 33 of 33, titled "HR-251 SSG Captured Curtain Wall System Large & Small Missile with Insulating Laminated Glass", dated 01/14/10, with revision #1 dated 01/04/11, prepared by Tilteco, Inc., signed and sealed by Walter A. Tillit, Jr., P.E.

B. TESTS

1. Test reports on: 1) Air Infiltration Test, per FBC, TAS 202-94
   2) Uniform Static Air Pressure Test, Loading per FBC TAS 202-94
   3) Water Resistance Test, per FBC, TAS 202-94
   4) Large Missile Impact Test per FBC, TAS 201-94
   5) Cyclic Wind Pressure Loading per FBC, TAS 203-94

   along with marked-up drawings and installation diagram of Vistawall HR-251 SSG single-span, steel reinforced, captured curtain wall system, prepared by Hurricane Test Laboratory, LLC, Test Report No. **HTL-0105-0903-08**, specimen **#E2**, dated 12/15-17/08, signed and sealed by Vinu J. Abraham, P.E.
2. Test reports on: 1) Air Infiltration Test, per FBC, TAS 202-94
   2) Uniform Static Air Pressure Test, Loading per FBC TAS 202-94
   3) Water Resistance Test, per FBC, TAS 202-94
   4) Small Missile Impact Test per FBC, TAS 201-94
   5) Large Missile Impact Test per FBC, TAS 201-94
   6) Cyclic Wind Pressure Loading per FBC, TAS 203-94

   along with marked-up drawings and installation diagram of Vistawall HR-251 SSG twin-span, steel reinforced, captured curtain wall system, prepared by Hurricane Test Laboratory, LLC, Test Report No. **HTL-0105-0903-08**, specimen **#E6**, dated 09/18-10/08, 2008, signed and sealed by Vinu J. Abraham, P.E.
3. Test reports on: 1) Large Missile Impact Test per FBC, TAS 201-94
   2) Cyclic Wind Pressure Loading per FBC, TAS 203-94

   along with marked-up drawings and installation diagram of Vistawall HR-251 SSG single-span, steel reinforced, captured curtain wall system, prepared by Hurricane Test Laboratory, LLC, Test Report No. **HTL-0105-0903-08**, specimen **#E6A**, dated 12/18/08, signed and sealed by Vinu J. Abraham, P.E.
4. Test reports on: 1) Uniform Static Air Pressure Test, Loading per FBC TAS 202-94
   2) Large Missile Impact Test per FBC, TAS 201-94
   3) Cyclic Wind Pressure Loading per FBC, TAS 203-94

   along with marked-up drawings and installation diagram of Vistawall HR-251 SSG single-span, non-reinforced, captured curtain wall system, prepared by Hurricane Test Laboratory, LLC, Test Report No. **HTL-0105-0903-08**, specimen **#E8**, dated 12/15-16/08, signed and sealed by Vinu J. Abraham, P.E.

Manuel Perez, P.E.
Product Control Examiner
NOA No. 10-0331.07
Expiration Date: February 17, 2016
Approval Date: February 17, 2011

B. TESTS (CONTINUED)

5. Test reports on: 1) Air Infiltration Test, per FBC, TAS 202-94
2) Uniform Static Air Pressure Test, Loading per FBC TAS 202-94
3) Water Resistance Test, per FBC, TAS 202-94
4) Large Missile Impact Test per FBC, TAS 201-94
5) Cyclic Wind Pressure Loading per FBC, TAS 203-94
along with marked-up drawings and installation diagram of Vistawall HR-251 SSG twin-span, steel reinforced, captured curtain wall system, prepared by Hurricane Test Laboratory, LLC, Test Report No. **HTL-0105-0117-05**, specimen **#1**, dated 04/07-23/05, signed and sealed by Vinu J. Abraham, P.E.

6. Test reports on: 1) Air Infiltration Test, per FBC, TAS 202-94
2) Uniform Static Air Pressure Test, Loading per FBC TAS 202-94
3) Water Resistance Test, per FBC, TAS 202-94
4) Large Missile Impact Test per FBC, TAS 201-94
5) Cyclic Wind Pressure Loading per FBC, TAS 203-94
along with marked-up drawings and installation diagram of Vistawall HR-251 SSG single-span, non-reinforced, captured curtain wall system, prepared by Hurricane Test Laboratory, LLC, Test Report No. **HTL-0105-0117-05**, specimen **#E3**, dated 09/08-13/05, signed and sealed by Vinu J. Abraham, P.E.

7. Test reports on: 1) Air Infiltration Test, per FBC, TAS 202-94
2) Uniform Static Air Pressure Test, Loading per FBC TAS 202-94
3) Water Resistance Test, per FBC, TAS 202-94
4) Large Missile Impact Test per FBC, TAS 201-94
5) Cyclic Wind Pressure Loading per FBC, TAS 203-94
along with marked-up drawings and installation diagram of Vistawall HR-251 SSG twin-span, steel reinforced, captured curtain wall system, prepared by Hurricane Test Laboratory, LLC, Test Report No. **HTL-0105-0177-05**, specimen **#E4**, dated 09/09-13/05, signed and sealed by Vinu J. Abraham, P.E.

8. Test reports on: 1) Air Infiltration Test, per FBC, TAS 202-94
2) Uniform Static Air Pressure Test, Loading per FBC TAS 202-94
3) Large Missile Impact Test per FBC, TAS 201-94
4) Cyclic Wind Pressure Loading per FBC, TAS 203-94
along with marked-up drawings and installation diagram of Vistawall HR-251 SSG single span, unreinforced, captured curtain wall system, prepared by Hurricane Test Laboratory, LLC, Test Report No. **HTL-0105-0177-05**, specimen **#E5**, dated 05/10-11/05, signed and sealed by Vinu J. Abraham, P.E.

Manuel Perez, P.E.
Product Control Examiner
NOA No. 10-0331.07
Expiration Date: February 17, 2016
Approval Date: February 17, 2011

NOTICE OF ACCEPTANCE: EVIDENCE SUBMITTED

B. TESTS (CONTINUED)

9. Test reports on: 1) Uniform Static Air Pressure Test, Loading per FBC TAS 202-94
2) Large Missile Impact Test per FBC, TAS 201-94
3) Cyclic Wind Pressure Loading per FBC, TAS 203-94
along with marked-up drawings and installation diagram of Vistawall MSD-375 doors, 72" x 96", prepared by Hurricane Test Laboratory, LLC, Test Report No. **HTL-0105-0210-04**, specimen **#E-1**, dated 02/09/04, signed and sealed by Vinu J. Abraham, P.E.

10. Test reports on: 1) Small Missile Impact Test per FBC, TAS 201-94
2) Cyclic Wind Pressure Loading per FBC, TAS 203-94
along with marked-up drawings and installation diagram of Vistawall HR-251 single-span, reinforced, captured curtain wall system, prepared by Architectural Testing, Inc., Test Report No. **ATITX-96930.01-801-18**, specimens **#1 & #2**, dated 02/15/10, signed and sealed by Joseph A. Reed, P.E. ***(For Reference Only)***

11. Test reports on: 1) Air Infiltration Test, per FBC, TAS 202-94
2) Uniform Static Air Pressure Test, Loading per FBC TAS 202-94
3) Water Resistance Test, per FBC, TAS 202-94
4) Large Missile Impact Test per FBC, TAS 201-94
5) Cyclic Wind Pressure Loading per FBC, TAS 203-94
along with marked-up drawings and installation diagram of Vistawall HR-251 wet glazed, steel reinforced, captured curtain wall system, prepared by Architectural Testing, Inc., Test Report No. **ATITX-A4707.01-801-18**, dated 11/16/10, signed and sealed by Shawn G. Collins, P.E. ***(For Reference Only)***

C. CALCULATIONS

1. Anchor verification calculations and structural analysis, complying with FBC-2007, prepared by Tilteco, Inc., dated 1/14/10, and additional complementary calculations, dated 06/02/10, all signed and sealed by Walter A. Tillit, Jr., P.E.

2. Glazing complies with ASTM E1300-04

D. QUALITY ASSURANCE

1. Miami-Dade Building and Neighborhood Compliance Department (BNC).

E. MATERIAL CERTIFICATIONS

1. Notice of Acceptance No. **06-0216.06** issued to **Solutia, Inc.** for their "**Saflex IIIG Clear or colored Interlayer**" dated 05/04/06, expiring on 05/21/11.

2. Notice of Acceptance No. **08-0520.08** issued to Solutia Inc. for their "**Vanceva Composites Glass Interlayer**" dated 7/17/08, expiring on 12/11/13.

Manuel Perez, P.E.
Product Control Examiner
NOA No. 10-0331.07
Expiration Date: February 17, 2016
Approval Date: February 17, 2011

NOTICE OF ACCEPTANCE: EVIDENCE SUBMITTED

F. STATEMENTS

1. Statement letter of conformance, dated March 22, 2010, signed and sealed by Walter A. Tillit, Jr., P.E.
2. Statement letter of no financial interest, dated March 22, 2010, signed and sealed by Walter A. Tillit, Jr., P.E.
3. Laboratory compliance letter for Test Report No. **HTL-0105-0117-05, specimens 1, E4** and **E5**, issued by Hurricane Test Laboratory, Inc., dated 4/04/08, signed and sealed by Vinu J. Abraham, P.E.
4. Laboratory compliance letter for Test Report No. **HTL-0105-0117-05, specimen E3**; and Test Report No. **HTL-0105-0903-08, specimens: E2, E6, E6A**, and **E8**, issued by Hurricane Test Laboratory, Inc., dated 3/23/09, signed and sealed by Vinu J. Abraham, P.E.
5. Legal statement certifying asset purchase agreement of the Vistawall Division of ™™Butler Manufacturing Products, Moduline Windows, Inc., by Oldcastle Windows, Inc. which later changed name to Oldcastle Glass Engineered Products, Inc., dated March 05, 2010, signed by Ms. Mollie L. Hines, Vice President and Secretary, Oldcastle Windows, Inc.
6. Legal statement of transfer of assets agreement from Oldcastle Engineered Products, Inc. to Oldcastle BuildingEnvelope™, dated October 19, 2010, signed by Ms. Jacqueline D. Butler, Corporate Paralegal/Legal Assistant.

G. OTHERS

1. None

Manuel Perez, P.E.
Product Control Examiner
NOA No. 10-0331.07
Expiration Date: February 17, 2016
Approval Date: February 17, 2011

PRODUCT APPROVAL FOR HR-251 SSG IMPACT-RESISTANT CAPTURED CURTAIN WALL SYSTEM WITH INSULATING LAMINATED GLASS FOR USE IN HURRICANE ZONES REQUIRING LARGE AND SMALL MISSILE IMPACT PROTECTION.

GENERAL NOTES:

1. HR-251 SSG CAPTURED CURTAIN WALL SYSTEM LARGE AND SMALL MISSILE WITH INSULATING LAMINATED GLASS, SHOWN ON THIS PRODUCT APPROVAL DOCUMENT (P.A.D.) HAS BEEN VERIFIED FOR COMPLIANCE IN ACCORDANCE WITH THE 2007 EDITION OF THE FLORIDA BUILDING CODE.
   CURTAIN WALL MAY BE INSTALLED WITHIN HIGH VELOCITY HURRICANE ZONES.
   DESIGN WIND LOADS SHALL BE DETERMINED AS PER SECTION 1620 OF THE ABOVE MENTIONED CODE. IN ORDER TO VERIFY THAT ANCHORS ON THIS P.A.D., AS TESTED, WERE NOT OVERSTRESSED, A 33% INCREASE IN ALLOWABLE STRESS FOR WIND LOADS WAS **NOT** USED IN THEIR ANALYSIS.
   THIS PRODUCT'S ADEQUACY FOR IMPACT AND WIND RESISTANCE HAS BEEN VERIFIED IN ACCORDANCE WITH SECTION 1626 OF THE ABOVE MENTIONED CODE AS PER PROTOCOLS TAS-201, TAS-202, TAS-203, PER HURRICANE TEST LABORATORY REPORTS # 0105-0117-05 AND 0105-0210-04 (DOOR JAMB MULLION CERTIFICATION) AND PER ARCHITECTURAL TESTING LAB REPORT #A4707.01-801-18 AND AS PER SUBMITTED STRUCTURAL CALCULATIONS, PERFORMED AS PER SECTION 1612 OF THE FLORIDA BUILDING CODE.

2. MAXIMUM DESIGN PRESSURE RATING FOR THIS CURTAIN WALL SHALL BE AS SHOWN ON SHEETS 8, 9, 10, 12, 13 14 & 15.

3. THIS PRODUCT IS RATED FOR LARGE AND SMALL MISSILE IMPACT RESISTANCE. HURRICANE PROTECTION DEVICE IS NOT REQUIRED.

4. THIS PRODUCT IS APPROVED FOR AIR/WATER INFILTRATION (15.0 PSF WATER PRESSURE).

5. HR-251 SSG CAPTURED CURTAIN WALL SYSTEM LARGE AND SMALL MISSILE WITH INSULATING LAMINATED GLASS SHALL COMPLY WITH SECTIONS 2411.4.1 AND 2411.4.2 OF THE FLORIDA BUILDING CODE.

6. ALL JOINT WELDING BETWEEN ANGLES AND STEEL STRUCTURE SHALL BE 3/16" FILLET WELD TYPE AND SHALL BE WELDED IN ACCORDANCE WITH THE AMERICAN WELDING SOCIETY A.W.S. D.1.1 REGULATIONS. USE CERTIFIED WELDERS. USE E-70XX ELECTRODES.

7. PROVIDE 3/4" MAX. LOAD BEARING SHIM (TYP.), WHEN ALLOWED BY THIS P.A.D.

8. SEE ANCHOR SCHEDULES ON SHEETS 12 THRU 15 FOR ANCHOR TYPE IDENTIFICATION AND SPACING.

9. REMAINING COMPONENTS FOR THIS CURTAIN WALL SYSTEM SHALL BE AS INDICATED ON BILL OF MATERIALS, SHEETS 4 AND 5 OF THIS DRAWING.

10. ALL ALUMINUM EXTRUSIONS IN CONTACT WITH STEEL AND CONCRETE SHALL COMPLY WITH SECTIONS 2003.8.4.2 AND 2003.8.4.4 OF THE FLORIDA BUILDING CODE, RESPECTIVELY.

11. SHOP DRAWINGS PREPARED BASED ON THIS P.A.D. AND TAKING INTO ACCOUNT THE SPECIFIC JOB CONDITIONS, SHALL BE SUBMITTED TO THE BUILDING OFFICIAL AS PART OF THE PERMIT DOCUMENTS.

12. STRUCTURAL STEEL NOTED ON THESE DRAWINGS AS "STEEL BY OTHERS" OR CONCRETE & GROUTED CELL CONCRETE BLOCK MUST WITHSTAND THE LOADS IMPOSED BY THE CURTAIN WALL SYSTEM.

13. STRUCTURAL SUBSTRATES NOTED ON THIS DRAWING AS EXISTING STEEL BY OTHERS, POURED CONCRETE AND GROUT FILLED CONCRETE BLOCK MUST SUSTAIN THE LOADS IMPOSED BY THIS PRODUCT.

14. (a) THIS P.A.D. PREPARED BY THIS ENGINEER IS GENERIC AND DOES NOT PROVIDE INFORMATION FOR A SITE SPECIFIC PROJECT; i.e. WHERE THE SITE CONDITIONS DEVIATE FROM THE P.A.D.

    (b) CONTRACTOR TO BE RESPONSIBLE FOR THE SELECTION, PURCHASE AND INSTALLATION INCLUDING LIFE SAFETY OF THIS PRODUCT, BASED ON THIS P.A.D., PROVIDED HE/SHE DOES NOT DEVIATE FROM THE CONDITIONS DETAILED ON THIS DOCUMENT. CONSTRUCTION SAFETY AT SITE IS THE CONTRACTOR'S RESPONSIBILITY.

    (c) THIS P.A.D. WILL BE CONSIDERED INVALID IF ALTERED BY ANY MEANS.

    (d) SITE SPECIFIC PROJECTS SHALL BE PREPARED BY A FLORIDA REGISTERED ENGINEER OR ARCHITECT WHICH WILL BECOME THE ENGINEER OF RECORD (E.O.R.) FOR THE PROJECT AND WHO WILL BE RESPONSIBLE FOR THE PROPER USE OF THE P.A.D. ENGINEER OF RECORD, ACTING AS DELEGATED ENGINEER TO THE P.A.D. ENGINEER, SHALL SUBMIT TO THIS LATTER THE SITE SPECIFIC DRAWINGS FOR REVIEW.

    (e) ORIGINAL P.A.D. SHALL BEAR THE DATE AND ORIGINAL SEAL AND SIGNATURE OF THE PROFESSIONAL ENGINEER OF RECORD THAT PREPARED IT.

15. CURTAIN WALL MANUFACTURER'S LABEL SHALL BE PLACED ON A READILY VISIBLE LOCATION. ONE LABEL SHALL BE PLACED FOR EVERY UNIT. LABEL SHALL READ AS FOLLOWS:

    Oldcastle
    BuildingEnvelope™
    TERRELL TX.
    MIAMI-DADE COUNTY PRODUCT CONTROL APPROVED.

INDEX:

SHEET 1: GENERAL NOTES, INDEX AND INSTRUCTIONS.
SHEET 2: HR-251 SSG CAPTURED CURTAIN WALL SYSTEM LARGE & SMALL MISSILE W/ INSULATING LAMINATED GLASS COMPONENTS.
SHEET 3: HR-251 SSG CAPTURED CURTAIN WALL SYSTEM LARGE & SMALL MISSILE W/ INSULATING LAMINATED GLASS COMPONENTS (CONTINUED).
SHEET 4: BILL OF MATERIALS.
SHEET 5: BILL OF MATERIALS (CONTINUED).
SHEET 6: ISOMETRIC ELEVATION FOR HR-251 SSG CAPTURED CURTAIN WALL SYSTEM LARGE & SMALL MISSILE W/ INSULATING LAMINATED GLASS.
SHEET 7: TYPICAL GLAZING DETAILS.
SHEET 8: MAXIMUM DESIGN WIND LOAD SCHEDULE FOR A GIVEN GLASS TYPE AND GLASS PANEL DIMENSIONS.
SHEET 9: MAX. DESIGN PRESSURE RATING FOR SINGLE SPAN SSG AND CORNER MULLIONS.
SHEET 10: MAX. DESIGN PRESSURE RATING FOR TWIN SPAN SSG AND CORNER MULLIONS.
SHEET 11: OPTIONS FOR TWIN SPAN SSG AND CORNER MULLIONS INSTALLATION.
SHEET 12: MAXIMUM PRESSURE RATING FOR SINGLE SPAN (HEAD & SILL) & TWIN SPAN (SILL ONLY) MULLION CONNECTIONS.
SHEET 13: MAXIMUM PRESSURE RATING FOR TWIN SPAN MULLION HEAD ANCHOR CONNECTIONS.
SHEET 14: MAXIMUM PRESSURE RATING FOR JAMBS AT SINGLE SPAN CURTAIN WALL FASTENED W/ 3/8"ø & 1/2"ø FASTENERS.
SHEET 15: MAXIMUM PRESSURE RATING FOR JAMBS AT TWIN SPAN CURTAIN WALL FASTENED W/ 3/8"ø & 1/2"ø FASTENERS.
SHEET 16: HEAD CONNECTION DETAILS (SIDE VIEWS).
SHEET 17: HORIZONTAL CONNECTION DETAILS (SIDE VIEWS) & SILL CONNECTION DETAILS (SIDE VIEWS).
SHEET 18: HORIZONTAL SECTIONS AT SSG MULLION DETAILS (PLAN).
SHEET 19: JAMB CONNECTIONS AT HORIZONTALS (PLAN).
SHEET 20: CORNER MULLION DETAILS (PLAN).
SHEET 21: JAMBS CONNECTIONS AT INSIDE CORNER (PLAN).
SHEET 22: SILL & HEAD CONNECTION DETAILS FOR SINGLE SPAN & SILL CONNECTION DETAIL AT TWIN SPAN (PLANS).
SHEET 23: OPTION #1 FOR HEAD CONNECTION OF TWIN SPAN SSG MULLIONS.
SHEET 24: OPTION #2 FOR HEAD CONNECTION OF TWIN SPAN SSG MULLIONS.
SHEET 25: HEAD CONNECTION AT TWIN SPAN JAMBS.
SHEET 26: HEAD CONNECTION DETAIL FOR TWIN SPAN CORNER MULLION,
SHEET 27: MULLION AND JAMB SPLICES AT TWIN SPAN ONLY (PLAN).
SHEET 28: MULLION AND JAMB SPLICES AT TWIN SPAN ONLY (SIDE VIEW)
SHEET 29: CORNER MULLION SPLICE FOR TWIN SPAN ONLY (PLAN).
SHEET 30: SSG AND CORNER MULLIONS CONNECTION TO EXISTING INTERMEDIATE FLOOR STRUCTURE W/ DEAD OR WIND LOAD ANCHORS.
SHEET 31: CORNER MULLION CONNECTION TO EXISTING INTERMEDIATE FLOOR STRUCTURE W/ DEAD OR WIND LOAD ANCHORS (PLAN).
SHEET 32: DOOR HEADER CONNECTION TO CURTAIN WALL HORIZONTALS AND DOOR SILL CONNECTION TO POURED STRUCTURE AND TO ADJACENT CURTAIN WALL DOOR JAMB MULLION.
SHEET 33: DOOR JAMBS CONNECTION TO CURTAIN WALL.

INSTRUCTIONS:

STEP 1: DETERMINE DESIGN WIND LOAD REQUIREMENTS BASED ON WIND VELOCITY, BUILDING HEIGHT, WIND ZONE, USING APPLICABLE ASCE 7-05 STANDARD.

STEP 2: GO TO SCHEDULE ON SHEET 8 TO DETERMINE MAXIMUM DESIGN PRESSURE RATING "W" (psf) OF DESIRED GLASS SIZE BASED ON GLASS PANEL DIMENSIONS.

STEP 3: DETERMINE MAXIMUM MULLION AND JAMB SPAN "L"(FT) FOR A GIVEN MULLION EFFECTIVE SPACING "b", FOR SINGLE AND TWIN SPANS ON SCHEDULES ON SHEETS 9 AND 10.

STEP 4: USING SCHEDULES ON SHEETS 12 THRU 15 SELECT ANCHOR OPTION FOR MULLIONS AND JAMBS WITH DESIGN PRESSURE RATING EQUAL OR GRATER THAN DESIGN LOAD SPECIFIED IN STEP 1.

STEP 5: THE LOWEST VALUE OF DESIGN PRESSURE RATING RESULTING FROM STEPS 2, 3 & 4 SHALL APPLY TO THE ENTIRE SYSTEM.

FLORIDA BUILDING CODE (High Velocity Hurricane Zone)

M.C.V. DRAWN BY

01/14/10 DATE

10-014 DRAWING No

SHEET 1 OF 33

HR-251 SSG CAPTURED CURTAIN WALL SYSTEM LARGE & SMALL MISSILE WITH INSULATING LAMINATED GLASS

Oldcastle BuildingEnvelope™
803 Airport Rd - Terrell, TX 75160
www.OldcastleBE.com - Phone 800-869-4567

REV. No.	DESCRIPTION	DATE	REV. No.	DESCRIPTION	DATE
1	GENERAL	01/04/11	-	-	-
-	-	-	-	-	-

©2010 TILTECO, INC

TILTECO INC.
TILLIT TESTING & ENGINEERING COMPANY
6355 N.W. 36th. St., Ste. 305, VIRGINIA GARDENS, FL 33166
Phone : (305)871-1530 . Fax : (305)871-1531
e-mail: tilteco@aol.com
EB-0006719
WALTER A. TILLIT Jr, P.E.
FLORIDA Lic. # 44167

WALTER A. TILLIT JR. LICENSE No. 44167 STATE OF FLORIDA PROFESSIONAL ENGINEER

P.E. SEAL/SIGNATURE/DATE

PRODUCT REVISED as complying with the Florida Building Code
Acceptance No 10-0331.07
Expiration Date FEB 17, 2016
By Miami-Dade Product Control

MIAMI-DADE COUNTY

HR-251 SSG CAPTURED CURTAIN WALL SYSTEM LARGE & SMALL MISSILE W/ INSULATING LAMINATED GLASS COMPONENTS

SCALE : 1/4" = 1" (EXCEPT AS NOTED)

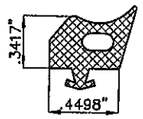

① EXTERIOR GLAZING GASKET
GP-118
SCALE : 1" = 1"

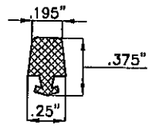

② INTERIOR SPACER GASKET
FG-5185
SCALE : 1" = 1"

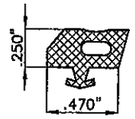

④ EXTERIOR PERIMETER GASKET
GP-103
SCALE : 1" = 1"

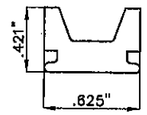

⑤ THERMAL ISOLATOR
CW-6H
SCALE : 1" = 1"

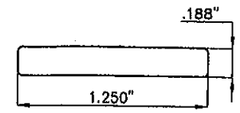

⑥ SETTING BLOCK
CW-2102
SCALE : 1" = 1"

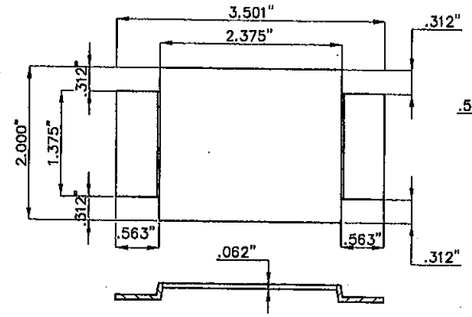

㉝ MULLION END CAP
HR-FP-4
SCALE : 1/2" = 1"

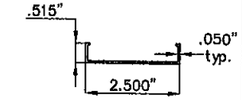

⑫ FACE CAP
CW-2

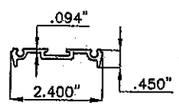

⑬ PRESSURE BAR
ZG-60

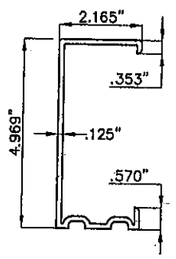

⑭ JAMB MULLION SPLICE
CW-1991

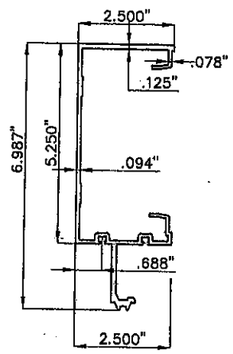

⑮ JAMB MULLION
CW-2023

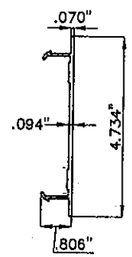

⑯ MULLION FILLER
CW-1996

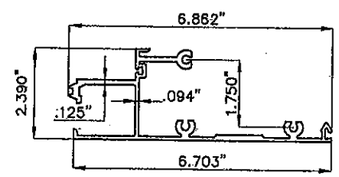

⑰ HEAD/SILL
CW-2024

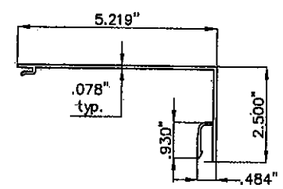

⑱ HEAD/SILL/HORIZONTAL TRIM
CW-1998

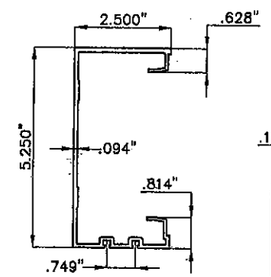

⑲ SSG MULLION
CW-1999

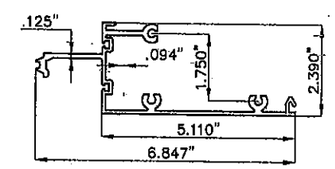

⑳ OPEN BACK HORIZONTAL
CW-2156

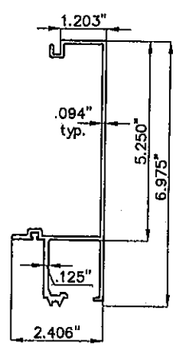

㉑ TWO PIECE JAMB
FEMALE HALF
CW-2026

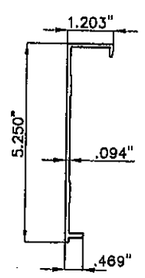

㉒ TWO PIECE JAMB
MALE HALF
CW-2002

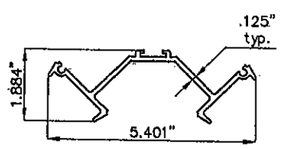

㉓ CORNER PRESSURE PLATE
CW-2183

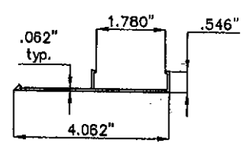

㉔ CORNER FACE CAP
CW-2188

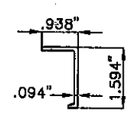

㉕ POCKET FILLER
CW-691

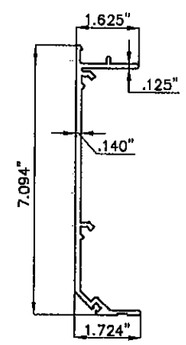

㉖ CORNER MULLION
FEMALE HALF
CW-2018

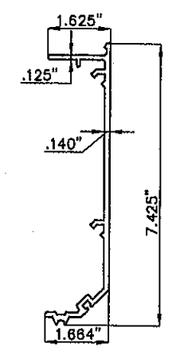

㉗ CORNER MULLION
MALE HALF
CW-2019

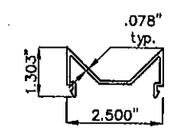

㉘ MULLION FILLER
CW-2020

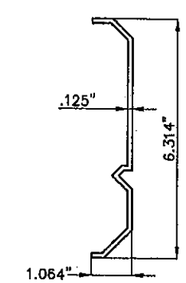

㉙ CORNER SPLICE
CW-2021

FLORIDA BUILDING CODE (High Velocity Hurricane Zone)

©2010 TILTECO, INC

M.C.V.
DRAWN BY

01/14/10
DATE

10-014
DRAWING No

SHEET 2 OF 33

HR-251 SSG CAPTURED CURTAIN WALL SYSTEM LARGE & SMALL MISSILE WITH INSULATING LAMINATED GLASS

Oldcastle BuildingEnvelope™
803 Airport Rd - Terrell, TX 75160
www.OldcastleBE.com - Phone 800-869-4567

REV. No	DESCRIPTION	DATE	REV. No	DESCRIPTION	DATE
1	GENERAL	01/04/11	-	-	-
-	-	-	-	-	-

TILTECO INC.
TILLIT TESTING & ENGINEERING COMPANY
6305 N.W. 36th. St. Ste. 305, VIRGINIA GARDENS, FL 33166
Phone : (305)871-1530 . Fax : (305)871-1531
e-mail: tilteco@aol.com
EB-0006719
WALTER A. TILLIT Jr. P.E.
FLORIDA Lic. # 44167

WALTER A. TILLIT JR.
LICENSE
No. 44167
STATE OF FLORIDA
PROFESSIONAL ENGINEER

P.E. SEAL, SIGNATURE AND DATE

PRODUCT REVISED
as complying with the Florida Building Code
Acceptance No 10-0331.07
Expiration Date FEB 17 2016
By Manuel Perez
Miami-Dade Product Control

MIAMI-DADE COUNTY

HR-251 SSG CAPTURED CURTAIN WALL SYSTEM LARGE & SMALL MISSILE W/ INSULATING LAMINATED GLASS COMPONENTS (CONTINUED)

SCALE : 1/4" = 1" (EXCEPT AS NOTED)

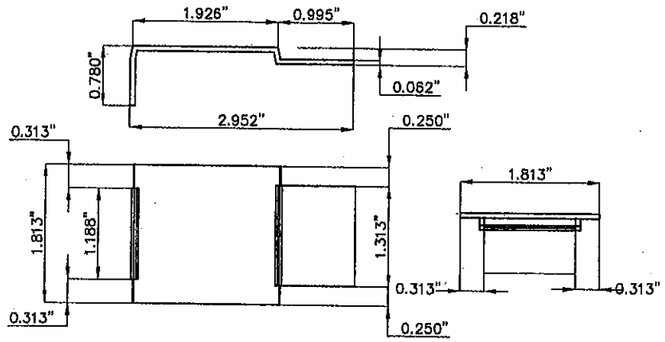

(30) LEFT & RIGHT JAMB END CAP HR-FP-5
SCALE : 1/2" = 1"

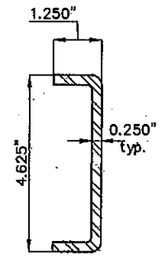

(31) STEEL REINFORCING FG5000-PP-8

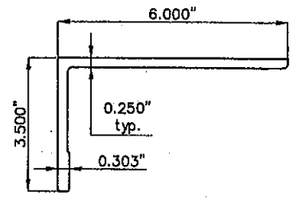

(33) HEAD ANCHOR LEFT HR-FP-24

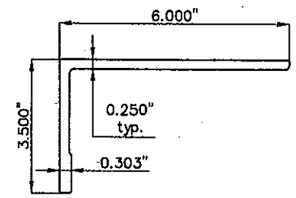

(33A) HEAD ANCHOR RIGHT HR-FP-25

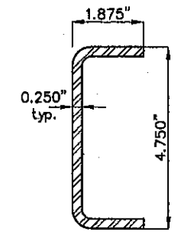

(34) STEEL REINFORCING RS-25

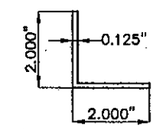

(35) EXTRUDED ANGLE AN-52

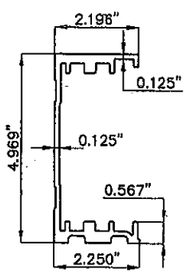

(36) HEAD ANCHOR SLEEVE HR-FP-15

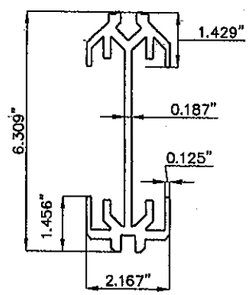

(37) HEAD ANCHOR SLEEVE CORNER HR-FP-17

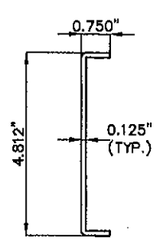

(38) BREAK METAL SPLICE HR-FP-13

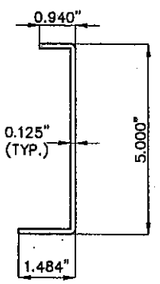

(39) BRAKE METAL SPLICE HR-FP-14

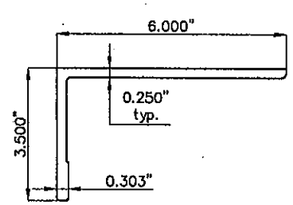

(44) HEAD ANCHOR CORNER LEFT HR-FP-22

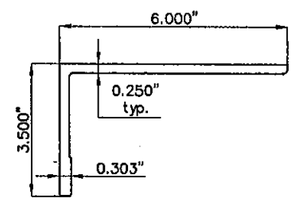

(45) HEAD ANCHOR CORNER RIGHT HR-FP-23

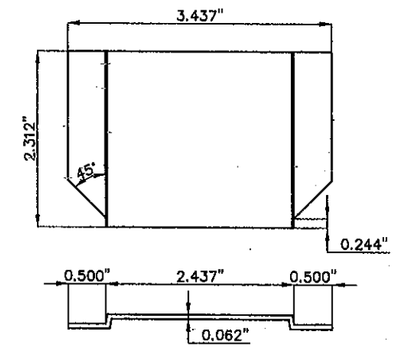

(47) 90 DEG. MULLION END CAP HR-FP-8
SCALE : 1/2" = 1"

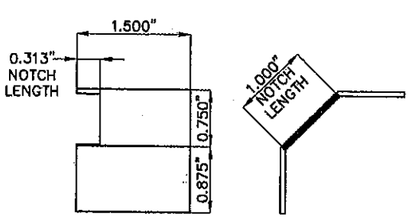

(48) WATER DIVERTER HR-FP-12

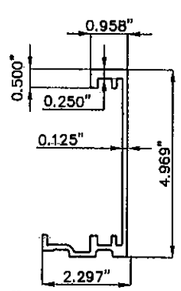

(50) JAMB HEAD ANCHOR SLEEVE HR-FP-16

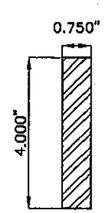

(52) STEEL REINFORCING RS-17

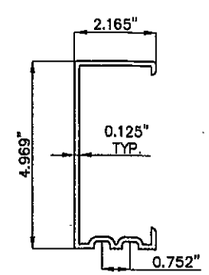

(61) SSG MULLION SPLICE

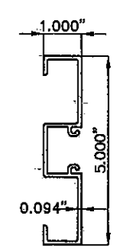

(62) DOOR JAMB D-226

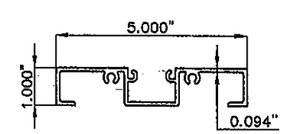

(62A) SUB-FRAME HEADER D-231

FLORIDA BUILDING CODE (High Velocity Hurricane Zone)

M.C.V. DRAWN BY	01/14/10 DATE
10-014 DRAWING No	SHEET 3 OF 33

HR-251 SSG CAPTURED CURTAIN WALL SYSTEM LARGE & SMALL MISSILE WITH INSULATING LAMINATED GLASS

Oldcastle BuildingEnvelope™
803 Airport Rd - Terrell, TX 75160
www.OldcastleBE.com - Phone 800-869-4567

REV. No.	DESCRIPTION	DATE
1	GENERAL	01/04/11
-	-	-

REV. No.	DESCRIPTION	DATE
-	-	-
-	-	-

©2010 TILTECO, INC

TILTECO INC.
TILLIT TESTING & ENGINEERING COMPANY
6355 N.W. 36th. St., Ste. 305, VIRGINIA GARDENS, FL 33166
Phone : (305)871-1530 . Fax : (305)871-1531
e-mail: titeco@aol.com
EB-0006719
WALTER A. TILLIT Jr. P.E.
FLORIDA Lic. # 44167

WALTER A. TILLIT JR. LICENSE No. 44167 STATE OF FLORIDA PROFESSIONAL ENGINEER

SIGNATURE DATE
P.E. SEAL

PRODUCT REVISED
as complying with the Florida Building Code
Acceptance No 10-0331.07
Expiration Date FEB.11.2016
By Miami-Dade Product Control

MIAMI-DADE COUNTY

BILL OF MATERIALS

ITEM No.	PART NUMBER	DESCRIPTION	DIMENSIONS	MATERIAL	MANUFACTURER	NOTES
1.	GP-118	EXTERIOR GLAZING GASKET	.342 X .450	VINYL	EPG	70 DUROMETER
2.	FG-5185	INTERIOR SPACER GASKET	.25 X .375	VINYL	EPG	
3.	DOW 995	STRUCTURAL SILICONE	FILL SPACE	SILICONE	DOW CORNING	
4.	GP-103	EXTERIOR PERIMETER GASKET	.150 X .470	VINYL	EPG	
5.	CW-6H	THERMAL ISOLATOR	.625 X .421	RIGID VINYL	OLDCASTLE BUILDINGENVELOPE	
6.	CW-2102	SETTING BLOCK	1.250 X .188 X 4" LONG	RIGID VINYL	EPG	
7.	HR-FP-4	MULLION END CAPS	3.5 X 2.00 X .062	RIGID VINYL	OLDCASTLE BUILDINGENVELOPE	SEE NOTE # 2 BELOW
8.	795	PERIMETER SEALANT	FILL SPACE	SILICONE	DOW CORNING	
9.	FS-8	SPLINE ASSEMBLY SCREW	#14 X 1 HHSTS FS-322 (STALGARD COATED BY ELCO)	STEEL	ELCO	
10.	FS-7	JAMB SCREW	#10 X 3/4" PFH TYPE B	STEEL	VARIES	(2)@ EA. HORIZ. 12" O.C.@ 2PC JAMB
11.	FS-322	PRESSURE PLATE SCREW	#12-14 X 1" HWH #3 FS-322 (STALGARD COATED BY ELCO)	STEEL	ELCO	(1) @ EA. 24" O.C.
12.	CW-2	FACE CAP	.515 X 2.5 X .050	6063-T6 ALUMINUM	OLDCASTLE BUILDINGENVELOPE	
13.	ZG-60	PRESSURE BAR	2.40 X .450 X .094	6063-T6 ALUMINUM	OLDCASTLE BUILDINGENVELOPE	SEE NOTE: # 1 BELOW
14.	CW-1991	JAMB MULLION SPLICE	2.16" X 4.96" X .125	6063-T6 ALUMINUM	OLDCASTLE BUILDINGENVELOPE	
15.	CW-2023	JAMB MULLION	2.50 X 6.987 X .094	6063-T6 ALUMINUM	OLDCASTLE BUILDINGENVELOPE	
16.	CW-1996	MULLION FILLER	.806 X 4.734 X .094	6063-T6 ALUMINUM	OLDCASTLE BUILDINGENVELOPE	
17.	CW-2024	HEAD/SILL	2.39 X 6.862 X .094	6063-T6 ALUMINUM	OLDCASTLE BUILDINGENVELOPE	
18.	CW-1998	HEAD/SILL/HORIZONTAL TRIM	2.50 X 5.219 X .078	6063-T6 ALUMINUM	OLDCASTLE BUILDINGENVELOPE	
19.	CW-1999	SSG MULLION	2.50 X 5.25 X .094	6063-T6 ALUMINUM	OLDCASTLE BUILDINGENVELOPE	
20.	CW-2156	HORIZONTAL	2.39 X 6.847 X .094	6063-T6 ALUMINUM	OLDCASTLE BUILDINGENVELOPE	
21.	CW-2026	TWO PIECES JAMB FEMALE HALF	6.975 X 2.406 X .094	6063-T6 ALUMINUM	OLDCASTLE BUILDINGENVELOPE	
22.	CW-2002	TWO PIECES JAMB MALE HALF	1.203 X 5.25 X .094	6063-T6 ALUMINUM	OLDCASTLE BUILDINGENVELOPE	
23.	CW-2183	CORNER PRESSURE PLATE	1.884 X 5.401 X .125	6063-T6 ALUMINUM	OLDCASTLE BUILDINGENVELOPE	
24.	CW-2188	CORNER FACE CAP	.546 X 4.062 X .062	6063-T5 ALUMINUM	OLDCASTLE BUILDINGENVELOPE	
25.	CW-691	POCKET FILLER	.938 X 1.594 X .094	6063-T5 ALUMINUM	OLDCASTLE BUILDINGENVELOPE	
26.	CW-2018	CORNER MULLION FEMALE HALF	1.724 X 7.094 X .140	6063-T6 ALUMINUM	OLDCASTLE BUILDINGENVELOPE	
27.	CW-2019	CORNER MULLION MALE HALF	1.724 X 7.094 X .140	6063-T6 ALUMINUM	OLDCASTLE BUILDINGENVELOPE	
28.	CW-2020	CORNER MULLION FILLER	1.302 X 2.50 X .078	6063-T5 ALUMINUM	OLDCASTLE BUILDINGENVELOPE	
29.	CW-2021	CORNER SPLICE	1.064 X 6.3147 X .125	6063-T6 ALUMINUM	OLDCASTLE BUILDINGENVELOPE	

NOTE #1: ALL VERTICAL PRESSURE PLATES SHALL BE CUT ¼" SHORT IN LENGTH TO ALLOW FOR WEEP SLOT

NOTE #2-BEAD OF DOW CORNING 995 SILICONE SHALL BE APPLIED TO FRAME SURFACE BEFORE PART IS INSTALLED

FLORIDA BUILDING CODE (High Velocity Hurricane Zone)

M.C.V.
DRAWN BY

01/14/10
DATE

10-014
DRAWING No

SHEET 4 OF 33

HR-251 SSG CAPTURED CURTAIN WALL
SYSTEM LARGE & SMALL MISSILE WITH
INSULATING LAMINATED GLASS

Oldcastle BuildingEnvelope™
803 Airport Rd - Terrell, TX 75160
www.OldcastleBE.com - Phone 800-869-4567

REV. No	DESCRIPTION	DATE
1	GENERAL	01/04/11

REV. No	DESCRIPTION	DATE
-	-	-
-	-	-
-	-	-

©2010 TILTECO, INC

TILTECO INC.
TILLIT TESTING & ENGINEERING COMPANY
6355 N.W. 36th, St., Ste. 305, VIRGINIA GARDENS, FL 33166
Phone : (305)871-1550 . Fax : (305)871-1531
e-mail: tilteco@aol.com
EB-0006719
WALTER A. TILLIT Jr. P.E.
FLORIDA Lic. # 44167

WALTER A. TILLIT JR.
LICENSE
No. 44167
STATE OF FLORIDA
PROFESSIONAL ENGINEER

P.E. SEAL/SIGNATURE/DATE

PRODUCT REVISED
as complying with the Florida
Building Code
Acceptance No 10-0331.07
Expiration Date FEB. 17, 2016
By Miami-Dade Product Control

MIAMI-DADE COUNTY

BILL OF MATERIALS (CONTINUED)

ITEM No.	PART NUMBER	DESCRIPTION	DIMENSIONS	MATERIAL	MANUFACTURER	NOTES
30.	HR-FP-5	LEFT AND RIGHT HAND JAMB END CAPS	2.96 X 0.78 X .062	RIGID VINYL	OLDCASTLE BUILDINGENVELOPE	SEE NOTE # 2 BELOW
31.	FG5000-PP-8	REINFORCING STEEL	4 5/8" X 1 1/4" X 1/4" CHANNEL	A36 STEEL	VARIES	USED @ VERTICAL CORNER MULLION, COAT ZINC RICH PRIMER
32.	FASTENER	STEEL REINFORCING ATTACHMENT BOLT	1/4-20 X 2" BOLT WITH WASHER AND NUT	STEEL	VARIES	ZINC COATED, PER ASTM B-633
33.	HR-FP-24	HEAD ANCHOR LEFT	3 1/2" x 6" x 4 1/4" LONG	6063-T6 ALUMINUM	OLDCASTLE BUILDINGENVELOPE	
33A.	HR-FP-25	HEAD ANCHOR RIGHT	3 1/2" x 6" x 4 1/4" LONG	6063-T6 ALUMINUM	OLDCASTLE BUILDINGENVELOPE	
34.	RS-25	REINFORCING STEEL	4 3/4" X 1 7/8" X 1/4" CHANNEL	A36 STEEL	VARIES	COAT ZINC RICH PRIMER
35.	AN-52	EXTRUDED ANGLE	2.00" X 2.00" X 1/8" ANGLE	6063-T6 ALUMINUM	OLDCASTLE BUILDINGENVELOPE	APPLY WITH DOUBLE SIDED TAPE
36.	HR-FP-15	HEAD ANCHOR SLEEVE	2 3/16" X 4 15/16" X X 2 1/2" LONG	6063-T6 ALUMINUM	OLDCASTLE BUILDINGENVELOPE	
37.	HR-FP-17	HEAD ANCHOR SLEEVE CORNER	2 3/16" X 6 3/16" X 3" LONG	6063-T6 ALUMINUM	OLDCASTLE BUILDINGENVELOPE	USED @ JAMBS
38.	HR-FP-13	BRAKE METAL SPLICE	.75 X 4.812 X .75 X .125 X 6" LONG	3030 ALUMINUM	OLDCASTLE BUILDINGENVELOPE	USED @ JAMBS
39.	HR-FP-14	BRAKE METAL SPLICE	.94 X 5.00 X 1.437 X .125 X 8" LONG	3030 ALUMINUM	OLDCASTLE BUILDINGENVELOPE	USED @ JAMBS
40.	FASTENER	ANCHOR BOLT	5/8-11 X 4 1/2" SAE GRD 5 BOLT, HEX NUT AND WASHER	STEEL	VARIES	ZINC COATED, PER ASTM B-633
41.	**	STEEL DEADLOAD ANCHOR	4" X 6" X 5/16" X 5" LONG	A36 STEEL	VARIES	ZINC COATED, PER ASTM B-633.
42.	**	SLIP PAD	4" X 4" X .063	VINYL	KORALATH	USED @ MID POINT ANCHORS
43.	FASTENER	JAMB ANCHOR BOLT	5/8-11 X 1 1/2" SAE GRD 5 BOLT	STEEL	VARIES	ZINC COATED, PER ASTM B-633
44.	HR-FP-22	CORNER HEAD ANCHOR LEFT	2.147" X 6.314" X .25"	6063-T6 ALUMINUM	OLDCASTLE BUILDINGENVELOPE	
45.	HR-FP-23	CORNER HEAD ANCHOR RIGHT	2.147" X 6.314" X .25"	6063-T6 ALUMINUM	OLDCASTLE BUILDINGENVELOPE	
46.	**	STEEL DEADLOAD ANCHOR @ CORNER	4" X 6" X 1/4" X 5" LONG	A36 STEEL	VARIES	
47.	HR-FP-8	90 DEG MULLION END CAP	4.615 X 3.195 X .062	RIGID VINYL	OLDCASTLE BUILDINGENVELOPE	TOP & BOTTOM OF MULLION SEE NOTE # 2 BELOW
48.	HR-FP-12	WATER DIVERTER	.0875 X 1.061 X .875	VINYL	OLDCASTLE BUILDINGENVELOPE	1.50 LONG SEE NOTE # 2 BELOW
49.	SM-5601	JOINT SEALANT TAPE	.125 X .750 X VARIES	BUTYL	SCHNEE-MOREHEAD	USED AT END OF INTERMEDIATE HORIZONTALS
50.	HR-FP-16	JAMB HEAD ANCHOR SLEEVE	2 3/16" X 5 5/16" X 5 1/8" LONG	6063-T6 ALUMINUM	OLDCASTLE BUILDINGENVELOPE	USED AT JAMBS
52.	RS-17	STEEL REINFORCING INCLUDES RS-25	3/4" X 4" STEEL BAR WITH RS-25	A36 STEEL	VARIES	USED AT DOOR MULLION
54.	FASTENER	STEEL REINFORCING ATTACHMENT BOLT	1/4-20 X 1 1/2" SAE GRADE 5 BOLT WITH WASHER AND NUT	STEEL	VARIES	THROUGH-BOLT @ INT HORIZONTALS
55.	HR-FP-10	BRIDGE	3.75 X 1.75 X .125	MOLDED PLASTIC	VARIES	
59.	FASTENER	ATTACHMENT BOLT	1/4-20 X 2 1/4" BOLT WITH WASHER AND NUT	STEEL	VARIES	ZINC COATED, PER ASTM B-633
60.	FASTENER	STEEL REINFORCING ATTACHMENT BOLT	1/4-20 X 3 1/2" SAE GRADE 5 BOLT WITH WASHER AND NUT	STEEL	VARIES	THROUGH-BOLT @ INT HORIZONTALS
61.	**	SSG MULLION SPLICE	4.969" X 2.500" X 0.125"	6063-T6 ALUMINUM	OLDCASTLE BUILDINGENVELOPE	
62.	D-226	DOOR JAMB	1.00" X 5.00" X .094"	6063-T6 ALUMINUM	OLDCASTLE BUILDINGENVELOPE	
62A.	D-231	SUB-FRAME HEADER	1.00" X 5.00" X .094"	6063-T6 ALUMINUM	OLDCASTLE BUILDINGENVELOPE	

** NO PART NUMBER ASSIGNED
NOTE #2-BEAD OF DOW CORNING 995 SILICONE SHALL BE APPLIED TO FRAME SURFACE BEFORE PART IS INSTALLED

FLORIDA BUILDING CODE (High Velocity Hurricane Zone)

HR-251 SSG CAPTURED CURTAIN WALL SYSTEM LARGE & SMALL MISSILE WITH INSULATING LAMINATED GLASS

M.C.V. DRAWN BY

01/14/10 DATE

10-014 DRAWING No

SHEET 5 OF 33

Oldcastle BuildingEnvelope™
803 Airport Rd - Terrell, TX 75160
www.OldcastleBE.com - Phone 800-869-4567

REV. No	DESCRIPTION	DATE	REV. No	DESCRIPTION	DATE
1	GENERAL	01/04/11	-	-	-
-	-	-	-	-	-

©2010 TILTECO, INC

TILTECO INC.
TILLIT TESTING & ENGINEERING COMPANY
6355 N.W. 36th. St., Ste. 305, VIRGINIA GARDENS, FL 33166
Phone : (305)871-1530 . Fax : (305)871-1531
e-mail: tilteco@aol.com
EB-0006719
WALTER A. TILLIT Jr. P.E.
FLORIDA Lic. # 44167

WALTER A. TILLIT JR. LICENSE No. 44167 STATE OF FLORIDA PROFESSIONAL ENGINEER

P.E. SEAL AND SIGNATURE DATE

PRODUCT REVISED
as complying with the Florida
Building Code
Acceptance No. 10-0331.07
Expiration Date Feb. 11, 2016
By Miami Dade Product Control

MIAMI-DADE COUNTY

ISOMETRIC ELEVATION FOR HR-251 SSG CAPTURED CURTAIN WALL SYSTEM LARGE & SMALL MISSILE W/ INSULATING LAMINATED GLASS

N.T.S

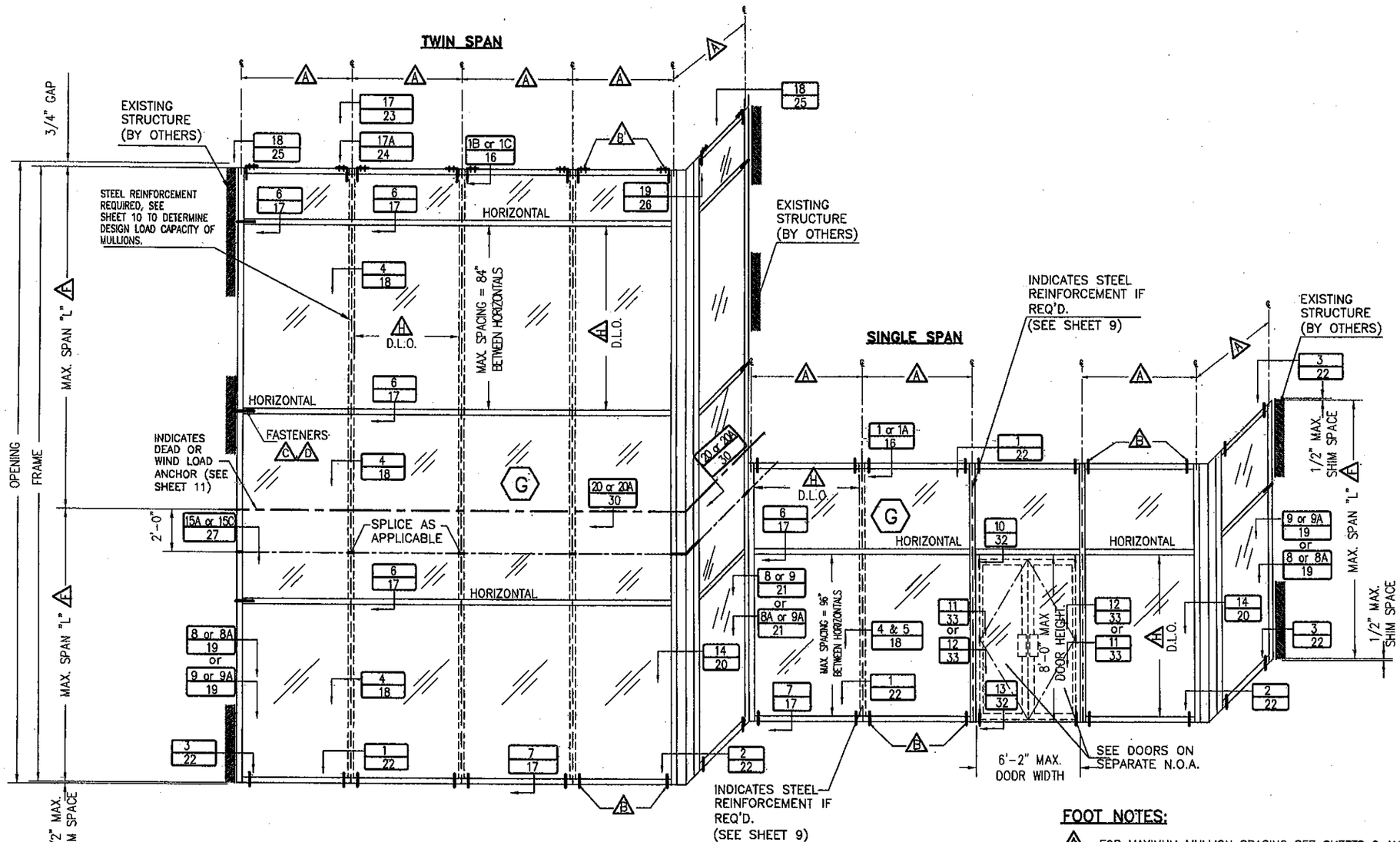

FOOT NOTES:

- (A) FOR MAXIMUM MULLION SPACING SEE SHEETS 9 AND 10.
- (B) FOR HEAD (AT SINGLE SPAN CASE) AND SILL (AT SINGLE AND TWIN SPAN CASES), FASTENERS QUANTITY, TYPES AND SPECS SEE SHEET 12.
- (B') FOR HEAD (AT TWIN SPAN), FASTENERS QUANTITY, TYPES AND SPECS SEE SHEET 13.
- (C) FOR JAMB FASTENERS QUANTITY, TYPES AND SPECS SEE SHEETS 14 & 15.
- (D) SEE SHEETS 14 THRU 15 FOR MAXIMUM PRESSURE RATING FOR JAMBS CONNECTED TO EXISTING STRUCTURE.
- (F) FOR MAXIMUM MULLION SPAN SEE SHEETS 9 AND 10.
- (G) FOR GLAZING DETAILS AND GLASS SCHEDULE SEE SHEET 7.
- (H) FOR MAXIMUM D.L.O. AND PRESSURE RATING FOR GLASS SEE SCHEDULE ON SHEET 8.

FLORIDA BUILDING CODE (High Velocity Hurricane Zone)

M.C.V. DRAWN BY | 01/14/10 DATE | 10-014 DRAWING No | SHEET 6 OF 33

HR-251 SSG CAPTURED CURTAIN WALL SYSTEM LARGE & SMALL MISSILE WITH INSULATING LAMINATED GLASS

Oldcastle BuildingEnvelope™
803 Airport Rd - Terrell, TX 75160
www.OldcastleBE.com - Phone 800-869-4567

REV. No.	DESCRIPTION	DATE
1	GENERAL	01/04/11

REV. No.	DESCRIPTION	DATE
-	-	-
-	-	-

©2010 TILTECO, INC

TILTECO INC.
TILLIT TESTING & ENGINEERING COMPANY
6355 N.W. 36th St., Ste. 305, VIRGINIA GARDENS, FL 33166
Phone : (305)871-1530 . Fax : (305)871-1531
e-mail: tilteco@aol.com
EB-0006719
WALTER A. TILLIT Jr. P.E.
FLORIDA Lic. # 44167

WALTER A. TILLIT JR. LICENSE No. 44167 STATE OF FLORIDA PROFESSIONAL ENGINEER

SIGNATURE / DATE
P.E. SEAL / LICENSE

PRODUCT REVISED as complying with the Florida Building Code
Acceptance No 10-0331.07
Expiration Date FEB.11.2016
By Miami-Dade Product Control

MIAMI-DADE COUNTY

TYPICAL GLAZING DETAILS

SCALE 1/2" = 1"

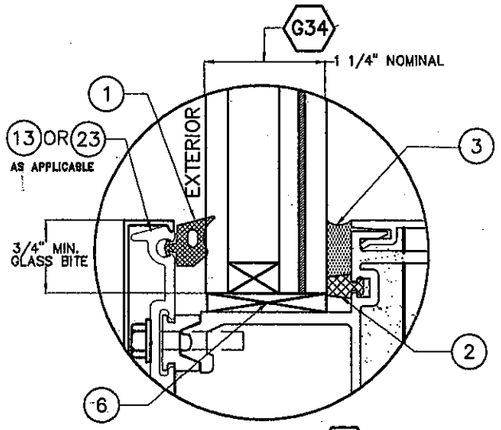

GLASS TYPE G34

@ HORIZONTALS, JAMBS & CORNER MULLIONS

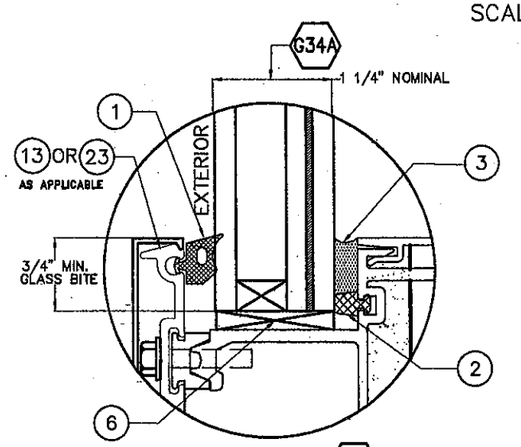

GLASS TYPE G34A

@ HORIZONTALS, JAMBS & CORNER MULLIONS

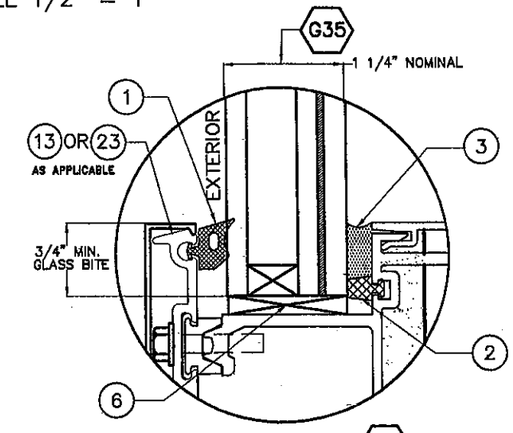

GLASS TYPE G35

@ HORIZONTALS, JAMBS & CORNER MULLIONS

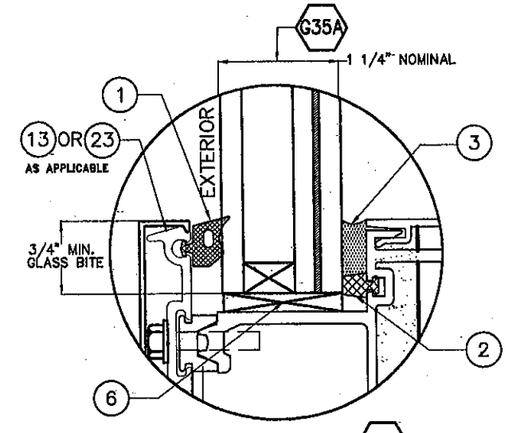

GLASS TYPE G35A

@ HORIZONTALS, JAMBS & CORNER MULLIONS

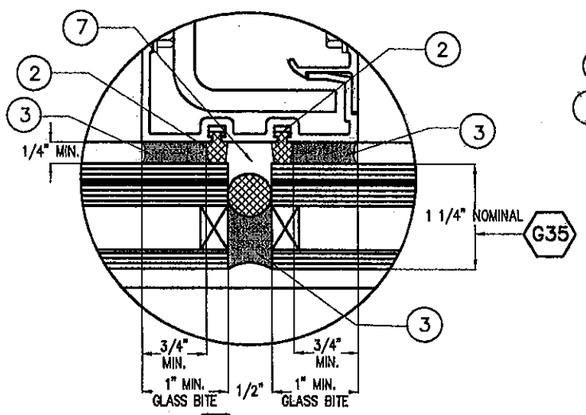

GLASS TYPE G35 @ SSG MULLIONS

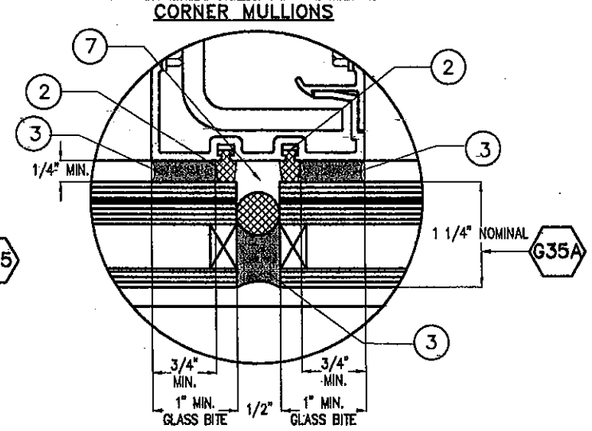

GLASS TYPE G35A @ SSG MULLIONS

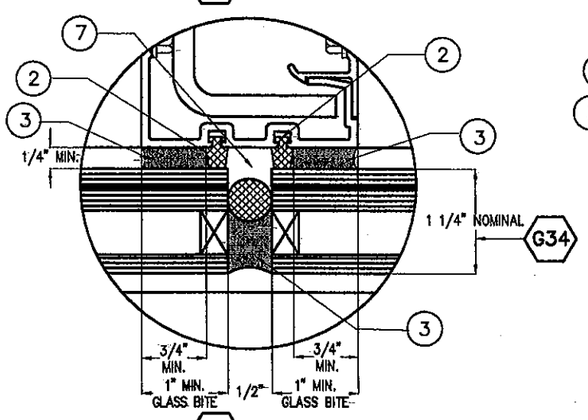

GLASS TYPE G34 @ SSG MULLIONS

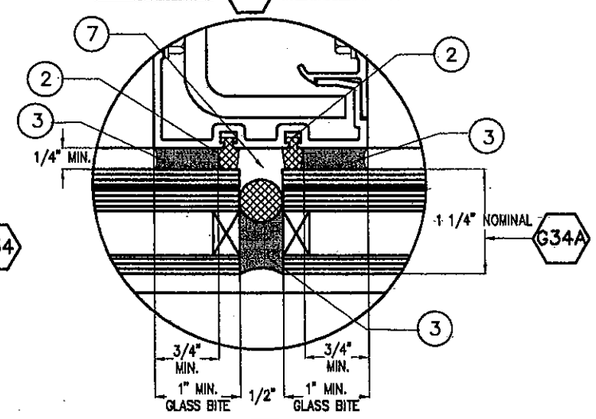

GLASS TYPE G34A @ SSG MULLIONS

GLASS SCHEDULE

GLASS LABEL	GLASS COMPOSITION	MANUFACTURER NAME	MAX. D.L.O.	VALID ONLY FOR INSTALLATIONS	NOA'S #
G34	1 1/4" INSULATED LAMINATED GLASS CONSISTING OF EXTERIOR 1/4" H.S. – 1/2" AIR SPACE – 1/4" H.S.. –0.090" SOLUTIA SAFLEX® IIIG PVB CLEAR OR COLORED INTERLAYER – 1/4" H.S.	SOLUTIA	SEE SCHEDULE ON SHEET 8	UP TO 30 FEET ABOVE GRADE MEASURED AT SILL	06–0216.06
G34A	1 1/4" INSULATED LAMINATED GLASS CONSISTING OF EXTERIOR 1/4" TEMP. – 1/2" AIR SPACE – 1/4" H.S.. –0.090" SOLUTIA SAFLEX® IIIG PVB CLEAR OR COLORED INTERLAYER – 1/4" H.S.	SOLUTIA	SEE SCHEDULE ON SHEET 8	ABOVE 30 FEET ABOVE GRADE MEASURED AT SILL	06–0216.06
G35	1 1/4" INSULATED LAMINATED GLASS CONSISTING OF EXTERIOR 1/4" H.S. – 1/2" AIR SPACE – 1/4" H.S. – 0.075" SOLUTIA VANCEVA COMPOSITES INTERLAYER – 1/4" H.S.	SOLUTIA	SEE SCHEDULE ON SHEET 8	UP TO 30 FEET ABOVE GRADE MEASURED AT SILL	08–1224.04/ 08–1118.07
G35A	1 1/4" INSULATED LAMINATED GLASS CONSISTING OF EXTERIOR 1/4" TEMP. – 1/2" AIR SPACE – 1/4" H.S. – 0.075" SOLUTIA VANCEVA COMPOSITES INTERLAYER – 1/4" H.S.	SOLUTIA	SEE SCHEDULE ON SHEET 8	ABOVE 30 FEET ABOVE GRADE MEASURED AT SILL	08–1224.04/ 08–1118.07

FLORIDA BUILDING CODE (High Velocity Hurricane Zone)

M.C.V. DRAWN BY

01/14/10 DATE

10–014 DRAWING No

SHEET 7 OF 33

HR-251 SSG CAPTURED CURTAIN WALL SYSTEM LARGE & SMALL MISSILE WITH INSULATING LAMINATED GLASS

Oldcastle BuildingEnvelope™
803 Airport Rd - Terrell, TX 75160
www.OldcastleBE.com - Phone 800-869-4567

REV. No	DESCRIPTION	DATE
1	GENERAL	07/04/11

REV. No	DESCRIPTION	DATE
-	-	-
-	-	-
-	-	-

©2010 TILTECO, INC

TILTECO INC.
TILLIT TESTING & ENGINEERING COMPANY
6355 N.W. 36th. St., Ste. 305, VIRGINIA GARDENS, FL 33166
Phone : (305)871-1530 . Fax : (305)871-1531
e-mail: tilteco@aol.com
EB-0006719
WALTER A. TILLIT Jr. P.E.
FLORIDA Lic. # 44167

WALTER A. TILLIT JR. LICENSE No. 44167 STATE OF FLORIDA PROFESSIONAL ENGINEER

P.E. SEAL AND SIGNATURE REQUIRED

PRODUCT REVISED as complying with the Florida Building Code
Acceptance No. 10-0331.07
Expiration Date FEB 11 2016
By Miami-Dade Product Control

MIAMI–DADE COUNTY

MAXIMUM FRAME WIDTH "a" AND FRAME LENGTH "b" VERSUS DESIGN PRESSURE RATING "W" (psf) SCHEDULE *

GLASS TYPES

G34 , G34A , G35 & G35A

DIMENSION "a"	DIMENSION "b"	MAXIMUM DESIGN PRESSURE RATING "W"(psf)
24"	from 24" to 96"	±90.0
30"	from 30" to 96"	±90.0
36"	from 36" to 96"	±90.0
42"	from 42" to 96"	±90.0
48"	from 48" to 96"	±90.0
52.1"	from 52.1" to 96"	±90.0
54"	from 54" to 92"	±86.8
60"	from 60" to 83"	±78.0
66"	from 66" to 75"	±71.0
70.5"	from 70.5" to 70.5"	±66.5

* DETERMINATION OF MAXIMUM DAY LIGHT OPENING (D.L.O.) AT EACH END OF GLASS GIVEN "a" & "b"

SIDE	MAX. DAY LIGHT OPENING	
	(D.L.O.) Formula at vertical & jamb mullions	(D.L.O.) Formula at horizontal, head & sill frames
MAX. D.L.O. (a) (SHORT SIDE)	"a"–5.00"	--
MAX. D.L.O. (b) (LONG SIDE)	--	"b"–5.00"

NOTES:
1. SEE SHEET 7 FOR GLAZING DETAILS AND GLASS SCHEDULE.

DIMENSIONS LEGEND

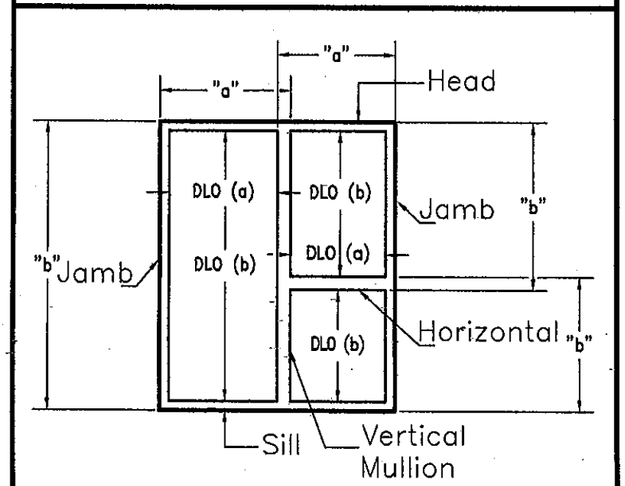

FLORIDA BUILDING CODE (High Velocity Hurricane Zone)

M.C.V. DRAWN BY | 01/14/10 DATE | 10–014 DRAWING No | SHEET 8 OF 33

HR-251 SSG CAPTURED CURTAIN WALL SYSTEM LARGE & SMALL MISSILE WITH INSULATING LAMINATED GLASS

Oldcastle BuildingEnvelope™
803 Airport Rd - Terrell, TX 75160
www.OldcastleBE.com - Phone 800-869-4567

REV. No	DESCRIPTION	DATE
1	GENERAL	01/04/11
-	-	-

REV. No	DESCRIPTION	DATE
-	-	-
-	-	-

©2010 TILTECO, INC

TILTECO INC.
TILLIT TESTING & ENGINEERING COMPANY
6355 N.W. 36th. St., Ste. 305, VIRGINIA GARDENS, FL 33166
Phone : (305)871-1530 , Fax : (305)871-1531
e-mail: tilteco@aol.com
EB-0006719
WALTER A. TILLIT Jr. P.E.
FLORIDA Lic. # 44167

WALTER A. TILLIT JR. LICENSE No. 44167 STATE OF FLORIDA PROFESSIONAL ENGINEER

P.E. SEAL AND SIGNATURE REQUIRED

PRODUCT REVISED as complying with the Florida Building Code
Acceptance No. 10-0331.07
Expiration Date FEB. 11, 2016
By Miami-Dade Product Control

MIAMI–DADE COUNTY

HR-251 SSG SINGLE SPAN MULLION

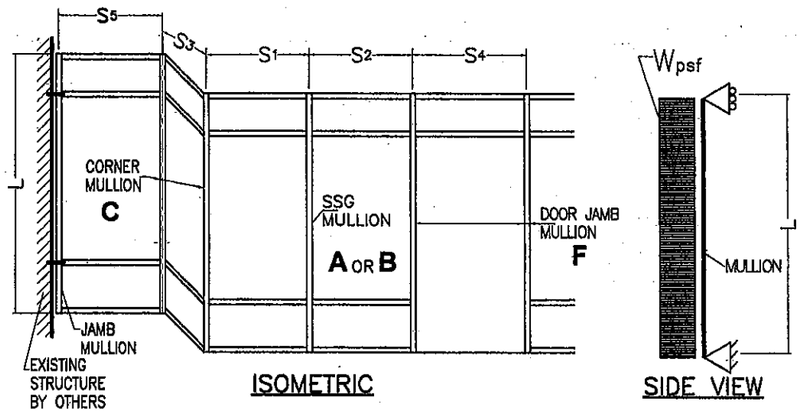

ISOMETRIC

SIDE VIEW

L = MULLION SPAN ; S1, S2, S3, S4 & S5 = MULLION SPACING

EFFECTIVE SPACING $b = \frac{S_1 + S_2}{2}$ (FOR STANDARD MULLION)

EFFECTIVE SPACING $b = \frac{S_1 + S_3}{2}$ (FOR CORNER MULLION)

EFFECTIVE SPACING $b = \frac{S_2 + S_4}{2}$ (FOR DOOR JAMB MULLION)

EFFECTIVE SPACING $b = \frac{S_5}{2}$ (FOR JAMB MULLION)

CASE DEFINITIONS

CASE 1 : SINGLE SPAN UNREINFORCED SSG MULLION **A** (SEE DET. 5/18)

CASE 2 : SINGLE SPAN REINFORCED SSG MULLION **B** FULL HEIGHT. (SEE DET. 4/18)

CASE 3 : SINGLE SPAN REINFORCED CORNER MULLION **C** FULL HEIGHT. (SEE DET. 14/20)

CASE 6 : SINGLE SPAN REINFORCED DOOR JAMB MULLION **F** FULL HEIGHT. (SEE DET. 12/33)

MAXIMUM DESIGN PRESSURE RATING FOR SSG, DOOR JAMB & CORNER MULLIONS *

MAXIMUM MULLION SPAN "L"(FT) SCHEDULE FOR A GIVEN DESIGN PRESSURE RATING "W" (psf) AND A GIVEN MULLION EFFECTIVE SPACING "b"

MAXIMUM DESIGN LOAD "W±" (psf)	EFFECTIVE SPACING "b" (Ft-In)	SINGLE SPAN MULLIONS CASE 1 MULLION: A "L" (Ft-In)	CASE 2 MULLION: B "L" (Ft-In)	CASE 3 MULLION: C "L" (Ft-In)	CASE 6 MULLION: F "L" (Ft-In)
60.0	3 '- 0 "	8 '- 0 "	12 '- 0 "	12 '- 0 "	12 '- 0 "
	3 '- 6 "	8 '- 0 "	12 '- 0 "	12 '- 0 "	12 '- 0 "
	4 '- 0 "	8 '- 0 "	12 '- 0 "	12 '- 0 "	12 '- 0 "
	5 '- 0 "	-	-	-	12 '- 0 "
65.0	3 '- 0 "	8 '- 0 "	12 '- 0 "	12 '- 0 "	12 '- 0 "
	3 '- 6 "	8 '- 0 "	12 '- 0 "	12 '- 0 "	12 '- 0 "
	4 '- 0 "	8 '- 0 "	12 '- 0 "	12 '- 0 "	12 '- 0 "
	5 '- 0 "	-	-	-	12 '- 0 "
67.0	3 '- 0 "	-	12 '- 0 "	12 '- 0 "	12 '- 0 "
	3 '- 6 "	-	12 '- 0 "	12 '- 0 "	12 '- 0 "
	4 '- 0 "	-	12 '- 0 "	12 '- 0 "	12 '- 0 "
	5 '- 0 "	-	-	-	12 '- 0 "
70.0	3 '- 0 "	-	12 '- 0 "	12 '- 0 "	12 '- 0 "
	3 '- 6 "	-	12 '- 0 "	12 '- 0 "	12 '- 0 "
	4 '- 0 "	-	12 '- 0 "	12 '- 0 "	12 '- 0 "
	5 '- 0 "	-	-	-	12 '- 0 "
75.0	3 '- 0 "	-	12 '- 0 "	12 '- 0 "	12 '- 0 "
	3 '- 6 "	-	12 '- 0 "	12 '- 0 "	12 '- 0 "
	4 '- 0 "	-	12 '- 0 "	12 '- 0 "	12 '- 0 "
	5 '- 0 "	-	-	-	11 '- 6 "
80.0	3 '- 0 "	-	12 '- 0 "	12 '- 0 "	12 '- 0 "
	3 '- 6 "	-	12 '- 0 "	12 '- 0 "	12 '- 0 "
	4 '- 0 "	-	12 '- 0 "	12 '- 0 "	12 '- 0 "
	5 '- 0 "	-	-	-	10 '- 10 "
85.0	3 '- 0 "	-	12 '- 0 "	12 '- 0 "	12 '- 0 "
	3 '- 6 "	-	12 '- 0 "	12 '- 0 "	12 '- 0 "
	4 '- 0 "	-	12 '- 0 "	12 '- 0 "	12 '- 0 "
	5 '- 0 "	-	-	-	10 '- 2 "
90.0	3 '- 0 "	-	12 '- 0 "	12 '- 0 "	12 '- 0 "
	3 '- 6 "	-	12 '- 0 "	12 '- 0 "	12 '- 0 "
	4 '- 0 "	-	12 '- 0 "	12 '- 0 "	12 '- 0 "
	5 '- 0 "	-	-	-	9 '- 7 "

* MAXIMUM DESIGN PRESSURE RATING FOR SSG, DOOR JAMB & CORNER MULLION WILL AUTOMATICALLY QUALIFY DESIGN PRESSURE RATINGS FOR JAMBS FOR ANY GIVEN MULLION SPACING.
MAXIMUM JAMB SPAN (DISTANCE BETWEEN ANCHORAGE POINTS) IS 96", AND JAMB ANCHORAGE SHALL BE PERFORMED AT HORIZONTAL RAIL LOCATIONS.

A — CASE:1 LIGHT MULLION (19) + (18) — Ix= 7.031 in4, Sx= 2.8713 in3 — IN TERMS OF ALUM.

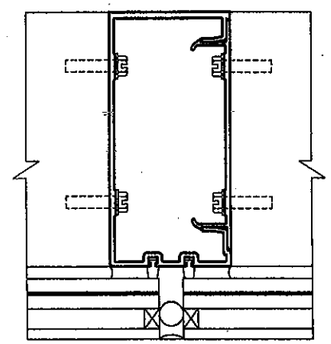

B — CASE:2 LIGHT MULLION (19) + (16) W/ STEEL CHANNEL (34) — Ix= 24.5170 in4, Sx= 9.0837 in3 — IN TERMS OF ALUM.

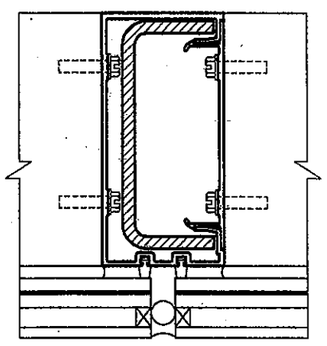

C — CASE:3 CORNER MULLION (25) + (26) W/ STEEL CHANNEL (31) — Ix= 35.138 in4, Sx= 9.0422 in3 — IN TERMS OF ALUM.

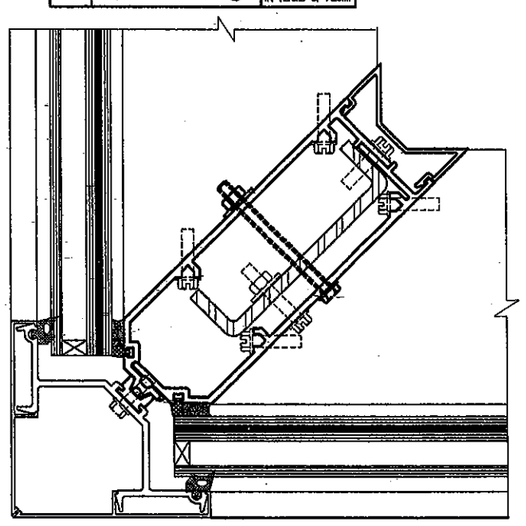

F — CASE:6 LIGHT MULLION (15) + (16) W/ STEEL CHANNEL (34) & 3/4"x4" STEEL BAR (52) — Ix= 40.604 in4, Sx= 9.2970 in3 — IN TERMS OF ALUM.

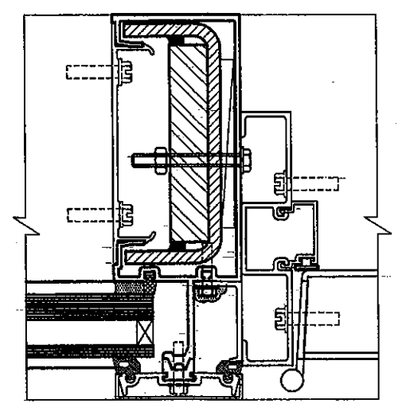

FLORIDA BUILDING CODE (High Velocity Hurricane Zone)

HR-251 SSG CAPTURED CURTAIN WALL SYSTEM LARGE & SMALL MISSILE WITH INSULATING LAMINATED GLASS

Oldcastle BuildingEnvelope™
803 Airport Rd - Terrell, TX 75160
www.OldcastleBE.com - Phone 800-869-4567

REV. No	DESCRIPTION	DATE
1	GENERAL	01/04/11
-	ISOMETRIC FIXED	02/10/11

REV. No	DESCRIPTION	DATE
-	-	-
-	-	-
-	-	-

M.C.V. DRAWN BY

01/14/10 DATE

10-014 DRAWING No

SHEET 9 OF 33

©2010 TILLECO, INC

TILLECO INC.
TILLIT TESTING & ENGINEERING COMPANY
6355 N.W. 36th. St., Ste. 305, VIRGINIA GARDENS, FL 33166
Phone : (305)871-1530 . Fax : (305)871-1531
e-mail: tilleco@aol.com
EB-0006719
WALTER A. TILLIT Jr. P.E.
FLORIDA Lic. # 44167

WALTER A. TILLIT JR. LICENSE No. 44167 STATE OF FLORIDA PROFESSIONAL ENGINEER

P.E. SEAL/SIGNATURE/DATE

PRODUCT REVISED as complying with the Florida Building Code
Acceptance No 10-0331.07
Expiration Date FEB 11, 2016
By Miami Dade Product Control

MIAMI-DADE COUNTY

HR-251 SSG TWIN SPAN MULLION

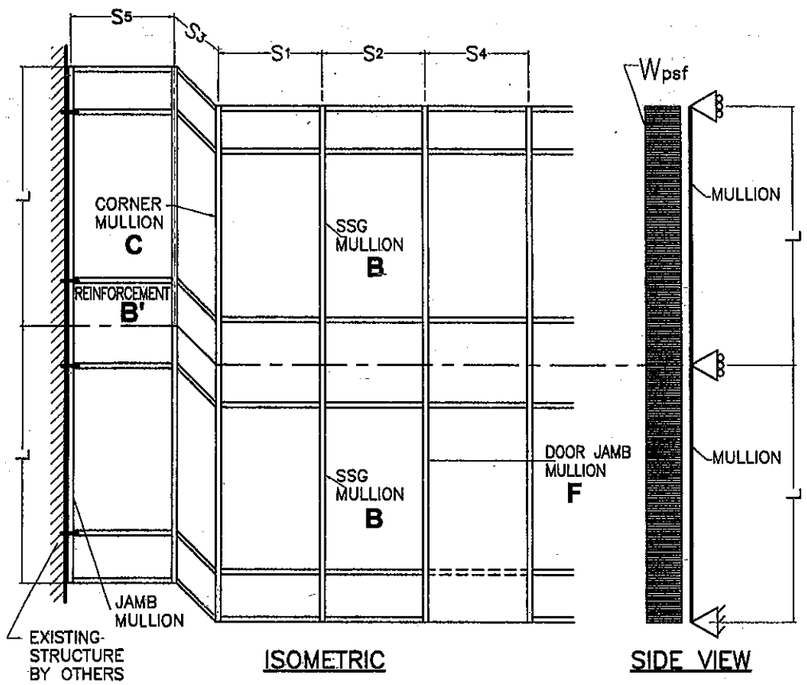

ISOMETRIC

SIDE VIEW

L = MULLION SPAN ; S_1, S_2, S_3, S_4 & S_5 = MULLION SPACING

EFFECTIVE SPACING $b = \frac{S_1 + S_2}{2}$ (FOR STANDARD MULLION)

EFFECTIVE SPACING $b = \frac{S_1 + S_3}{2}$ (FOR CORNER MULLION)

EFFECTIVE SPACING $b = \frac{S_2 + S_4}{2}$ (FOR DOOR JAMB MULLION)

EFFECTIVE SPACING $b = \frac{S_5}{2}$ (FOR JAMB MULLION)

C	CASE:3 CORNER MULLION (25) + (26) W/ STEEL CHANNEL (31)	Ix= 35.138 in4 Sx= 9.0422 in3 IN TERMS OF ALUM.

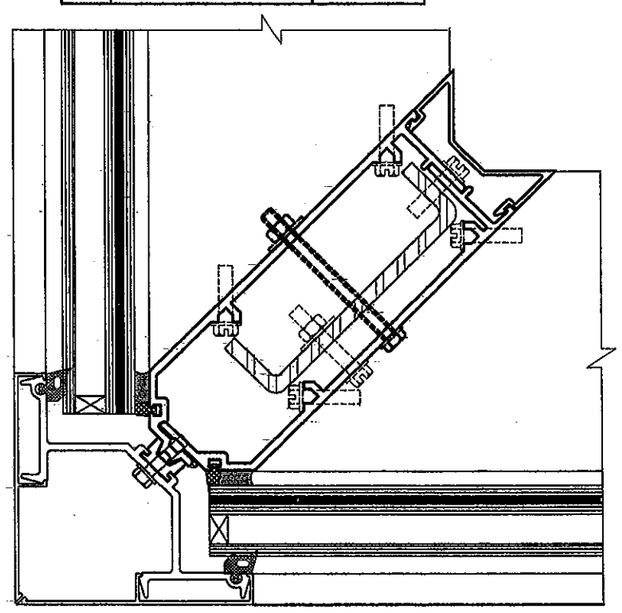

CASE DEFINITIONS

CASE 4 : TWIN SPAN REINFORCED SSG MULLION **B** FULL HEIGHT. (SEE DET. 4/18).

CASE 5 : TWIN SPAN REINFORCED CORNER MULLION **C** FULL HEIGHT. (SEE DET. 14/20).

CASE 6 : REINFORCED DOOR JAMB MULLION **F** FULL HEIGHT. (SEE DET. 12/33)

B	CASE:4 LIGHT MULLION (19) + (16) W/ STEEL CHANNEL (34)	Ix= 24.517 in4 Sx= 9.084 in3 IN TERMS OF ALUM.

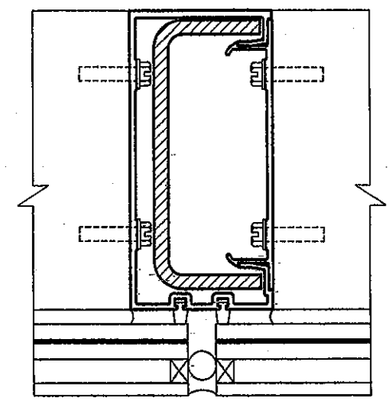

F	CASE:6 ◊ LIGHT MULLION (15) + (16) W/ STEEL CHANNEL (34) & 3/4"x4" STEEL BAR (52)	Ix= 40.604 in4 Sx= 9.2970 in3 IN TERMS OF ALUM.

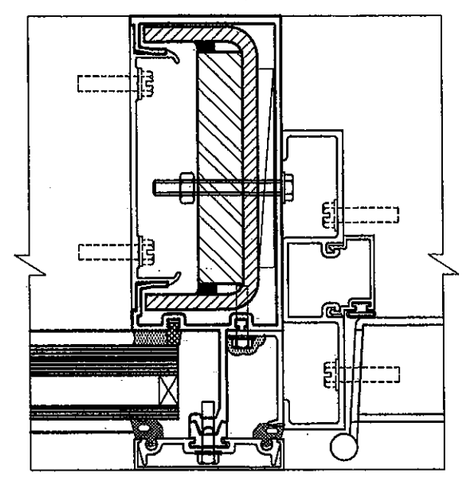

◊ THIS MULLION SHALL BE USED FULL HEIGHT, i.e. ON BOTH SPANS OF THE TWIN SPAN CONDITION.

MAXIMUM DESIGN PRESSURE RATING FOR SSG, DOOR JAMB & CORNER MULLIONS *

MAXIMUM MULLION SPAN "L"(FT) SCHEDULE FOR A GIVEN DESIGN PRESSURE RATING "W" (psf) AND A GIVEN MULLION EFFECTIVE SPACING "b"

MAXIMUM DESIGN LOAD "W±" (psf)	EFFECTIVE SPACING "b" (Ft-In)	TWIN SPAN MULLIONS CASE 4 MULLION: B "L" (Ft-In)	CASE 5 MULLION: C "L" (Ft-In)	CASE 6 ◊ MULLION: F "L" (Ft-In)
60.0	3 '- 0 "	12 '- 6 "	12 '- 6 "	12 '- 6 "
	3 '- 6 "	12 '- 6 "	12 '- 6 "	12 '- 6 "
	4 '- 0 "	12 '- 6 "	12 '- 6 "	12 '- 6 "
	4 '- 1 "	-	12 '- 6 "	12 '- 6 "
	5 '- 0 "	-	-	12 '- 6 "
65.0	3 '- 0 "	12 '- 6 "	12 '- 6 "	12 '- 6 "
	3 '- 6 "	12 '- 6 "	12 '- 6 "	12 '- 6 "
	4 '- 0 "	12 '- 6 "	12 '- 6 "	12 '- 6 "
	4 '- 1 "	-	12 '- 6 "	12 '- 6 "
	5 '- 0 "	-	-	12 '- 6 "
67.0	3 '- 0 "	12 '- 6 "	12 '- 6 "	12 '- 6 "
	3 '- 6 "	12 '- 6 "	12 '- 6 "	12 '- 6 "
	4 '- 0 "	12 '- 6 "	12 '- 6 "	12 '- 6 "
	4 '- 1 "	-	12 '- 6 "	12 '- 6 "
	5 '- 0 "	-	-	12 '- 6 "
70.0	3 '- 0 "	12 '- 6 "	12 '- 6 "	12 '- 6 "
	3 '- 6 "	12 '- 6 "	12 '- 6 "	12 '- 6 "
	4 '- 0 "	12 '- 6 "	12 '- 6 "	12 '- 6 "
	4 '- 1 "	-	12 '- 6 "	12 '- 6 "
	5 '- 0 "	-	-	12 '- 6 "
75.0	3 '- 0 "	12 '- 6 "	12 '- 6 "	12 '- 6 "
	3 '- 6 "	12 '- 6 "	12 '- 6 "	12 '- 6 "
	4 '- 0 "	12 '- 6 "	12 '- 6 "	12 '- 6 "
	4 '- 1 "	-	12 '- 6 "	12 '- 6 "
	5 '- 0 "	-	-	12 '- 4 "
80.0	3 '- 0 "	12 '- 6 "	12 '- 6 "	12 '- 6 "
	3 '- 6 "	12 '- 6 "	12 '- 6 "	12 '- 6 "
	4 '- 0 "	12 '- 6 "	12 '- 6 "	12 '- 6 "
	4 '- 1 "	-	12 '- 6 "	12 '- 6 "
	5 '- 0 "	-	-	12 '- 0 "
85.0	3 '- 0 "	12 '- 6 "	12 '- 6 "	12 '- 6 "
	3 '- 6 "	12 '- 6 "	12 '- 6 "	12 '- 6 "
	4 '- 0 "	12 '- 6 "	12 '- 6 "	12 '- 6 "
	4 '- 1 "	-	12 '- 6 "	12 '- 6 "
	5 '- 0 "	-	-	11 '- 7 "
90.0	3 '- 0 "	12 '- 6 "	12 '- 6 "	12 '- 6 "
	3 '- 6 "	12 '- 6 "	12 '- 6 "	12 '- 6 "
	4 '- 0 "	12 '- 6 "	12 '- 6 "	12 '- 6 "
	4 '- 1 "	-	12 '- 6 "	12 '- 6 "
	5 '- 0 "	-	-	11 '- 3 "

* MAXIMUM DESIGN PRESSURE RATING FOR SSG, DOOR JAMB & CORNER MULLION WILL AUTOMATICALLY QUALIFY DESIGN PRESSURE RATINGS FOR JAMBS FOR ANY GIVEN MULLION SPACING. MAXIMUM JAMB SPAN (DISTANCE BETWEEN ANCHORAGE POINTS) IS 84", AND JAMB ANCHORAGE SHALL BE PERFORMED AT HORIZONTAL LOCATIONS.

FLORIDA BUILDING CODE (High Velocity Hurricane Zone)

M.C.V. DRAWN BY | 01/14/10 DATE | 10-014 DRAWING No | SHEET 10 OF 33

HR-251 SSG CAPTURED CURTAIN WALL SYSTEM LARGE & SMALL MISSILE WITH INSULATING LAMINATED GLASS

Oldcastle BuildingEnvelope™
803 Airport Rd - Terrell, TX 75160
www.OldcastleBE.com - Phone 800-869-4567

REV. No	DESCRIPTION	DATE	REV. No	DESCRIPTION	DATE
1	GENERAL	01/04/11	-	-	-
-	ISOMETRIC FIXED	02/10/11	-	-	-

©2010 TILTECO, INC

TILTECO INC.
TILLIT TESTING & ENGINEERING COMPANY
8355 N.W. 36th St., Ste. 305, VIRGINIA GARDENS, FL 33166
Phone : (305)871-1530, Fax : (305)871-1531
e-mail: tilteco@aol.com
EB-0006719
WALTER A. TILLIT Jr., P.E.
FLORIDA Lic. # 44167

WALTER A. TILLIT JR. LICENSE No. 44167 STATE OF FLORIDA PROFESSIONAL ENGINEER
P.E. SEAL & SIGNATURE

PRODUCT REVISED as complying with the Florida Building Code
Acceptance No 10-0331.07
Expiration Date FEB 11, 2016
By Miami-Dade Product Control

MIAMI-DADE COUNTY

OPTIONS FOR TWIN SPAN STANDARD AND CORNER MULLIONS INSTALLATION FOR HR-251 SSG CURTAIN WALL SYSTEM

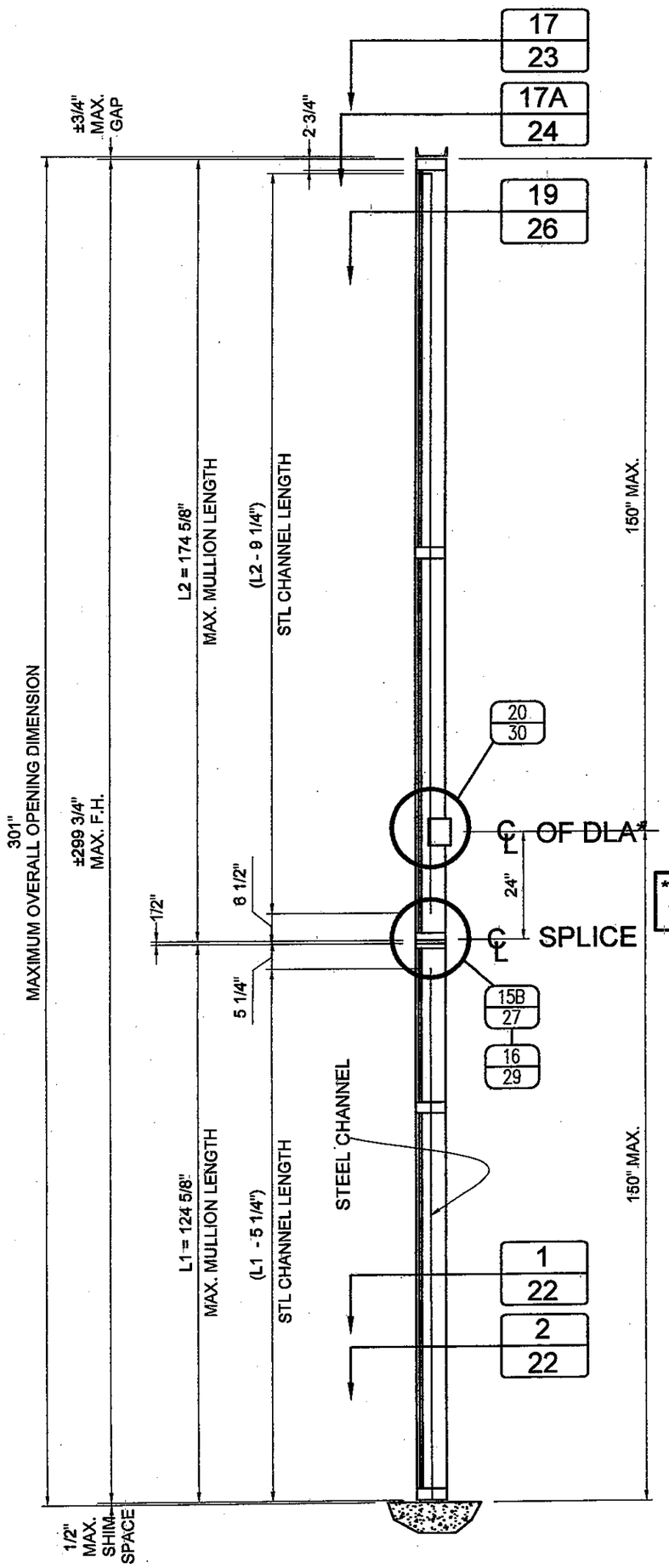

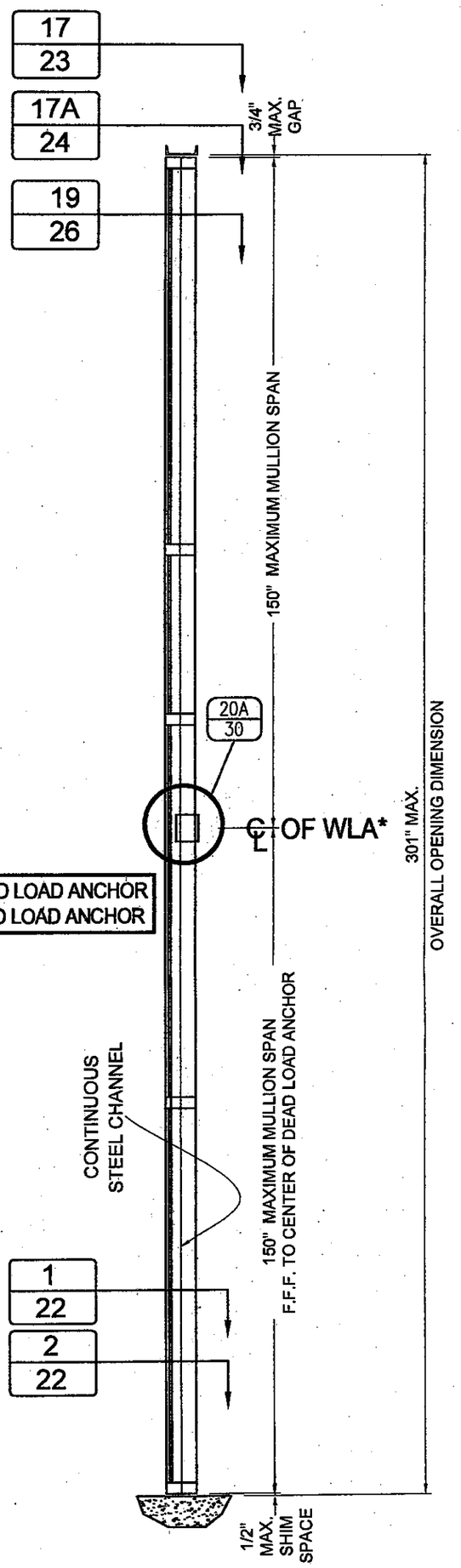

* DLA = DEAD LOAD ANCHOR
WLA = WIND LOAD ANCHOR

OPTION # 1
MULLION W/ SPLICE
(TWIN SPAN JAMBS MUST BE ALWAYS BE SPLICED @ LOCATION SHOWN ON ISOMETRIC ON SHEET 6, INCLUDING PROVISIONS FOR EXPANSION JOINTS)

OPTION # 2:
CONTINUOUS MULLION W/O SPLICE

PRODUCT REVISED
as complying with the Florida Building Code
Acceptance No 10-0331.07
Expiration Date FEB 17, 2016
By Manuel Perez
Miami Dade Product Control

MIAMI–DADE COUNTY

WALTER A. TILLIT JR. LICENSE No. 44167 STATE OF FLORIDA PROFESSIONAL ENGINEER

P.E. SEAL, SIGNATURE & DATE

FLORIDA BUILDING CODE (High Velocity Hurricane Zone)

©2010 TILTECO, INC

TILTECO INC.
TILLIT TESTING & ENGINEERING COMPANY
6355 N.W. 36th. St., Ste. 305, VIRGINIA GARDENS, FL 33166
Phone : (305)871-1530 . Fax : (305)871-1531
e-mail: tilteco@aol.com
EB-0006719
WALTER A. TILLIT Jr. P.E.
FLORIDA Lic. # 44167

HR-251 SSG CAPTURED CURTAIN WALL SYSTEM LARGE & SMALL MISSILE WITH INSULATING LAMINATED GLASS

Oldcastle BuildingEnvelope™
803 Airport Rd - Terrell, TX 75160
www.OldcastleBE.com - Phone 800-869-4567

REV. No	DESCRIPTION	DATE	REV. No	DESCRIPTION	DATE
1	GENERAL	01/04/11	–	–	–
–	–	–	–	–	–

M.C.V.
DRAWN BY

01/14/10
DATE

10–014
DRAWING No

SHEET 11 OF 33

MAXIMUM PRESSURE RATING FOR SINGLE SPAN (HEAD & SILL) & TWIN SPAN (SILL ONLY) MULLION CONNECTIONS (SEE ALSO SHEET 13)

SINGLE SPAN MULLION: HEAD & SILL CONNECTION *

MAXIMUM MULLION SPAN "L" (ft-in)	EFFECTIVE SPACING "b" (ft-in)	MAXIMUM PRESSURE RATING W (psf): POURED CONCRETE (Min. fc = 3ksi) SUBSTRATE, FASTENERS TYPES A	B	C	1/4" Min. THK ASTM A-36 STEEL SUBSTRATE, FASTENERS D
8 '- 0	3 '- 0 "	90.0	90.0	90.0	90.0
	3 '- 6 "	90.0	90.0	90.0	90.0
	4 '- 0 "	90.0	90.0	90.0	90.0
	5 '- 0 "	90.0	90.0	90.0	90.0
8 '- 6 "	3 '- 0 "	90.0	90.0	90.0	90.0
	3 '- 6 "	90.0	90.0	90.0	90.0
	4 '- 0 "	90.0	90.0	90.0	90.0
	5 '- 0 "	90.0	90.0	90.0	90.0
9 '- 0 "	3 '- 0 "	90.0	90.0	90.0	90.0
	3 '- 6 "	90.0	90.0	90.0	90.0
	4 '- 0 "	90.0	90.0	90.0	90.0
	5 '- 0 "	90.0	90.0	90.0	90.0
9 '- 6 "	3 '- 0 "	90.0	90.0	90.0	90.0
	3 '- 6 "	90.0	90.0	90.0	90.0
	4 '- 0 "	90.0	90.0	90.0	90.0
	5 '- 0 "	90.0	90.0	90.0	90.0
10 '- 0 "	3 '- 0 "	90.0	90.0	90.0	90.0
	3 '- 6 "	90.0	90.0	90.0	90.0
	4 '- 0 "	90.0	90.0	90.0	90.0
	5 '- 0 "	90.0	90.0	90.0	90.0
10 '- 6 "	3 '- 0 "	90.0	90.0	90.0	90.0
	3 '- 6 "	90.0	90.0	90.0	90.0
	4 '- 0 "	90.0	90.0	90.0	90.0
	5 '- 0 "	90.0	90.0	90.0	90.0
11 '- 0 "	3 '- 0 "	90.0	90.0	90.0	90.0
	3 '- 6 "	90.0	90.0	90.0	90.0
	4 '- 0 "	90.0	90.0	90.0	90.0
	5 '- 0 "	90.0	90.0	90.0	90.0
11 '- 6 "	3 '- 0 "	90.0	90.0	90.0	90.0
	3 '- 6 "	90.0	90.0	90.0	90.0
	4 '- 0 "	90.0	90.0	90.0	90.0
	5 '- 0 "	90.0	90.0	90.0	90.0
12 '- 0 "	3 '- 0 "	90.0	90.0	90.0	90.0
	3 '- 6 "	90.0	90.0	90.0	90.0
	4 '- 0 "	90.0	90.0	90.0	90.0
	5 '- 0 "	90.0	90.0	90.0	90.0
12 '- 6 "	3 '- 0 "	90.0	90.0	90.0	90.0
	3 '- 6 "	90.0	90.0	90.0	90.0
	4 '- 0 "	90.0	90.0	90.0	90.0
	5 '- 0 "	90.0	90.0	88.5	90.0

TWIN SPAN MULLION: SILL CONNECTION *

MAXIMUM MULLION SPAN "L" (ft-in)	EFFECTIVE SPACING "b" (ft-in)	MAXIMUM PRESSURE RATING W (psf): POURED CONCRETE (Min. fc = 3ksi) SUBSTRATE, FASTENERS TYPES A	B	C	1/4" Min. THK ASTM A-36 STEEL SUBSTRATE, FASTENERS D
8 '- 0 "	3 '- 0 "	90.0	90.0	90.0	90.0
	3 '- 6 "	90.0	90.0	90.0	90.0
	4 '- 0 "	90.0	90.0	90.0	90.0
	4 '- 1 "	90.0	90.0	90.0	90.0
	5 '- 0 "	90.0	90.0	90.0	90.0
8 '- 6 "	3 '- 0 "	90.0	90.0	90.0	90.0
	3 '- 6 "	90.0	90.0	90.0	90.0
	4 '- 0 "	90.0	90.0	90.0	90.0
	4 '- 1 "	90.0	90.0	90.0	90.0
	5 '- 0 "	90.0	90.0	90.0	90.0
9 '- 0 "	3 '- 0 "	90.0	90.0	90.0	90.0
	3 '- 6 "	90.0	90.0	90.0	90.0
	4 '- 0 "	90.0	90.0	90.0	90.0
	4 '- 1 "	90.0	90.0	90.0	90.0
	5 '- 0 "	90.0	90.0	90.0	90.0
9 '- 6 "	3 '- 0 "	90.0	90.0	90.0	90.0
	3 '- 6 "	90.0	90.0	90.0	90.0
	4 '- 0 "	90.0	90.0	90.0	90.0
	4 '- 1 "	90.0	90.0	90.0	90.0
	5 '- 0 "	90.0	90.0	90.0	90.0
10 '- 0 "	3 '- 0 "	90.0	90.0	90.0	90.0
	3 '- 6 "	90.0	90.0	90.0	90.0
	4 '- 0 "	90.0	90.0	90.0	90.0
	4 '- 1 "	90.0	90.0	90.0	90.0
	5 '- 0 "	90.0	90.0	90.0	90.0
10 '- 6 "	3 '- 0 "	90.0	90.0	90.0	90.0
	3 '- 6 "	90.0	90.0	90.0	90.0
	4 '- 0 "	90.0	90.0	90.0	90.0
	4 '- 1 "	90.0	90.0	90.0	90.0
	5 '- 0 "	90.0	90.0	90.0	90.0
11 '- 0 "	3 '- 0 "	90.0	90.0	90.0	90.0
	3 '- 6 "	90.0	90.0	90.0	90.0
	4 '- 0 "	90.0	90.0	90.0	90.0
	4 '- 1 "	90.0	90.0	90.0	90.0
	5 '- 0 "	90.0	90.0	90.0	90.0
11 '- 6 "	3 '- 0 "	90.0	90.0	90.0	90.0
	3 '- 6 "	90.0	90.0	90.0	90.0
	4 '- 0 "	90.0	90.0	90.0	90.0
	4 '- 1 "	90.0	90.0	90.0	90.0
	5 '- 0 "	90.0	90.0	90.0	90.0
12 '- 0 "	3 '- 0 "	90.0	90.0	90.0	90.0
	3 '- 6 "	90.0	90.0	90.0	90.0
	4 '- 0 "	90.0	90.0	90.0	90.0
	4 '- 1 "	90.0	90.0	90.0	90.0
	5 '- 0 "	90.0	90.0	90.0	90.0
12 '- 6 "	3 '- 0 "	90.0	90.0	90.0	90.0
	3 '- 6 "	90.0	90.0	90.0	90.0
	4 '- 0 "	90.0	90.0	90.0	90.0
	4 '- 1 "	90.0	90.0	90.0	90.0
	5 '- 0 "	90.0	90.0	88.5	90.0

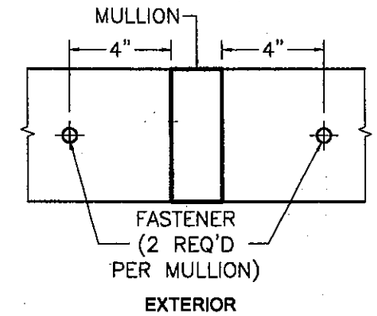

SCHEMATIC CONNECTION DETAIL *

* SEE CONNECTION DETAILS ON SHEETS 16 & 22 FOR FASTENERS QUANTITY & LOCATIONS AT MULLION.

FASTENERS TYPES & SUBSTRATES REQUIREMENTS

A - 1/2"Ø HILTI KWIK BOLT TZ ANCHOR W/ 3 1/4" Min. EMBEDMENT INTO 8" Min. THICK POURED CONCRETE (Min. f'c = 3 ksi) BEYOND ANY FINISH MATERIAL, W/ 6" MIN. EDGE DISTANCE.

B - 1/2"Ø HILTI KWIK BOLT TZ ANCHOR W/ 3 1/4" Min. EMBEDMENT INTO 6" Min. THICK POURED CONCRETE (Min. f'c = 3 ksi) BEYOND ANY FINISH MATERIAL, W/ 7 1/2" MIN. EDGE DISTANCE.

C - 1/2"Ø HILTI HUS-H SCREW ANCHOR W/ 3" Min. EMBEDMENT INTO 4" Min. THICK POURED CONCRETE (Min. f'c = 3 ksi) BEYOND ANY FINISH MATERIAL, W/ 3 3/4" MIN. EDGE DISTANCE.

D - 1/2"Ø-13 TYPE "F" GRADE 5 BOLT TO 1/4" MIN. THK. ASTM A-38 STEEL W/ 1" Min. EDGE DISTANCE OR 1/2"Ø -13 SAE GALVANIZED STEEL GRADE 5 HHB THRU BOLT W/ NUT & LOCK WASHER TO 1/4" Min. THK. ASTM A-36 STEEL W/ 1" MIN. EDGE DISTANCE.

FLORIDA BUILDING CODE (High Velocity Hurricane Zone)

M.C.V. DRAWN BY | 01/14/10 DATE | 10-014 DRAWING No | SHEET 12 OF 33

HR-251 SSG CAPTURED CURTAIN WALL SYSTEM LARGE & SMALL MISSILE WITH INSULATING LAMINATED GLASS

Oldcastle BuildingEnvelope™
803 Airport Rd - Terrell, TX 75160
www.OldcastleBE.com - Phone 800-869-4567

REV. No.	DESCRIPTION	DATE	REV. No.	DESCRIPTION	DATE
1	GENERAL	01/04/11	-	-	-
-	-	-	-	-	-

©2010 TILTECO, INC

TILTECO INC.
TILLIT TESTING & ENGINEERING COMPANY
6355 N.W. 36th. St. Ste. 305, VIRGINIA GARDENS, FL 33166
Phone : (305)871-1530 . Fax : (305)871-1531
e-mail: tilteco@aol.com
EB-0006719
WALTER A. TILLIT Jr. P.E.
FLORIDA Lic. # 44167

WALTER A. TILLIT JR. LICENSE No. 44167 STATE OF FLORIDA PROFESSIONAL ENGINEER

P.E. SEAL/SIGNATURE/DATE

PRODUCT REVISED as complying with the Florida Building Code
Acceptance No 10-0331.07
Expiration Date FEB 14 2016
By Miami-Dade Product Control

MIAMI-DADE COUNTY

MAXIMUM PRESSURE RATING FOR TWIN SPAN MULLION & JAMB MULLION HEAD ANCHOR CONNECTIONS

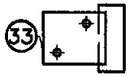

TWIN SPAN JAMB MULLION : HEAD CONNECTION *
W/ (1) 6"x 3 1/2" x 4 1/4" LONG ANCHOR #33

TYPE 1 **		MAXIMUM PRESSURE RATING W (psf)			
MAXIMUM MULLION SPAN	EFFECTIVE SPACING	POURED CONCRETE (Min. f'c = 3ksi) SUBSTRATE			1/4" Min. THK ASTM A-36 STEEL SUBSTRATE
		FASTENERS TYPES			FASTENERS
"L" (ft-in)	"b" (ft-in)	A	B	C	D
8 '-0 "	3 '-0 "	81.4	84.9	90.0	90.0
	3 '-6 "	69.8	72.8	89.8	90.0
	4 '-0 "	61.0	63.7	78.6	90.0
	4 '-1 "	60.0	62.6	77.3	90.0
	5 '-0 "	48.8	50.9	62.9	90.0
8 '-6 "	3 '-0 "	76.6	79.9	90.0	90.0
	3 '-6 "	65.6	68.5	84.5	90.0
	4 '-0 "	57.4	59.9	74.0	90.0
	4 '-1 "	56.5	59.0	72.8	90.0
	5 '-0 "	46.0	48.0	59.2	90.0
9 '-0 "	3 '-0 "	72.3	75.5	90.0	90.0
	3 '-6 "	62.0	64.7	79.8	90.0
	4 '-0 "	54.3	56.6	69.9	90.0
	4 '-1 "	53.4	55.7	68.7	90.0
	5 '-0 "	43.4	45.3	55.9	90.0
9 '-6 "	3 '-0 "	68.5	71.5	88.2	90.0
	3 '-6 "	58.7	61.3	75.6	90.0
	4 '-0 "	51.4	53.6	66.2	90.0
	4 '-1 "	50.5	52.7	65.1	90.0
	5 '-0 "	41.1	42.9	52.9	90.0
10 '-0 "	3 '-0 "	65.1	67.9	83.8	90.0
	3 '-6 "	55.8	58.2	71.9	90.0
	4 '-0 "	48.8	50.9	62.9	90.0
	4 '-1 "	48.0	50.1	61.8	90.0
	5 '-0 "	39.1	40.8	50.3	90.0
10 '-6 "	3 '-0 "	62.0	64.7	79.8	90.0
	3 '-6 "	53.1	55.5	68.4	90.0
	4 '-0 "	46.5	48.5	59.9	90.0
	4 '-1 "	45.7	47.7	58.9	90.0
	5 '-0 "	37.2	38.8	47.9	90.0
11 '-0 "	3 '-0 "	59.2	61.8	76.2	90.0
	3 '-6 "	50.7	52.9	65.3	90.0
	4 '-0 "	44.4	46.3	57.2	90.0
	4 '-1 "	43.7	45.6	56.2	90.0
	5 '-0 "	35.5	37.1	45.7	90.0
11 '-6 "	3 '-0 "	56.6	59.1	72.9	90.0
	3 '-6 "	48.5	50.6	62.5	90.0
	4 '-0 "	42.5	44.3	54.7	90.0
	4 '-1 "	41.8	43.6	53.8	90.0
	5 '-0 "	34.0	35.4	43.7	90.0
12 '-0 "	3 '-0 "	54.3	56.6	69.9	90.0
	3 '-6 "	46.5	48.5	59.9	90.0
	4 '-0 "	40.7	42.5	52.4	90.0
	4 '-1 "	40.0	41.8	51.5	90.0
	5 '-0 "	32.6	34.0	41.9	90.0
12 '-6 "	3 '-0 "	52.1	54.3	67.1	90.0
	3 '-6 "	44.6	46.6	57.5	90.0
	4 '-0 "	39.1	40.6	50.3	90.0
	4 '-1 "	38.4	40.1	49.5	90.0
	5 '-0 "	31.2	32.6	40.2	90.0

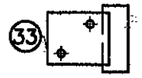

TWIN SPAN JAMB MULLION : HEAD CONNECTION *
W/ (1) 6"x 3 1/2" x 4 1/4" LONG ANCHOR #33

TYPE 2 **		MAXIMUM PRESSURE RATING W (psf)			
MAXIMUM MULLION SPAN	EFFECTIVE SPACING	POURED CONCRETE (Min. f'c = 3ksi) SUBSTRATE			1/4" Min. THK ASTM A-36 STEEL SUBSTRATE
		FASTENERS TYPES			FASTENERS
"L" (ft-in)	"b" (ft-in)	A	B	C	D
6 '-0 "	3 '-0 "	72.7	75.8	90.0	90.0
	3 '-6 "	62.3	65.0	80.2	90.0
	4 '-0 "	54.5	56.9	70.2	90.0
	4 '-1 "	53.6	55.9	69.0	90.0
	5 '-0 "	43.6	45.5	56.1	90.0
6 '-6 "	3 '-0 "	68.4	71.4	88.1	90.0
	3 '-6 "	58.6	61.2	75.5	90.0
	4 '-0 "	51.3	53.5	66.0	90.0
	4 '-1 "	50.4	52.6	65.0	90.0
	5 '-0 "	41.0	42.8	52.8	90.0
9 '-0 "	3 '-0 "	64.6	67.4	83.2	90.0
	3 '-6 "	55.4	57.8	71.3	90.0
	4 '-0 "	48.4	50.5	62.4	90.0
	4 '-1 "	47.6	49.7	61.3	90.0
	5 '-0 "	38.8	40.4	49.9	90.0
9 '-6 "	3 '-0 "	61.2	63.8	78.8	90.0
	3 '-6 "	52.4	54.7	67.5	90.0
	4 '-0 "	45.9	47.9	59.1	90.0
	4 '-1 "	45.1	47.1	58.1	90.0
	5 '-0 "	36.7	38.3	47.3	90.0
10 '-0 "	3 '-0 "	58.1	60.7	74.9	90.0
	3 '-6 "	49.6	52.0	64.2	90.0
	4 '-0 "	43.6	45.5	56.1	90.0
	4 '-1 "	42.9	44.7	55.2	90.0
	5 '-0 "	34.9	36.4	44.9	90.0
10 '-6 "	3 '-0 "	55.4	57.8	71.3	90.0
	3 '-6 "	47.4	49.5	61.1	90.0
	4 '-0 "	41.5	43.3	53.5	90.0
	4 '-1 "	40.8	42.6	52.6	90.0
	5 '-6 "	30.2	31.5	38.9	89.5
11 '-0 "	3 '-0 "	52.8	55.1	68.0	90.0
	3 '-6 "	45.3	47.3	58.3	90.0
	4 '-0 "	39.6	41.4	51.0	90.0
	4 '-1 "	39.0	40.7	50.2	90.0
	5 '-0 "	31.7	33.1	40.8	90.0
11 '-6 "	3 '-0 "	50.5	52.7	65.1	90.0
	3 '-6 "	43.3	45.2	55.8	90.0
	4 '-0 "	37.9	39.6	48.8	90.0
	4 '-1 "	37.3	36.9	48.0	90.0
	5 '-0 "	30.3	31.6	39.1	89.9
12 '-0 "	3 '-0 "	48.4	50.5	62.4	90.0
	3 '-6 "	41.5	43.3	53.5	90.0
	4 '-0 "	36.3	37.9	46.6	90.0
	4 '-1 "	35.7	37.3	46.0	90.0
	5 '-0 "	29.1	30.3	37.4	86.1
12 '-6 "	3 '-0 "	46.5	48.5	59.9	90.0
	3 '-6 "	39.9	41.6	51.3	90.0
	4 '-0 "	34.9	36.4	44.9	90.0
	4 '-1 "	34.3	35.8	44.2	90.0
	5 '-0 "	27.9	29.1	35.9	82.7

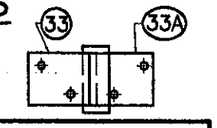

TWIN SPAN MULLION: HEAD CONNECTION *
W/ (2) 6"x 3 1/2" x 4 1/4" LONG ANCHOR #33

TYPE 1 & 2 **		MAXIMUM PRESSURE RATING W (psf)			
MAXIMUM MULLION SPAN	EFFECTIVE SPACING	POURED CONCRETE (Min. f'c = 3ksi) SUBSTRATE			1/4" Min. THK ASTM A-36 STEEL SUBSTRATE
		FASTENERS TYPES			FASTENERS
"L" (ft-in)	"b" (ft-in)	A	B	C	D
8 '-0 "	3 '-0 "	90.0	90.0	90.0	90.0
	3 '-6 "	90.0	90.0	90.0	90.0
	4 '-0 "	90.0	90.0	90.0	90.0
	4 '-1 "	90.0	90.0	90.0	90.0
	5 '-0 "	90.0	90.0	90.0	90.0
8 '-6 "	3 '-0 "	90.0	90.0	90.0	90.0
	3 '-6 "	90.0	90.0	90.0	90.0
	4 '-0 "	90.0	90.0	90.0	90.0
	4 '-1 "	90.0	90.0	90.0	90.0
	5 '-0 "	90.0	90.0	90.0	90.0
9 '-0 "	3 '-0 "	90.0	90.0	90.0	90.0
	3 '-6 "	90.0	90.0	90.0	90.0
	4 '-0 "	90.0	90.0	90.0	90.0
	4 '-1 "	90.0	90.0	90.0	90.0
	5 '-0 "	90.0	90.0	90.0	90.0
9 '-6 "	3 '-0 "	90.0	90.0	90.0	90.0
	3 '-6 "	90.0	90.0	90.0	90.0
	4 '-0 "	90.0	90.0	90.0	90.0
	4 '-1 "	90.0	90.0	90.0	90.0
	5 '-0 "	90.0	90.0	90.0	90.0
10 '-0 "	3 '-0 "	90.0	90.0	90.0	90.0
	3 '-6 "	90.0	90.0	90.0	90.0
	4 '-0 "	90.0	90.0	90.0	90.0
	4 '-1 "	90.0	90.0	90.0	90.0
	5 '-0 "	90.0	90.0	90.0	90.0
10 '-6 "	3 '-0 "	90.0	90.0	90.0	90.0
	3 '-6 "	90.0	90.0	90.0	90.0
	4 '-0 "	90.0	90.0	90.0	90.0
	4 '-1 "	90.0	90.0	90.0	90.0
	5 '-0 "	90.0	90.0	90.0	90.0
11 '-0 "	3 '-0 "	90.0	90.0	90.0	90.0
	3 '-6 "	90.0	90.0	90.0	90.0
	4 '-0 "	90.0	90.0	90.0	90.0
	4 '-1 "	90.0	90.0	90.0	90.0
	5 '-0 "	90.0	90.0	90.0	90.0
11 '-6 "	3 '-0 "	90.0	90.0	90.0	90.0
	3 '-6 "	90.0	90.0	90.0	90.0
	4 '-0 "	90.0	90.0	90.0	90.0
	4 '-1 "	90.0	90.0	90.0	90.0
	5 '-0 "	90.0	90.0	90.0	90.0
12 '-0 "	3 '-0 "	90.0	90.0	90.0	90.0
	3 '-6 "	90.0	90.0	90.0	90.0
	4 '-0 "	90.0	90.0	90.0	90.0
	4 '-1 "	90.0	90.0	90.0	90.0
	5 '-0 "	90.0	90.0	90.0	90.0
12 '-6 "	3 '-0 "	90.0	90.0	90.0	90.0
	3 '-6 "	90.0	90.0	90.0	90.0
	4 '-0 "	90.0	90.0	90.0	90.0
	4 '-1 "	90.0	90.0	90.0	90.0
	5 '-0 "	90.0	90.0	90.0	90.0

* SEE CONNECTION DETAILS ON SHEETS 23, 24 & 25 FOR FASTENERS QUANTITY & LOCATIONS AT MULLION ₮.

** TYPE 1 CONNECTION:

CORRESPONDS TO CONTINUOUS TWIN MULLION SPAN INSTALLATIONS.

TYPE 2 CONNECTION:

CORRESPONDS TO SPLICED TWIN MULLION SPAN INSTALLATIONS.

FASTENERS TYPES & SUBSTRATES REQUIREMENTS

A - 1/2"Ø HILTI KWIK BOLT TZ ANCHOR W/ 3 1/4" Min. EMBEDMENT INTO 8" Min. THICK POURED CONCRETE (Min. f'c = 3 ksi) BEYOND ANY FINISH MATERIAL, W/ 6" MIN. EDGE DISTANCE.

B - 1/2"Ø HILTI KWIK BOLT TZ ANCHOR W/ 3 1/4" Min. EMBEDMENT INTO 6" Min. THICK POURED CONCRETE (Min. f'c = 3 ksi) BEYOND ANY FINISH MATERIAL, W/ 7 1/2" MIN. EDGE DISTANCE.

C - 1/2"Ø HILTI HUS-H SCREW ANCHOR W/ 3" Min. EMBEDMENT INTO 4" Min. THICK POURED CONCRETE (Min. f'c = 3 ksi) BEYOND ANY FINISH MATERIAL, W/ 3 3/4" MIN. EDGE DISTANCE.

D - 1/2"Ø-13 TYPE "F" GRADE 5 BOLT TO 1/4" MIN. THK. ASTM A-36 STEEL W/ 1" MIN. EDGE DISTANCE OR 1/2"Ø -13 SAE GALVANIZED STEEL GRADE 5 HHB THRU BOLT W/ NUT & LOCK WASHER TO 1/4" MIN. THK. ASTM A-36 STEEL W/ 1" MIN. EDGE DISTANCE.

₮ MAX. PRESSURE RATING FOR JAMB CONNECTION @ HEAD W/ ANCHOR (33) IS ± 100 psf FOR SINGLE SPAN CURTAIN WALL AND ±90 psf FOR TWIN SPAN CURTAIN WALL, VALID FOR ALL EFFECTIVE WIDTHS. SEE CONNECTION DETAILS ON SHEET 25 FOR FASTENERS QUANTITY AND LOCATION AT JAMB.

FLORIDA BUILDING CODE (High Velocity Hurricane Zone)

HR-251 SSG CAPTURED CURTAIN WALL SYSTEM LARGE & SMALL MISSILE WITH INSULATING LAMINATED GLASS

Oldcastle BuildingEnvelope™
803 Airport Rd - Terrell, TX 75160
www.OldcastleBE.com - Phone 800-869-4567

REV. No	DESCRIPTION	DATE	REV. No	DESCRIPTION	DATE
1	GENERAL	01/04/10	-	-	-
-	-	-	-	-	-

M.C.V. DRAWN BY
01/14/10 DATE
10-014 DRAWING No
SHEET 13 OF 33

©2010 TILTECO, INC

TILTECO INC.
TILLIT TESTING & ENGINEERING COMPANY
6355 N.W. 36th. St. Ste. 305, VIRGINIA GARDENS, FL 33166
Phone : (305)871-1530 . Fax : (305)871-1531
e-mail: tilteco@aol.com
EB-0006719
WALTER A. TILLIT Jr. P.E.
FLORIDA Lic. # 44167

WALTER A. TILLIT JR. LICENSE No. 44167 STATE OF FLORIDA PROFESSIONAL ENGINEER

P.E. SEAL SIGNATURE DATE

PRODUCT REVISED
as complying with the Florida
Building Code
Acceptance No 10-0331.07
Expiration Date FEB 11, 2016
By
Miami-Dade Product Control

MIAMI-DADE COUNTY

MAXIMUM PRESSURE RATING FOR JAMBS AT SINGLE SPAN CURTAIN WALL FASTENED TO EXISTING STRUCTURE W/ 3/8"Ø FASTENERS (SEE ALSO SHEET 15)

OPTION #2 : 2 FASTENERS CONNECTION

MAXIMUM MULLION SPAN "L" (ft-in)	EFFECTIVE SPACING b = S_s/2 * "b" (ft-in)	MAXIMUM DESIGN LOAD W (psf)					
		POURED CONCRETE (Min. f'c = 3ksi) SUBSTRATE			GROUT FILLED CONCRETE BLOCK SUBSTRATE		1/4" Min. THK ASTM A-36 STEEL SUBSTRATE
		FASTENER TYPES			FASTENER TYPES		FASTENER
		E	F	G	H	I	J
8 '- 0 "	2 '- 0 "	90.0	90.0	90.0	90.0	90.0	90.0
	2 '- 6 "	90.0	90.0	78.5	90.0	78.5	90.0
	3 '- 3 "	74.0	74.0	60.4	74.0	60.4	83.8
8 '- 8 "	2 '- 0 "	90.0	90.0	90.0	90.0	90.0	90.0
	2 '- 8 "	90.0	90.0	73.9	90.0	73.9	90.0
	3 '- 3 "	69.7	69.7	56.8	69.7	56.8	78.9
9 '- 0 "	2 '- 0 "	90.0	90.0	87.2	90.0	87.2	90.0
	2 '- 8 "	85.5	85.5	69.8	85.5	69.8	90.0
	3 '- 3 "	65.8	65.8	53.7	65.8	53.7	74.5
9 '- 8 "	2 '- 0 "	90.0	90.0	82.6	90.0	82.6	90.0
	2 '- 8 "	81.0	81.0	66.1	81.0	66.1	90.0
	3 '- 3 "	62.3	62.3	50.9	62.3	50.9	70.6
10 '- 0 "	2 '- 0 "	90.0	90.0	78.5	90.0	78.5	90.0
	2 '- 6 "	77.0	77.0	62.8	77.0	62.8	87.2
	3 '- 3 "	59.2	59.2	48.3	59.2	48.3	67.0
10 '- 8 "	2 '- 0 "	90.0	90.0	74.8	90.0	74.8	90.0
	2 '- 6 "	73.3	73.3	59.8	73.3	59.8	83.0
	3 '- 3 "	56.4	56.4	46.0	56.4	46.0	63.9
11 '- 0 "	2 '- 0 "	87.5	87.5	71.4	87.5	71.4	90.0
	2 '- 6 "	70.0	70.0	57.1	70.0	57.1	79.2
	3 '- 3 "	53.8	53.8	43.9	53.8	43.9	60.9
11 '- 6 "	2 '- 0 "	83.7	83.7	68.3	83.7	68.3	90.0
	2 '- 6 "	66.9	66.9	54.6	66.9	54.6	75.8
	3 '- 3 "	51.5	51.5	42.0	51.5	42.0	58.3
12 '- 0 "	2 '- 0 "	80.2	80.2	65.4	80.2	65.4	90.0
	2 '- 6 "	64.2	64.2	52.3	64.2	52.3	72.6
	3 '- 3 "	49.4	49.4	40.3	49.4	40.3	55.9

OPTION #3 : 3 FASTENERS CONNECTION

MAXIMUM MULLION SPAN "L" (ft-in)	EFFECTIVE SPACING b = S_s/2 * "b" (ft-in)	MAXIMUM DESIGN LOAD W (psf)					
		POURED CONCRETE (Min. f'c = 3ksi) SUBSTRATE			GROUT FILLED CONCRETE BLOCK SUBSTRATE		1/4" Min. THK ASTM A-36 STEEL SUBSTRATE
		FASTENER TYPES			FASTENER TYPES		FASTENER
		E	F	G	H	I	J
8 '- 0 "	2 '- 0 "	90.0	90.0	90.0	90.0	90.0	90.0
	2 '- 6 "	90.0	90.0	90.0	90.0	90.0	90.0
	3 '- 3 "	90.0	90.0	90.0	90.0	90.0	90.0
8 '- 6 "	2 '- 0 "	90.0	90.0	90.0	90.0	90.0	90.0
	2 '- 6 "	90.0	90.0	90.0	90.0	90.0	90.0
	3 '- 3 "	90.0	90.0	85.3	90.0	85.3	90.0
9 '- 0 "	2 '- 0 "	90.0	90.0	90.0	90.0	90.0	90.0
	2 '- 6 "	90.0	90.0	90.0	90.0	90.0	90.0
	3 '- 3 "	90.0	90.0	80.5	90.0	80.5	90.0
9 '- 8 "	2 '- 0 "	90.0	90.0	90.0	90.0	90.0	90.0
	2 '- 6 "	90.0	90.0	90.0	90.0	90.0	90.0
	3 '- 3 "	90.0	90.0	76.3	90.0	76.3	90.0
10 '- 0 "	2 '- 0 "	90.0	90.0	90.0	90.0	90.0	90.0
	2 '- 6 "	90.0	90.0	90.0	90.0	90.0	90.0
	3 '- 3 "	88.8	88.8	72.5	88.8	72.5	90.0
10 '- 6 "	2 '- 0 "	90.0	90.0	90.0	90.0	90.0	90.0
	2 '- 6 "	90.0	90.0	89.7	90.0	89.7	90.0
	3 '- 3 "	84.6	84.6	69.0	84.6	69.0	90.0
11 '- 0 "	2 '- 0 "	90.0	90.0	90.0	90.0	90.0	90.0
	2 '- 6 "	90.0	90.0	85.7	90.0	85.7	90.0
	3 '- 3 "	80.8	80.8	65.9	80.8	65.9	90.0
11 '- 6 "	2 '- 0 "	90.0	90.0	90.0	90.0	90.0	90.0
	2 '- 6 "	90.0	90.0	81.9	90.0	81.9	90.0
	3 '- 3 "	77.2	77.2	63.0	77.2	63.0	87.4
12 '- 0 "	2 '- 0 "	90.0	90.0	90.0	90.0	90.0	90.0
	2 '- 6 "	90.0	90.0	76.5	90.0	76.5	90.0
	3 '- 3 "	74.0	74.0	60.4	74.0	60.4	83.8

FASTENER TYPES & SUBSTRATES REQUIREMENTS:

E - 3/8"Ø HILTI KWIK BOLT TZ ANCHOR W/ 2" Min. EMBEDMENT INTO POURED CONCRETE (Min. f'c = 3 ksi) BEYOND ANY FINISH MATERIAL, W/ 4" MIN. EDGE DISTANCE.

F - 3/8"Ø HILTI KWIK BOLT 3 ANCHOR W/ 2 1/2" Min. EMBEDMENT INTO PDURED CONCRETE (Min. f'c = 3 ksi) BEYOND ANY FINISH MATERIAL, W/ 4" MIN. EDGE DISTANCE.

G - 3/8"Ø HILTI HUS-H SCREW ANCHOR W/ 2 3/4" Min. EMBEDMENT INTO POURED CONCRETE (Min. f'c = 3 ksi) BEYOND ANY FINISH MATERIAL, W/ 5" MIN. EDGE DISTANCE.

H - 3/8"Ø HILTI KWIK BOLT 3 ANCHOR W/ 2 1/2" Min. EMBEDMENT INTO GROUT FILLED CONCRETE BLOCK BEYOND ANY FINISH MATERIAL, W/ 4" MIN. EDGE DISTANCE.

I - 3/8"Ø HILTI HUS-H SCREW ANCHOR W/ 3" Min. EMBEDMENT INTO GROUT FILLED CONCRETE BLOCK BEYOND ANY FINISH MATERIAL, W/ 3 3/4" MIN. EDGE DISTANCE.

J - 3/8"Ø-13 TYPE "F" GRADE 5 BOLT TO 1/4" MIN. THK. ASTM A-36 STEEL W/ 1" MIN. EDGE DISTANCE OR 3/8"Ø-13 SAE GRADE 5, GALVANIZED STEEL BOLT W/ LOCK WASHER & NUT TO 1/4" Min. THK. ASTM A-36 STEEL & MIN. E.D. = 3/4".

FASTENERS LOCATION

OPTION # 1 (ELEVATION)
(1) FASTENER CONNECTION

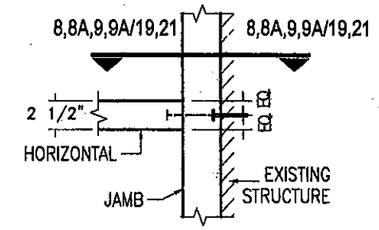

OPTION # 2 (ELEVATION)
(2) FASTENERS CONNECTION

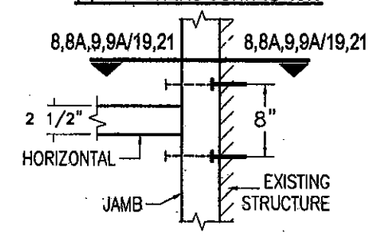

OPTION # 3 (ELEVATION)
(3) FASTENERS CONNECTION

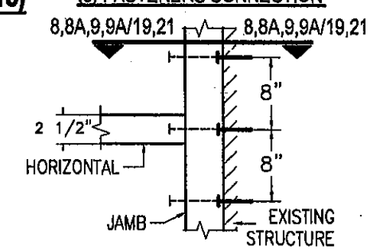

MAXIMUM PRESSURE RATING FOR JAMBS AT SINGLE SPAN CURTAIN WALL FASTENED TO EXISTING STRUCTURE W/ 1/2"Ø FASTENERS (SEE ALSO SHEET 15)

OPTION #1 : 2 FASTENER CONNECTION

MAXIMUM MULLION SPAN "L" (ft-in)	EFFECTIVE SPACING b = S_s/2 * "b" (ft-in)	MAXIMUM PRESSURE RATING W (psf)					
		POURED CONCRETE (Min. f'c = 3ksi) SUBSTRATE			GROUT FILLED CONCRETE BLOCK SUBSTRATE		1/4" Min. THK ASTM A-36 STEEL SUBSTRATE
		FASTENER TYPES			FASTENER TYPES		FASTENER
		K	L	M	N	O	P
6 '- 0 "	2 '- 0 "	90.0	90.0	90.0	90.0	90.0	90.0
	2 '- 6 "	90.0	90.0	90.0	90.0	90.0	90.0
	3 '- 3 "	90.0	90.0	90.0	90.0	73.1	90.0
8 '- 6 "	2 '- 0 "	90.0	90.0	90.0	90.0	90.0	90.0
	2 '- 6 "	90.0	90.0	90.0	90.0	89.4	90.0
	3 '- 3 "	90.0	90.0	90.0	90.0	68.8	90.0
9 '- 0 "	2 '- 0 "	90.0	90.0	90.0	90.0	90.0	90.0
	2 '- 6 "	90.0	90.0	90.0	90.0	84.4	90.0
	3 '- 3 "	90.0	90.0	90.0	90.0	65.0	90.0
9 '- 6 "	2 '- 0 "	90.0	90.0	90.0	90.0	90.0	90.0
	2 '- 6 "	90.0	90.0	90.0	90.0	80.0	90.0
	3 '- 3 "	90.0	90.0	90.0	90.0	61.5	90.0
10 '- 0 "	2 '- 0 "	90.0	90.0	90.0	90.0	90.0	90.0
	2 '- 6 "	90.0	90.0	90.0	90.0	76.0	90.0
	3 '- 3 "	90.0	90.0	90.0	90.0	58.5	90.0
10 '- 6 "	2 '- 0 "	90.0	90.0	90.0	90.0	90.0	90.0
	2 '- 6 "	90.0	90.0	90.0	90.0	72.4	90.0
	3 '- 3 "	90.0	90.0	90.0	90.0	55.7	90.0
11 '- 0 "	2 '- 0 "	90.0	90.0	90.0	90.0	86.4	90.0
	2 '- 6 "	90.0	90.0	90.0	90.0	69.1	90.0
	3 '- 3 "	90.0	90.0	90.0	90.0	53.1	90.0
11 '- 6 "	2 '- 0 "	90.0	90.0	90.0	90.0	82.6	90.0
	2 '- 6 "	90.0	90.0	90.0	90.0	66.1	90.0
	3 '- 3 "	90.0	90.0	90.0	90.0	50.8	90.0
12 '- 0 "	2 '- 0 "	90.0	90.0	90.0	90.0	79.2	90.0
	2 '- 6 "	90.0	90.0	90.0	90.0	63.3	90.0
	3 '- 3 "	90.0	90.0	90.0	90.0	48.7	90.0

OPTION #2 : 3 FASTENERS CONNECTION

MAXIMUM MULLION SPAN "L" (ft-in)	EFFECTIVE SPACING b = S_s/2 * "b" (ft-in)	MAXIMUM PRESSURE RATING W (psf)					
		POURED CONCRETE (Min. f'c = 3ksi) SUBSTRATE			GROUT FILLED CONCRETE BLOCK SUBSTRATE		1/4" Min. THK ASTM A-36 STEEL SUBSTRATE
		FASTENER TYPES			FASTENER TYPES		FASTENER
		K	L	M	N	O	P
6 '- 0 "	2 '- 0 "	90.0	90.0	90.0	90.0	90.0	90.0
	2 '- 6 "	90.0	90.0	90.0	90.0	90.0	90.0
	3 '- 3 "	90.0	90.0	90.0	90.0	90.0	90.0
6 '- 8 "	2 '- 0 "	90.0	90.0	90.0	90.0	90.0	90.0
	2 '- 6 "	90.0	90.0	90.0	90.0	90.0	90.0
	3 '- 3 "	90.0	90.0	90.0	90.0	90.0	90.0
9 '- 0 "	2 '- 0 "	90.0	90.0	90.0	90.0	90.0	90.0
	2 '- 6 "	90.0	90.0	90.0	90.0	90.0	90.0
	3 '- 3 "	90.0	90.0	90.0	90.0	90.0	90.0
9 '- 6 "	2 '- 0 "	90.0	90.0	90.0	90.0	90.0	90.0
	2 '- 6 "	90.0	90.0	90.0	90.0	90.0	90.0
	3 '- 3 "	90.0	90.0	90.0	90.0	90.0	90.0
10 '- 0 "	2 '- 0 "	90.0	90.0	90.0	90.0	90.0	90.0
	2 '- 6 "	90.0	90.0	90.0	90.0	90.0	90.0
	3 '- 3 "	90.0	90.0	90.0	90.0	87.7	90.0
10 '- 6 "	2 '- 0 "	90.0	90.0	90.0	90.0	90.0	90.0
	2 '- 6 "	90.0	90.0	90.0	90.0	90.0	90.0
	3 '- 3 "	90.0	90.0	90.0	90.0	83.5	90.0
11 '- 0 "	2 '- 0 "	90.0	90.0	90.0	90.0	90.0	90.0
	2 '- 6 "	90.0	90.0	90.0	90.0	90.0	90.0
	3 '- 3 "	90.0	90.0	90.0	90.0	79.7	90.0
11 '- 6 "	2 '- 0 "	90.0	90.0	90.0	90.0	90.0	90.0
	2 '- 6 "	90.0	90.0	90.0	90.0	90.0	90.0
	3 '- 3 "	90.0	90.0	90.0	90.0	76.3	90.0
12 '- 0 "	2 '- 0 "	90.0	90.0	90.0	90.0	90.0	90.0
	2 '- 6 "	90.0	90.0	90.0	90.0	90.0	90.0
	3 '- 3 "	90.0	90.0	90.0	90.0	73.1	90.0

FASTENER TYPES & SUBSTRATES REQUIREMENTS:

K - 1/2"Ø HILTI KWIK BOLT TZ ANCHOR W/ 2" Min. EMBEDMENT INTO POURED CONCRETE (Min. f'c = 3 ksi) BEYOND ANY FINISH MATERIAL, W/ 4" MIN. EDGE DISTANCE.

L - 1/2"Ø HILTI KWIK BOLT 3 ANCHOR W/ 3 1/2" Min. EMBEDMENT INTO POURED CONCRETE (Min. f'c = 3 ksi) BEYOND ANY FINISH MATERIAL, W/ 4" MIN. EDGE DISTANCE.

M - 1/2"Ø HILTI HUS-H SCREW ANCHOR W/ 3" Min. EMBEDMENT INTO POURED CONCRETE (Min. f'c = 3 ksi) BEYOND ANY FINISH MATERIAL, W/ 4" MIN. EDGE DISTANCE.

N - 1/2"Ø HILTI KWIK BOLT 3 ANCHOR W/ 3 1/2" Min. EMBEDMENT INTO GROUT FILLED CONCRETE BLOCK BEYOND ANY FINISH MATERIAL, W/ 4" MIN. EDGE DISTANCE.

O - 1/2"Ø HILTI HUS-H SCREW ANCHOR W/ 3" Min. EMBEDMENT INTO GROUT FILLED CONCRETE BLOCK BEYOND ANY FINISH MATERIAL, W/ 3 3/4" MIN. EDGE DISTANCE.

P - 1/2"Ø-13 TYPE "F" GRADE 5 BOLT TO 1/4" MIN. THK. ASTM A-36 STEEL W/ 1" MIN. EDGE DISTANCE OR 1/2"Ø-13 SAE GRADE 5, GALVANIZED STEEL BOLT W/ LOCK WASHER & NUT TO 1/4" MIN. THK. ASTM A-36 STEEL & MIN. E.D. = 1".

* SEE SHEET 9 FOR EFFECTIVE SPACING DEFINITION AT ISOMETRIC

FLORIDA BUILDING CODE (High Velocity Hurricane Zone)

M.C.V. DRAWN BY
01/14/10 DATE
10-014 DRAWING No
SHEET 14 OF 33

HR-251 SSG CAPTURED CURTAIN WALL SYSTEM LARGE & SMALL MISSILE WITH INSULATING LAMINATED GLASS

Oldcastle BuildingEnvelope™
803 Airport Rd - Terrell, TX 75160
www.OldcastleBE.com - Phone 800-869-4567

REV. No.	DESCRIPTION	DATE	REV. No.	DESCRIPTION	DATE
1	GENERAL	01/04/11	-	-	-
-	SCHEMATIC REDO	02/10/11	-	-	-

©2010 TILTECO, INC

TILTECO INC.
TILLIT TESTING & ENGINEERING COMPANY
6355 N.W. 36th. St. Ste. 305, VIRGINIA GARDENS, FL 33166
Phone : (305)871-1530 , Fax : (305)871-1531
e-mail: tilteco@aol.com
EB-0006719
WALTER A. TILLIT Jr. P.E.
FLORIDA Lic. # 44167

WALTER A. TILLIT JR. LICENSE No. 44167 STATE OF FLORIDA PROFESSIONAL ENGINEER
P.E. SEAL & SIGNATURE REQUIRED

PRODUCT REVISED as complying with the Florida Building Code
Acceptance No 10-0331.07
Expiration Date FEB 19 2016
By Miami Dade Product Control

MIAMI-DADE COUNTY

MAXIMUM PRESSURE RATING FOR JAMBS AT TWIN SPAN CURTAIN WALL FASTENED TO EXISTING STRUCTURE W/ 3/8"Ø FASTENERS

OPTION #1 : 3 FASTENERS CONNECTION

MAXIMUM MULLION SPAN	EFFECTIVE SPACING $b = S_s/2$ *	MAXIMUM PRESSURE RATING W (psf)					
		POURED CONCRETE (Min. fc = 3ksi) SUBSTRATE			GROUT FILLED CONCRETE BLOCK SUBSTRATE		1/4" Min. THK ASTM A-36 STEEL SUBSTRATE
		FASTENER TYPES			FASTENER TYPES		FASTENER
"L" (ft-in)	"b" (ft-in)	E	F	G	H	I	J
8'-0"	2'-0"	57.5	57.5	58.6	57.5	58.6	81.3
	2'-6"	46.0	46.0	46.9	46.0	46.9	65.1
	3'-3"	35.4	35.4	36.1	35.4	36.1	50.0
8'-6"	2'-0"	57.0	57.0	58.1	57.0	58.1	80.6
	2'-6"	45.6	45.6	46.5	45.6	46.5	64.5
	3'-3"	35.1	35.1	35.7	35.1	35.7	49.6
9'-0"	2'-0"	55.8	55.8	56.9	55.8	56.9	79.0
	2'-6"	44.7	44.7	45.5	44.7	45.5	63.2
	3'-3"	34.4	34.4	35.0	34.4	35.0	48.6
9'-6"	2'-0"	54.4	54.4	55.4	54.4	55.4	76.9
	2'-6"	43.5	43.5	44.3	43.5	44.3	61.5
	3'-3"	33.4	33.4	34.1	33.4	34.1	47.3
10'-0"	2'-0"	52.7	52.7	53.8	52.7	53.8	74.6
	2'-6"	42.2	42.2	43.0	42.2	43.0	59.7
	3'-3"	32.4	32.4	33.1	32.4	33.1	45.9
10'-6"	2'-0"	51.0	51.0	52.0	51.0	52.0	72.2
	2'-6"	40.8	40.8	41.6	40.8	41.6	57.8
	3'-3"	31.4	31.4	32.0	31.4	32.0	44.4
11'-0"	2'-0"	49.3	49.3	50.3	49.3	50.3	69.8
	2'-6"	39.5	39.5	40.3	39.5	40.3	55.9
	3'-3"	30.4	30.4	31.0	30.4	31.0	43.0
11'-6"	2'-0"	47.7	47.7	48.6	47.7	48.6	67.5
	2'-6"	38.1	38.1	38.9	38.1	38.9	54.0
	3'-3"	29.3	29.3	29.9	29.3	29.9	41.5
12'-0"	2'-0"	46.1	46.1	47.0	46.1	47.0	65.2
	2'-6"	36.9	36.9	37.6	36.9	37.6	52.2
	3'-3"	28.4	28.4	28.9	28.4	28.9	40.1
12'-6"	2'-0"	44.5	44.5	45.4	44.5	45.4	63.0
	2'-6"	35.6	35.6	36.3	35.6	36.3	50.4
	3'-3"	27.4	27.4	28.0	27.4	28.0	38.8

OPTION #2 : 4 FASTENERS CONNECTION

MAXIMUM MULLION SPAN	EFFECTIVE SPACING $b = S_s/2$ *	MAXIMUM PRESSURE RATING W (psf)					
		POURED CONCRETE (Min. fc = 3ksi) SUBSTRATE			GROUT FILLED CONCRETE BLOCK SUBSTRATE		1/4" Min. THK ASTM A-36 STEEL SUBSTRATE
		FASTENER TYPES			FASTENER TYPES		FASTENER
"L" (ft-in)	"b" (ft-in)	E	F	G	H	I	J
8'-0"	2'-0"	76.6	76.6	78.1	76.6	78.1	90.0
	2'-6"	61.3	61.3	62.5	61.3	62.5	86.7
	3'-3"	47.2	47.2	48.1	47.2	48.1	66.7
8'-6"	2'-0"	76.0	76.0	77.5	76.0	77.5	90.0
	2'-6"	60.8	60.8	62.0	60.8	62.0	86.0
	3'-3"	46.7	46.7	47.7	46.7	47.7	66.1
9'-0"	2'-0"	74.4	74.4	75.9	74.4	75.9	90.0
	2'-6"	59.5	59.5	60.7	59.5	60.7	84.3
	3'-3"	45.8	45.8	46.7	45.8	46.7	64.8
9'-6"	2'-0"	72.5	72.5	73.9	72.5	73.9	90.0
	2'-6"	58.0	58.0	59.1	58.0	59.1	82.0
	3'-3"	44.6	44.6	45.5	44.6	45.5	63.1
10'-0"	2'-0"	70.3	70.3	71.7	70.3	71.7	90.0
	2'-6"	56.2	56.2	57.3	56.2	57.3	79.6
	3'-3"	43.3	43.3	44.1	43.3	44.1	61.2
10'-6"	2'-0"	68.0	68.0	69.4	68.0	69.4	90.0
	2'-6"	54.4	54.4	55.5	54.4	55.5	77.0
	3'-3"	41.9	41.9	42.7	41.9	42.7	59.3
11'-0"	2'-0"	65.8	65.8	67.1	65.8	67.1	90.0
	2'-6"	52.6	52.6	53.7	52.6	53.7	74.5
	3'-3"	40.5	40.5	41.3	40.5	41.3	57.3
11'-6"	2'-0"	63.6	63.6	64.8	63.6	64.8	90.0
	2'-6"	50.9	50.9	51.9	50.9	51.9	72.0
	3'-3"	39.1	39.1	39.9	39.1	39.9	55.4
12'-0"	2'-0"	61.4	61.4	62.7	61.4	62.7	86.9
	2'-6"	49.2	49.2	50.1	49.2	50.1	69.6
	3'-3"	37.8	37.8	38.6	37.8	38.6	53.5
12'-6"	2'-0"	59.4	59.4	60.6	59.4	60.6	84.0
	2'-6"	47.5	47.5	48.5	47.5	48.5	67.2
	3'-3"	36.5	36.5	37.3	36.5	37.3	51.7

FASTENER TYPES & SUBSTRATES REQUIREMENTS:

E - 3/8"Ø HILTI KWIK BOLT TZ ANCHOR W/ 2" Min. EMBEDMENT INTO POURED CONCRETE (Min. fc = 3 ksi) BEYOND ANY FINISH MATERIAL, W/ 4" MIN. EDGE DISTANCE.

F - 3/8"Ø HILTI KWIK BOLT 3 ANCHOR W/ 2 1/2" Min. EMBEDMENT INTO POURED CONCRETE (Min. fc = 3 ksi) BEYOND ANY FINISH MATERIAL, W/ 4" MIN. EDGE DISTANCE.

G - 3/8"Ø HILTI HUS-H SCREW ANCHOR W/ 2 3/4" Min. EMBEDMENT INTO POURED CONCRETE (Min. fc = 3 ksi) BEYOND ANY FINISH MATERIAL, W/ 5" MIN. EDGE DISTANCE.

H - 3/8"Ø HILTI KWIK BOLT 3 ANCHOR W/ 2 1/2" Min. EMBEDMENT INTO GROUT FILLED CONCRETE BLOCK BEYOND ANY FINISH MATERIAL, W/ 4" MIN. EDGE DISTANCE.

I - 3/8"Ø HILTI HUS-H SCREW ANCHOR W/ 3" Min. EMBEDMENT INTO GROUT FILLED CONCRETE BLOCK BEYOND ANY FINISH MATERIAL, W/ 3 3/4" MIN. EDGE DISTANCE.

J - 3/8"Ø-13 TYPE "F" GRADE 5 BOLT TO 1/4" MIN. THK. ASTM A-36 STEEL W/ 1" MIN. EDGE DISTANCE OR 3/8"Ø-13 SAE GRADE 5, GALVANIZED STEEL BOLT W/ LOCK WASHER & NUT TO 1/4" MIN. THK. ASTM A-36 STEEL & MIN. E.D. = 3/4".

FASTENERS LOCATION

OPTION # 1 (ELEVATION)
(3) FASTENERS CONNECTION

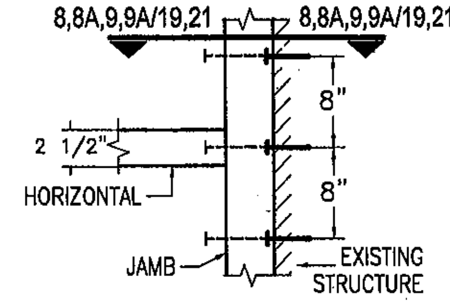

OPTION # 2 (ELEVATION)
(4) FASTENERS CONNECTION

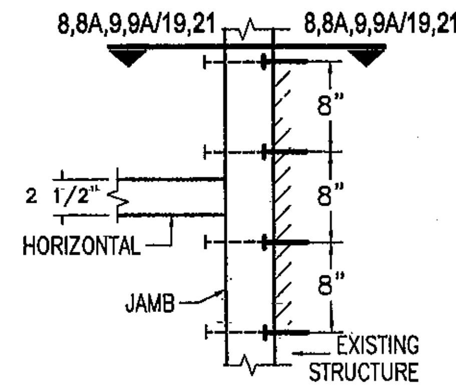

MAXIMUM PRESSURE RATING FOR JAMBS AT TWIN SPAN CURTAIN WALL FASTENED TO EXISTING STRUCTURE W/ 1/2"Ø FASTENERS

OPTION #1 : 3 FASTENERS CONNECTION

MAXIMUM MULLION SPAN	EFFECTIVE SPACING $b = S_s/2$ *	MAXIMUM PRESSURE RATING W (psf)					
		POURED CONCRETE (Min. fc = 3ksi) SUBSTRATE			GROUT FILLED CONCRETE BLOCK SUBSTRATE		1/4" Min. THK ASTM A-36 STEEL SUBSTRATE
		FASTENER TYPES			FASTENER TYPES		FASTENER
"L" (ft-in)	"b" (ft-in)	K	L	M	N	O	P
8'-0"	2'-0"	90.0	90.0	90.0	90.0	70.9	90.0
	2'-6"	90.0	90.0	90.0	90.0	56.7	90.0
	3'-3"	90.0	90.0	90.0	90.0	43.6	90.0
8'-6"	2'-0"	90.0	90.0	90.0	90.0	70.3	90.0
	2'-6"	90.0	90.0	90.0	90.0	56.2	90.0
	3'-3"	90.0	90.0	90.0	90.0	43.3	90.0
9'-0"	2'-0"	90.0	90.0	90.0	90.0	68.9	90.0
	2'-6"	90.0	90.0	90.0	90.0	55.1	90.0
	3'-3"	90.0	90.0	90.0	90.0	42.4	90.0
9'-6"	2'-0"	90.0	90.0	90.0	90.0	67.1	90.0
	2'-6"	90.0	90.0	90.0	90.0	53.7	90.0
	3'-3"	90.0	90.0	88.2	90.0	41.3	90.0
10'-0"	2'-0"	90.0	90.0	90.0	90.0	65.1	90.0
	2'-6"	90.0	90.0	90.0	90.0	52.0	90.0
	3'-3"	90.0	90.0	85.6	90.0	40.0	90.0
10'-6"	2'-0"	90.0	90.0	90.0	90.0	63.0	90.0
	2'-6"	90.0	90.0	90.0	90.0	50.4	90.0
	3'-3"	90.0	90.0	82.8	88.1	38.7	90.0
11'-0"	2'-0"	90.0	90.0	90.0	90.0	60.9	90.0
	2'-6"	90.0	90.0	90.0	90.0	48.7	90.0
	3'-3"	90.0	90.0	80.1	85.2	37.5	90.0
11'-6"	2'-0"	90.0	90.0	90.0	90.0	58.8	90.0
	2'-6"	90.0	90.0	90.0	90.0	47.1	90.0
	3'-3"	90.0	90.0	77.4	82.3	36.2	90.0
12'-0"	2'-0"	90.0	90.0	90.0	90.0	56.9	90.0
	2'-6"	90.0	90.0	90.0	90.0	45.5	90.0
	3'-3"	90.0	90.0	74.8	79.6	35.0	89.8
12'-6"	2'-0"	90.0	90.0	90.0	90.0	55.0	90.0
	2'-6"	90.0	90.0	90.0	90.0	44.0	90.0
	3'-3"	90.0	90.0	72.3	76.9	33.8	86.8

OPTION #2 : 4 FASTENERS CONNECTION

MAXIMUM MULLION SPAN	EFFECTIVE SPACING $b = S_s/2$ *	MAXIMUM PRESSURE RATING W (psf)					
		POURED CONCRETE (Min. fc = 3ksi) SUBSTRATE			GROUT FILLED CONCRETE BLOCK SUBSTRATE		1/4" Min. THK ASTM A-36 STEEL SUBSTRATE
		FASTENER TYPES			FASTENER TYPES		FASTENER
"L" (ft-in)	"b" (ft-in)	K	L	M	N	O	P
8'-0"	2'-0"	90.0	90.0	90.0	90.0	90.0	90.0
	2'-6"	90.0	90.0	90.0	90.0	75.6	90.0
	3'-3"	90.0	90.0	90.0	90.0	58.2	90.0
8'-6"	2'-0"	90.0	90.0	90.0	90.0	90.0	90.0
	2'-6"	90.0	90.0	90.0	90.0	75.0	90.0
	3'-3"	90.0	90.0	90.0	90.0	57.7	90.0
9'-0"	2'-0"	90.0	90.0	90.0	90.0	90.0	90.0
	2'-6"	90.0	90.0	90.0	90.0	73.5	90.0
	3'-3"	90.0	90.0	90.0	90.0	56.5	90.0
9'-6"	2'-0"	90.0	90.0	90.0	90.0	89.4	90.0
	2'-6"	90.0	90.0	90.0	90.0	71.5	90.0
	3'-3"	90.0	90.0	90.0	90.0	55.0	90.0
10'-0"	2'-0"	90.0	90.0	90.0	90.0	86.7	90.0
	2'-6"	90.0	90.0	90.0	90.0	69.4	90.0
	3'-3"	90.0	90.0	90.0	90.0	53.4	90.0
10'-6"	2'-0"	90.0	90.0	90.0	90.0	84.0	90.0
	2'-6"	90.0	90.0	90.0	90.0	67.2	90.0
	3'-3"	90.0	90.0	90.0	90.0	51.7	90.0
11'-0"	2'-0"	90.0	90.0	90.0	90.0	81.2	90.0
	2'-6"	90.0	90.0	90.0	90.0	64.9	90.0
	3'-3"	90.0	90.0	90.0	90.0	50.0	90.0
11'-6"	2'-0"	90.0	90.0	90.0	90.0	78.4	90.0
	2'-6"	90.0	90.0	90.0	90.0	62.8	90.0
	3'-3"	90.0	90.0	90.0	90.0	48.3	90.0
12'-0"	2'-0"	90.0	90.0	90.0	90.0	75.8	90.0
	2'-6"	90.0	90.0	90.0	90.0	60.7	90.0
	3'-3"	90.0	90.0	90.0	90.0	46.7	90.0
12'-6"	2'-0"	90.0	90.0	90.0	90.0	73.3	90.0
	2'-6"	90.0	90.0	90.0	90.0	58.6	90.0
	3'-3"	90.0	90.0	90.0	90.0	45.1	90.0

FASTENER TYPES & SUBSTRATES REQUIREMENTS:

K - 1/2"Ø HILTI KWIK BOLT TZ ANCHOR W/ 2" Min. EMBEDMENT INTO POURED CONCRETE (Min. fc = 3 ksi) BEYOND ANY FINISH MATERIAL, W/ 4" MIN. EDGE DISTANCE.

L - 1/2"Ø HILTI KWIK BOLT 3 ANCHOR W/ 3 1/2" Min. EMBEDMENT INTO POURED CONCRETE (Min. fc = 3 ksi) BEYOND ANY FINISH MATERIAL, W/ 4" MIN. EDGE DISTANCE.

M - 1/2"Ø HILTI HUS-H SCREW ANCHOR W/ 3" Min. EMBEDMENT INTO POURED CONCRETE (Min. fc = 3 ksi) BEYOND ANY FINISH MATERIAL, W/ 4" MIN. EDGE DISTANCE.

N - 1/2"Ø HILTI KWIK BOLT 3 ANCHOR W/ 3 1/2" Min. EMBEDMENT INTO GROUT FILLED CONCRETE BLOCK BEYOND ANY FINISH MATERIAL, W/ 4" MIN. EDGE DISTANCE.

O - 1/2"Ø HILTI HUS-H SCREW ANCHOR W/ 3" Min. EMBEDMENT INTO GROUT FILLED CONCRETE BLOCK BEYOND ANY FINISH MATERIAL, W/ 3 3/4" MIN. EDGE DISTANCE.

P - 1/2"Ø-13 TYPE "F" GRADE 5 BOLT TO 1/4" MIN. THK. ASTM A-36 STEEL W/ 1" MIN. EDGE DISTANCE OR 1/2"Ø -13 SAE GALVANIZED STEEL GRADE 5 HHB THRU BOLT W/ NUT & LOCK WASHER TO 1/4" MIN. THK. ASTM A-36 STEEL W/ 1" MIN. EDGE DISTANCE.

* SEE SHEET 10 FOR EFFECTIVE SPACING DEFINITION AT ISOMETRIC

FLORIDA BUILDING CODE (High Velocity Hurricane Zone)

HR-251 SSG CAPTURED CURTAIN WALL SYSTEM LARGE & SMALL MISSILE WITH INSULATING LAMINATED GLASS

Oldcastle BuildingEnvelope™
803 Airport Rd - Terrell, TX 75160
www.OldcastleBE.com - Phone 800-869-4567

M.C.V. DRAWN BY | 01/14/10 DATE | 10-014 DRAWING No | SHEET 15 OF 33

REV. No	DESCRIPTION	DATE
	GENERAL	01/04/11
	SCHEDULES FIXED	02/10/11

©2010 TILTECO, INC

TILTECO INC.
TILLIT TESTING & ENGINEERING COMPANY
6355 N.W. 36th St., Ste. 305, VIRGINIA GARDENS, FL 33166
Phone : (305)871-1530 . Fax : (305)871-1531
e-mail: tilteco@aol.com
EB-0006719
WALTER A. TILLIT Jr., P.E.
FLORIDA Lic. # 44167

WALTER A. TILLIT JR. LICENSE No. 44167 STATE OF FLORIDA PROFESSIONAL ENGINEER

P.E. DATE

PRODUCT REVISED as complying with the Florida Building Code
Acceptance No 10-0331.07
Expiration Date Feb 17, 2016
By [signature]
Miami Dade Product Control

MIAMI-DADE COUNTY

HEAD CONNECTION DETAILS (SIDE VIEWS)

SINGLE SPAN

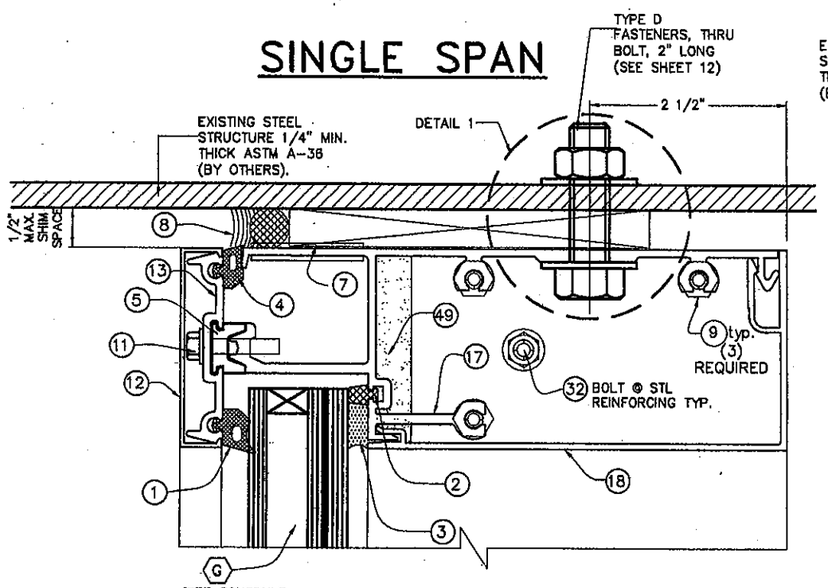

1 HEAD

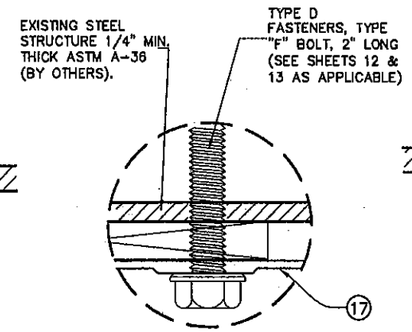

ALTERNATE FASTENER DETAIL 1

TWIN SPAN

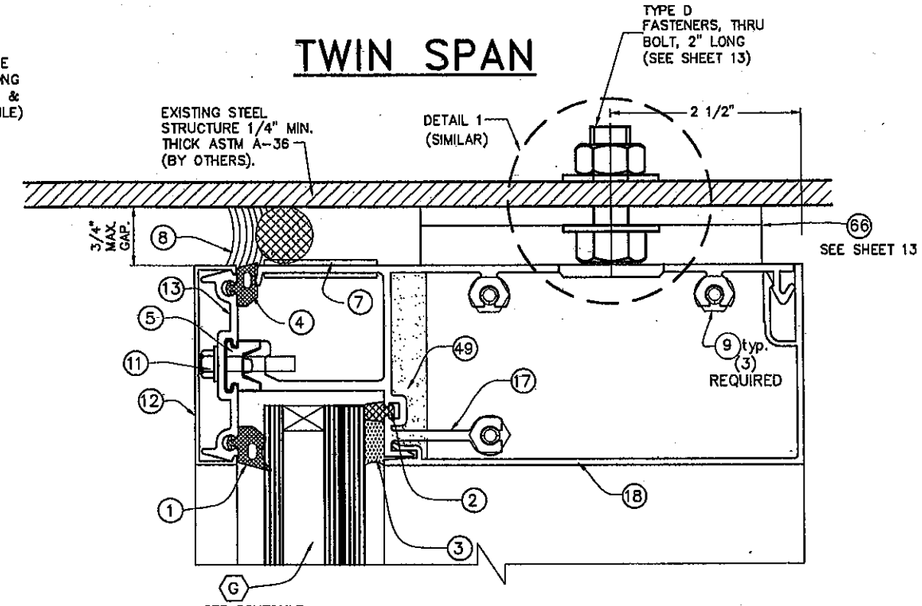

1B HEAD

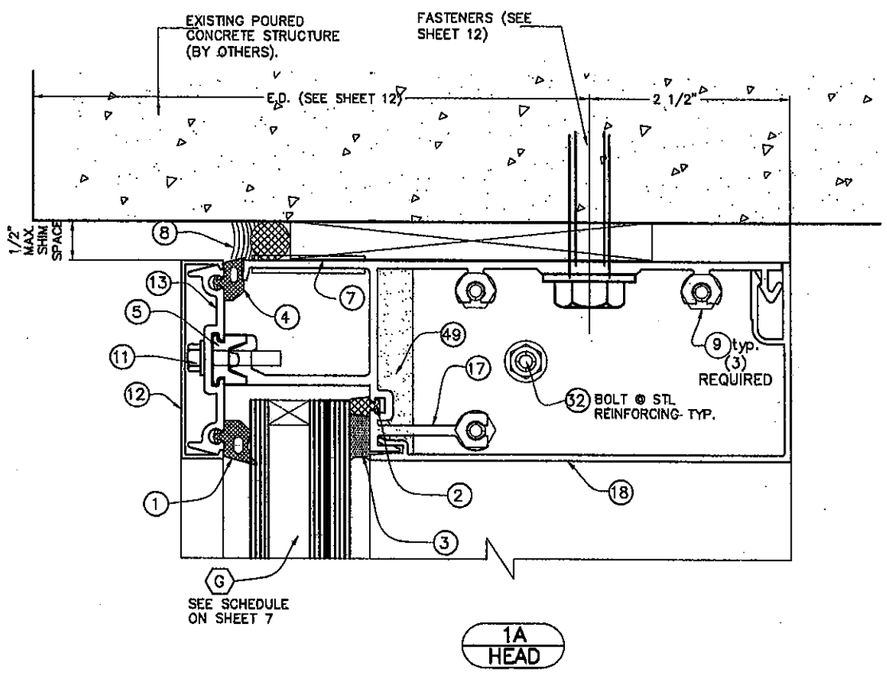

1A HEAD

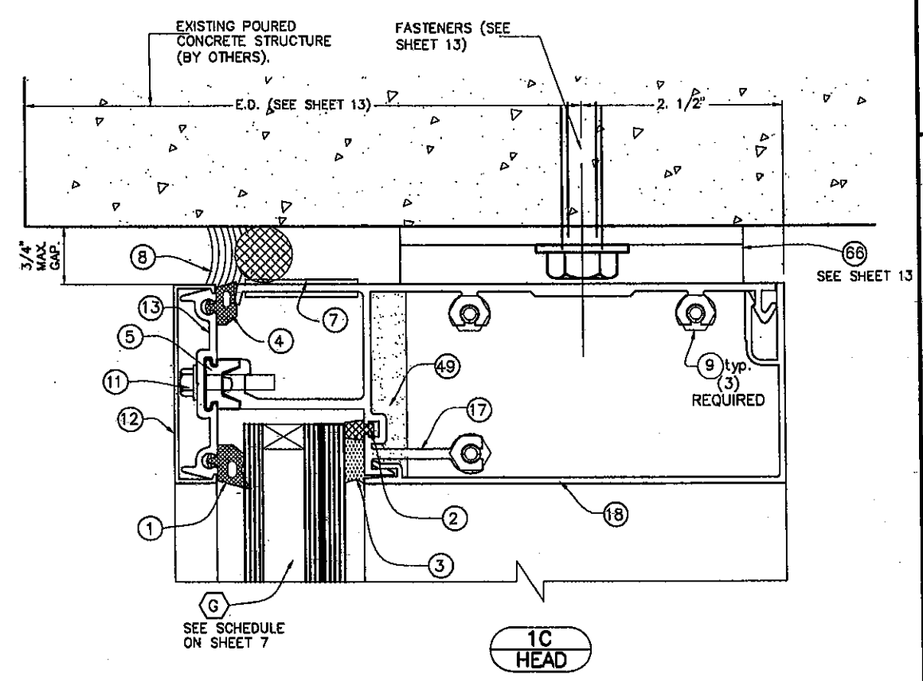

1C HEAD

NOTE: SEE ALSO DETAILS 1, 2 & 3, & 18 ON SHEETS 22 & 25 RESPECTIVELY

FLORIDA BUILDING CODE (High Velocity Hurricane Zone)

M.C.V. DRAWN BY | 01/14/10 DATE | 10-014 DRAWING No | SHEET 16 OF 33

HR-251 SSG CAPTURED CURTAIN WALL SYSTEM LARGE & SMALL MISSILE WITH INSULATING LAMINATED GLASS

Oldcastle BuildingEnvelope™
803 Airport Rd - Terrell, TX 75160
www.OldcastleBE.com - Phone 800-869-4567

REV. No	DESCRIPTION	DATE	REV. No	DESCRIPTION	DATE
1	GENERAL	01/04/11	-	-	-
-	-	-	-	-	-

©2010 TILTECO, INC

TILTECO INC.
TILLIT TESTING & ENGINEERING COMPANY
8355 N.W. 36th. St., Ste. 305, VIRGINIA GARDENS, FL 33166
Phone : (305)871-1530 , Fax : (305)871-1531
e-mail: tilteco@aol.com
EB-0006719
WALTER A. TILLIT Jr. P.E.
FLORIDA Lic. # 44167

WALTER A. TILLIT JR. LICENSE No. 44167 STATE OF FLORIDA PROFESSIONAL ENGINEER
P.E. SEAL AND SIGNATURE REQUIRED

PRODUCT REVISED as complying with the Florida Building Code
Acceptance No 10-0331.07
Expiration Date FEB 11 2016
By Manuel Perez
Miami Dade Product Control

MIAMI-DADE COUNTY

HORIZONTAL CONNECTION DETAILS (SIDE VIEWS)

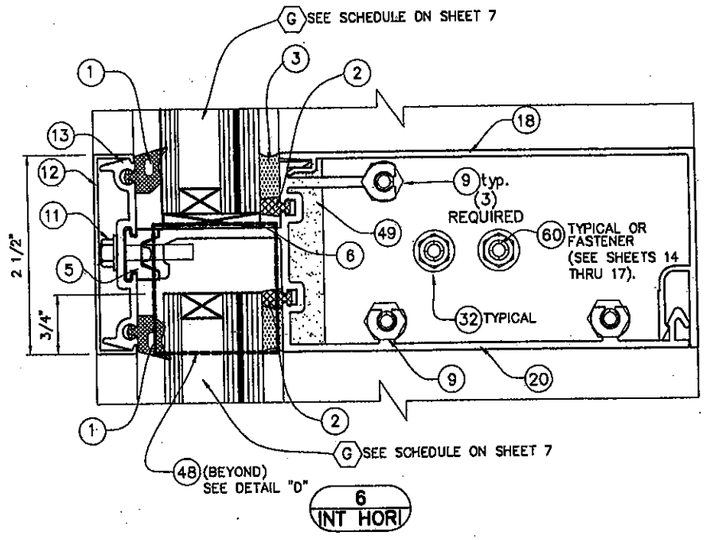

AT SINGLE OR TWIN SPAN

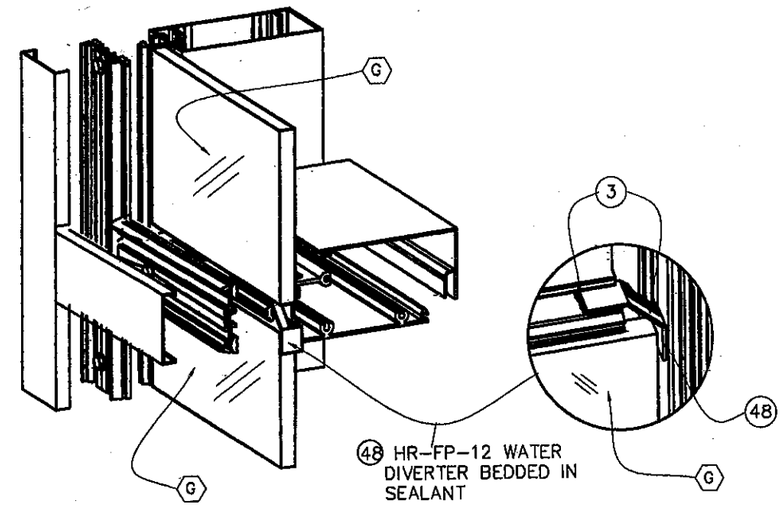

DETAIL "D"

SILL CONNECTION DETAILS (SIDE VIEWS)

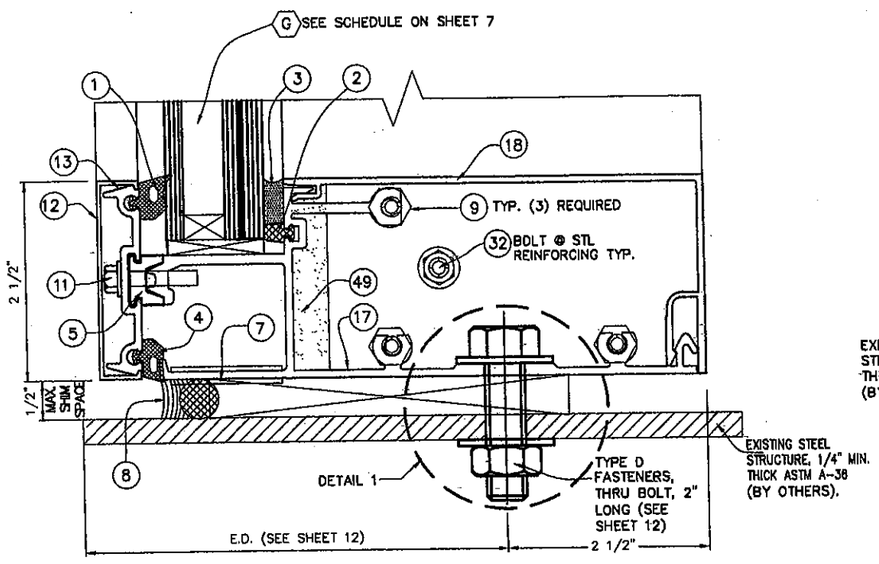

CONNECTION TO STEEL STRUCTURE

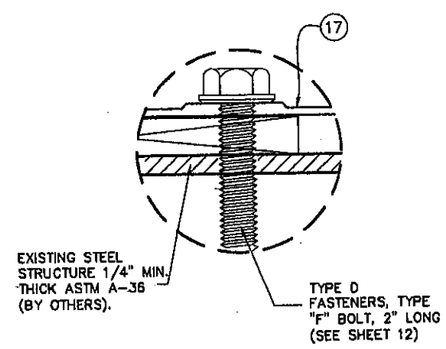

ALTERNATE FASTENER DETAIL 1

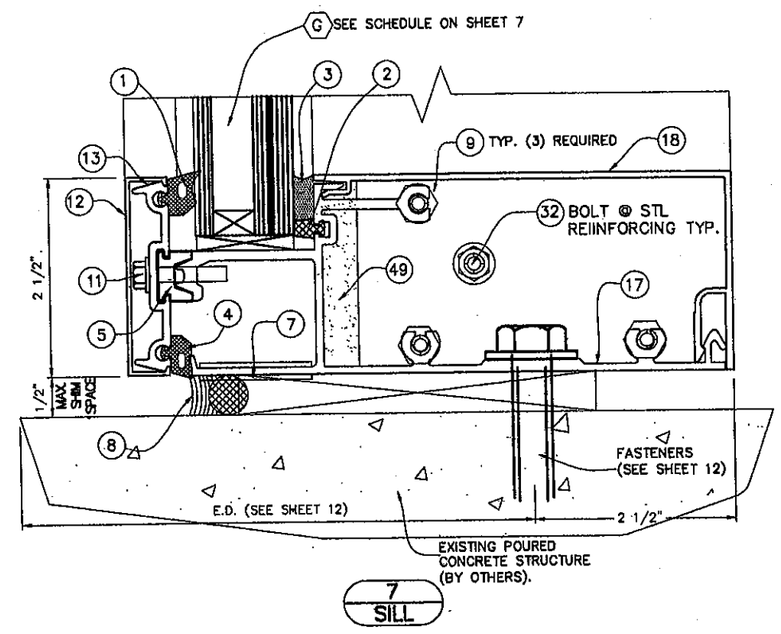

CONNECTION TO POURED CONCRETE STRUCTURE

FLORIDA BUILDING CODE (High Velocity Hurricane Zone)

©2010 TILTECO, INC

M.C.V. DRAWN BY

01/14/10 DATE

10-014 DRAWING No

SHEET 17 OF 33

HR-251 SSG CAPTURED CURTAIN WALL SYSTEM LARGE & SMALL MISSILE WITH INSULATING LAMINATED GLASS

Oldcastle BuildingEnvelope™
803 Airport Rd - Terrell, TX 75160
www.OldcastleBE.com - Phone 800-869-4567

REV. No	DESCRIPTION	DATE	REV. No	DESCRIPTION	DATE
1	GENERAL	01/04/11	-	-	-
-	-	-	-	-	-

TILTECO INC.
TILLIT TESTING & ENGINEERING COMPANY
6355 N.W. 36th. St. Ste. 305, Virginia GARDENS, FL 33166
Phone : (305)871-1530 . Fax : (305)871-1531
e-mail: tilteco@aol.com
EB-0006719
WALTER A. TILLIT Jr. P.E.
FLORIDA Lic. # 44167

WALTER A. TILLIT JR. LICENSE No. 44167 STATE OF FLORIDA PROFESSIONAL ENGINEER

SIGNATURE DATE

P.E. SEAL

PRODUCT REVISED as complying with the Florida Building Code
Acceptance No 10-0331.07
Expiration Date FEB 11, 2016
By Miami-Dade Product Control

MIAMI-DADE COUNTY

HORIZONTAL SECTION @ SSG MULLION DETAILS (PLAN)

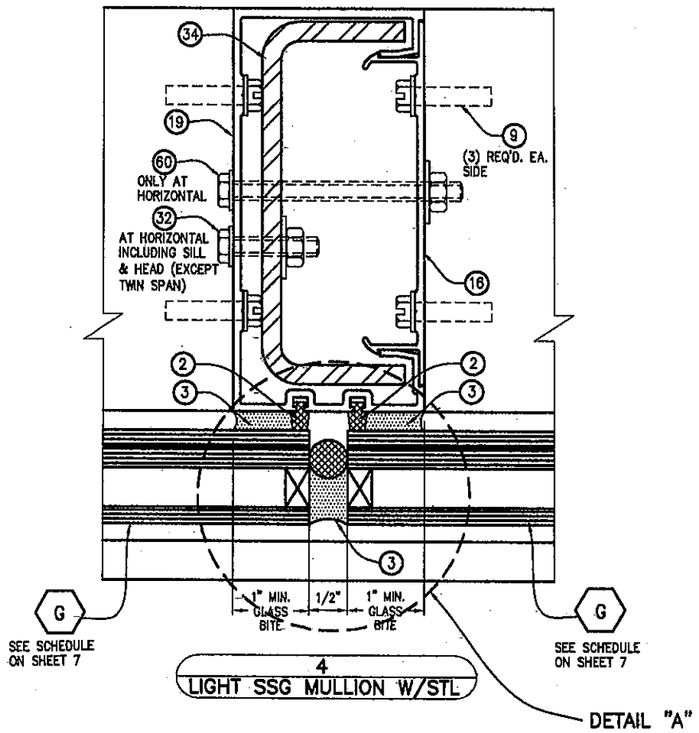

4
LIGHT SSG MULLION W/STL

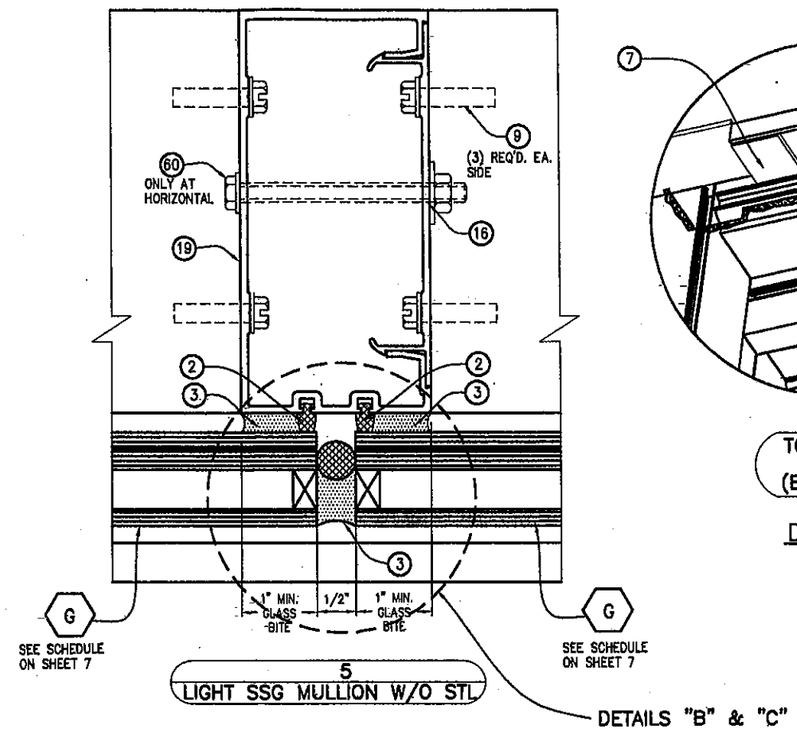

5
LIGHT SSG MULLION W/O STL

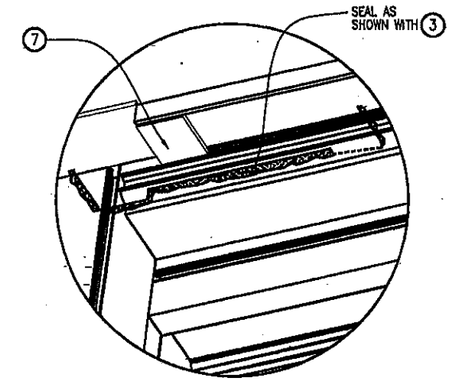

TOP MULLION END CAP (BOTTOM SIM.)

DETAIL "C"

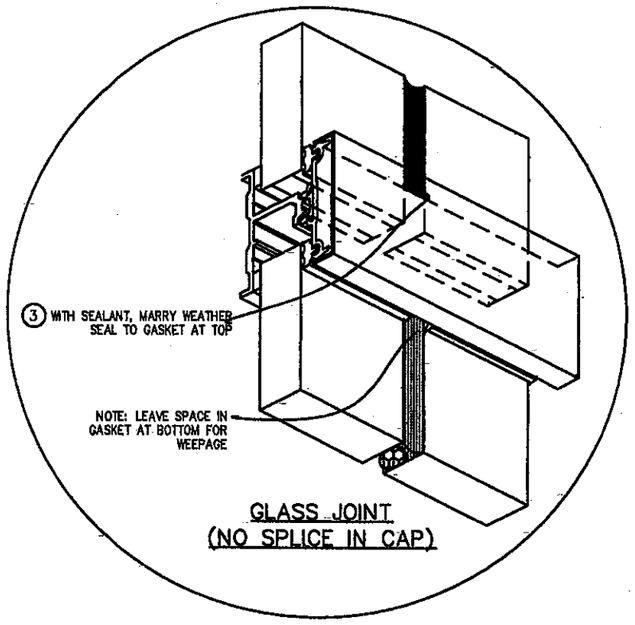

GLASS JOINT
(NO SPLICE IN CAP)

DETAIL "A"

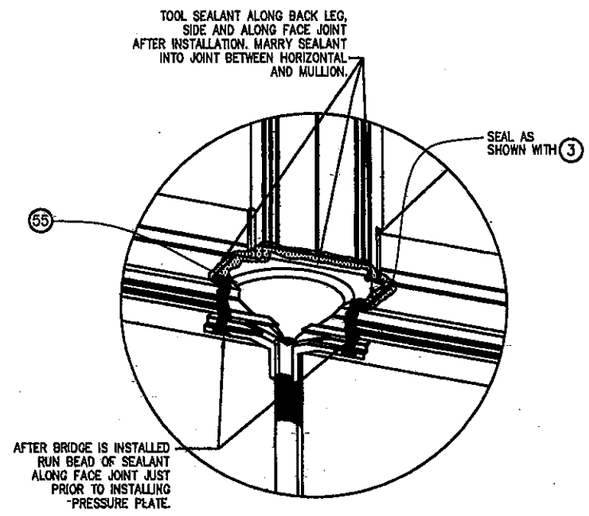

SSG BRIDGE INSTALLATION AT HORIZONTAL/VERTICAL INTERSECTION

DETAIL "B"

FLORIDA BUILDING CODE (High Velocity Hurricane Zone)

M.C.V. DRAWN BY

01/14/10 DATE

10-014 DRAWING No

SHEET 18 OF 33

HR-251 SSG CAPTURED CURTAIN WALL SYSTEM LARGE & SMALL MISSILE WITH INSULATING LAMINATED GLASS

Oldcastle BuildingEnvelope™
803 Airport Rd - Terrell, TX 75160
www.OldcastleBE.com - Phone 800-869-4567

REV. No	DESCRIPTION	DATE
1	GENERAL	01/04/11

REV. No	DESCRIPTION	DATE
-	-	-
-	-	-
-	-	-

©2010 TILTECO, INC

TILTECO INC.
TILLIT TESTING & ENGINEERING COMPANY
6355 N.W. 36th. St. Ste. 305, Miami, FLORIDA, FL 33166
Phone : (305)871-1330, Fax : (305)871-1331
e-mail: tilteco@aol.com
EB-0006719
WALTER A. TILLIT Jr. P.E.
FLORIDA Lic. # 44167

WALTER A. TILLIT JR. LICENSE No. 44167 STATE OF FLORIDA PROFESSIONAL ENGINEER

P.E. SEAL/SIGNATURE DATE

PRODUCT REVISED as complying with the Florida Building Code Acceptance No 10-0331.07
Expiration Date FEB.11.2016
By Miami-Dade Product Control

MIAMI-DADE COUNTY

* NOTE: INDICATED MAXIMUM AND MINIMUM VALUES FOR SPECIFIED SEALANT VERTICAL JOINT WIDTH AT JAMBS CONNECTED TO WALL HAVE BEEN DETERMINED ONLY TAKING INTO CONSIDERATION THE ACTUAL MOVEMENT OF GLASS WALL AT JAMBS DUE TO THERMAL, WIND AND ITS OWN CONSTRUCTION TOLERANCE, AND NOT PERFORMANCE FACTORS FROM THE SURROUNDING STRUCTURE.

JAMB CONNECTIONS AT HORIZONTALS (PLAN)

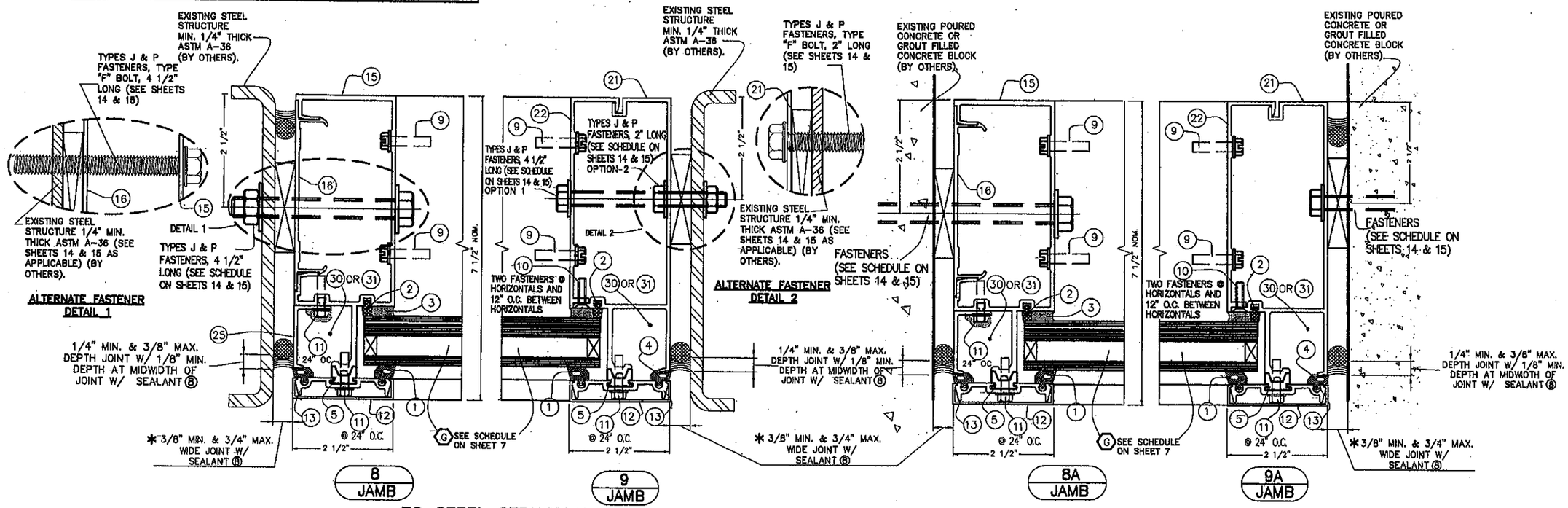

TO STEEL STRUCTURE

TO POURED CONCRETE OR GROUT FILLED CONCRETE BLOCK

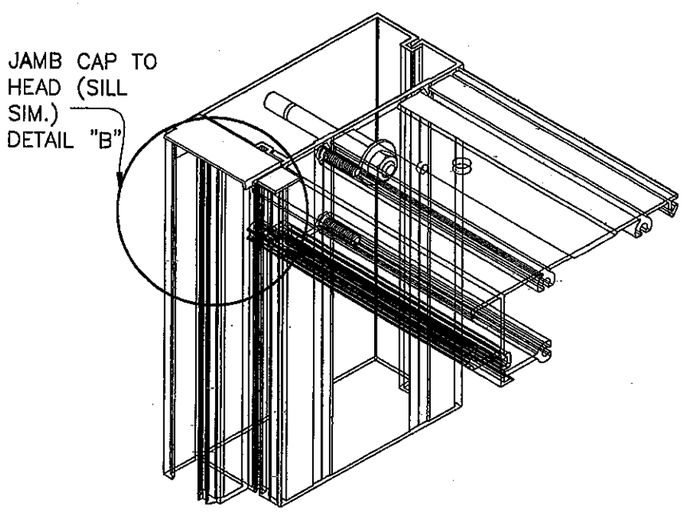

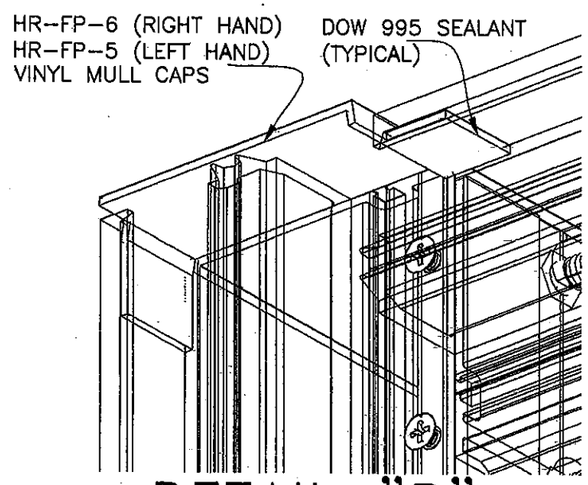

DETAIL "B"

LOOKING FOR BELOW

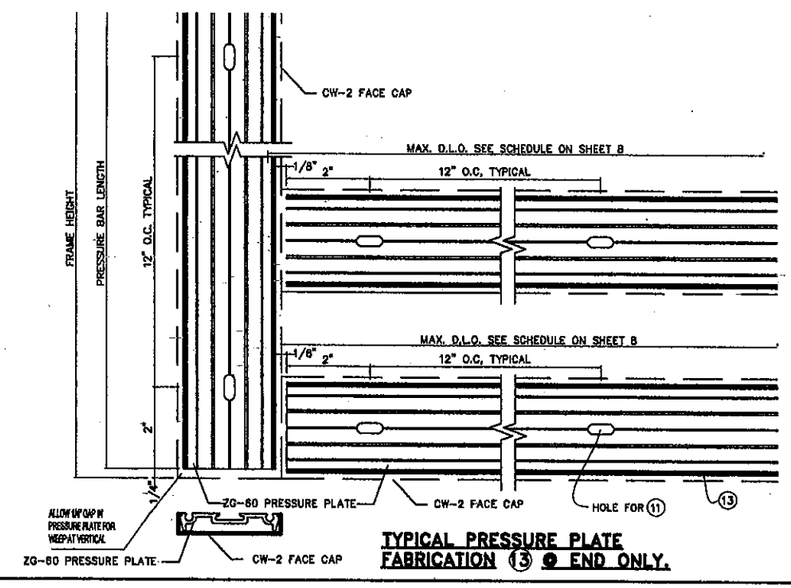

TYPICAL PRESSURE PLATE FABRICATION (13) @ END ONLY.

FLORIDA BUILDING CODE (High Velocity Hurricane Zone)

M.C.V. DRAWN BY

01/14/10 DATE

10-014 DRAWING No

SHEET 19 OF 33

HR-251 SSG CAPTURED CURTAIN WALL SYSTEM LARGE & SMALL MISSILE WITH INSULATING LAMINATED GLASS

Oldcastle BuildingEnvelope™
803 Airport Rd - Terrell, TX 75160
www.OldcastleBE.com - Phone 800-869-4567

REV. No.	DESCRIPTION	DATE
1	GENERAL	01/04/11

REV. No.	DESCRIPTION	DATE
-	-	-

©2010 TILTECO, INC

TILTECO INC.
TILLIT TESTING & ENGINEERING COMPANY
8355 N.W. 36th, St., Ste. 305, VIRGINIA GARDENS, FL 33166
Phone : (305)871-1530 , Fax : (305)871-1531
e-mail: tilteco@aol.com
EB-0006719
WALTER A. TILLIT Jr. P.E.
FLORIDA Lic. # 44167

WALTER A. TILLIT JR. LICENSE No. 44167 STATE OF FLORIDA PROFESSIONAL ENGINEER

P.E. SEAL/SIGNATURE/DATE

PRODUCT REVISED as complying with the Florida Building Code Acceptance No. ID-0331.07 Expiration Date FEB. 11, 2016
Miami-Dade Product Control

MIAMI-DADE COUNTY

CORNER MULLION DETAILS (PLAN)

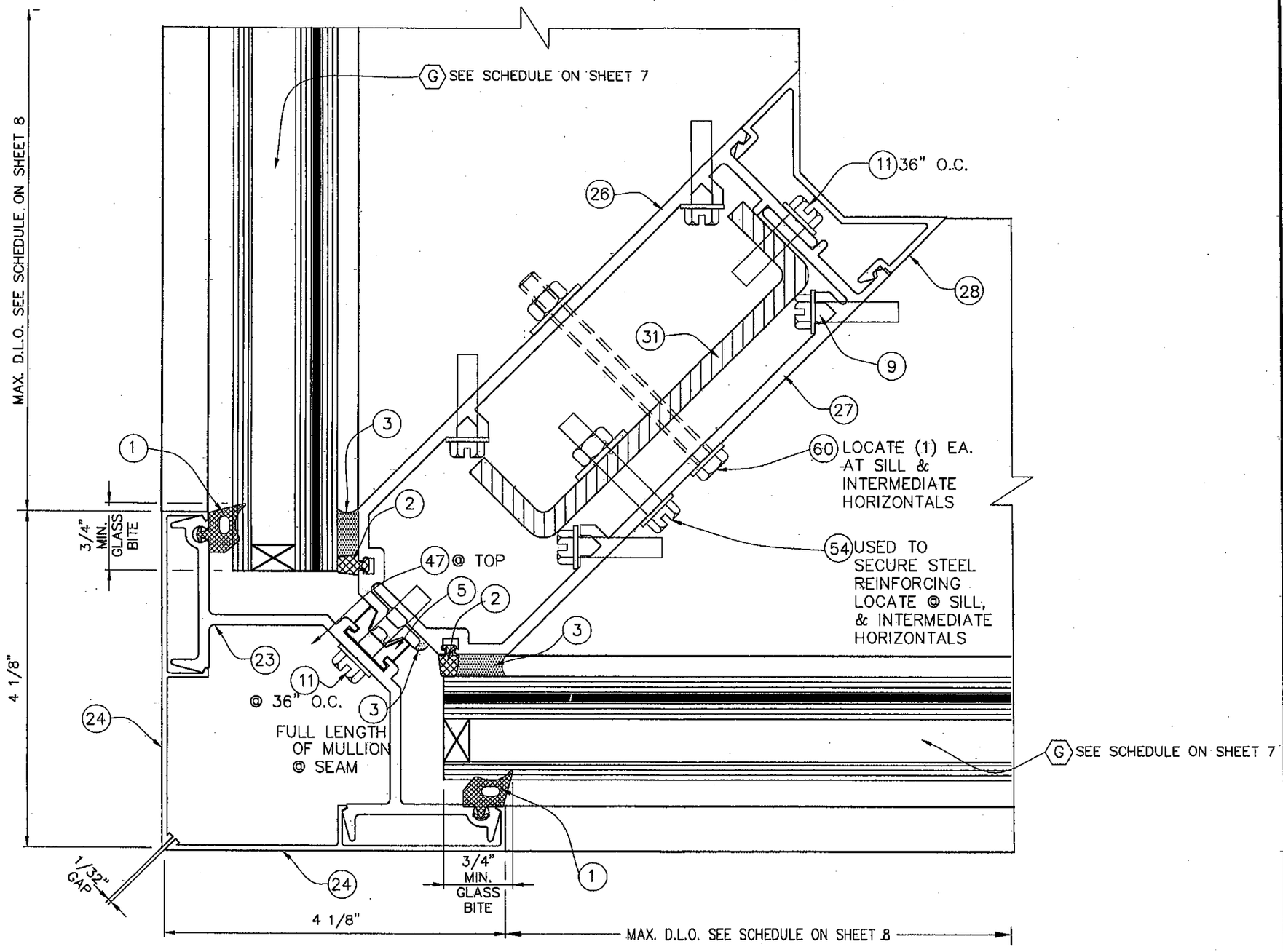

14
90 DEG CORNER CAPTURED PLAN

FLORIDA BUILDING CODE (High Velocity Hurricane Zone)

M.C.V. DRAWN BY

01/14/10 DATE

10-014 DRAWING No

SHEET 20 OF 33

HR-251 SSG CAPTURED CURTAIN WALL SYSTEM LARGE & SMALL MISSILE WITH INSULATING LAMINATED GLASS

Oldcastle BuildingEnvelope™
803 Airport Rd - Terrell, TX 75160
www.OldcastleBE.com - Phone 800-869-4567

REV. No	DESCRIPTION	DATE	REV. No	DESCRIPTION	DATE
1	GENERAL	01/04/11	-	-	-
-	-	-	-	-	-

©2010 TILTECO, INC

TILTECO INC.
TILLIT TESTING & ENGINEERING COMPANY
6355 N.W. 36th. St., Ste. 305, VIRGINIA GARDENS, FL 33166
Phone : (305)871-1530 , Fax : (305)871-1531
e-mail: tilteco@aol.com
EB-0006719
WALTER A. TILLIT Jr. P.E.
FLORIDA Lic. # 44167

WALTER A. TILLIT JR. LICENSE No. 44167 STATE OF FLORIDA PROFESSIONAL ENGINEER

P.E. SEAL & SIGNATURE DATE

PRODUCT REVISED
as complying with the Florida Building Code
Acceptance No 10-0331.07
Expiration Date FEB 17, 2016
By
Miami-Dade Product Control

MIAMI-DADE COUNTY

JAMBS CONNECTIONS AT INSIDE CORNER (PLAN)

ALTERNATE FASTENER

DETAIL 1

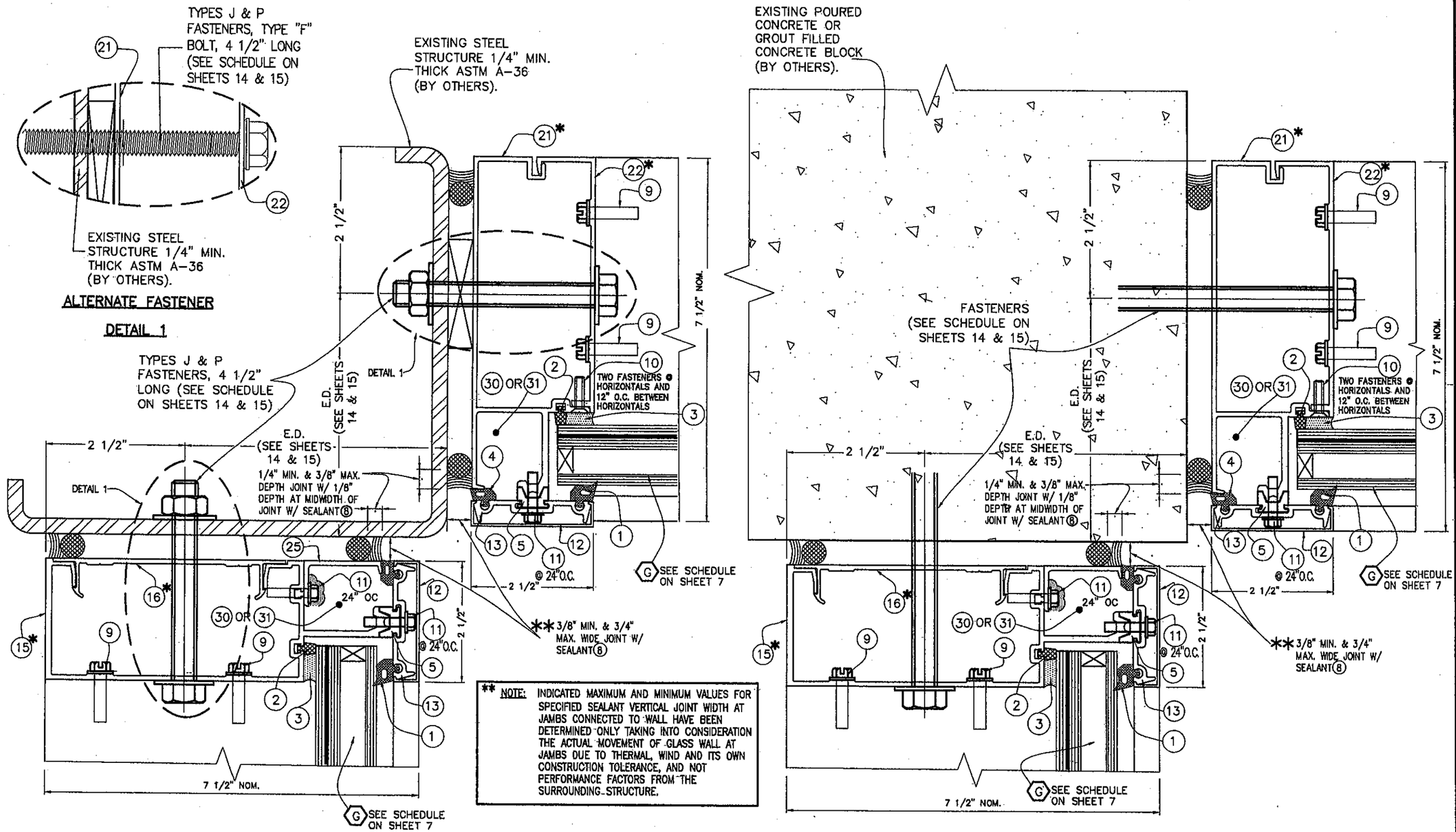

** NOTE: INDICATED MAXIMUM AND MINIMUM VALUES FOR SPECIFIED SEALANT VERTICAL JOINT WIDTH AT JAMBS CONNECTED TO WALL HAVE BEEN DETERMINED ONLY TAKING INTO CONSIDERATION THE ACTUAL MOVEMENT OF GLASS WALL AT JAMBS DUE TO THERMAL, WIND AND ITS OWN CONSTRUCTION TOLERANCE, AND NOT PERFORMANCE FACTORS FROM THE SURROUNDING STRUCTURE.

8, 9 @ INSIDE CORNER
JAMB TO EXISTING STEEL (PLAN)

8A, 9A @ INSIDE CORNER
JAMB TO POURED CONCRETE (PLAN)

* JAMBS MAY BE 15 + 16 OR 21 + 22 INTERCHANGEABLE

FLORIDA BUILDING CODE (High Velocity Hurricane Zone)

HR-251 SSG CAPTURED CURTAIN WALL SYSTEM LARGE & SMALL MISSILE WITH INSULATING LAMINATED GLASS

Oldcastle BuildingEnvelope™
803 Airport Rd - Terrell, TX 75160
www.OldcastleBE.com - Phone 800-869-4567

REV. No	DESCRIPTION	DATE	REV. No	DESCRIPTION	DATE
1	GENERAL	01/04/11	-	-	-
-	-	-	-	-	-

M.C.V. DRAWN BY

01/14/10 DATE

10-014 DRAWING No

SHEET 21 OF 33

FLORIDA BUILDING CODE (High Velocity Hurricane Zone)

©2010 TILTECO, INC

TILTECO INC.
TILLIT TESTING & ENGINEERING COMPANY
6355 N.W. 36th. St., Ste. 305, VIRGINIA GARDENS, FL 33166
Phone : (305)871-1530 , Fax : (305)871-1531
e-mail: tilteco@aol.com
EB-0006719
WALTER A. TILLIT Jr. P.E.
FLORIDA Lic. # 44167

WALTER A. TILLIT JR. LICENSE No. 44167 STATE OF FLORIDA PROFESSIONAL ENGINEER

P.E. SEAL AND SIGNATURE REQUIRED

PRODUCT REVISED as complying with the Florida Building Code
Acceptance No 10-0331.07
Expiration Date FEB 11 2016
By
Miami-Dade Product Control

MIAMI-DADE COUNTY

SILL & HEAD CONNECTION DETAILS FOR SINGLE SPAN & SILL CONNECTION DETAIL FOR TWIN SPAN (PLANS)

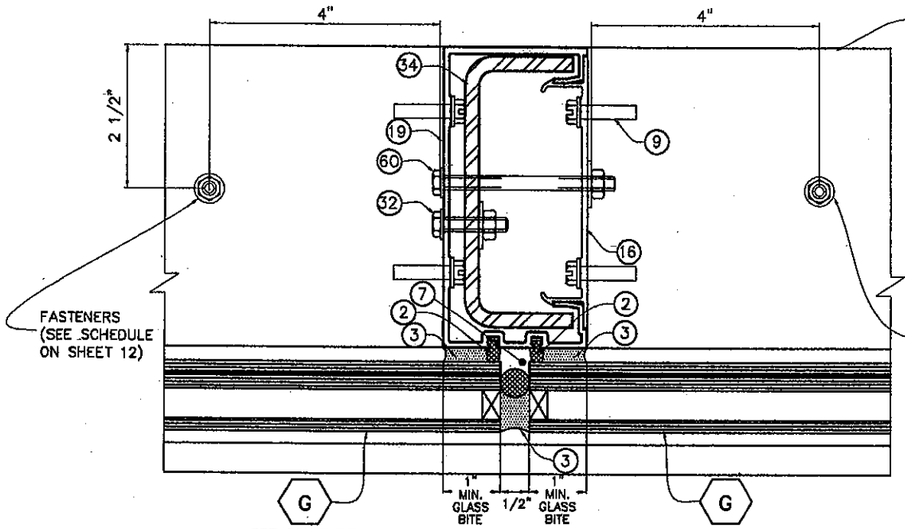

INTERIOR MULLION W/ INSERT

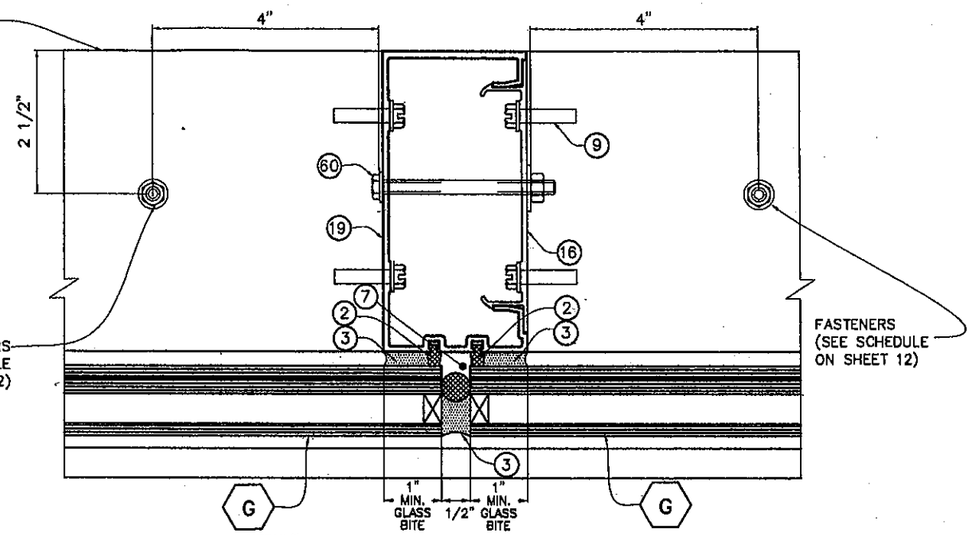

INTERIOR MULLION W/O INSERT

1

CONNECTION AT INTERIOR MULLION

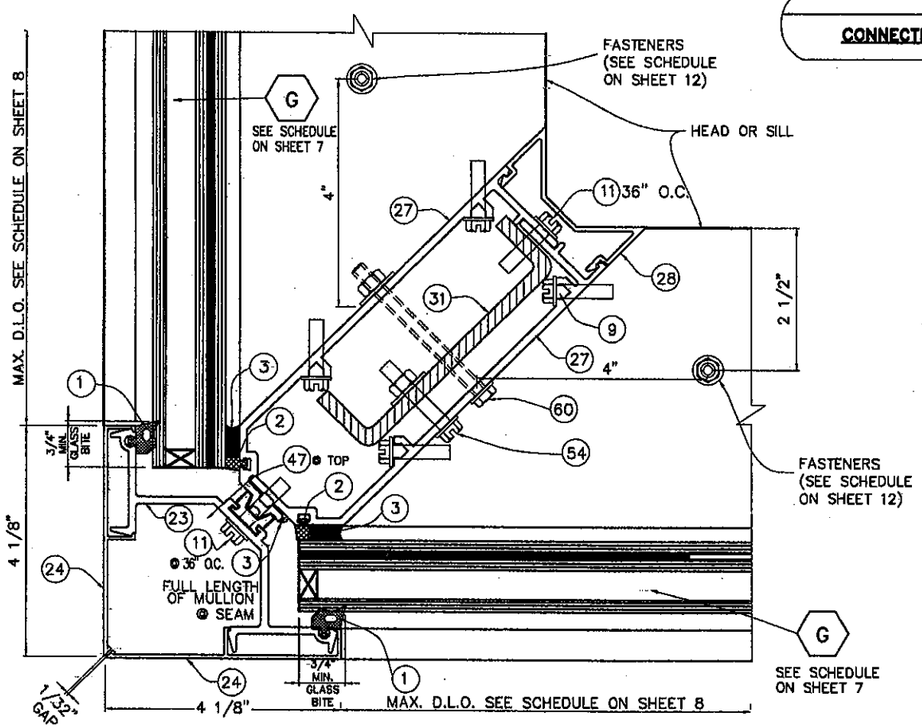

2

CONNECTION AT CORNER MULLION

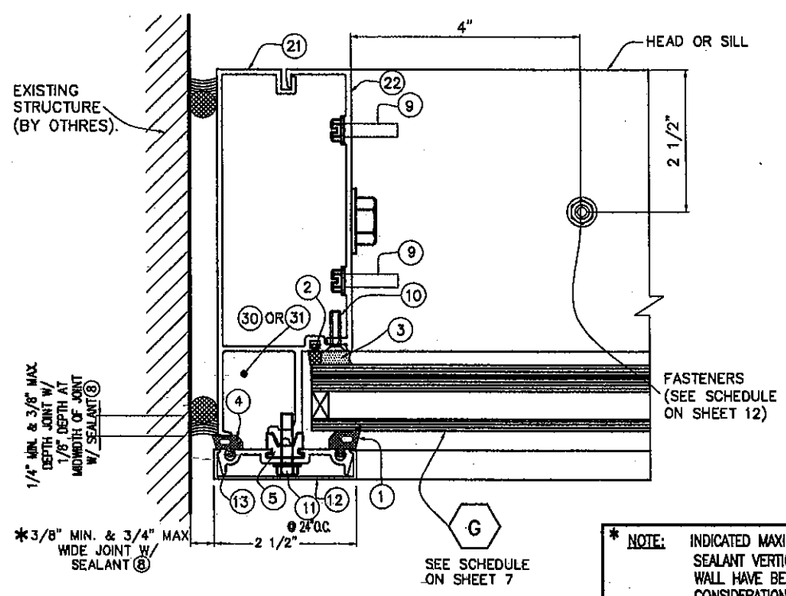

3

CONNECTION AT JAMBS

* NOTE: INDICATED MAXIMUM AND MINIMUM VALUES FOR SPECIFIED SEALANT VERTICAL JOINT WIDTH AT JAMBS CONNECTED TO WALL HAVE BEEN DETERMINED ONLY TAKING INTO CONSIDERATION THE ACTUAL MOVEMENT OF GLASS WALL AT JAMBS DUE TO THERMAL, WIND AND ITS OWN CONSTRUCTION TOLERANCE, AND NOT PERFORMANCE FACTORS FROM THE SURROUNDING STRUCTURE.

FLORIDA BUILDING CODE (High Velocity Hurricane Zone)

M.C.V. DRAWN BY

01/14/10 DATE

10-014 DRAWING No

SHEET 22 OF 33

HR-251 SSG CAPTURED CURTAIN WALL SYSTEM LARGE & SMALL MISSILE WITH INSULATING LAMINATED GLASS

Oldcastle BuildingEnvelope™
803 Airport Rd - Terrell, TX 75160
www.OldcastleBE.com - Phone 800-869-4567

REV. No	DESCRIPTION	DATE	REV. No	DESCRIPTION	DATE
1	GENERAL	01/04/11	-	-	-
-	-	-	-	-	-

©2010 TILTECO, INC

TILTECO, INC.
TILLIT TESTING & ENGINEERING COMPANY
6355 N.W. 36th. St., Ste. 305, VIRGINIA GARDENS, FL 33166
Phone : (305)871-1530 , Fax : (305)871-1531
e-mail: tilteco@aol.com
EB-0006719
WALTER A. TILLIT Jr. P.E.
FLORIDA Lic. # 44167

WALTER A. TILLIT JR. LICENSE No. 44167 STATE OF FLORIDA PROFESSIONAL ENGINEER

BY: DATE

P.E. SIGNATURE

PRODUCT REVISED as complying with the Florida Building Code
Acceptance No 10-0331.07
Expiration Date Feb. 11, 2016
By Miami Dade Product Control

MIAMI-DADE COUNTY

OPTION #1 FOR HEAD CONNECTION OF TWIN SPAN SSG MULLIONS

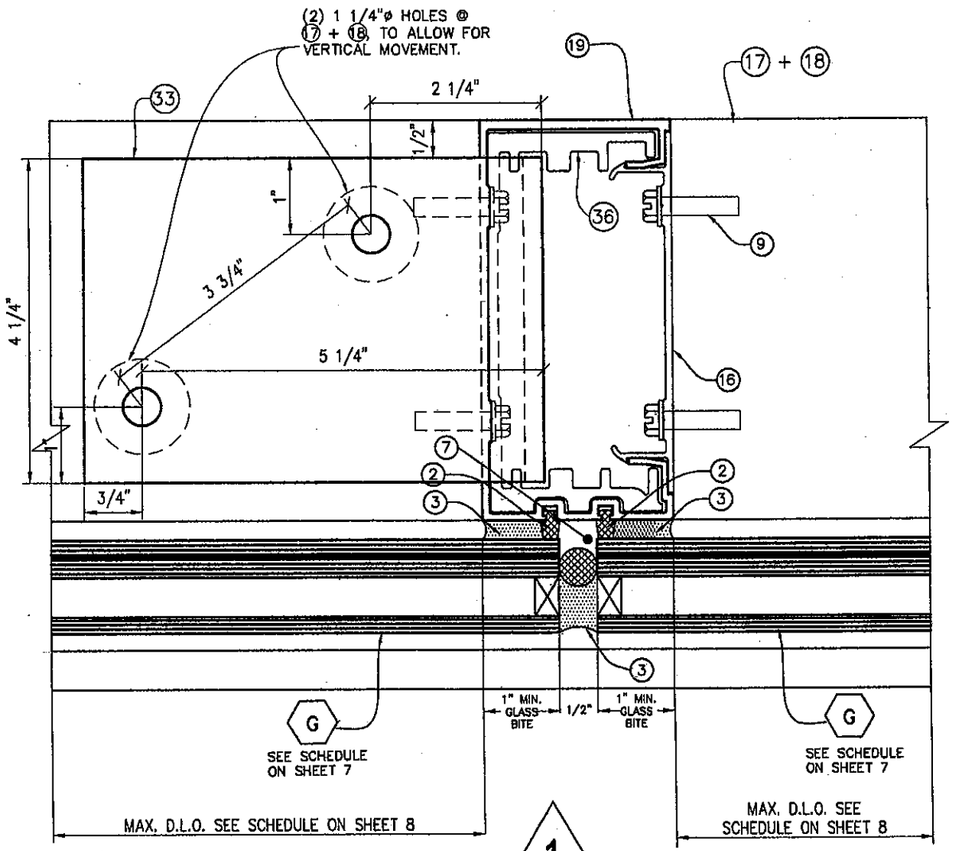

1

17
HEAD ANCHOR (PLAN)

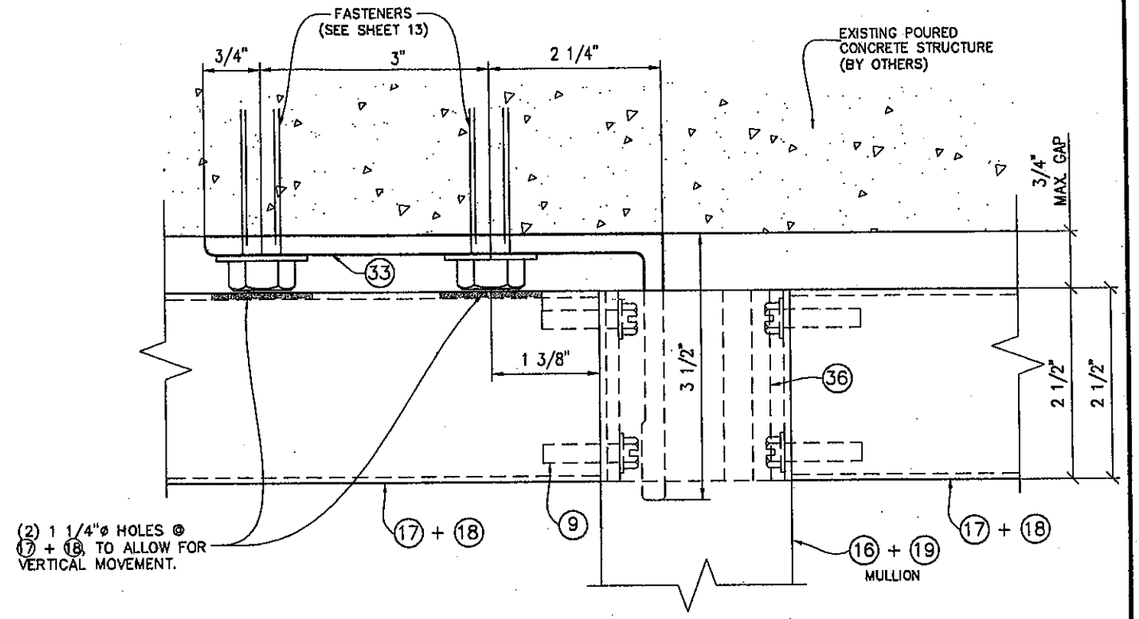

TO EXISTING POURED CONCRETE STRUCTURE

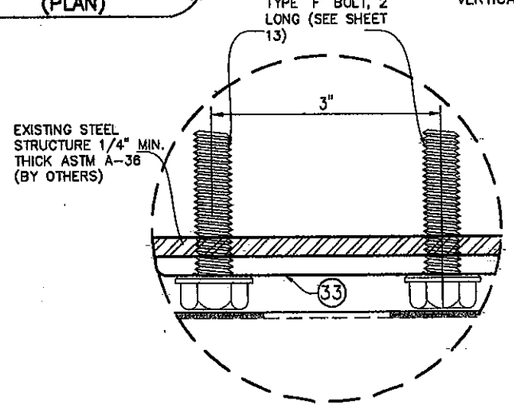

ALTERNATE FASTENER
DETAIL 1

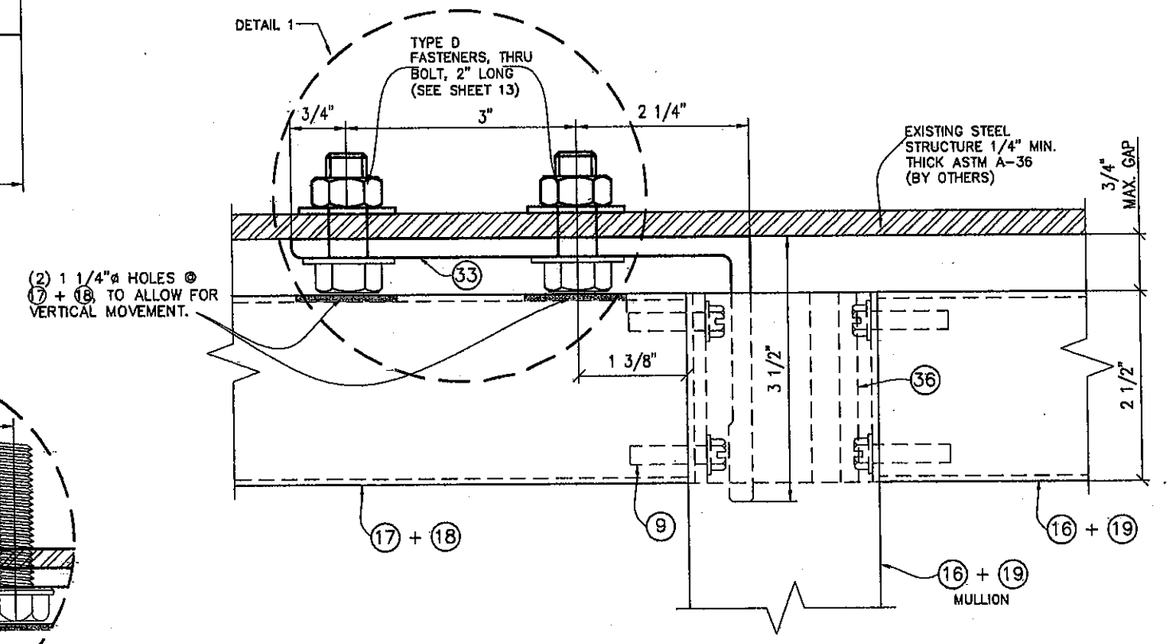

TO EXISTING STEEL STRUCTURE

EXTERIOR ELEVATIONS

1

FLORIDA BUILDING CODE (High Velocity Hurricane Zone)

©2010 TILTECO, INC

M.C.V. DRAWN BY
01/14/10 DATE
10-014 DRAWING No
SHEET 23 OF 33

HR-251 SSG CAPTURED CURTAIN WALL SYSTEM LARGE & SMALL MISSILE WITH INSULATING LAMINATED GLASS

Oldcastle BuildingEnvelope™
803 Airport Rd - Terrell, TX 75160
www.OldcastleBE.com - Phone 800-869-4567

REV. No.	DESCRIPTION	DATE
1	GENERAL	01/04/11

REV. No.	DESCRIPTION	DATE
-	-	-

TILTECO INC.
TILLIT TESTING & ENGINEERING COMPANY
6355 N.W. 36th. St., Ste. 305, VIRGINIA GARDENS, FL 33166
Phone : (305)871-1530 , Fax : (305)871-1531
e-mail: tilteco@aol.com
EB-0006719
WALTER A. TILLIT Jr. P.E.
FLORIDA Lic. # 44167

WALTER A. TILLIT JR. LICENSE No. 44167 STATE OF FLORIDA PROFESSIONAL ENGINEER
SEAL
DATE
P.E.

PRODUCT REVISED as complying with the Florida Building Code
Acceptance No 10-0331.07
Expiration Date FEB.17.2016
By Miami-Dade Product Control

MIAMI-DADE COUNTY

OPTION #2 FOR HEAD CONNECTION OF TWIN SPAN SSG MULLIONS

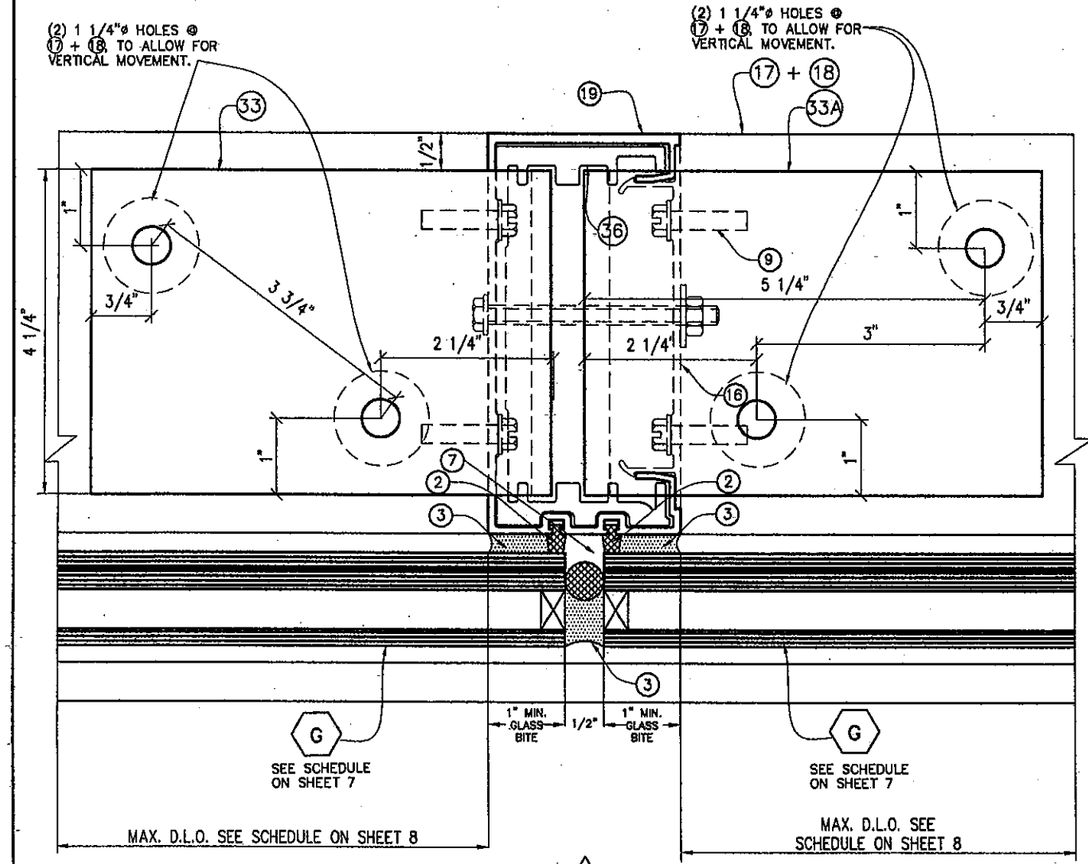

1

17A
HEAD ANCHOR (PLAN)

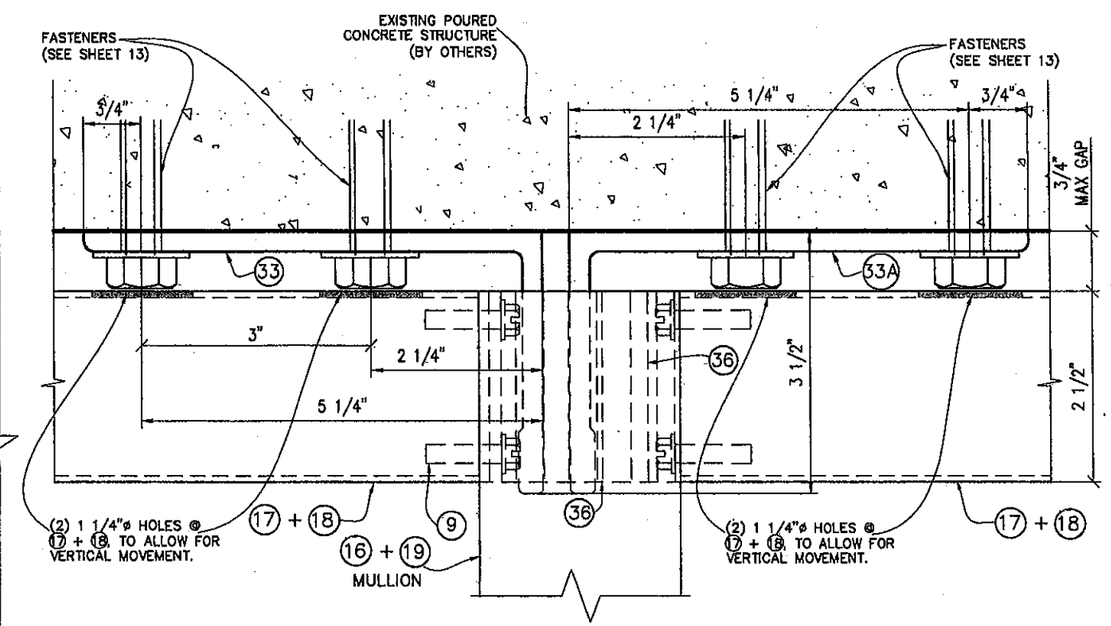

TO EXISTING POURED CONCRETE STRUCTURE

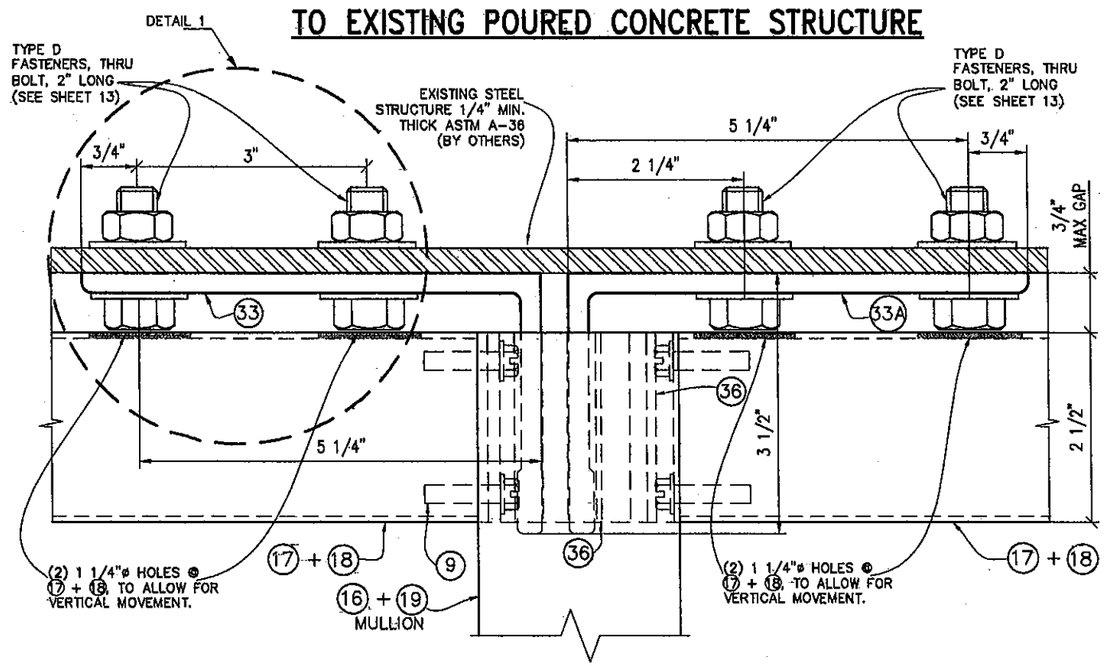

TO EXISTING STEEL STRUCTURE

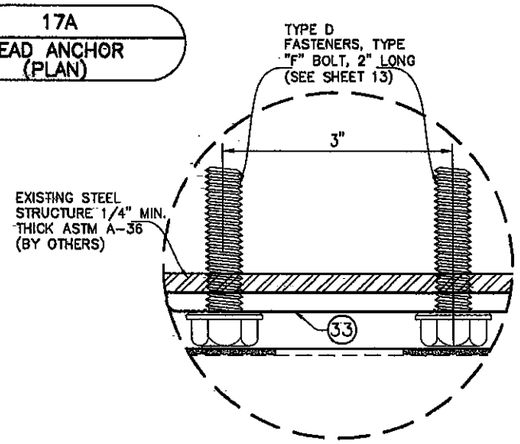

ALTERNATE FASTENER
DETAIL 1

EXTERIOR ELEVATIONS 1

FLORIDA BUILDING CODE (High Velocity Hurricane Zone)

M.C.V. DRAWN BY | 01/14/10 DATE | 10-014 DRAWING No | SHEET 24 OF 33

HR-251 SSG CAPTURED CURTAIN WALL SYSTEM LARGE & SMALL MISSILE WITH INSULATING LAMINATED GLASS

Oldcastle BuildingEnvelope™
803 Airport Rd - Terrell, TX 75160
www.OldcastleBE.com - Phone 800-869-4567

REV. No	DESCRIPTION	DATE	REV. No	DESCRIPTION	DATE
1	GENERAL	07/04/11	-	-	-
-	-	-	-	-	-

©2010 TILTECO, INC

TILTECO INC.
TILLIT TESTING & ENGINEERING COMPANY
6355 N.W. 36th. St., Ste. 305, VIRGINIA GARDENS, FL 33166
Phone : (305)871-1530 , Fax : (305)871-1531
e-mail: tilteco@aol.com
EB-0006719
WALTER A. TILLIT Jr., P.E.
FLORIDA Lic. # 44167

WALTER A. TILLIT JR. LICENSE No 44167 STATE OF FLORIDA PROFESSIONAL ENGINEER
SIGNATURE DATE
P.E.

PRODUCT REVISED as complying with the Florida Building Code
Acceptance No 10-0331.07
Expiration Date FEB 17 2016
By Miami Dade Product Control

MIAMI-DADE COUNTY

HEAD CONNECTION OF TWIN SPAN JAMBS

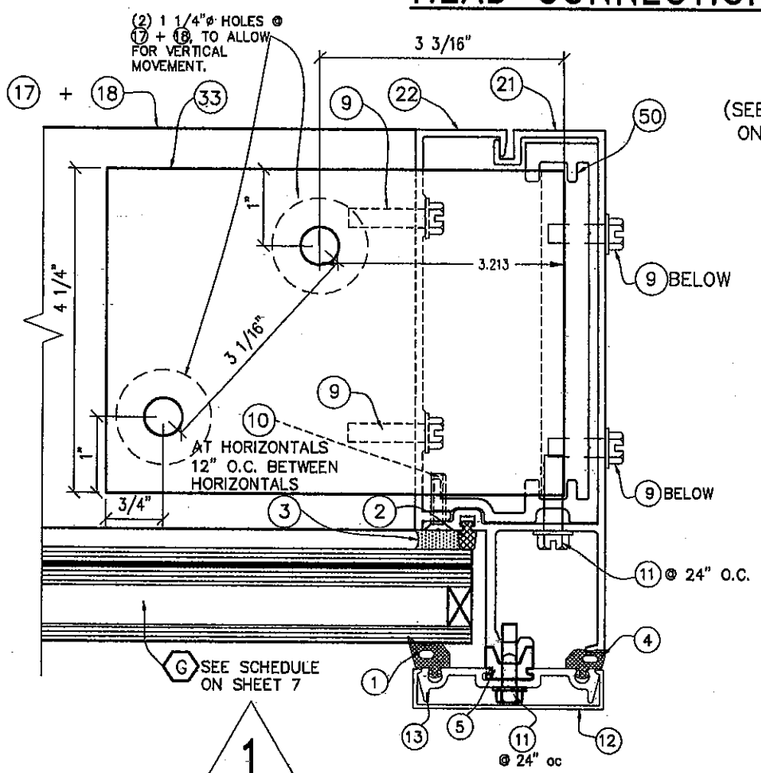

1

18
JAMB HEAD ANCHOR PLAN

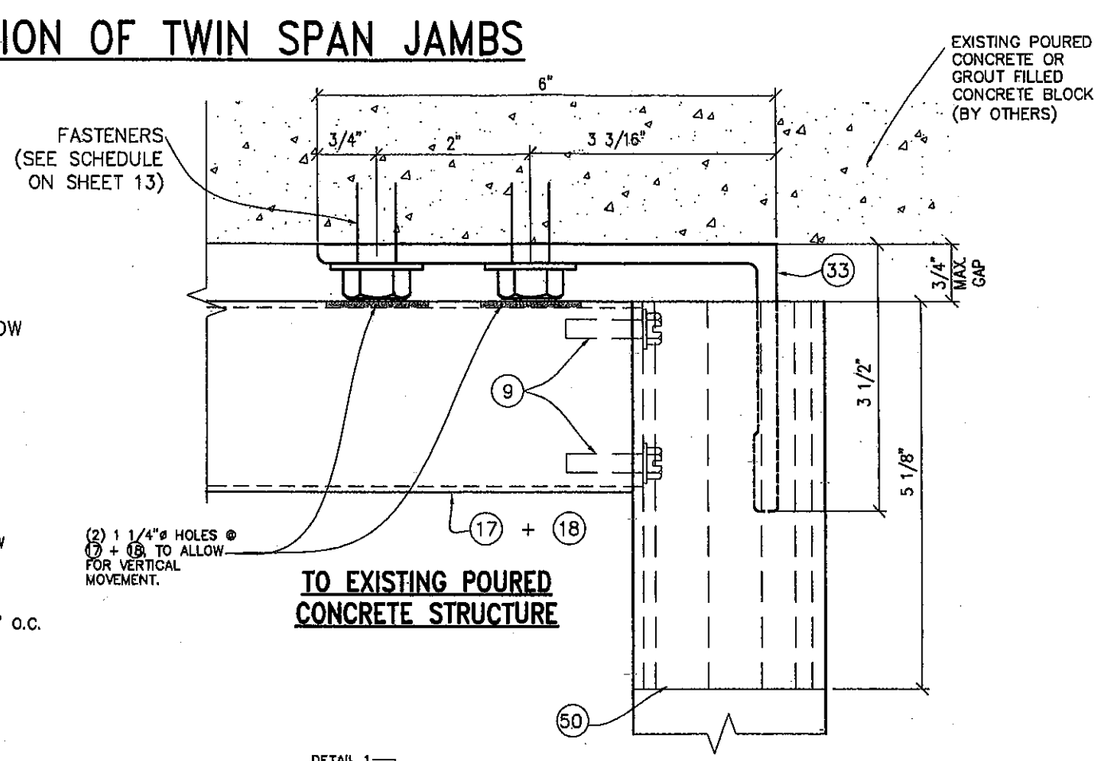

TO EXISTING POURED CONCRETE STRUCTURE

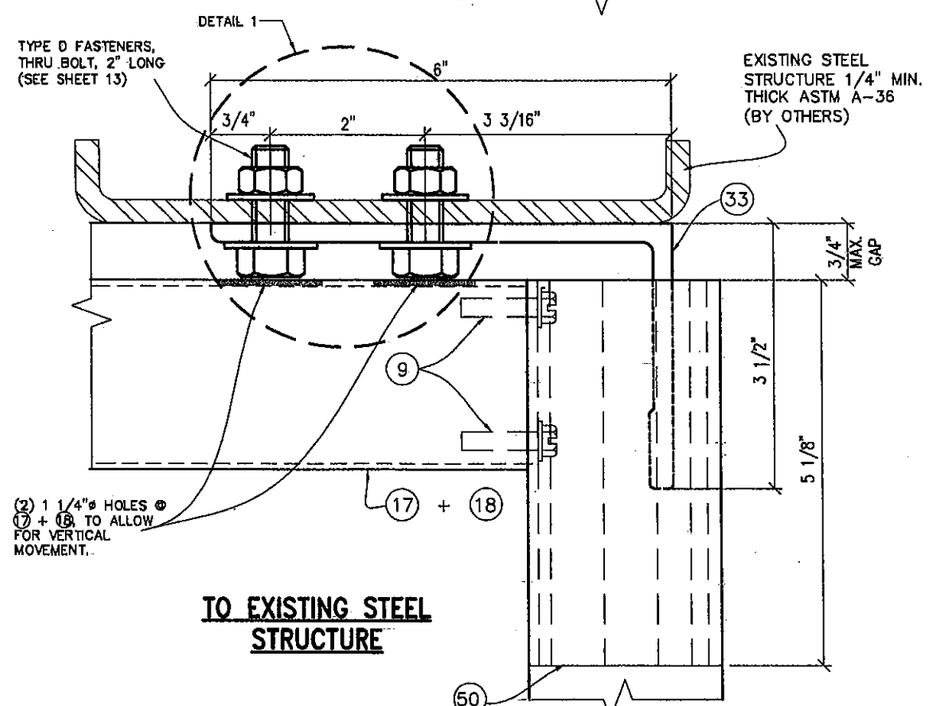

TO EXISTING STEEL STRUCTURE

EXTERIOR ELEVATIONS 1

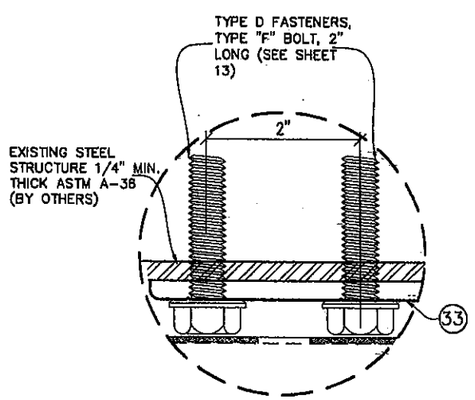

ALTERNATE FASTENER DETAIL 1

FLORIDA BUILDING CODE (High Velocity Hurricane Zone)

©2010 TILTECO, INC

TILTECO INC.
TILLIT TESTING & ENGINEERING COMPANY
6355 N.W. 36th. St., Ste. 305, VIRGINIA GARDENS, FL 33166
Phone : (305)871-1530 . Fax : (305)871-1531
e-mail: tilteco@aol.com
EB-0006719
WALTER A. TILLIT Jr. P.E.
FLORIDA Lic. # 44167

M.C.V.
DRAWN BY

01/14/10
DATE

10-014
DRAWING No

SHEET 25 OF 33

HR-251 SSG CAPTURED CURTAIN WALL SYSTEM LARGE & SMALL MISSILE WITH INSULATING LAMINATED GLASS

Oldcastle BuildingEnvelope™
803 Airport Rd - Terrell, TX 75160
www.OldcastleBE.com - Phone 800-869-4567

REV. No	DESCRIPTION	DATE	REV. No	DESCRIPTION	DATE
1	GENERAL	01/04/11	-	-	-
-	-	-	-	-	-

WALTER A. TILLIT JR. LICENSE No 44167 STATE OF FLORIDA PROFESSIONAL ENGINEER

P.E. SIGNATURE/DATE

PRODUCT REVISED as complying with the Florida Building Code
Acceptance No 10-0331.07
Expiration Date FEB 11 2016
By Miami-Dade Product Control

MIAMI-DADE COUNTY

HEAD CONNECTION DETAIL FOR TWIN SPAN CORNER MULLION

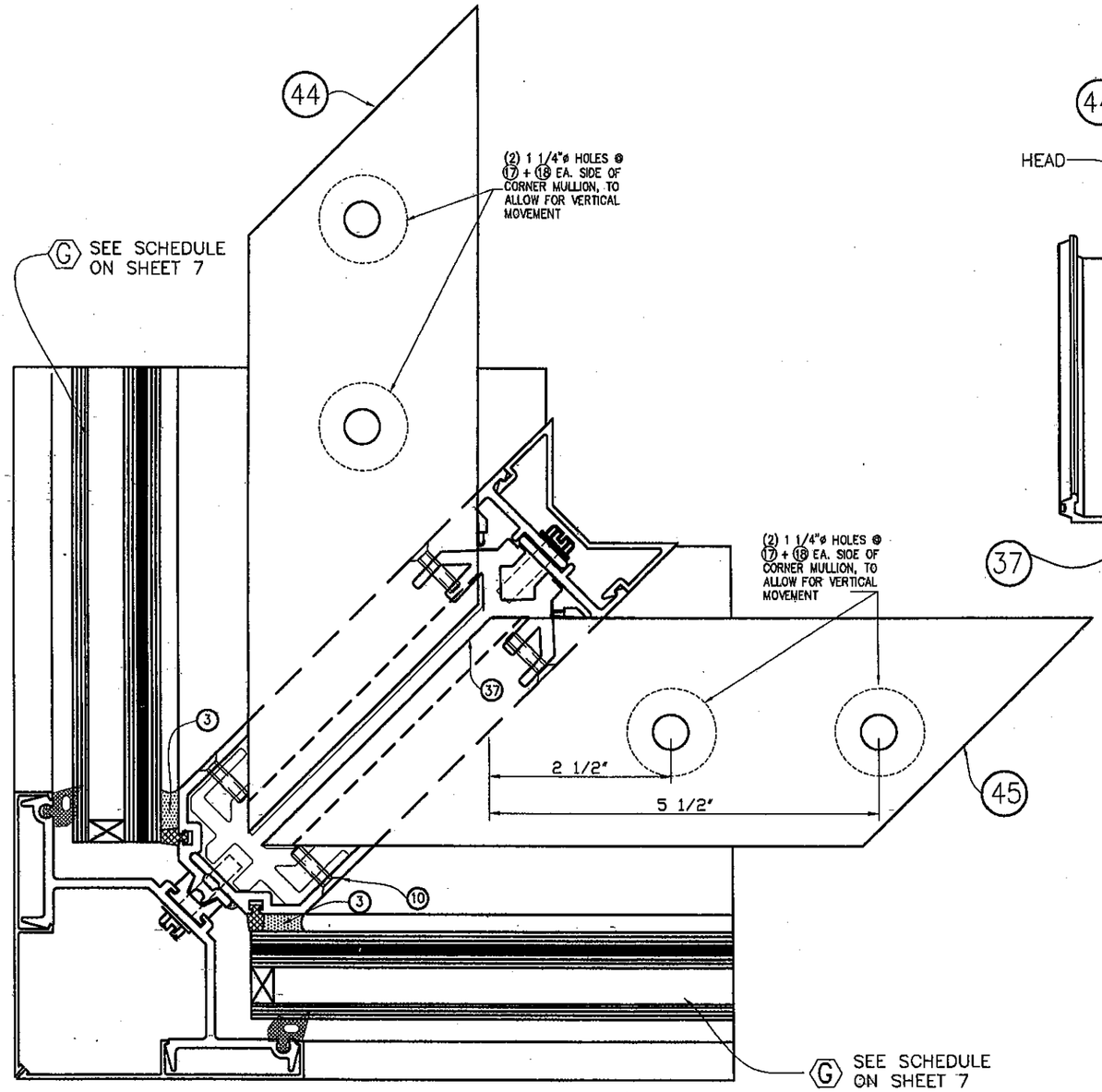

19
CORNER HEAD ANCHOR (PLAN)

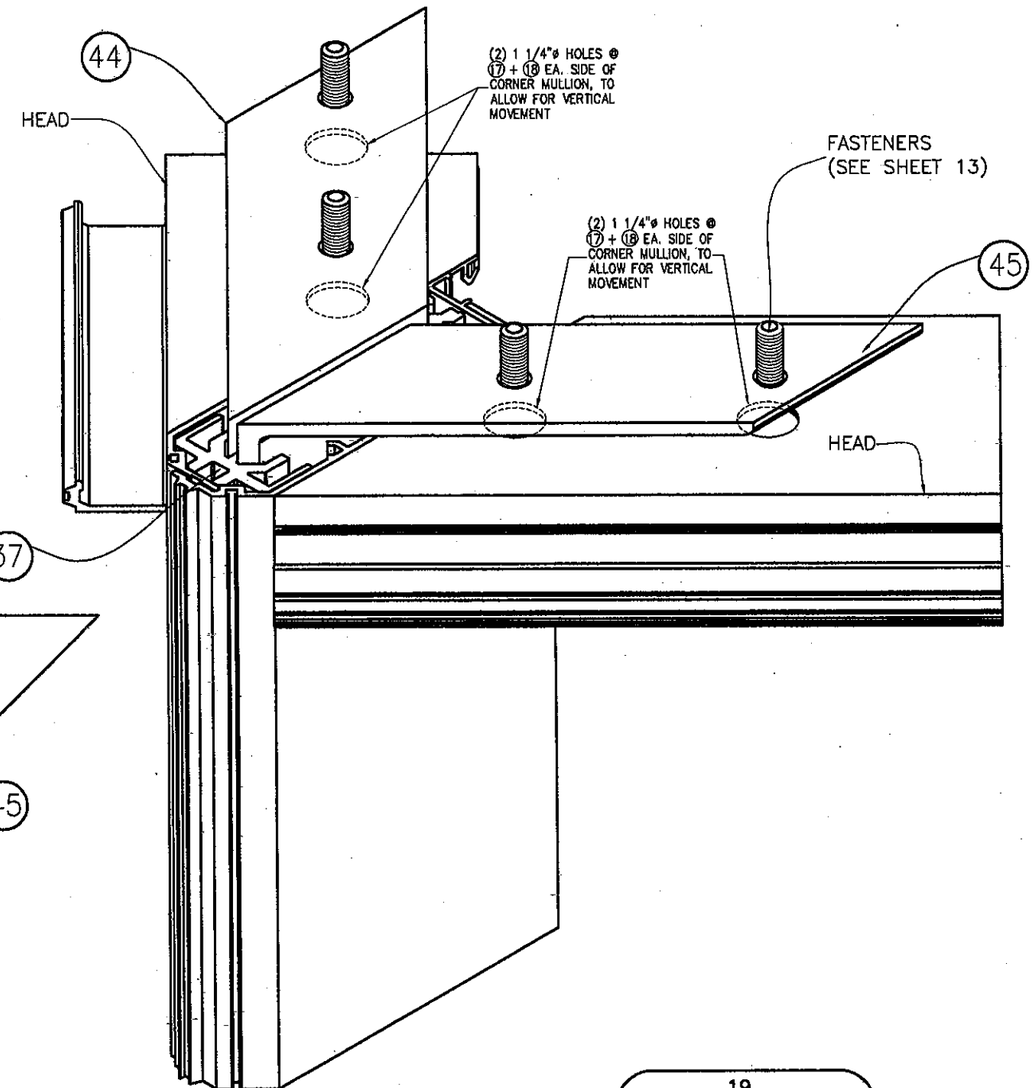

19
CORNER HEAD ANCHOR ISOMETRIC

FLORIDA BUILDING CODE (High Velocity Hurricane Zone)

M.C.V.
DRAWN BY

01/14/10
DATE

10-014
DRAWING No

SHEET 26 OF 33

HR-251 SSG CAPTURED CURTAIN WALL SYSTEM LARGE & SMALL MISSILE WITH INSULATING LAMINATED GLASS

Oldcastle BuildingEnvelope™
803 Airport Rd - Terrell, TX 75160
www.OldcastleBE.com - Phone 800-869-4567

REV. No	DESCRIPTION	DATE	REV. No	DESCRIPTION	DATE
1	GENERAL	01/04/11	-	-	-
-	-	-	-	-	-

©2010 TILTECO, INC

TILTECO INC.
TILLIT TESTING & ENGINEERING COMPANY
6355 N.W. 36th. St., Ste. 305, VIRGINIA GARDENS, FL 33166
Phone : (305)871-1530 . Fax : (305)871-1531
e-mail: tilteco@aol.com
EB-0006719
WALTER A. TILLIT Jr. P.E.
FLORIDA Lic. # 44167

WALTER A. TILLIT JR.
LICENSE
No. 44167
STATE OF FLORIDA
PROFESSIONAL ENGINEER

SIGNATURE DATE
P.E. SEAL

PRODUCT REVISED
as complying with the Florida Building Code
Acceptance No 10-0331.07
Expiration Date FEB. 11, 2016
By Miami-Dade Product Control

MIAMI-DADE COUNTY

MULLION AND JAMB SPLICES FOR TWIN SPAN ONLY (PLAN)

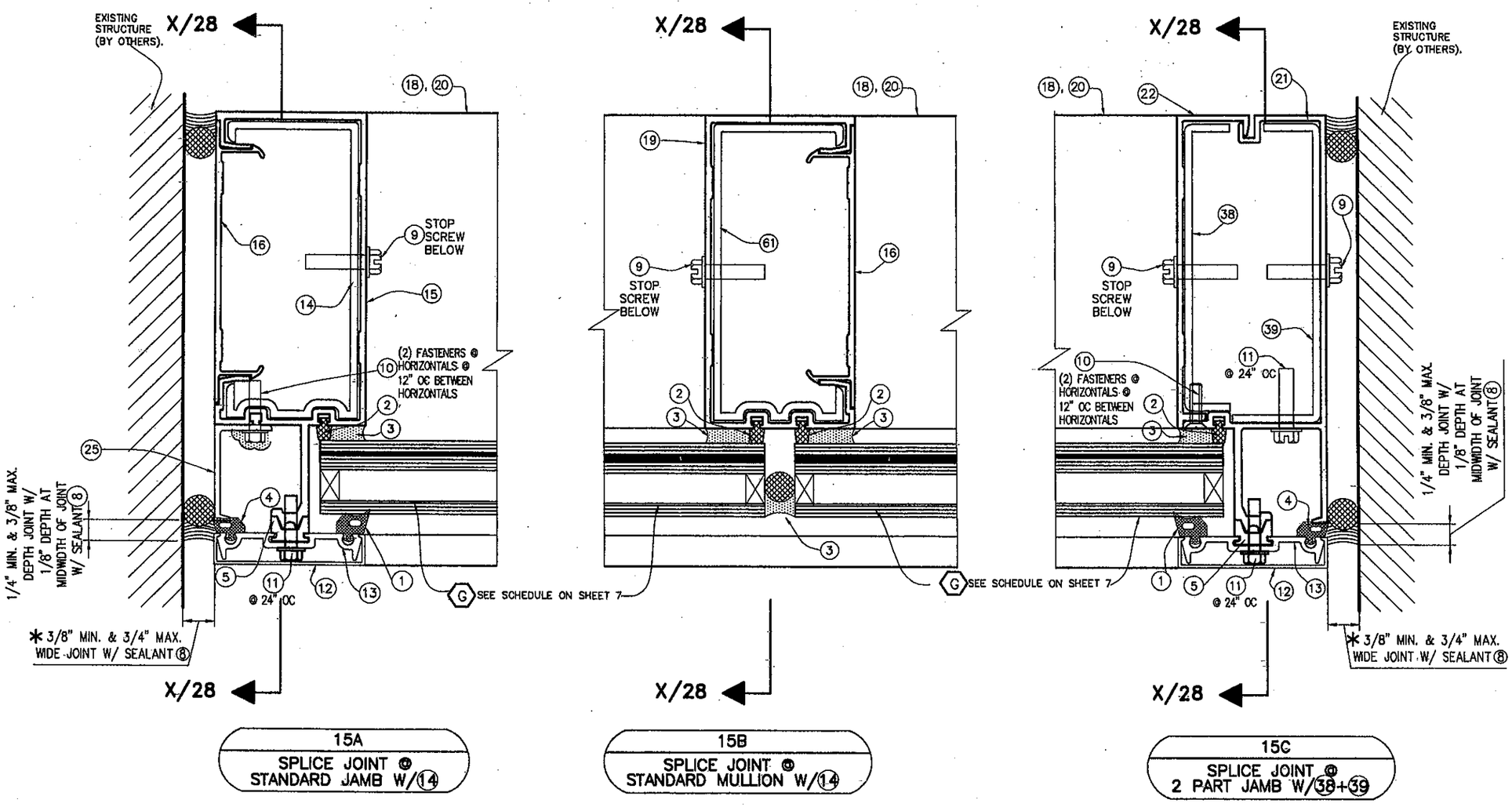

15A
SPLICE JOINT @ STANDARD JAMB W/14

15B
SPLICE JOINT @ STANDARD MULLION W/14

15C
SPLICE JOINT @ 2 PART JAMB W/38+39

* NOTE: ABOVE INDICATED MAXIMUM AND MINIMUM VALUES FOR SPECIFIED SEALANT VERTICAL JOINT WIDTH AT JAMBS CONNECTED TO WALL HAVE BEEN DETERMINED ONLY TAKING INTO CONSIDERATION THE ACTUAL MOVEMENT OF GLASS WALL AT JAMBS DUE TO THERMAL, WIND AND ITS OWN CONSTRUCTION TOLERANCE, AND NOT PERFORMANCE FACTORS FROM THE SURROUNDING STRUCTURE.

FLORIDA BUILDING CODE (High Velocity Hurricane Zone)

©2010 TILTECO, INC

HR-251 SSG CAPTURED CURTAIN WALL SYSTEM LARGE & SMALL MISSILE WITH INSULATING LAMINATED GLASS

Oldcastle BuildingEnvelope™
803 Airport Rd - Terrell, TX 75160
www.OldcastleBE.com - Phone 800-869-4567

REV. No	DESCRIPTION	DATE
1	GENERAL	01/04/11

REV. No	DESCRIPTION	DATE
-	-	-

M.C.V.
DRAWN BY

01/14/10
DATE

10-014
DRAWING No

SHEET 27 OF 33

TILTECO INC.
TILLIT TESTING & ENGINEERING COMPANY
6355 N.W. 36th. St., Ste. 305, VIRGINIA GARDENS, FL 33166
Phone : (305)871-1530 . Fax : (305)871-1531
e-mail: tilteco@aol.com
EB-0006719
WALTER A. TILLIT Jr. P.E.
FLORIDA Lic. # 44167

WALTER A. TILLIT JR. LICENSE No. 44167 STATE OF FLORIDA PROFESSIONAL ENGINEER

P.E. SEAL & SIGNATURE DATE

PRODUCT REVISED
as complying with the Florida Building Code
Acceptance No 10-0331.07
Expiration Date FEB 11, 2016
By
Miami Dade Product Control

MIAMI-DADE COUNTY

MULLION AND JAMB SPLICES FOR TWIN SPAN ONLY (SIDE VIEW)

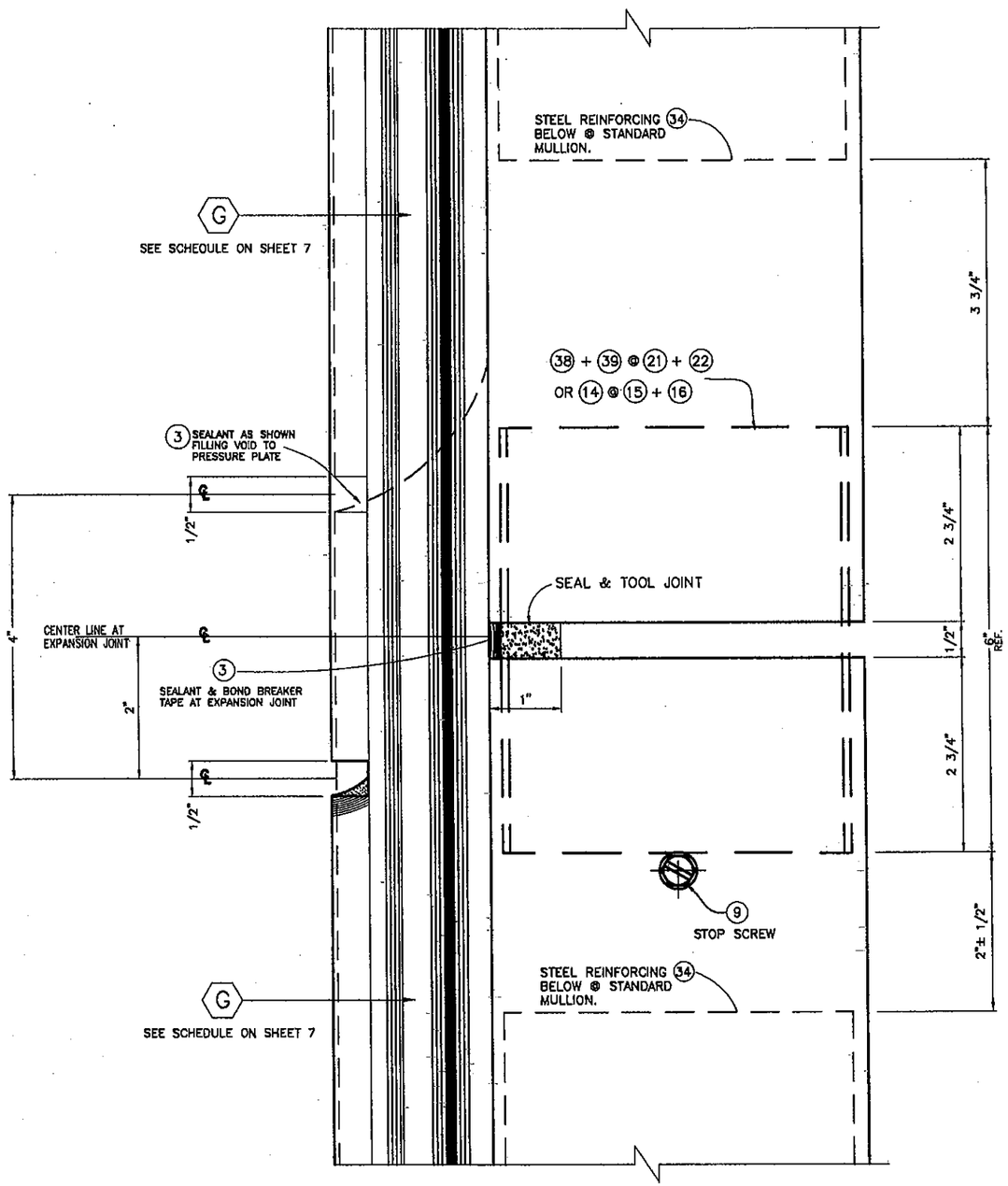

SECTION X–X
SPLICE JOINT @ STD MULLION/JAMB

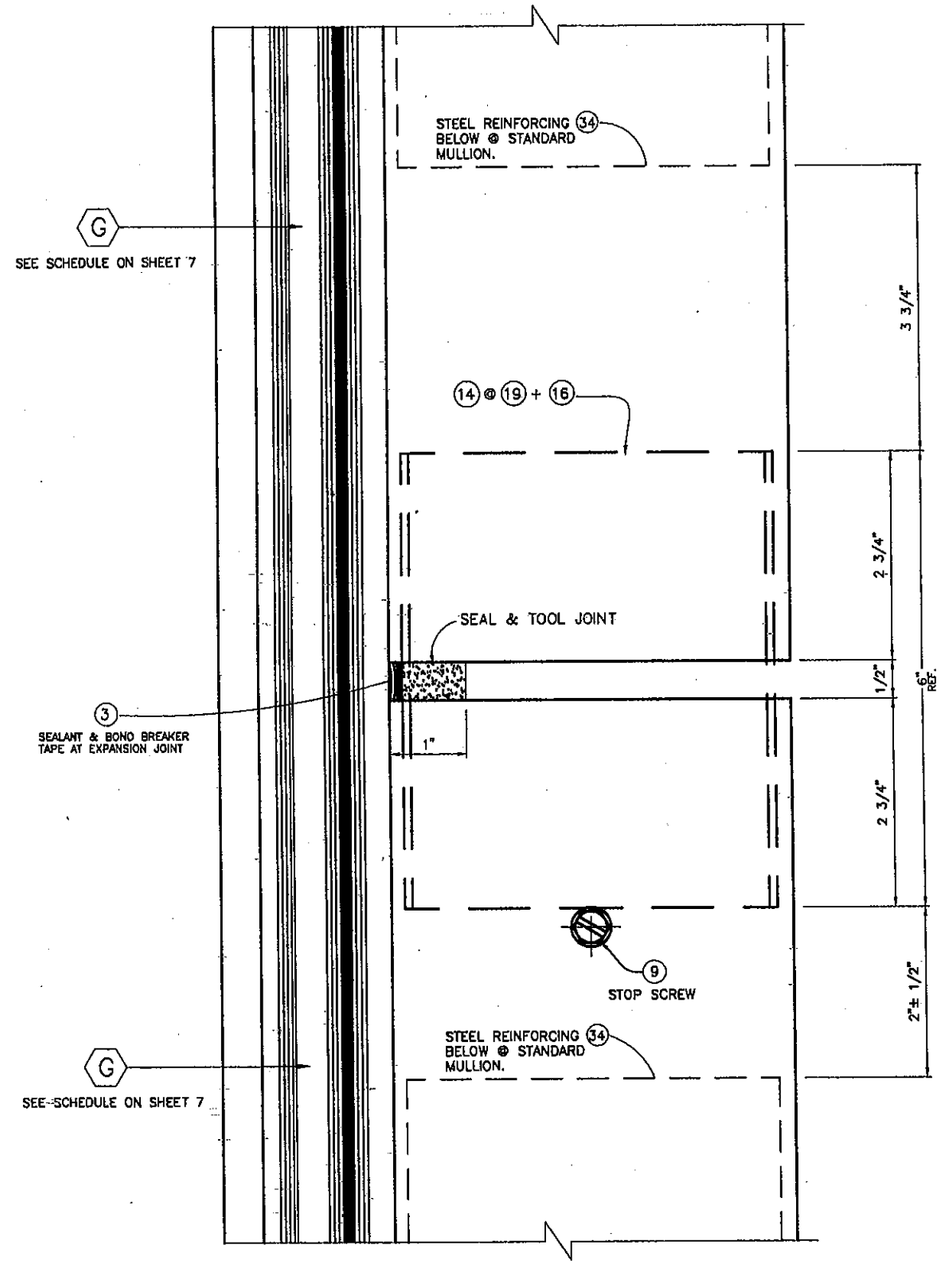

SECTION X–X
SPLICE JOINT @ BUTT GLAZE MULLION

FLORIDA BUILDING CODE (High Velocity Hurricane Zone)

M.C.V.
DRAWN BY

01/14/10
DATE

10–014
DRAWING No

SHEET 28 OF 33

HR-251 SSG CAPTURED CURTAIN WALL SYSTEM LARGE & SMALL MISSILE WITH INSULATING LAMINATED GLASS

Oldcastle BuildingEnvelope™
803 Airport Rd - Terrell, TX 75160
www.OldcastleBE.com - Phone 800-869-4567

REV. No	DESCRIPTION	DATE	REV. No	DESCRIPTION	DATE
1	GENERAL	01/04/11	-	-	-
-	-	-	-	-	-

©2010 TILTECO, INC

TILTECO INC.
TILLIT TESTING & ENGINEERING COMPANY
6355 N.W. 36th. St., Ste. 305, VIRGINIA GARDENS, FL 33166
Phone : (305)871-1530 , Fax : (305)871-1531
e-mail: tilteco@aol.com
EB-0006719
WALTER A. TILLIT Jr. P.E.
FLORIDA Lic. # 44167

WALTER A. TILLIT JR.
LICENSE
No. 44167
STATE OF FLORIDA
PROFESSIONAL ENGINEER

P.E. SEAL/SIGNATURE/DATE

PRODUCT REVISED
as complying with the Florida Building Code
Acceptance No 10-0331.07
Expiration Date 2/22/2016
By Miami-Dade Product Control

MIAMI–DADE COUNTY

CORNER MULLION SPLICE FOR TWIN SPAN ONLY (PLAN)

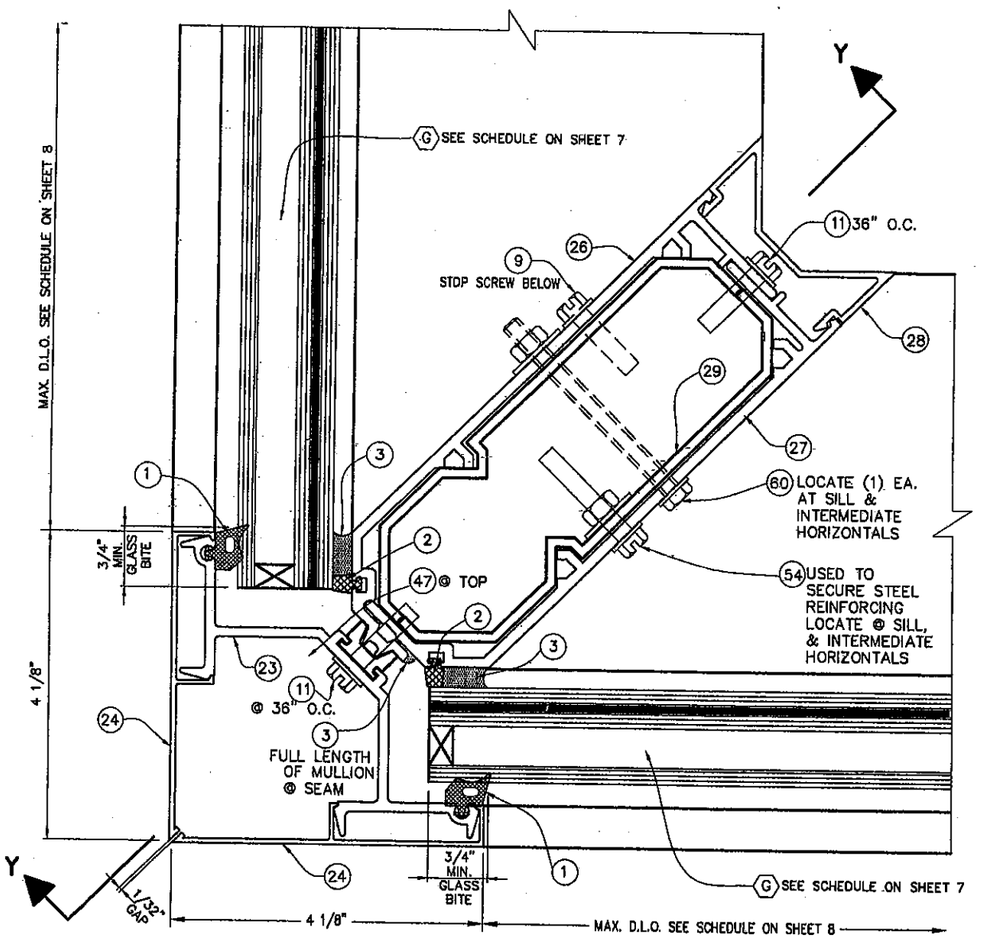

16
SPLICE JOINT @
90 DEG. CORNER
PLAN

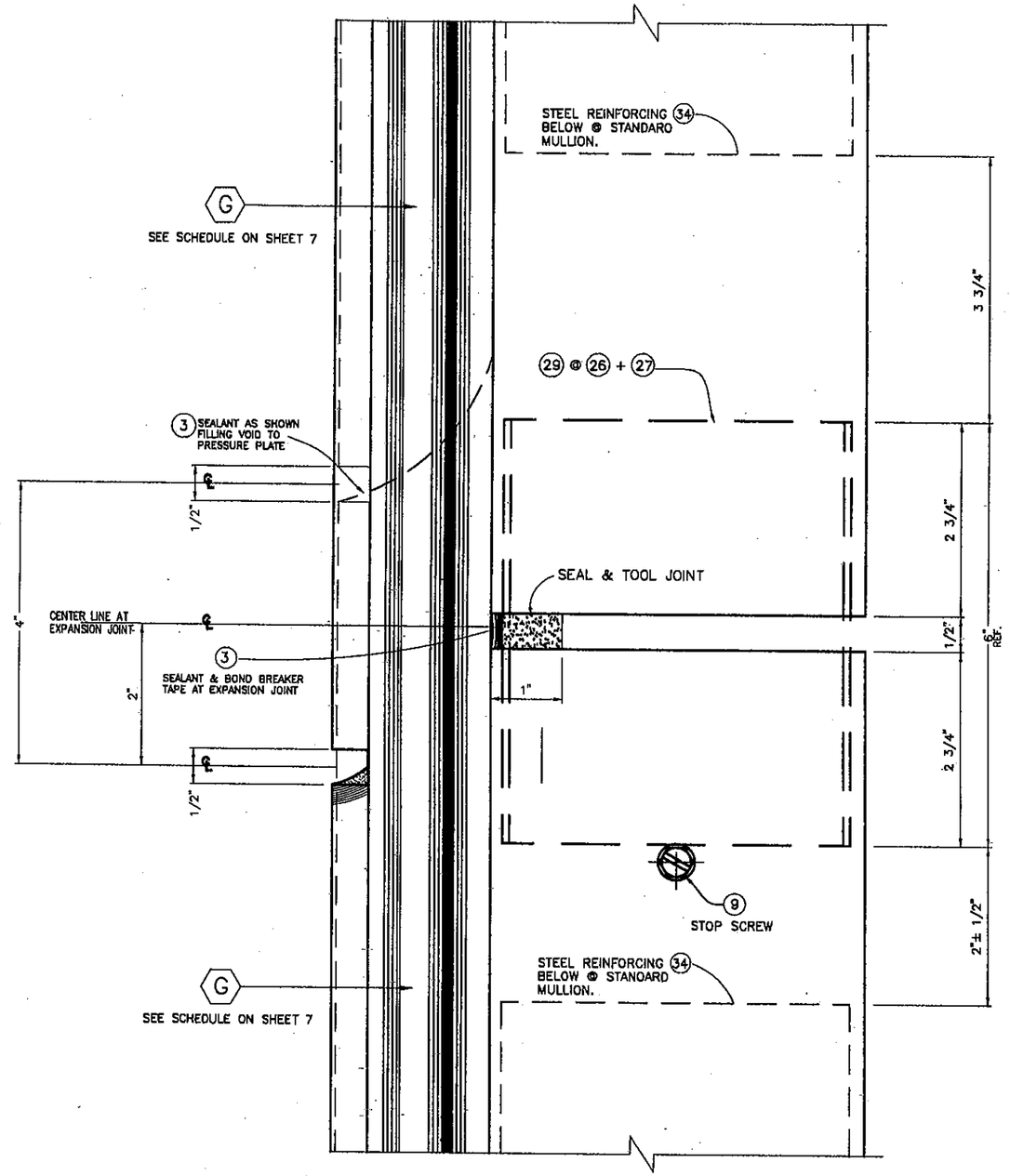

16
SPLICE JOINT @
90 DEG. CORNER
SECTION Y–Y

FLORIDA BUILDING CODE (High Velocity Hurricane Zone)

M.C.V.
DRAWN BY

01/14/10
DATE

10–014
DRAWING No

SHEET 29 OF 33

HR-251 SSG CAPTURED CURTAIN WALL SYSTEM LARGE & SMALL MISSILE WITH INSULATING LAMINATED GLASS

Oldcastle BuildingEnvelope™
803 Airport Rd - Terrell, TX 75160
www.OldcastleBE.com - Phone 800-869-4567

REV. No	DESCRIPTION	DATE	REV. No	DESCRIPTION	DATE
1	GENERAL	01/04/11	-	-	-
-	-	-	-	-	-

©2010 TILTECO, INC

TILTECO INC.
TILLIT TESTING & ENGINEERING COMPANY
6355 N.W. 36th. St., Sta. 305, VIRGINIA GARDENS, FL 33166
Phone : (305)871-1530 . Fax : (305)871-1531
e-mail: tilteco@aol.com
EB-0006719
WALTER A. TILLIT Jr. P.E.
FLORIDA Lic. # 44167

WALTER A. TILLIT JR. LICENSE No. 44167 STATE OF FLORIDA PROFESSIONAL ENGINEER

P.E. SEAL SIGNATURE DATE

PRODUCT REVISED
as complying with the Florida Building Code
Acceptance No 10-0331.07
Expiration Date FEB 17 2016
By Miami-Dade Product Control

MIAMI–DADE COUNTY

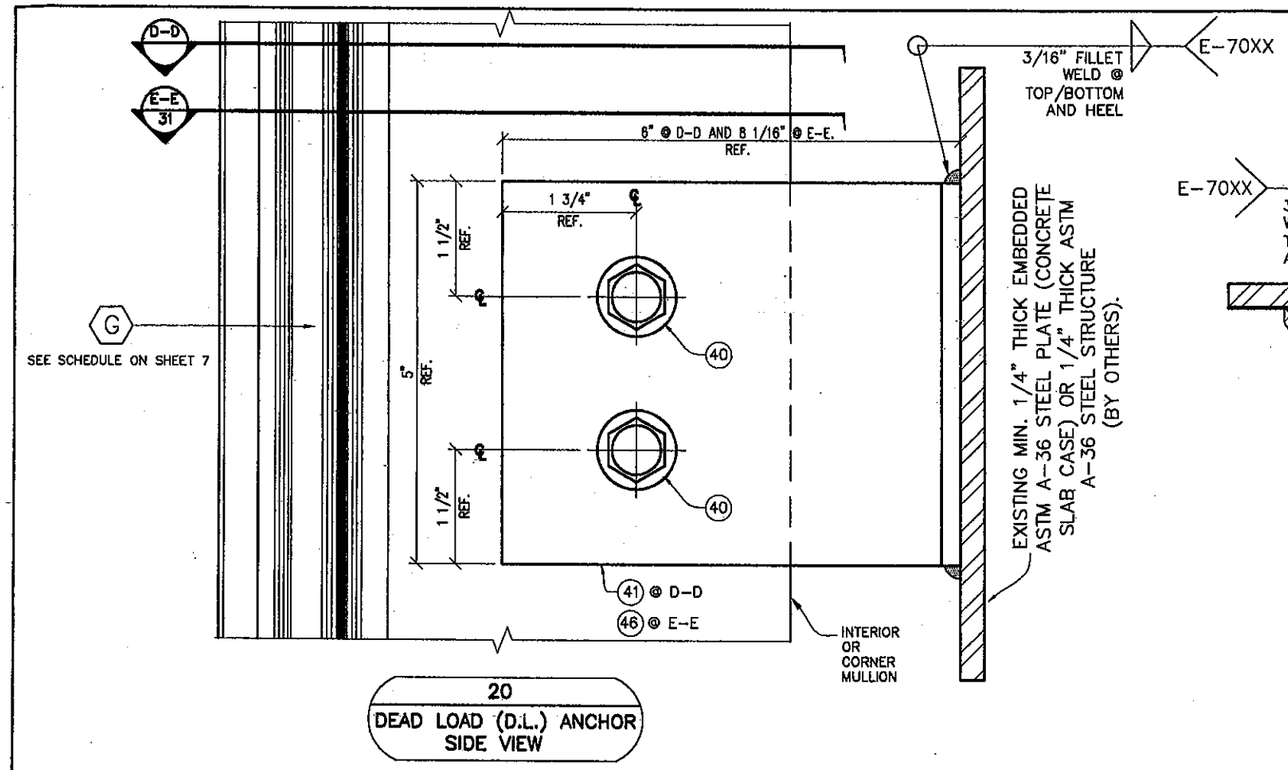

20
DEAD LOAD (D.L.) ANCHOR
SIDE VIEW

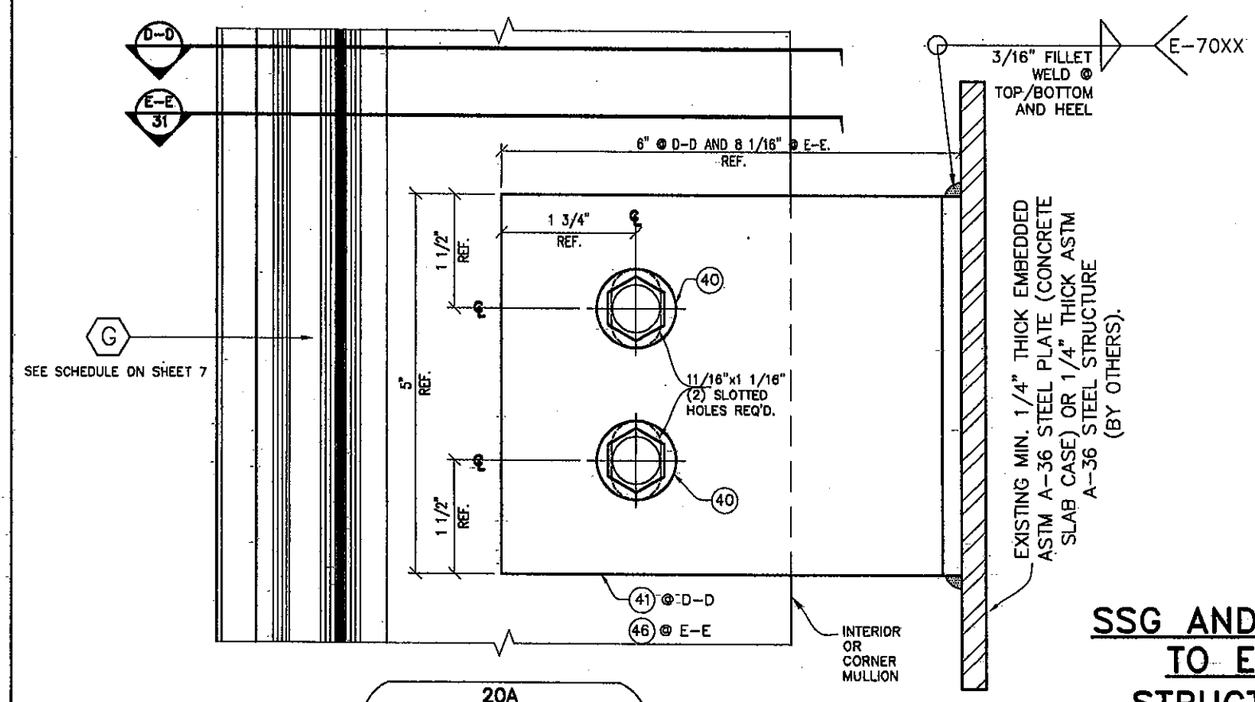

20A
WIND LOAD (W.L.) ANCHOR
SIDE VIEW

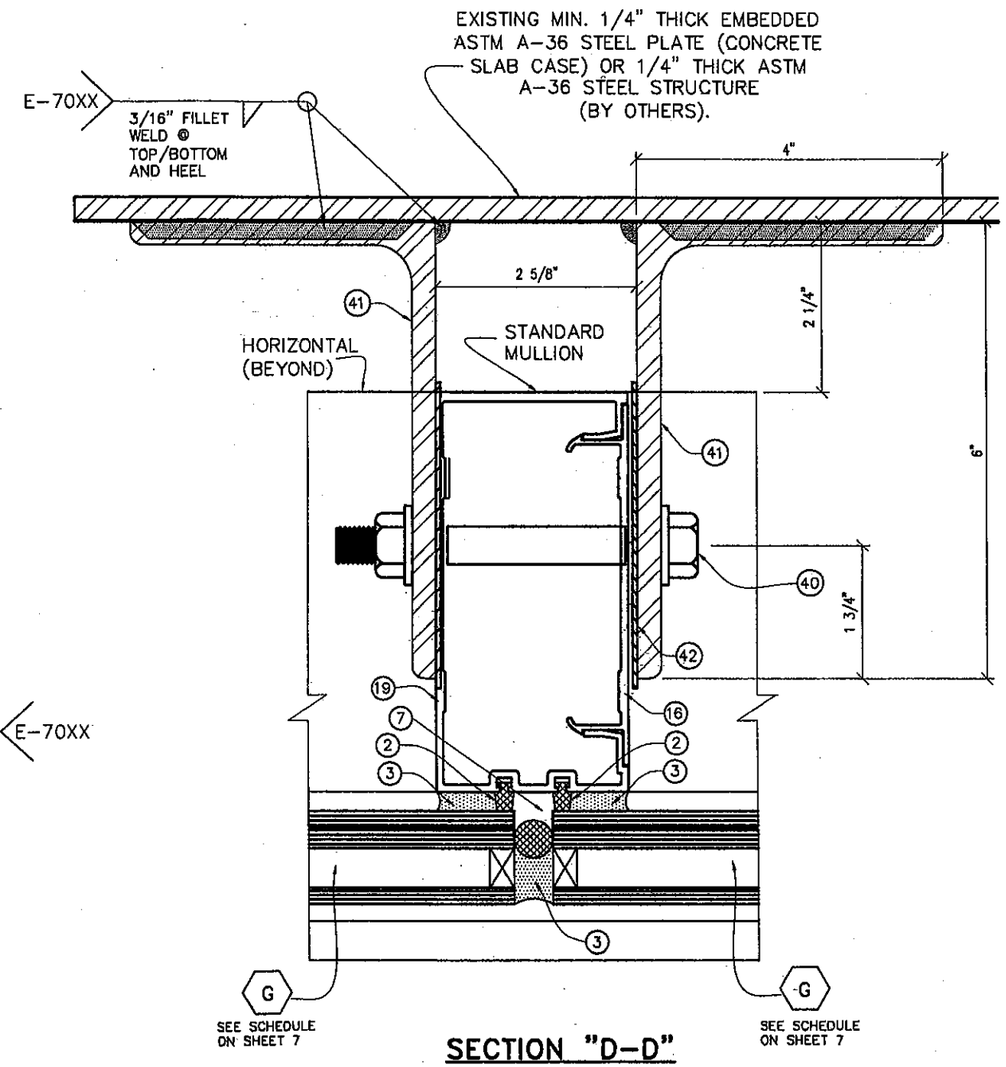

SECTION "D-D"
@ STANDARD
MULLION

SSG AND CORNER MULLIONS CONNECTION TO EXISTING INTERMEDIATE FLOOR STRUCTURE W/ DEAD OR WIND LOAD ANCHORS

FLORIDA BUILDING CODE (High Velocity Hurricane Zone)

©2010 TILTECO, INC

M.C.V.
DRAWN BY

01/14/10
DATE

10-014
DRAWING No

SHEET 30 OF 33

HR-251 SSG CAPTURED CURTAIN WALL
SYSTEM LARGE & SMALL MISSILE WITH
INSULATING LAMINATED GLASS

Oldcastle BuildingEnvelope™
803 Airport Rd - Terrell, TX 75160
www.OldcastleBE.com - Phone 800-869-4567

REV. No	DESCRIPTION	DATE
1	GENERAL	01/04/11

REV. No	DESCRIPTION	DATE
-	-	-
-	-	-
-	-	-

TILTECO INC.
TILLIT TESTING & ENGINEERING COMPANY
6355 N.W. 36th. St., Ste. 305, VIRGINIA GARDENS, FL. 33166
Phone : (305)871-1530 . Fax : (305)871-1531
e-mail: tilteco@aol.com
EB-0006719
WALTER A. TILLIT Jr. P.E.
FLORIDA Lic. # 44167

WALTER A. TILLIT JR.
LICENSE
No. 44167
STATE OF FLORIDA
PROFESSIONAL ENGINEER

P.E. SIGNATURE DATE

PRODUCT REVISED
as complying with the Florida
Building Code
Acceptance No 10-0331.07
Expiration Date FEB 17 2016
By
Miami-Dade Product Control

MIAMI-DADE COUNTY

CORNER MULLION CONNECTION TO EXISTING INTERMEDIATE FLOOR STRUCTURE W/ DEAD OR WIND LOAD ANCHORS (PLAN)

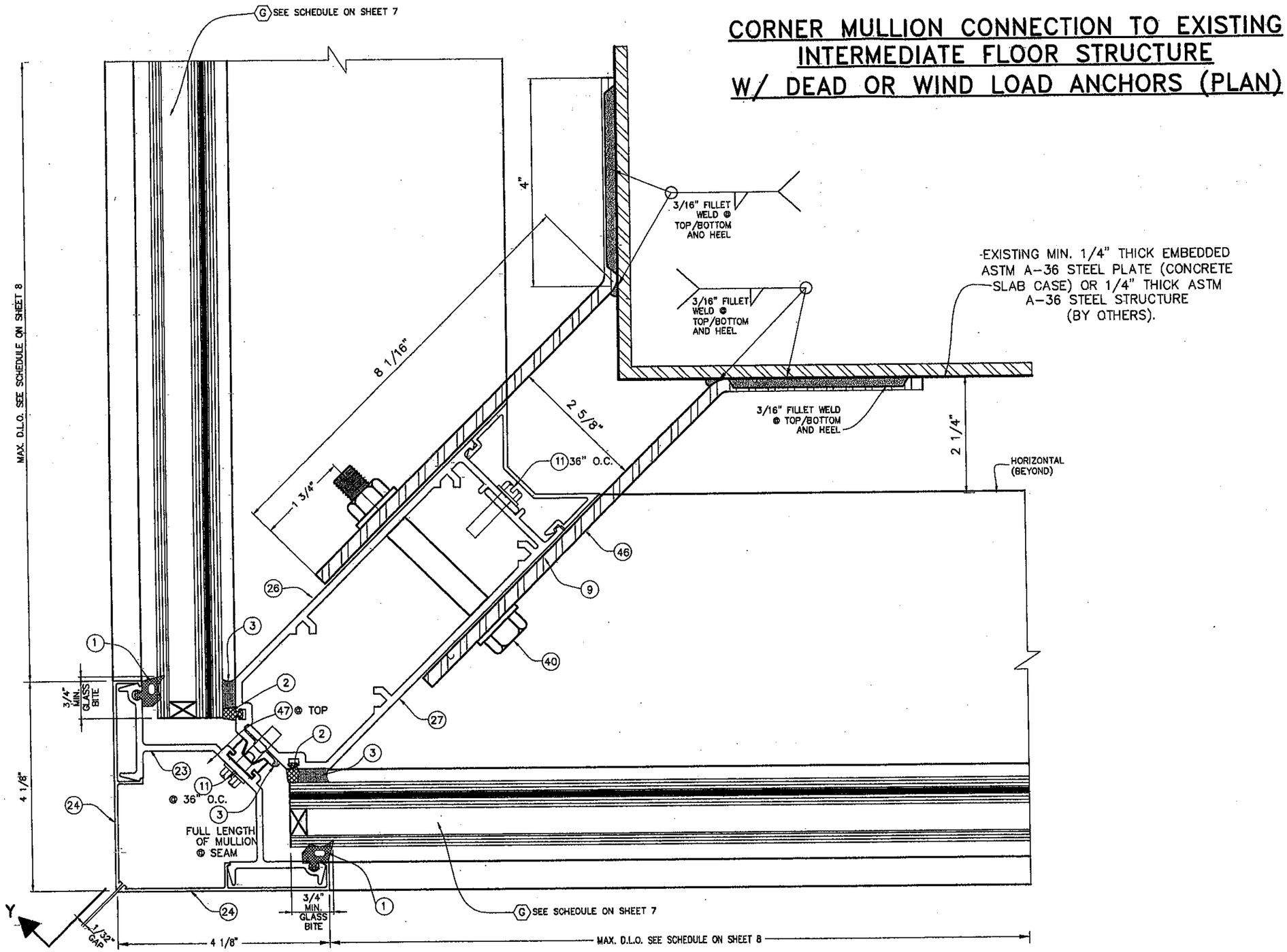

SECTION "E-E" @ CORNER MULLION

FLORIDA BUILDING CODE (High Velocity Hurricane Zone)

M.C.V. DRAWN BY

01/14/10 DATE

10-014 DRAWING No

SHEET 31 OF 33

HR-251 SSG CAPTURED CURTAIN WALL SYSTEM LARGE & SMALL MISSILE WITH INSULATING LAMINATED GLASS

Oldcastle BuildingEnvelope™
803 Airport Rd - Terrell, TX 75160
www.OldcastleBE.com - Phone 800-869-4567

REV. No	DESCRIPTION	DATE
1	GENERAL	01/04/11

REV. No	DESCRIPTION	DATE
-	-	-
-	-	-
-	-	-

©2010 TILTECO, INC

TILTECO INC.
TILLIT TESTING & ENGINEERING COMPANY
6355 N.W. 36th. St. Ste. 305, VIRGINIA GARDENS, FL. 33166
Phone : (305)871-1530 . Fax : (305)871-1531
e-mail: tilteco@aol.com
EB-0006719
WALTER A. TILLIT Jr. P.E.
FLORIDA Lic. # 44167

WALTER A. TILLIT JR. LICENSE No. 44167 STATE OF FLORIDA PROFESSIONAL ENGINEER

P.E. SEAL/SIGNATURE DATE

PRODUCT REVISED
as complying with the Florida Building Code
Acceptance No 10-0331.07
Expiration Date FEB 11 2016
By Miami-Dade Product Control

MIAMI-DADE COUNTY

DOOR HEADER CONNECTION TO CURTAIN WALL HORIZONTALS

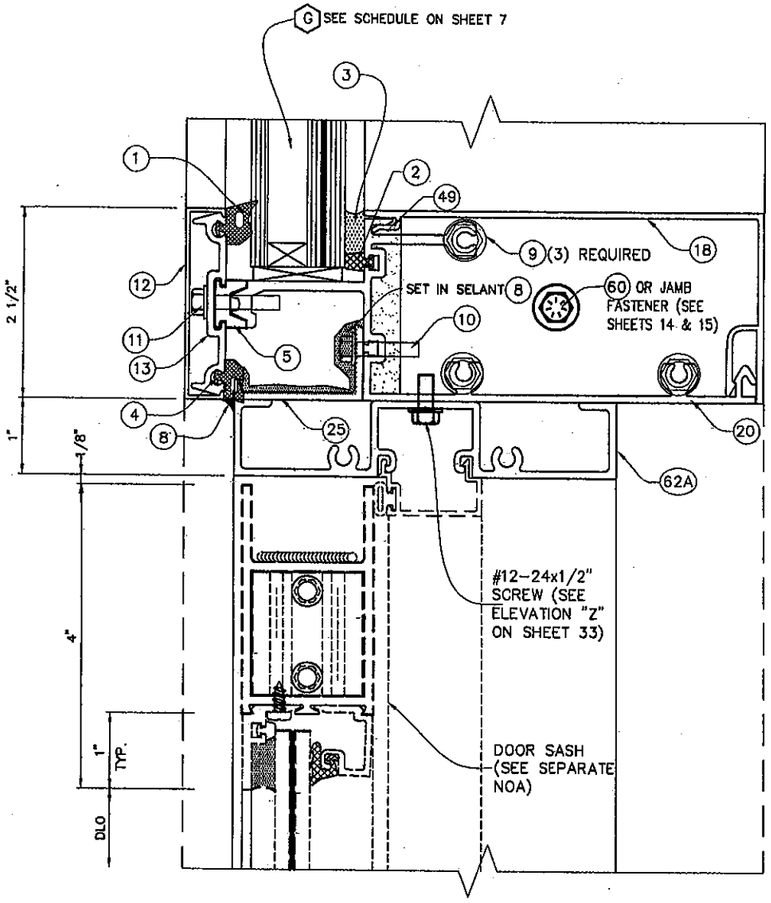

10
DR HEADER

DOOR SILL CONNECTION TO POURED CONCRETE STRUCTURE AND TO ADJACENT CURTAIN WALL MULLION "F" (SEE SHEET 9 FOR DEFINITION OF "F")

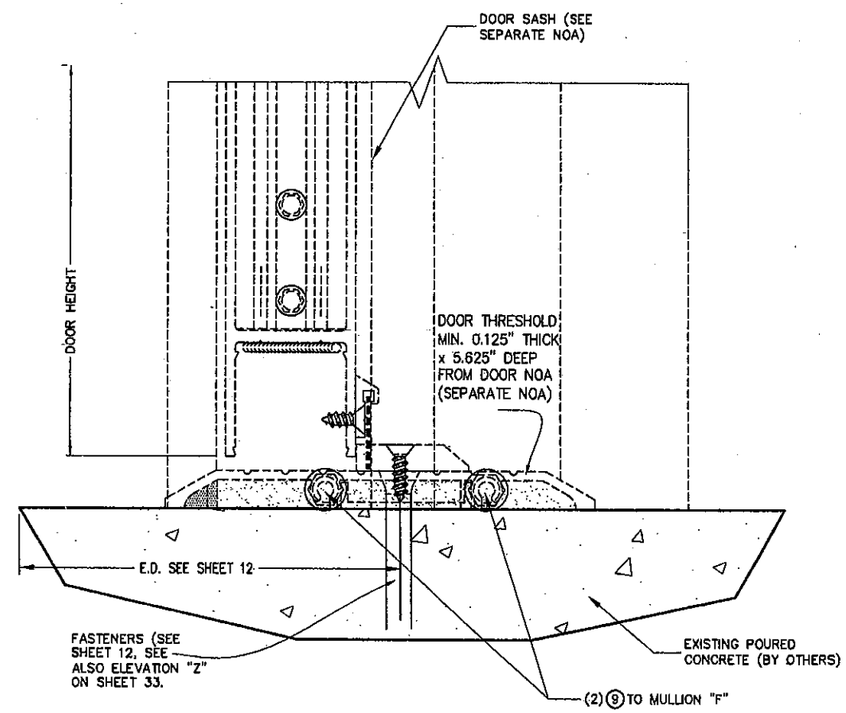

13
THRESHOLD

FLORIDA BUILDING CODE (High Velocity Hurricane Zone)

M.C.V.
DRAWN BY

01/14/10
DATE

10-014
DRAWING No

SHEET 32 OF 33

HR-251 SSG CAPTURED CURTAIN WALL SYSTEM LARGE & SMALL MISSILE WITH INSULATING LAMINATED GLASS

Oldcastle BuildingEnvelope™
803 Airport Rd - Terrell, TX 75160
www.OldcastleBE.com - Phone 800-869-4567

REV. No	DESCRIPTION	DATE	REV. No	DESCRIPTION	DATE
1	GENERAL	01/04/11	-	-	-
-	-	-	-	-	-

©2010 TILTECO, INC

TILTECO INC.
TILLIT TESTING & ENGINEERING COMPANY
6355 N.W. 36th. St., Ste. 305, VIRGINIA GARDENS, FL 33166
Phone : (305)871-1530 . Fax : (305)871-1531
e-mail: tilteco@aol.com
EB-0006719
WALTER A. TILLIT Jr. P.E.
FLORIDA Lic. # 44167

WALTER A. TILLIT JR.
LICENSE
No. 44167
STATE OF FLORIDA
PROFESSIONAL ENGINEER

P.E. SEAL/SIGNATURE/DATE

PRODUCT REVISED
as complying with the Florida Building Code
Acceptance No 10-0331.07
Expiration Date FEB 11, 2016
By Miami-Dade Product Control

MIAMI-DADE COUNTY

DOOR JAMBS CONNECTION TO CURTAIN WALL

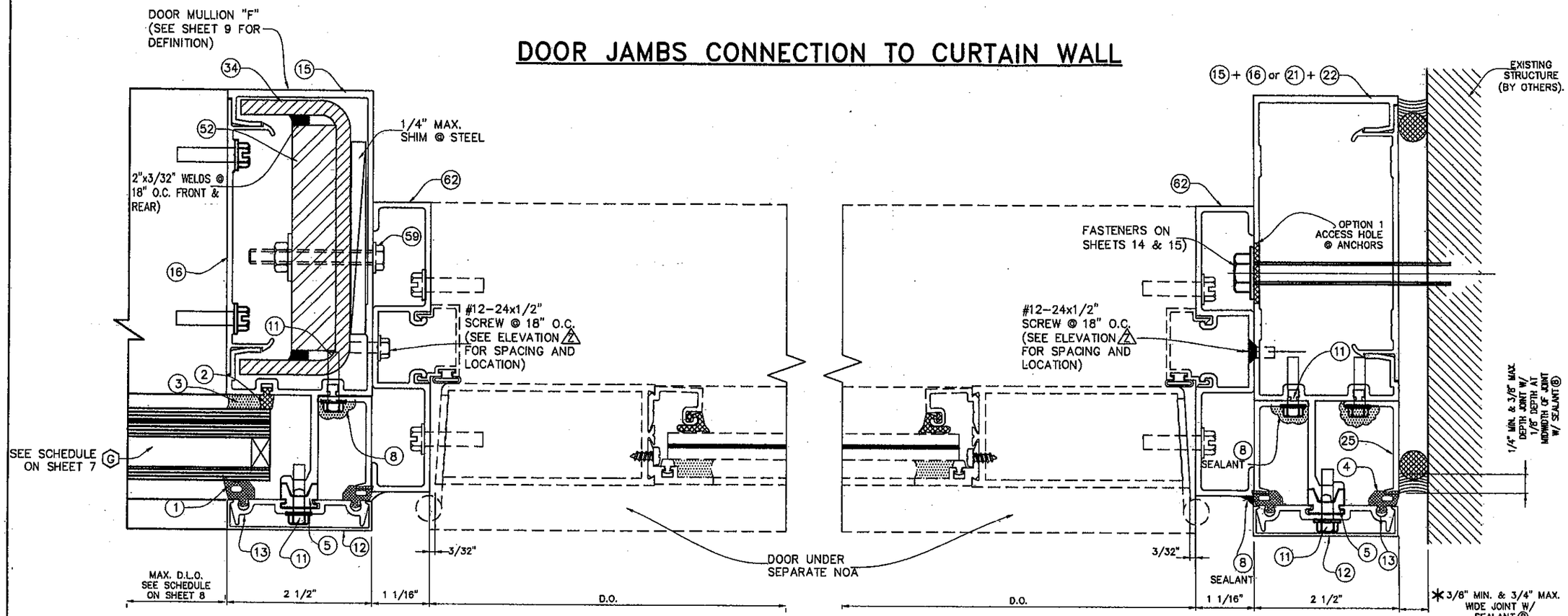

12
DOOR JAMB TO CURTAIN WALL DOOR JAMB MULLION

11
DOOR JAMB TO CURTAIN WALL JAMB

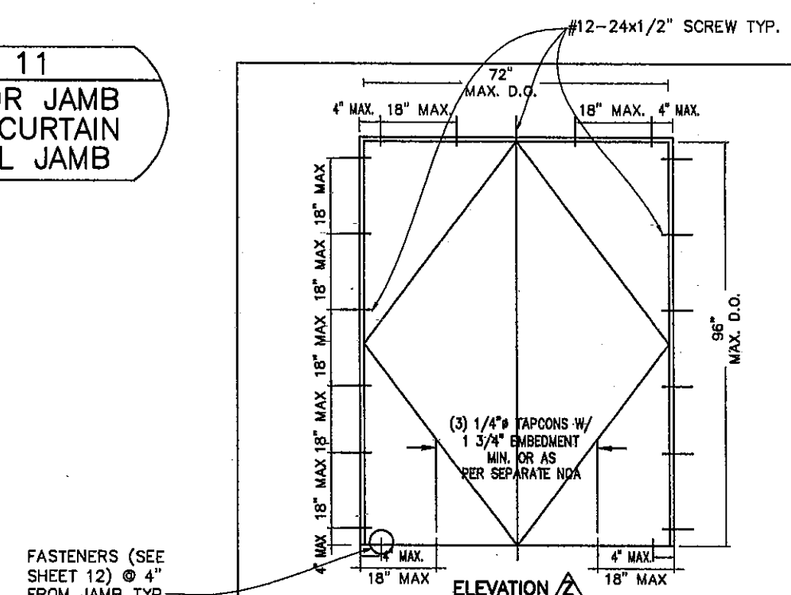

ELEVATION 2

LOCATIONS FOR DOOR FRAME ATTACHMENTS

ABOVE DIMENSIONS ARE MAXIMUM SIZES TESTED

* NOTE: INDICATED MAXIMUM AND MINIMUM VALUES FOR SPECIFIED SEALANT VERTICAL JOINT WIDTH AT JAMBS CONNECTED TO WALL HAVE BEEN DETERMINED ONLY TAKING INTO CONSIDERATION THE ACTUAL MOVEMENT OF GLASS WALL AT JAMBS DUE TO THERMAL, WIND AND ITS OWN CONSTRUCTION TOLERANCE, AND NOT PERFORMANCE FACTORS FROM THE SURROUNDING STRUCTURE.

FLORIDA BUILDING CODE (High Velocity Hurricane Zone)

M.C.V. DRAWN BY | 01/14/10 DATE | 10-014 DRAWING No | SHEET 33 OF 33

HR-251 SSG CAPTURED CURTAIN WALL SYSTEM LARGE & SMALL MISSILE WITH INSULATING LAMINATED GLASS

Oldcastle BuildingEnvelope™
803 Airport Rd - Terrell, TX 75160
www.OldcastleBE.com - Phone 800-869-4567

REV. No	DESCRIPTION	DATE	REV. No	DESCRIPTION	DATE
1	GENERAL	01/04/11	-	-	-
-	-	-	-	-	-

©2010 TILTECO, INC

TILTECO INC.
TILLIT TESTING & ENGINEERING COMPANY
6355 N.W. 36th. St., Ste. 305, VIRGINIA GARDENS, FL 33166
Phone : (305)871-1530 . Fax : (305)871-1531
e-mail: tilteco@aol.com
EB-00006719
WALTER A. TILLIT Jr. P.E.
FLORIDA Lic. # 44167

WALTER A. TILLIT JR. LICENSE No. 44167 STATE OF FLORIDA PROFESSIONAL ENGINEER

P.E. SEAL AND SIGNATURE REQUIRED

PRODUCT REVISED as complying with the Florida Building Code
Acceptance No 10-0331.07
Expiration Date Feb 11, 2016
By Manuel Perez
Miami-Dade Product Control

MIAMI-DADE COUNTY