MIAMI-DADE COUNTY
BUILDING CODE COMPLIANCE OFFICE (BCCO)
PRODUCT CONTROL DIVISION

MIAMI–DADE COUNTY, FLORIDA
METRO–DADE FLAGLER BUILDING
140 WEST FLAGLER STREET, SUITE 1107
MIAMI, FLORIDA 33130–1563
(305) 375–2902 FAX (305) 372–6339
www.miamidade.GOV/buildingcode

NOTICE OF ACCEPTANCE (NOA)

CGI WINDOWS AND DOORS, INC.
10100 NW 25 Street
Miami, FL 33172

SCOPE:

This NOA is being issued under the applicable rules and regulations governing the use of construction materials. The documentation submitted has been reviewed by Miami–Dade County Product Control Division and accepted by the Board of Rules and Appeals (BORA) to be used in Miami–Dade County and other areas where allowed by the Authority Having Jurisdiction (AHJ).

This NOA shall not be valid after the expiration date stated below. The Miami–Dade County Product Control Division (In Miami–Dade County) and/or the AHJ (in areas other than Miami–Dade County) reserve the right to have this product or material tested for quality assurance purposes. If this product or material fails to perform in the accepted manner, the manufacturer will incur the expense of such testing and the AHJ may immediately revoke, modify, or suspend the use of such product or material within their jurisdiction. BORA reserves the right to revoke this acceptance, if it is determined by Miami–Dade County Product Control Division that this product or material fails to meet the requirements of the applicable building code.

This product is approved as described herein, and has been designed to comply with the Florida Building Code, including the High Velocity Hurricane Zone.

DESCRIPTION: Series "Sentinel 120" Aluminum Horizontal Sliding Window – L.M.I.

APPROVAL DOCUMENT: Drawing No. **W10–18**, titled Series "**120 Sentinel Aluminum Horizontal Sliding Window (S.M.I.) (L.M.I.)**", sheets 1 through 11 of 11, dated 03/29/10, with the latest revision no. "**A**", dated 08/04/10, prepared by Al–Farooq Corporation, signed, sealed and dated 09/14/10 by Javad Ahmad, P. E., bearing the Miami–Dade County Product Control Approval stamp with the Notice of Acceptance number and Approval date by the Miami–Dade County Product Control Division.

MISSILE IMPACT RATING: Large and Small Missile Impact Resistant.

LABELING: Each unit shall bear a permanent label with the manufacturer's name or logo, city, state and following statement: "Miami–Dade County Product Control Approved", unless otherwise noted herein.

RENEWAL of this NOA shall be considered after a renewal application has been filed and there has been no change in the applicable building code negatively affecting the performance of this product.

TERMINATION of this NOA will occur after the expiration date or if there has been a revision or change in the materials, use, and/or manufacture of the product or process. Misuse of this NOA as an endorsement of any product, for sales, advertising or any other purposes shall automatically terminate this NOA. Failure to comply with any section of this NOA shall be cause for termination and removal of NOA.

ADVERTISEMENT: The NOA number preceded by the words Miami–Dade County, Florida, and followed by the expiration date may be displayed in advertising literature. If any portion of the NOA is displayed, then it shall be done in its entirety.

INSPECTION: A copy of this entire NOA shall be provided to the user by the manufacturer or its distributors and shall be available for inspection at the job site at the request of the Building Official.

This NOA consists of this page 1, evidence page E–1, as well as approval document mentioned above.

The submitted documentation was reviewed by **Jaime D. Gascon, P. E.**

MIAMI-DADE COUNTY APPROVED

J. Gascon
9/15/10

CGI WINDOWS AND DOORS, INC.

NOTICE OF ACCEPTANCE: EVIDENCE SUBMITTED

A. DRAWINGS

1. Manufacturer's die drawings and sections.
2. Drawing No **W10–18**, titled Series "**120 Sentinel Aluminum Horizontal Sliding Window (S.M.I.)(L.M.I.)**", sheets 1 through 11 of 11, dated 03/29/10, with the latest revision no. "**A**", dated 08/04/10, prepared by Al–Farooq Corporation, signed, sealed and dated 09/14/10 Javad Ahmad, P. E.

B. TESTS

1. Test reports on: 1) Air Infiltration Test, per FBC, TAS 202–94
   2) Uniform Static Air Pressure Test, Loading per FBC TAS 202–94
   3) Water Resistance Test, per FBC, TAS 202–94
   4) Large Missile Impact Test per FBC, TAS 201–94
   5) Cyclic Wind Pressure Loading per FBC, TAS 203–94
   6) Forced Entry Test, per FBC 2411 3.2.1, TAS 202–94

   along with marked–up drawings and installation diagram of horizontal sliding window, prepared by Hurricane Test Laboratory, LLC, Test Report No. **HTL–0080–0102–10**, dated 06/04/10, signed and sealed by Vinu J. Abraham, P. E.

C. CALCULATIONS

1. Anchor verification calculations and structural analysis, complying with FBC–2007, prepared by Al–Farooq Corporation, dated 05/05/10, signed and sealed by Javad Ahmad, P. E.

D. QUALITY ASSURANCE

1. Miami–Dade Building Code Compliance Office (BCCO).

E. MATERIAL CERTIFICATIONS

1. Notice of Acceptance No. **09–0312.03** issued to E.I. DuPont DeNemours & Co., Inc. for their "**DuPont Sentry Glass® Interlayer**" dated 05/13/09, expiring on 01/14/12.
2. Notice of Acceptance No. **06–0216.06** issued to Solutia Inc. for their "**Saflex IIIG Clear or colored interlayer**" dated 05/04/06, expiring on 05/21/11.
3. Notice of Acceptance No. **08–0520.08** issued to Solutia Inc. for their "**Vanceva Composites Glass Interlayer**" dated 7/17/08, expiring on 12/11/13.

F. STATEMENTS

1. Statement letter of conformance, no financial interest and compliance with the FBC–2007, dated May 05, 2010, signed and sealed by Javad Ahmad, P. E.
2. Laboratory compliance letter for Test Report No. **HTL–0080–0102–10**, issued by Hurricane Test Laboratory, LLC, dated June 04, 2010, signed and sealed by Vinu J. Abraham, P. E.
3. Proposal No. **09–0032** issued by BCCO, dated October 22, 2009, signed by Manuel Perez, P. E.

G. OTHERS

1. None.

Jaime D. Gascon, P. E.
Chief, Product Control Division
NOA No. 10–0510.12
Expiration Date: September 22, 2015
Approval Date: September 22, 2010

TYPICAL ELEVATION

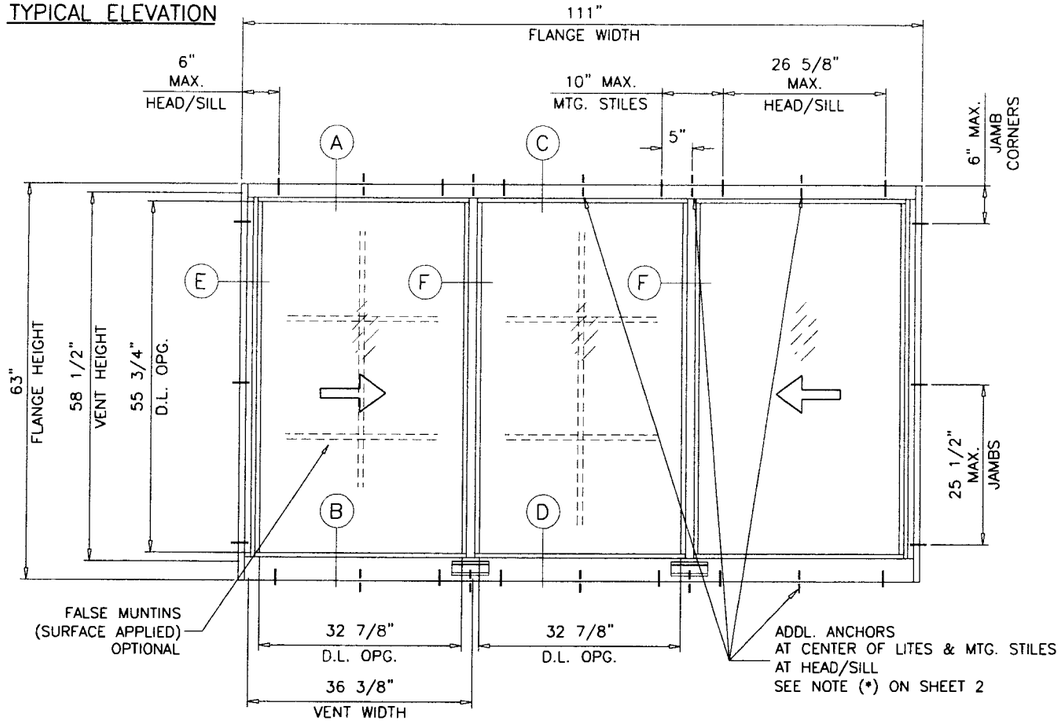

FLANGE & FLANGE ADAPTOR FRAME

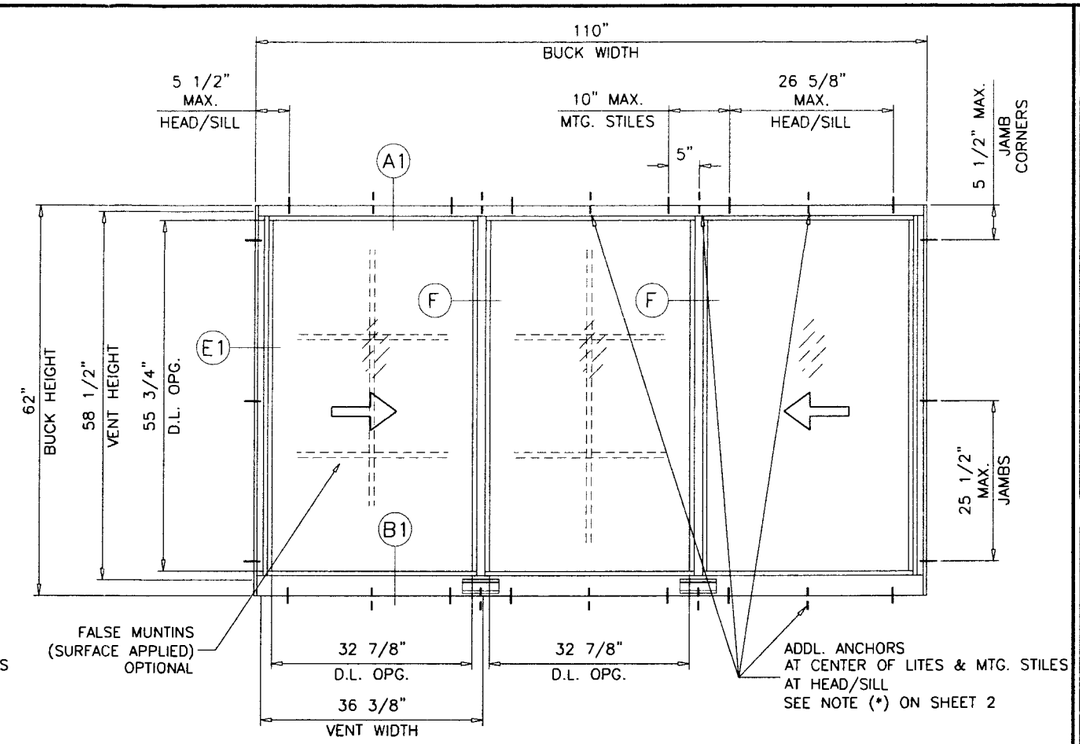

EQUAL LEG FRAME

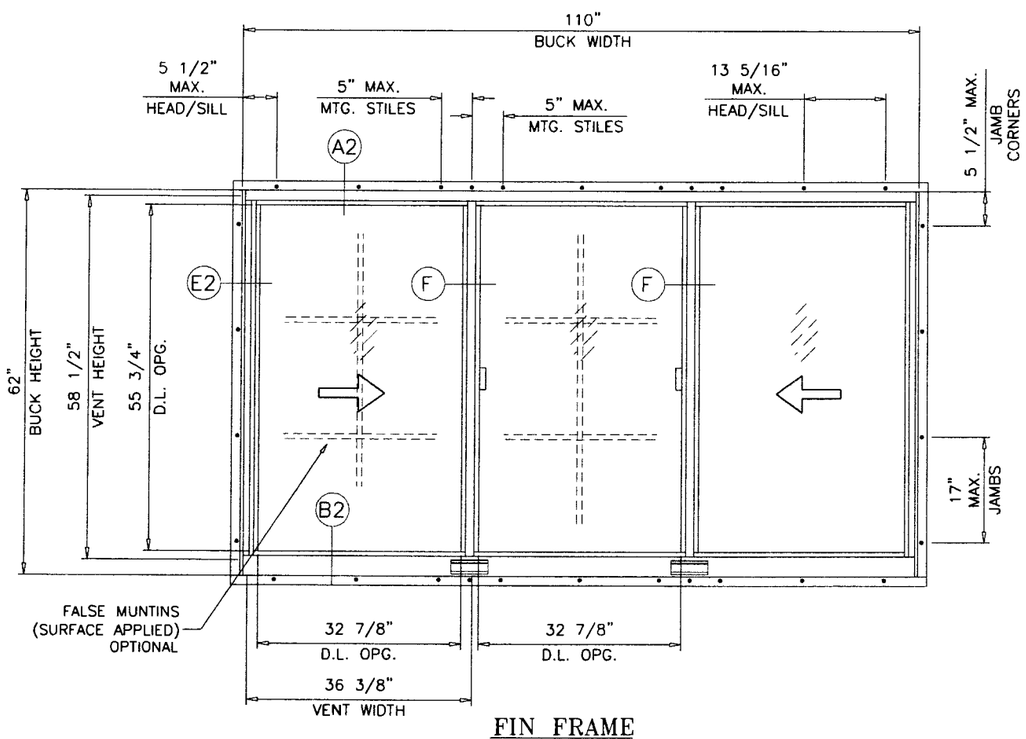

FIN FRAME

SERIES 120 SENTINEL ALUMINUM HORIZONTAL SLIDING WINDOW

DESIGN LOAD RATINGS FOR THESE WINDOWS TO BE AS PER CHARTS SHOWN ON SHEET 3.

APPROVAL APPLIES TO SINGLE UNITS OR SIDE BY SIDE COMBINATIONS OF H.R./H.R. OR HORIZONTAL ROLLING WITH OTHER MIAMI-DADE COUNTY APPROVED WINDOWS USING MIAMI-DADE COUNTY APPROVED MULLIONS IN BETWEEN.
LOWER DESIGN PRESSURE FROM WINDOWS OR MULLION APPROVAL WILL APPLY TO ENTIRE SYSTEM.

THIS PRODUCT HAS BEEN DESIGNED AND TESTED TO COMPLY WITH THE REQUIREMENTS OF THE FLORIDA BUILDING CODE 2007 EDITION INCLUDING HIGH VELOCITY HURRICANE ZONE (HVHZ).

WOOD BUCKS BY OTHERS, MUST BE ANCHORED PROPERLY TO TRANSFER LOADS TO THE STRUCTURE.

ANCHORS SHALL BE AS LISTED, SPACED AS SHOWN ON DETAILS, ANCHORS EMBEDMENT TO BASE MATERIAL SHALL BE BEYOND WALL DRESSING OR STUCCO.

ANCHORING OR LOADING CONDITIONS NOT SHOWN IN THESE DETAILS ARE NOT PART OF THIS APPROVAL.

A LOAD DURATION INCREASE IS USED IN DESIGN OF ANCHORS INTO WOOD ONLY.

MATERIALS INCLUDING BUT NOT LIMITED TO STEEL/METAL SCREWS, THAT COME INTO CONTACT WITH OTHER DISSIMILAR MATERIALS SHALL MEET THE REQUIREMENTS OF 2007 FLORIDA BLDG. CODE SECTION 2003.8.4.

Approved as complying with the Florida Building Code
Date 09/22/2010
NOA# 10-0510.12
Miami Dade Product Control Division
By

LAMINATED GLASS
INSULATING LAM. GLASS
SMALL MISSILE IMPACT
LARGE MISSILE IMPACT

Engr: JAVAD AHMAD
CIVIL
FLA. PE # 70592
C.A.N. 3538

SEP 14 2010

AL-FAROOQ CORPORATION
ENGINEERS & PRODUCT DEVELOPMENT
1235 S.W. 87 AVE
MIAMI, FLORIDA 33174
TEL. (305) 264-8100 FAX. (305) 262-6978
COMP-ANL\W10-03CGI

SERIES 120 SENTINEL ALUM HORIZ. SLIDING WDW. (S.M.I.)(L.M.I.)

CGI WINDOWS & DOORS
10100 N.W. 25TH STREET
MIAMI, FL. 33172
TEL. (305) 593-6590 FAX. (305) 593-6592

revisions:

no	date	by	description
A	08.04.10		NO CHANGE THIS SHEET

date: 03-29-10
scale: 1/2" = 1"
dr. by:
chk. by:

drawing no. W10-18

DESIGN LOAD CAPACITY – PSF (XO OR OX SIZES)

FLANGE DIMS.		BUCK DIMS.		GLASS TYPES 'A'&'A1'		GLASS TYPES 'B'&'B1'	
WIDTH	HEIGHT	WIDTH	HEIGHT	EXT.(+)	INT.(–)	EXT.(+)	INT.(–)
26–1/2"	26"	25–1/2"	25"	65.0	65.0	80.0	90.0
37"		36"		65.0	65.0	80.0	90.0
53–1/8"		52–1/8"		65.0	65.0	80.0	90.0
74"		73"		65.0	65.0	80.0	90.0
26–1/2"	38–3/8"	25–1/2"	37–3/8"	65.0	65.0	80.0	90.0
37"		36"		65.0	65.0	80.0	90.0
53–1/8"		52–1/8"		65.0	65.0	80.0	90.0
74"		73"		65.0	65.0	80.0	90.0
26–1/2"	50–5/8"	25–1/2"	49–5/8"	65.0	65.0	80.0	90.0
37"		36"		65.0	65.0	80.0	90.0
53–1/8"		52–1/8"		65.0	65.0	80.0	90.0
74"		73"		65.0	65.0	80.0	90.0
26–1/2"	63"	25–1/2"	62"	65.0	65.0	80.0	90.0
37"		36"		65.0	65.0	80.0	90.0
53–1/8"		52–1/8"		65.0	65.0	80.0	90.0
74"		73"		60.2	60.2	74.3	74.3
74"	63"	73"	62"	–	–	80.0	90.0 *

DESIGN LOAD CAPACITY – PSF (XOX SIZES)

FLANGE DIMS.		BUCK DIMS.		GLASS TYPES 'A'&'A1'		GLASS TYPES 'B'&'B1'	
WIDTH	HEIGHT	WIDTH	HEIGHT	EXT.(+)	INT.(–)	EXT.(+)	INT.(–)
74"	26"	73"	25"	65.0	65.0	80.0	90.0
106–1/4"		105–1/4"		65.0	65.0	80.0	90.0
111"		110"		65.0	65.0	80.0	90.0
74"	38–3/8"	73"	37–3/8"	65.0	65.0	80.0	90.0
106–1/4"		105–1/4"		65.0	65.0	80.0	90.0
111"		110"		65.0	65.0	80.0	90.0
74"	50–5/8"	73"	49–5/8"	65.0	65.0	80.0	90.0
106–1/4"		105–1/4"		65.0	65.0	80.0	90.0
111"		110"		65.0	65.0	80.0	90.0
74"	63"	73"	62"	65.0	65.0	80.0	90.0
106–1/4"		105–1/4"		61.6	61.6	78.2	78.2
111"		110"		60.0	60.0	76.4	76.4
106–1/4"	63"	105–1/4"	62"	–	–	80.0	90.0 *
111"		110"		–	–	80.0	90.0 *

DESIGN LOAD CAPACITY – PSF (XOX SIZES)

FLANGE DIMS.		BUCK DIMS.		GLASS TYPES 'A'&'A1'		GLASS TYPES 'B'&'B1'	
WIDTH	HEIGHT	WIDTH	HEIGHT	EXT.(+)	INT.(–)	EXT.(+)	INT.(–)
74"	26"	73"	25"	65.0	65.0	80.0	90.0
106–1/4"		105–1/4"		65.0	65.0	80.0	90.0
111"		110"		65.0	65.0	80.0	90.0
74"	38–3/8"	73"	37–3/8"	65.0	65.0	80.0	90.0
106–1/4"		105–1/4"		65.0	65.0	80.0	90.0
111"		110"		65.0	65.0	80.0	90.0
74"	50–5/8"	73"	49–5/8"	65.0	65.0	80.0	90.0
74"	63"	73"	62"	65.0	65.0	80.0	90.0

*ADDL. ANCHORS REQUIRED AT CENTER OF LITES AND MTG. STILE ENDS.

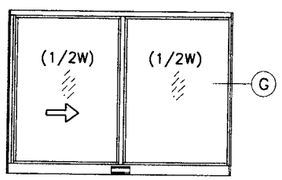

OPERATING VENTS TO BE 1/2 OF THE WINDOW WIDTH

'XO OR OX'

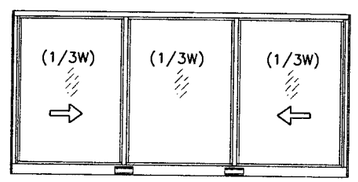

OPERATING VENTS TO BE 1/3 OF THE WINDOW WIDTH

'XOX'

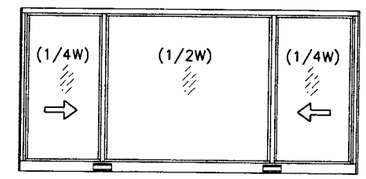

OPERATING VENTS TO BE 1/4 OF THE WINDOW WIDTH

'XOX'

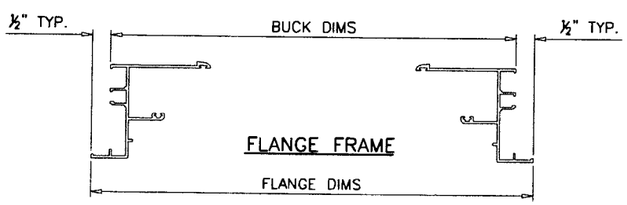

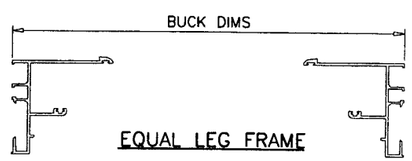

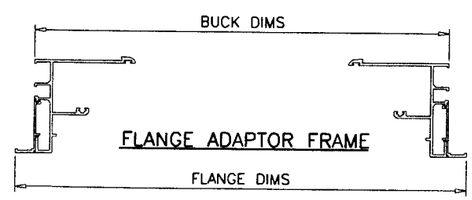

Approved as complying with the Florida Building Code
Date 09/22/2010
NOA# 10-0510.12
Miami Dade Product Control Division
By

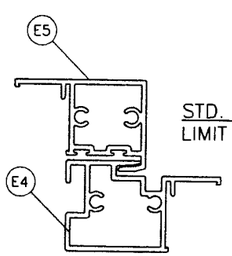

STD. MTG. RAIL:
LIMIT MAX. LOAD TO ±65.0 PSF

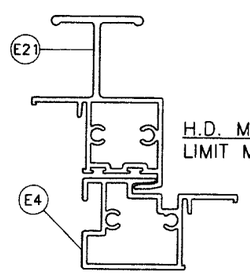

H.D. MTG. RAIL:
LIMIT MAX. LOAD TO +80.0
-90.0 PSF

FLANGE & FLANGE ADAPTOR FRAME
EQUAL LEG FRAME

NOTE:
GLASS CAPACITIES ON THIS SHEET ARE BASED ON ASTM E1300-04 (3 SEC. GUSTS) AND FLORIDA BUILDING COMMISSION DECLARATORY STATEMENT DCA05-DEC-219

Engr: JAVAD AHMAD
CIVIL
FLA. PE # 70592
C.A.N. 3538

SEP 14 2010

AL-FAROOQ CORPORATION
ENGINEERS & PRODUCT DEVELOPMENT
1235 S.W. 87 AVE
MIAMI, FLORIDA 33174
TEL. (305) 264-8100 FAX. (305) 262-6978
COMP-ANL\W10-03CGI

SERIES 120 SENTINEL ALUM HORIZ. SLIDING WDW. (S.M.I.)(L.M.I.)

CGI WINDOWS & DOORS
10100 N.W. 25TH STREET
MIAMI, FL. 33172
TEL. (305) 593-6590 FAX. (305) 593-6592

revisions:

no	date	by	description
A	08.04.10		NO CHANGE THIS SHEET

date: 03-29-10
scale: 1/2" = 1"
dr. by:
chk. by:

drawing no.
W10-18

DESIGN LOAD CAPACITY - PSF (XO OR OX SIZES)					
BUCK DIMS.		GLASS TYPES 'A'&'A1'		GLASS TYPES 'B'&'B1'	
WIDTH	HEIGHT	EXT.(+)	INT.(-)	EXT.(+)	INT.(-)
25-1/2"	25"	65.0	65.0	80.0	80.0
36"		65.0	65.0	80.0	80.0
52-1/8"		65.0	65.0	80.0	80.0
73"		65.0	65.0	80.0	80.0
25-1/2"	37-3/8"	65.0	65.0	80.0	80.0
36"		65.0	65.0	80.0	80.0
52-1/8"		65.0	65.0	80.0	80.0
73"		65.0	65.0	80.0	80.0
25-1/2"	49-5/8"	65.0	65.0	80.0	80.0
36"		65.0	65.0	80.0	80.0
52-1/8"		65.0	65.0	80.0	80.0
73"		65.0	65.0	80.0	80.0
25-1/2"	62"	65.0	65.0	80.0	80.0
36"		65.0	65.0	80.0	80.0
52-1/8"		65.0	65.0	80.0	80.0
73"		60.2	60.2	80.0	80.0

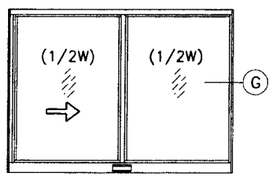

OPERATING VENTS TO BE 1/2 OF THE WINDOW WIDTH

'XO OR OX'

DESIGN LOAD CAPACITY - PSF (XOX SIZES)					
BUCK DIMS.		GLASS TYPES 'A'&'A1'		GLASS TYPES 'B'&'B1'	
WIDTH	HEIGHT	EXT.(+)	INT.(-)	EXT.(+)	INT.(-)
73"	25"	65.0	65.0	80.0	80.0
105-1/4"		65.0	65.0	80.0	80.0
110"		65.0	65.0	80.0	80.0
73"	37-3/8"	65.0	65.0	80.0	80.0
105-1/4"		65.0	65.0	80.0	80.0
110"		65.0	65.0	80.0	80.0
73"	49-5/8"	65.0	65.0	80.0	80.0
105-1/4"		65.0	65.0	80.0	80.0
110"		65.0	65.0	80.0	80.0
73"	62"	65.0	65.0	80.0	80.0
105-1/4"		61.6	61.6	80.0	80.0
110"		60.0	60.0	80.0	80.0

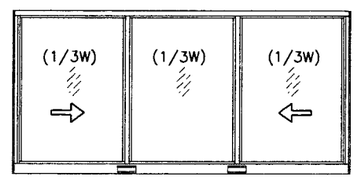

OPERATING VENTS TO BE 1/3 OF THE WINDOW WIDTH

'XOX'

DESIGN LOAD CAPACITY - PSF (XOX SIZES)					
BUCK DIMS.		GLASS TYPES 'A'&'A1'		GLASS TYPES 'B'&'B1'	
WIDTH	HEIGHT	EXT.(+)	INT.(-)	EXT.(+)	INT.(-)
73"	25"	65.0	65.0	80.0	80.0
105-1/4"		65.0	65.0	80.0	80.0
110"		65.0	65.0	80.0	80.0
73"	37-3/8"	65.0	65.0	80.0	80.0
105-1/4"		65.0	65.0	80.0	80.0
110"		65.0	65.0	80.0	80.0
73"	49-5/8"	65.0	65.0	80.0	80.0
73"	62"	65.0	65.0	80.0	80.0

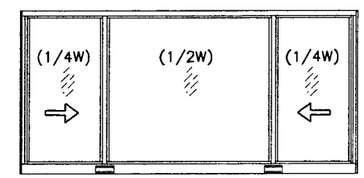

OPERATING VENTS TO BE 1/4 OF THE WINDOW WIDTH

'XOX'

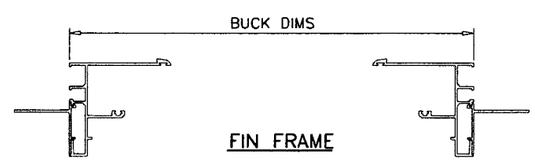

FIN FRAME

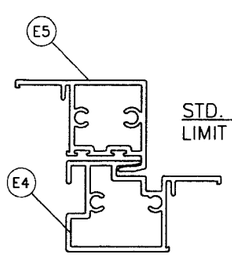

STD. MTG. RAIL:
LIMIT MAX. LOAD TO ±65.0 PSF

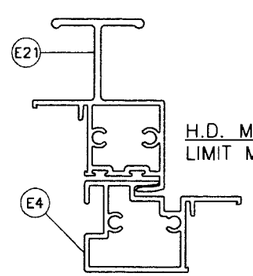

H.D. MTG. RAIL:
LIMIT MAX. LOAD TO ±80.0 PSF

Approved as complying with the Florida Building Code
Date 09/22/2010
NOA# 10-0510.12
Miami-Dade Product Control Division
By

NOTE:
GLASS CAPACITIES ON THIS SHEET ARE BASED ON ASTM E1300-04 (3 SEC. GUSTS) AND FLORIDA BUILDING COMMISSION DECLARATORY STATEMENT DCA05-DEC-219

FIN FRAME

Engr: JAVAD AHMAD
CIVIL
FLA. PE # 70592
C.A.N. 3538

SEP 14 2010

AL-FAROOQ CORPORATION
ENGINEERS & PRODUCT DEVELOPMENT
1235 S.W. 87 AVE
MIAMI, FLORIDA 33174
TEL. (305) 264-8100 FAX. (305) 262-6978

COMP-ANL\W10-03CGI

SERIES 120 SENTINEL ALUM HORIZ. SLIDING WDW. (S.M.I.)(L.M.I.)

CGI WINDOWS & DOORS
10100 N.W. 25TH STREET
MIAMI, FL. 33172
TEL. (305) 593-6590 FAX. (305) 593-6592

revisions:

no	date	by	description
A	08.04.10		NO CHANGE THIS SHEET

date: 03-29-10
scale: 1/2" = 1"
dr. by:
chk. by:

drawing no.
W10-18

sheet 3 of 11

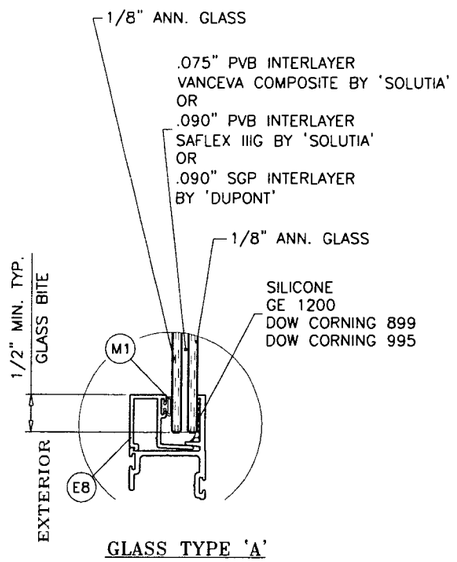

GLASS TYPE 'A'

5/16" NOMINAL LAM. GLASS

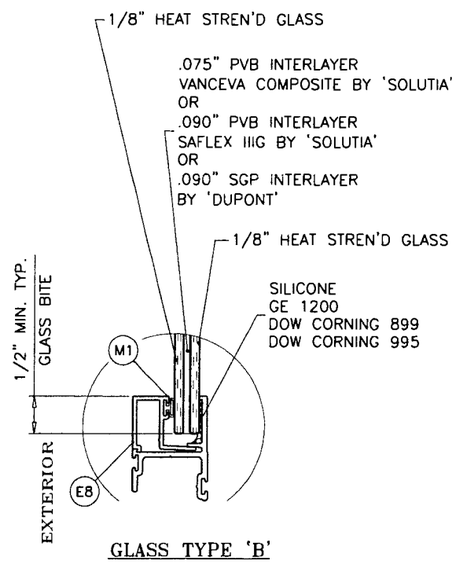

GLASS TYPE 'B'

5/16" NOMINAL LAM. GLASS

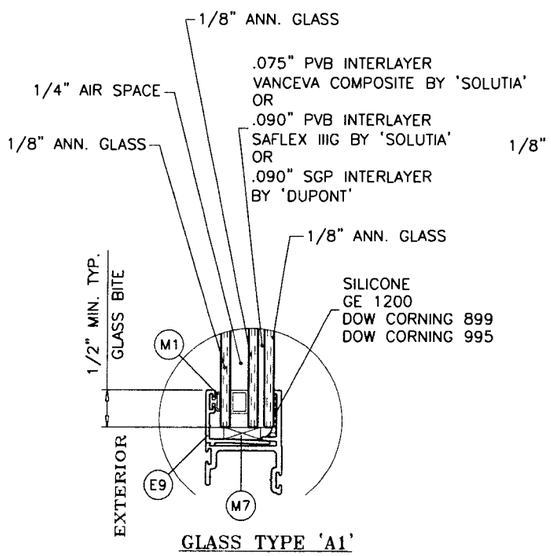

GLASS TYPE 'A1'

0.70" OVERALL INSUL. LAM. GLASS

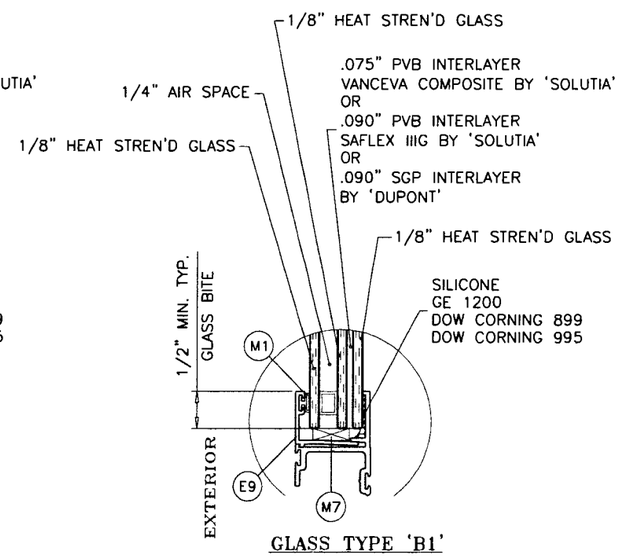

GLASS TYPE 'B1'

0.70" OVERALL INSUL. LAM. GLASS

NOTE:
IN ORDER TO QUALIFY FOR SMALL MISSILE IMPACT RATING
EXTERIOR PLY OF GLASS TYPES 'A1' & 'B1' MUST BE TEMPERED.

Engr: JAVAD AHMAD
CIVIL
FLA. PE # 70592
C.A.N. 3538

SEP 14 2010

Approved as complying with the
Florida Building Code
Date 09/22/2010
NOA# 10-0510.12
Miami Dade Product Control
Division
By:

AL-FAROOQ CORPORATION
ENGINEERS & PRODUCT DEVELOPMENT
1235 S.W. 87 AVE
MIAMI, FLORIDA 33174
TEL. (305) 264-8100 FAX. (305) 262-6978

COMP-ANL\W10-03CGI

SERIES 120 SENTINEL ALUM HORIZ. SLIDING WDW. (S.M.I.)(L.M.I.)

CGI WINDOWS & DOORS
10100 N.W. 25TH STREET
MIAMI, FL. 33172
TEL. (305) 593-6590 FAX. (305) 593-6592

revisions:

no	date	by	description
A	08.04.10		NO CHANGE THIS SHEET

date: 03-29-10
scale: 1/2" = 1"
dr. by:
chk. by:

drawing no.
W10-18

sheet 4 of 11

FLANGE & FLANGE ADAPTOR FRAME

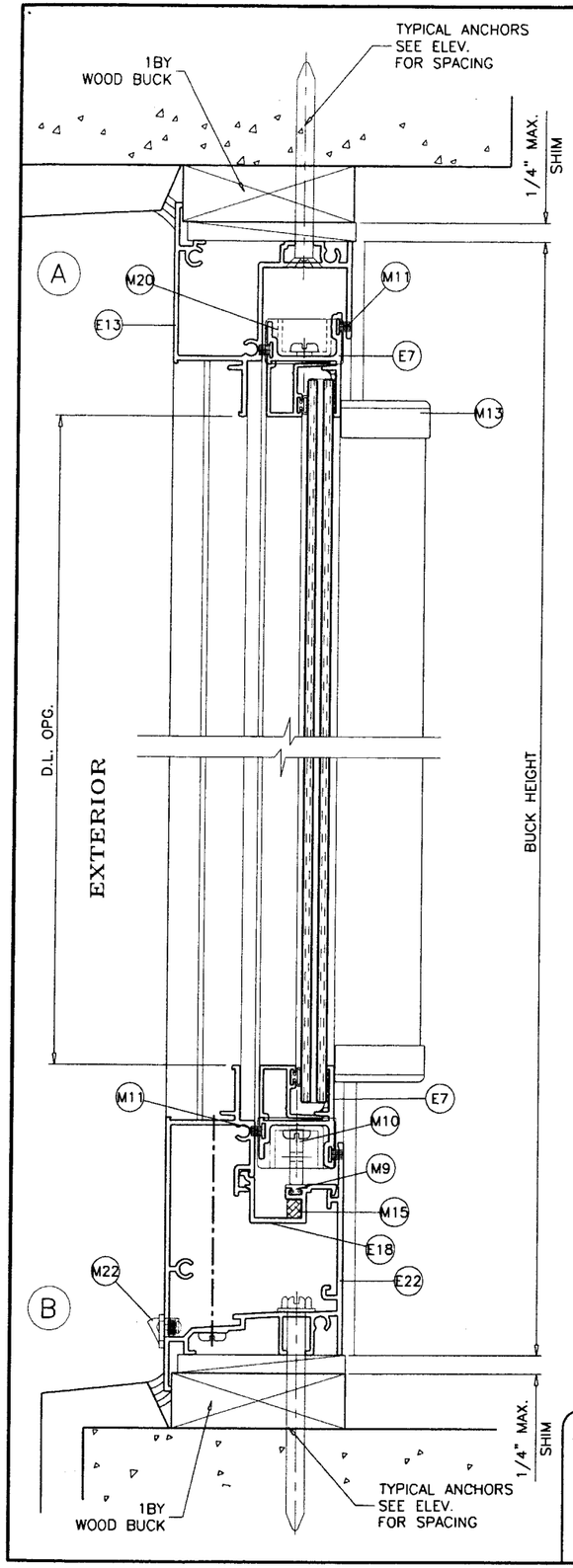

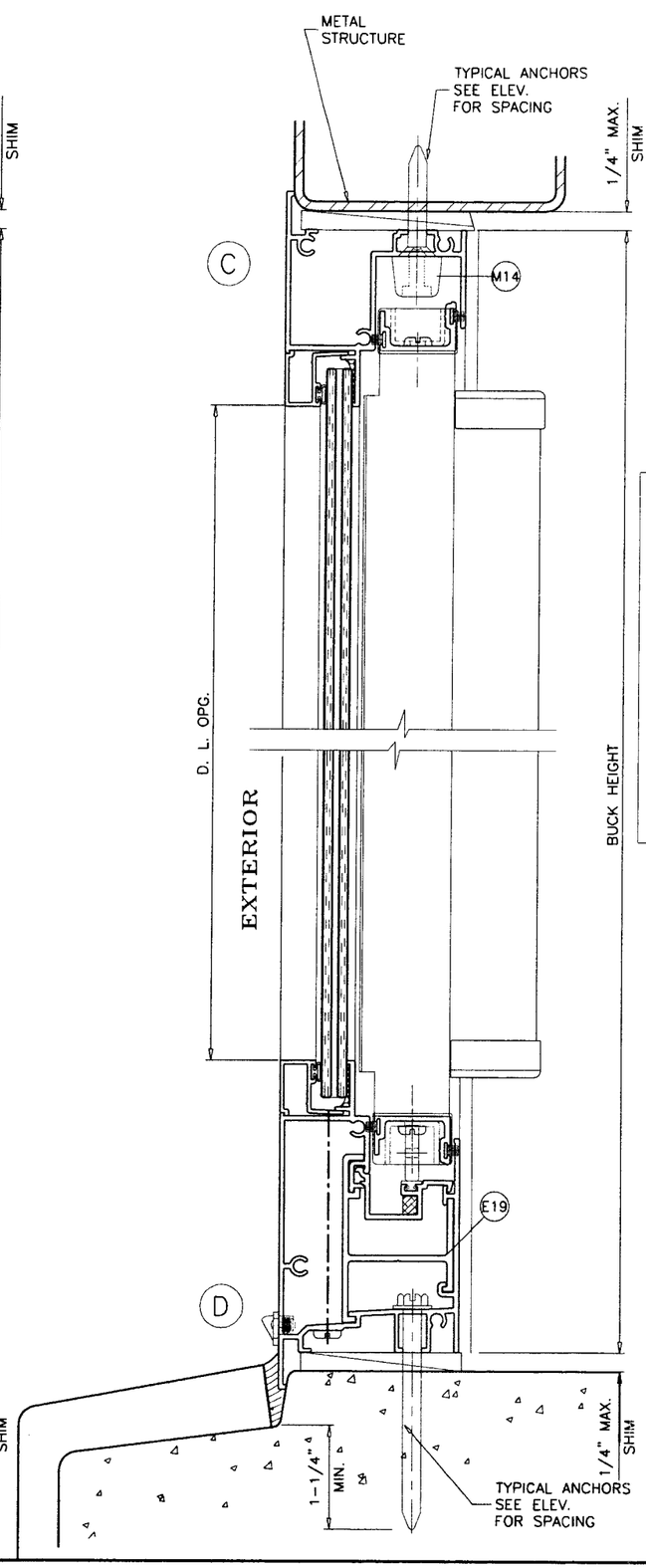

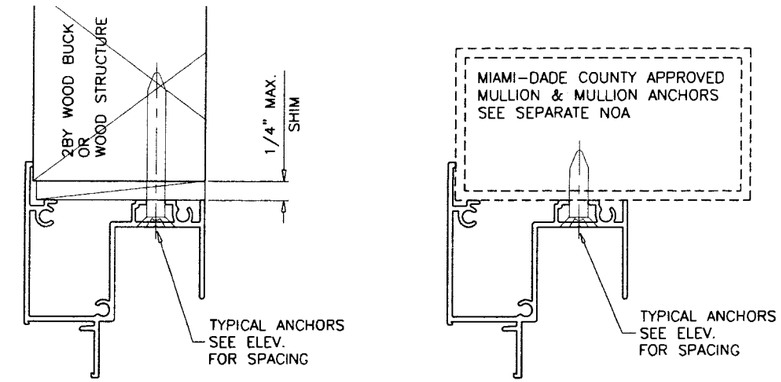

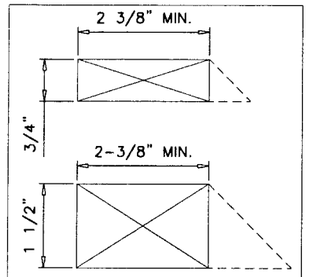

WHEN USED THE MIN. WOOD BUCK DEPTH SHALL BE 2⅜". THE USE OF DEEPER OR BEVELED WOODBUCKS IS PERMITTED.

WOOD BUCKS AND METAL STRUCTURE NOT BY CGI WDW. MUST SUSTAIN LOADS IMPOSED BY GLAZING SYSTEM AND TRANSFER THEM TO THE BUILDING STRUCTURE.

TYPICAL ANCHORS: SEE ELEV. FOR SPACING

1/4" DIA. TAPCON BY 'ITW' (Fu=120 KSI, Fy=92 KSI)
1/4" DIA. ULTRACON BY 'ELCO' (Fu=177 KSI, Fy=155 KSI)
INTO 2BY WOOD BUCKS OR WOOD STRUCTURES
1-3/8" MIN. PENETRATION INTO WOOD

THRU 1BY BUCKS INTO CONC. OR MASONRY
1-1/4" MIN. EMBED INTO CONC. OR MASONRY

DIRECTLY INTO CONC. OR MASONRY
1-1/4" MIN. EMBED INTO CONC. OR MASONRY

#14 SMS OR SELF DRILLING SCREWS (GRADE 2 CRS)

INTO MIAMI-DADE COUNTY APPROVED MULLIONS (MIN. THK.=.090")
INTO METAL STRUCTURES
STEEL : 1/8" THK. MIN. (Fy = 36 KSI MIN.)
ALUMINUM : 1/8" THK. MIN. (6063-T5 MIN.)
(STEEL IN CONTACT WITH ALUMINUM TO BE PLATED OR PAINTED)

TYPICAL EDGE DISTANCE

INTO CONCRETE AND MASONRY = 2" MIN.
INTO WOOD STRUCTURE = 1" MIN.
INTO METAL STRUCTURE = 3/4" MIN.

CONCRETE AT HEAD, SILL OR JAMBS f'c = 3000 PSI MIN.
C-90 HOLLOW/FILLED BLOCK AT JAMBS f'm = 2000 PSI MIN.

Engr: JAVAD AHMAD
CIVIL
FLA. PE # 70592
C.A.N. 3538

SEP 14 2010

Approved as complying with the Florida Building Code
Date 09/22/2010
NOA# 10-0510.12
Miami-Dade Product Control Division
By

AL-FAROOQ CORPORATION
ENGINEERS & PRODUCT DEVELOPMENT
1235 S.W. 87 AVE
MIAMI, FLORIDA 33174
TEL. (305) 264-8100 FAX. (305) 262-6978

COMP-ANL\W10-03CGI

SERIES 120 SENTINEL ALUM HORIZ. SLIDING WDW. (S.M.I.)(L.M.I.)

CGI WINDOWS & DOORS
10100 N.W. 25TH STREET
MIAMI, FL. 33172
TEL. (305) 593-6590 FAX. (305) 593-6592

revisions:

no	date	by	description
A	08.04.10		REV. PER BCCO COMMENTS

date: 03-29-10
scale: 1/2" = 1"
dr. by:
chk. by:

drawing no.
W10-18

FLANGE & FLANGE ADAPTOR FRAME

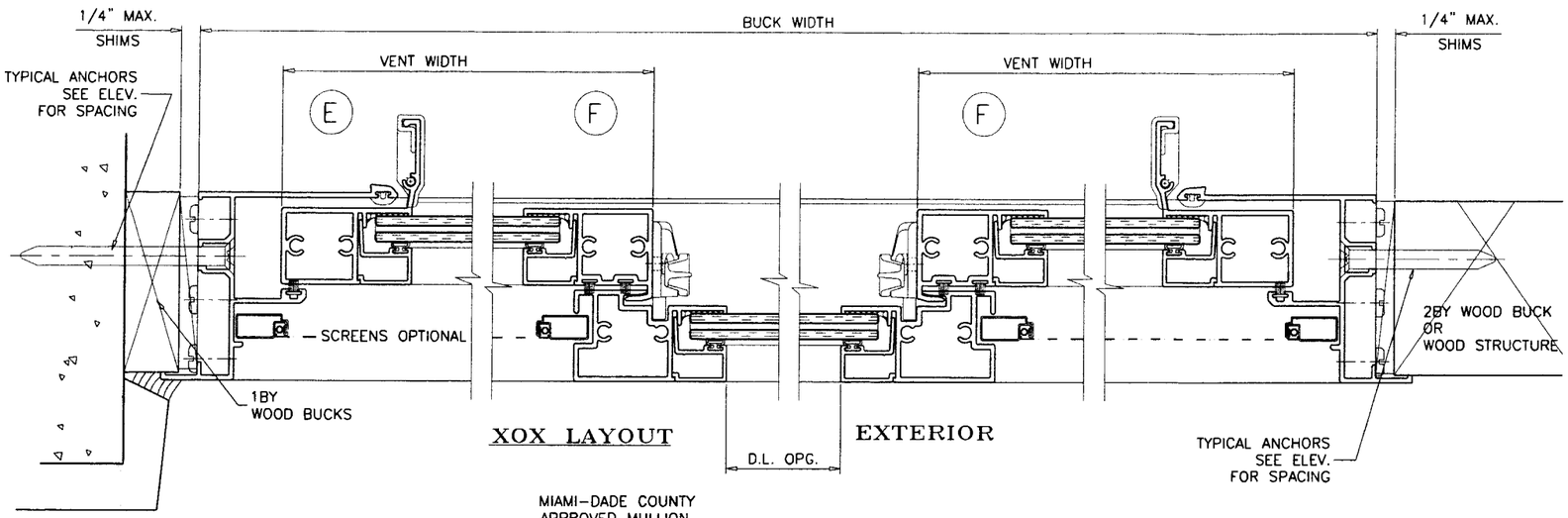

XOX LAYOUT

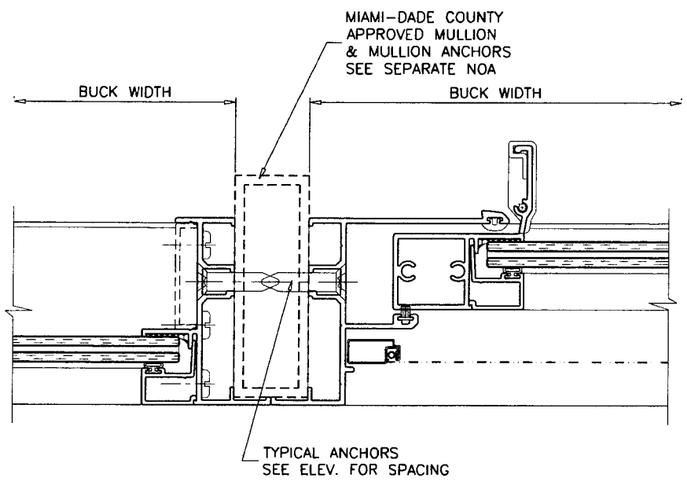

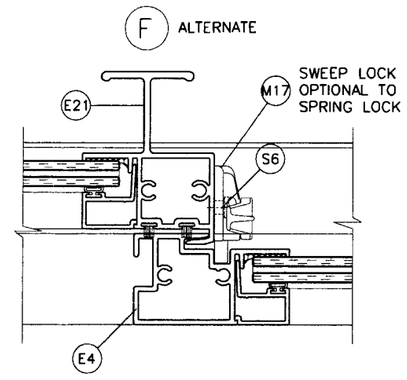

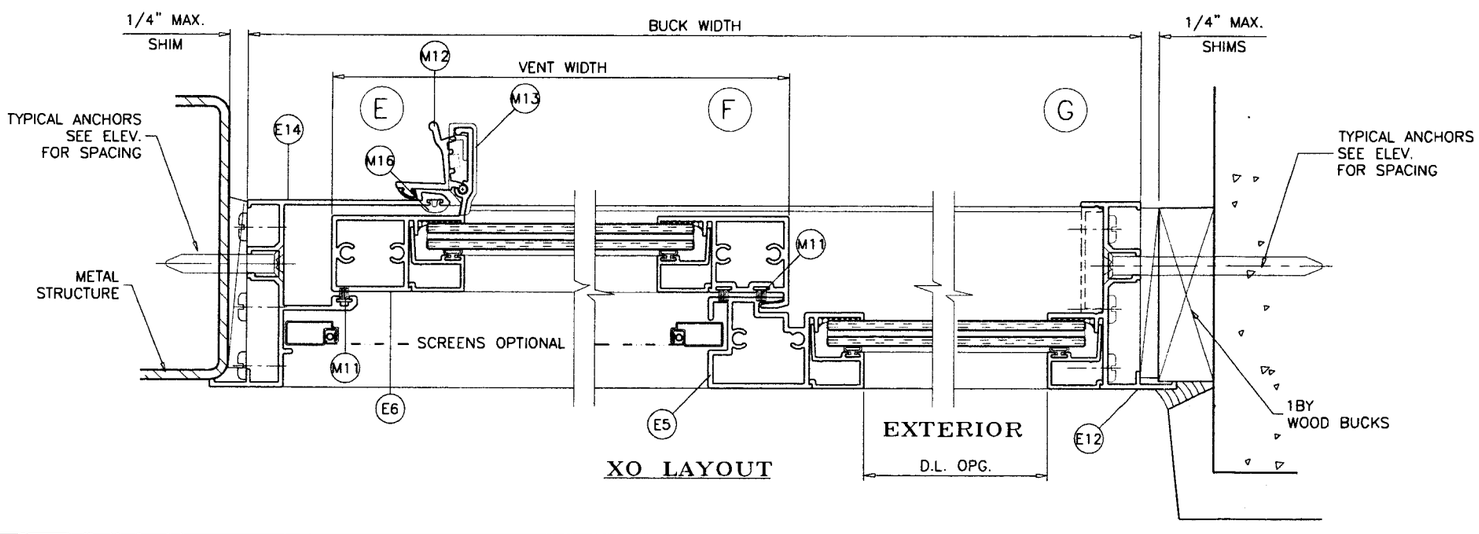

XO LAYOUT

FLANGE ADAPTOR FRAME

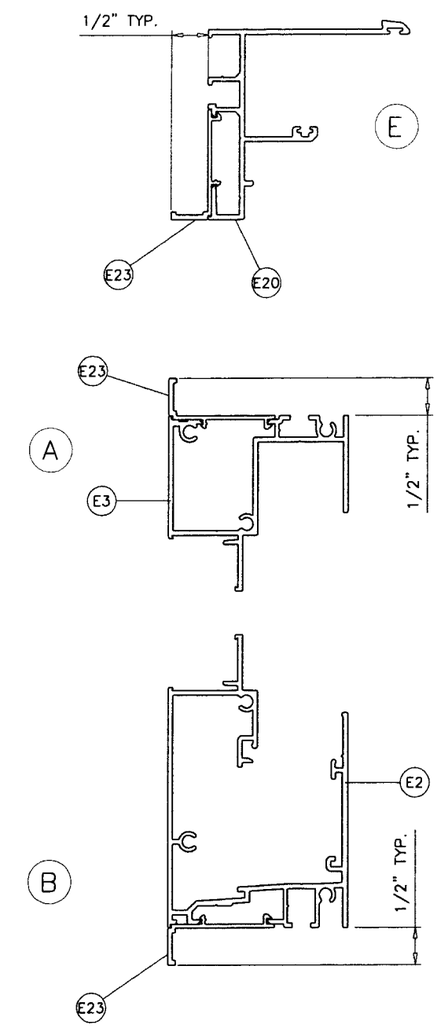

INTALLATION DETAILS SHOWN ON PAGES 5 AND 6 APPLY TO BOTH FLANGE FRAME AND FLANGE ADAPTOR FRAMES.

Engr: JAVAD AHMAD
CIVIL
FLA. PE # 70592
C.A.N. 3538

SEP 14 2010

Approved as complying with the Florida Building Code
Date 09/22/2010
NOA# 10-0510.12
Miami Dade Product Control Division
By

AL-FAROOQ CORPORATION
ENGINEERS & PRODUCT DEVELOPMENT
1235 S.W. 87 AVE
MIAMI, FLORIDA 33174
TEL. (305) 264-8100 FAX. (305) 262-6978

COMP-ANL\W10-03CGI

SERIES 120 SENTINEL ALUM HORIZ. SLIDING WDW. (S.M.I.)(L.M.I.)

CGI WINDOWS & DOORS
10100 N.W. 25TH STREET
MIAMI, FL. 33172
TEL. (305) 593-6590 FAX. (305) 593-6592

revisions:

no	date	by	description
A	08.04.10		REV. PER BCCO COMMENTS

date: 03-29-10
scale: 1/2" = 1"
dr. by:
chk. by:

drawing no.
W10-18

EQUAL LEG FRAME

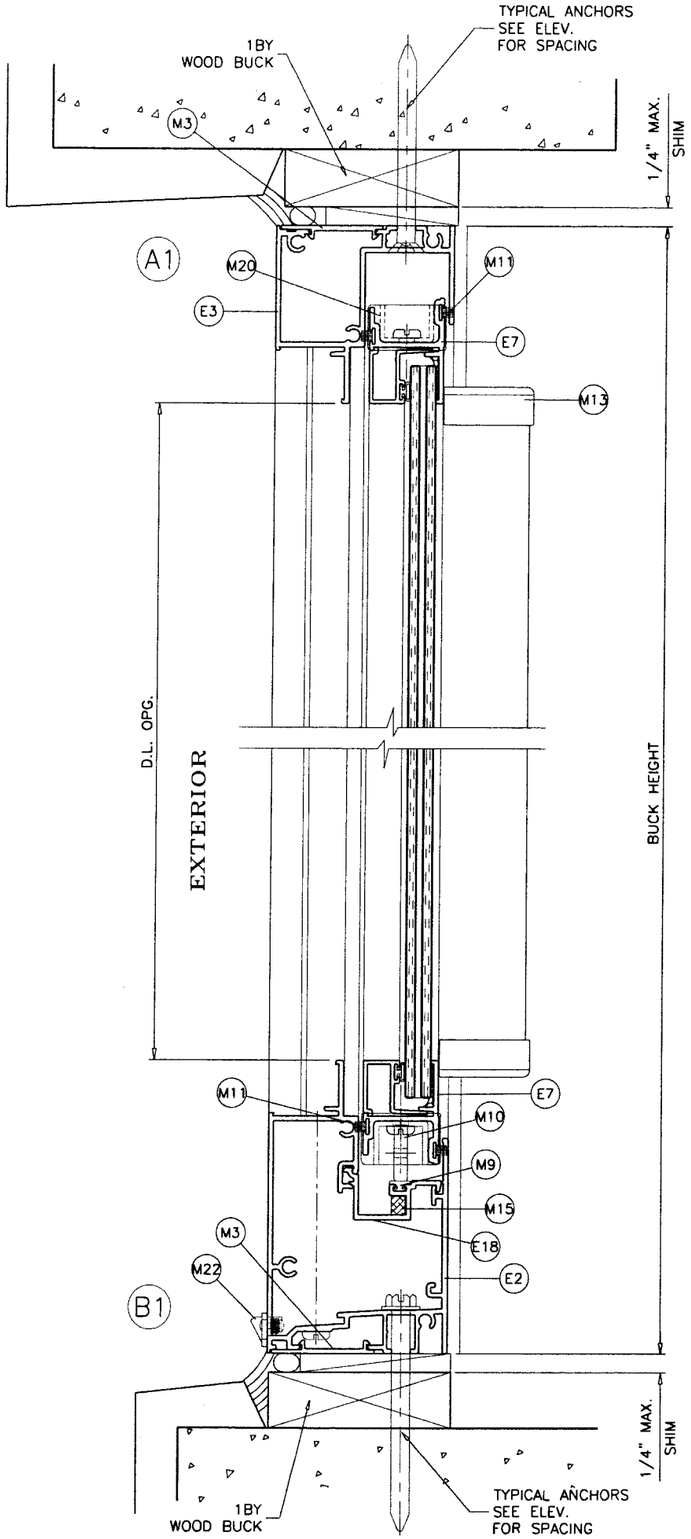

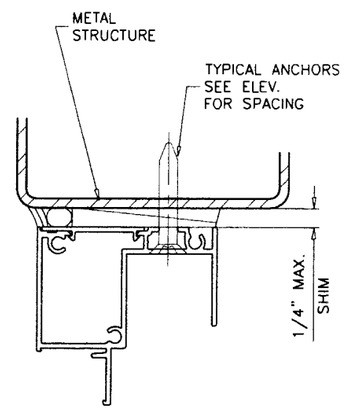

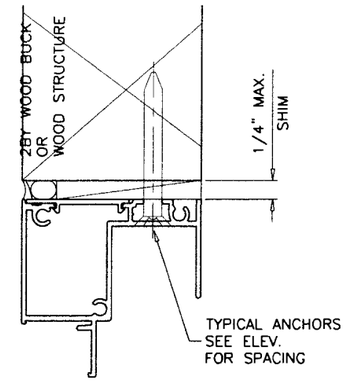

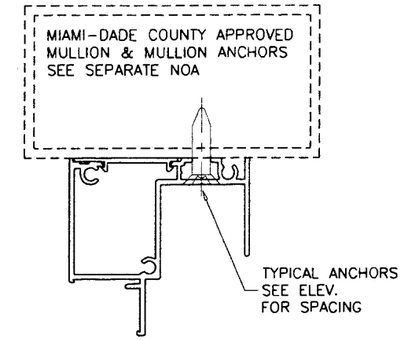

EQUAL LEG FRAME CAN BE INSTALLED DIRECTLY INTO WOOD, CONCRETE OR METAL STRUCTURES WITHOUT THE NEED OF A WOOD BUCK.

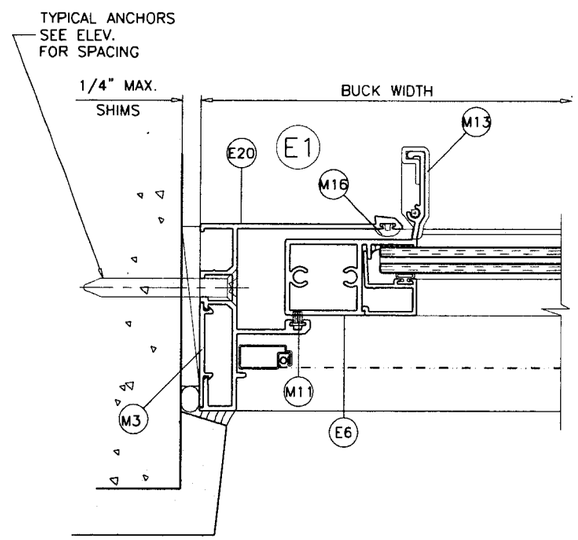

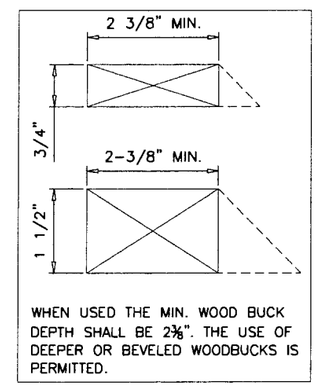

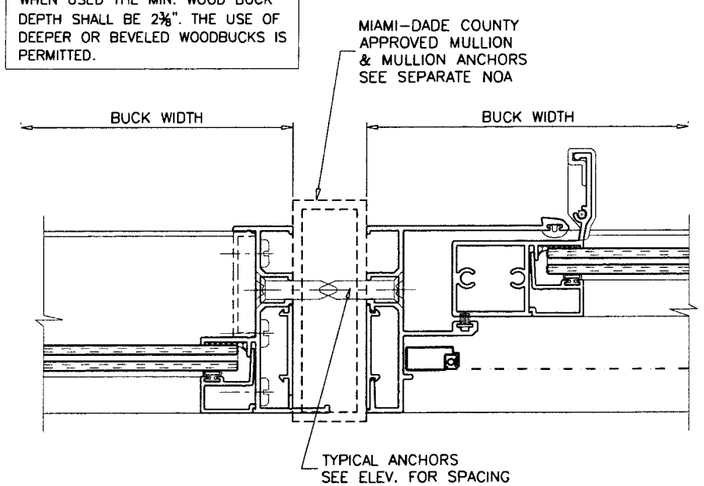

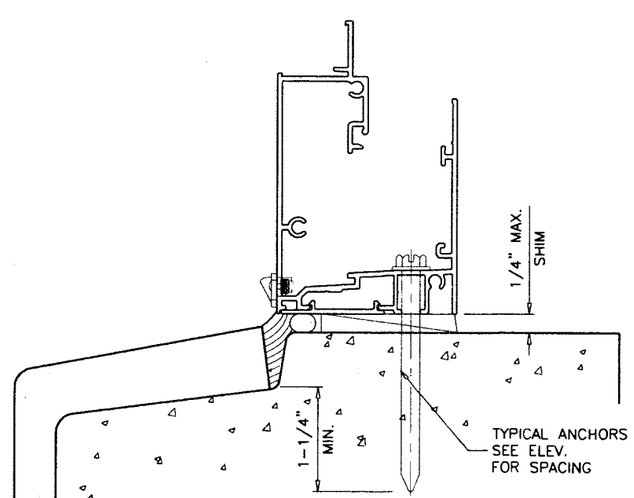

Engr: JAVAD AHMAD
CIVIL
FLA. PE # 70592
C.A.N. 3538

SEP 14 2010

Approved as complying with the Florida Building Code
Date 09/22/2010
NOA# 10-0510.12
Miami Dade Product Control Division
By

AL-FAROOQ CORPORATION
ENGINEERS & PRODUCT DEVELOPMENT
1235 S.W. 87 AVE
MIAMI, FLORIDA 33174
TEL. (305) 264-8100 FAX. (305) 262-6978

COMP-ANL\W10-03CGI

SERIES 120 SENTINEL ALUM HORIZ. SLIDING WDW. (S.M.I.)(L.M.I.)

CGI WINDOWS & DOORS
10100 N.W. 25TH STREET
MIAMI, FL. 33172
TEL. (305) 593-6590 FAX. (305) 593-6592

revisions:

no	date	by	description
A	08.04.10		REV. PER BCCO COMMENTS

date: 03-29-10
scale: 1/2" = 1"
dr. by:
chk. by:

drawing no.
W10-18

sheet 7 of 11

FIN FRAME

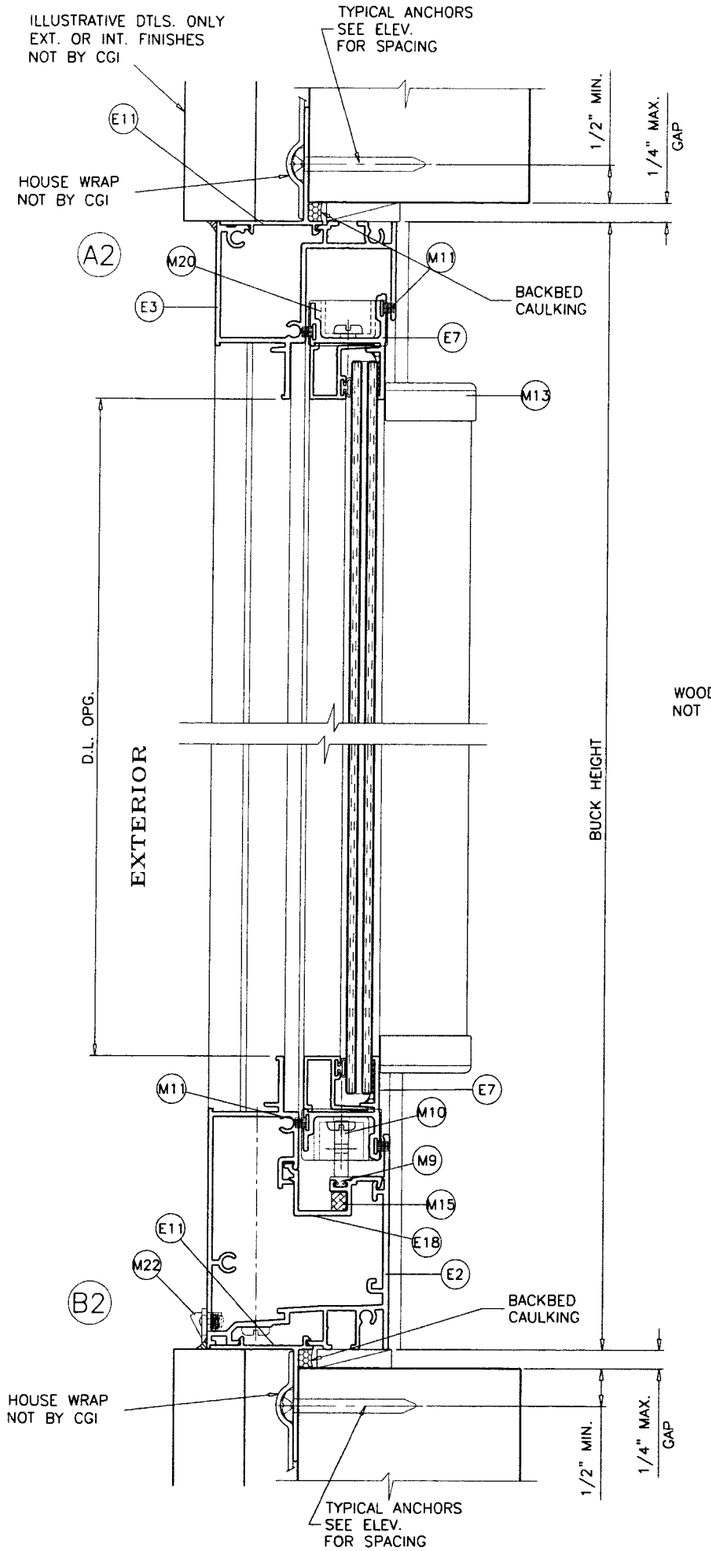

TYPICAL ANCHORS: SEE ELEV. FOR SPACING

#8 SMS (GRADE 2 CRS)

INTO 2BY WOOD BUCKS OR WOOD STRUCTURES
1-1/2" MIN. PENETRATION INTO WOOD

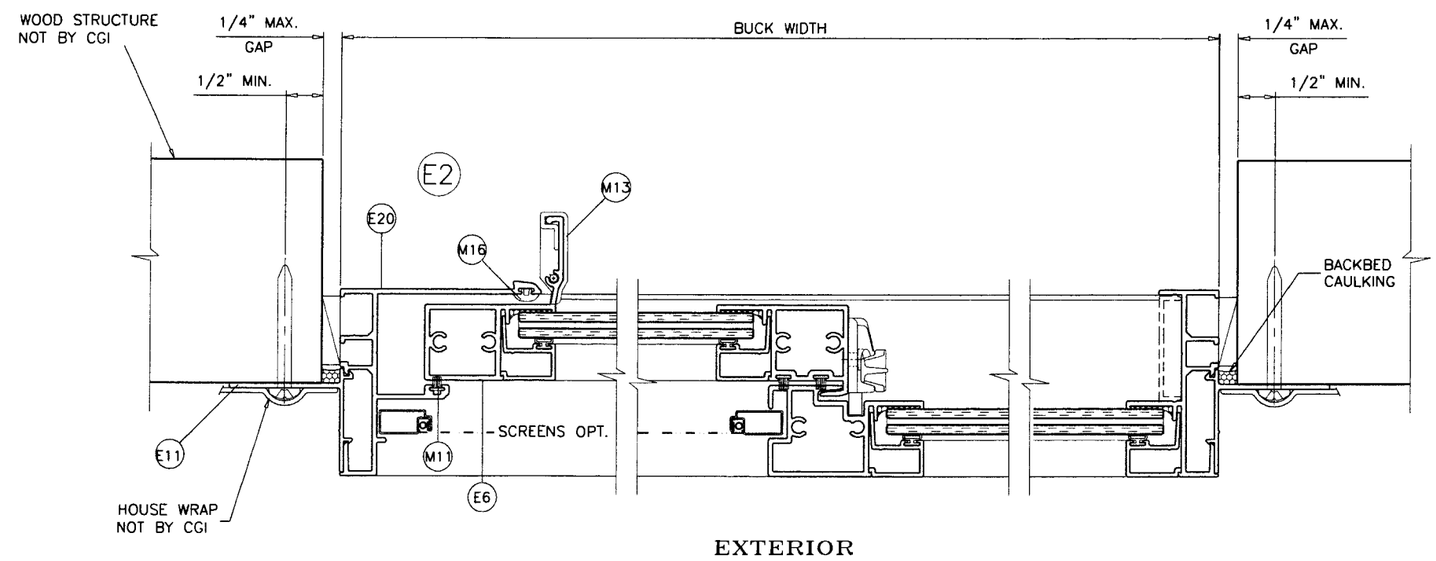

Engr: JAVAD AHMAD
CIVIL
FLA. PE # 70592
C.A.N. 3538

SEP 14 2010

Approved as complying with the Florida Building Code
Date 09/22/2010
NOA# 10-0510.12
Miami Dade Product Control Division
By

AL-FAROOQ CORPORATION
ENGINEERS & PRODUCT DEVELOPMENT
1235 S.W. 87 AVE
MIAMI, FLORIDA 33174
TEL. (305) 264-8100 FAX. (305) 262-6978
COMP-ANL\W10-03CGI

SERIES 120 SENTINEL ALUM HORIZ. SLIDING WDW. (S.M.I.)(L.M.I.)

CGI WINDOWS & DOORS
10100 N.W. 25TH STREET
MIAMI, FL. 33172
TEL. (305) 593-6590 FAX. (305) 593-6592

revisions:

no	date	by	description
A	08.04.10		NO CHANGE THIS SHEET

date: 03-29-10
scale: 1/2" = 1"
dr. by:
chk. by:

drawing no.
W10-18

ITEM	PART #	QUANTITY	DESCRIPTION	MATERIAL	MANF./SUPPLIER/REMARKS
E1	CGI-100	–	FRAME JAMB @ FIXED GLASS	6063-T6	CGI EXTRUDER
E2	CGI-113	–	FRAME SILL	6063-T6	CGI EXTRUDER
E3	CGI-102	–	FRAME HEAD	6063-T6	CGI EXTRUDER
E4	CGI-103	–	MEETING RAIL	6063-T6	CGI EXTRUDER
E5	CGI-104	–	LOCK RAIL	6063-T6	CGI EXTRUDER
E6	CGI-105	–	HANDLE RAIL	6063-T6	CGI EXTRUDER
E7	CGI-106	–	SASH RAIL	6063-T6	CGI EXTRUDER
E8	CGI-107	–	5/16" GLAZING BEAD	6063-T5	CGI EXTRUDER
E9	CGI-108	–	0.700" GLAZING BEAD	6063-T5	CGI EXTRUDER
E10	CGI-109	–	FRONT FLANGE ADAPTOR	6063-T6	CGI EXTRUDER
E11	CGI-110	–	NAIL FIN ADAPTOR	6063-T6	CGI EXTRUDER
E12	CGI-135	–	TF FRAME JAMB @ FIXED GLASS	6063-T6	CGI EXTRUDER
E13	CGI-136	–	TF FRAME HEAD	6063-T6	CGI EXTRUDER
E14	CGI-139	–	TF FRAME JAMB	6063-T6	CGI EXTRUDER
E15	CGI-140	–	1" MUNTIN	6063-T5	CGI EXTRUDER
E16	CGI-141	–	2.5" MULLION	6063-T6	CGI EXTRUDER
E17	CGI-605	–	SCREEN FRAME	6063-T5	CGI EXTRUDER
E18	CGI-114	–	SILL SNAP IN	6063-T6	CGI EXTRUDER
E19	CGI-115	–	SILL FILLER	6063-T6	CGI EXTRUDER
E20	CGI-116	–	FRAME JAMB	6063-T6	CGI EXTRUDER
E21	CGI-117	–	HD LOCK RAIL	6063-T6	CGI EXTRUDER
E22	CGI-138	–	TF FRAME SILL	6063-T6	CGI EXTRUDER
E23	CGI-109	–	FRONT FLANGE ADAPTOR	6063-T6	CGI EXTRUDER
M1	CGI-382V	–	GLAZING BULB VINYL (DUROMETER 75-80 SHORE A)	PVC	–
M2	CGI-111	–	SCREW COVER (OPTIONAL)	PVC	–
M3	CGI-112	3" @ ANCHORS	EQUAL LEG COVER/SHIM	PVC	–
M4	–	0.700" X 0.040" BEAD	GE1200 SILICONE	SILICONE	GE
M5	–	0.700" X 0.040" BEAD	DOW 995	SILICONE	DOW
M6	–	0.700" X 0.040" BEAD	DOW 899	SILICONE	DOW
M7	–	2/ LITE	SETTING BLOCK	EPDM	–
M8	–	–	PROTECTO WRAP WATERPROOFING OR EQUIV.	–	–
M9	684	–	ROLLER TRACK	PVC	–
M10	CGI-128	2 PER SASH	ROLLER HOUSING	NYLON	–
M11	W23201NG	–	PILE WITH CENTER FIN	WOOL	ULTRAFAB OR EQUIV.
M12	CGI-129	1 PER SASH	EGRESS LOCK	ALUM.	SULLIVAN
M13	CGI-131	2 PER SASH	HANDLE RAIL END CAP	NYLON	M&M
M14	391-N	1 PER SASH	ANTILIFT BLOCK	NYLON	M&M
M15	–	OPTIONAL	RETICULATED FOAM 30 PPI	–	–
M16	CGI-134	–	JAMB SPACER	PVC	PROTOTYPE OR EQUIV.
M17	A30730401-32	1 PER WD.	CAM LOCK	ZINC	TRUTH OR EQUIV.
M18	CGI-132	2PER WD. 2"	SASH STOP	PVC	PROTOTYPE
M19	CGI-111	@ FR. HEAD	SCREW COVER	PVC	PROTOTYPE
M20	CGI-125	2PER SASH	SASH CAM (B/T BALANCE)	NYLON	M&M
M22	–	VARIES	HI-FLO WEEP COVERS	PVC	AMESBURY OR EQUIV
S2	–	2 OR 3 PER CORNER	# 10 X 1 1/4" LG. PHL. PH. SMS. ST/ST. ASSEMBLY SCREW	–	–
S3	–	1 1/4" EMBED.	# 8 X 1 1/2" LG. PHL. PH. SMS. FIN ANCHOR SCREW	–	–
S4	–	4 PER WD.	# 8 X 1/2" PH. SMS. ST/ST BALANCE BRACKET SCREW	–	–
S5		2 PER WD.	# 8 X 1" LG. FH. SMS. ST/ST. SPIRAL B. ASSEMBLY	–	–
S6	–	–	# 6 X 1/2" LG. FH. SMS. @ CGI-133 & CAM LOCK	–	–
S8	–	4 @M. RAIL	# 10 X 4" LG. PHL. PH. SMS. ST/ST. ASSEMBLY MEETING RAIL	–	–
S9	–	2 PER ANTILIFT	# 10 X 5/8" LG. PHL. PH. SMS. ST/ST. ANTILIFT SCREW	–	–

Engr: JAVAD AHMAD
CIVIL
FLA. PE # 70592
C.A.N. 3538

SEP 14 2010

Approved as complying with the Florida Building Code
Date 09/22/2010
NOA# 10-0510.12
Miami Dade Product Control Division
By

AL-FAROOQ CORPORATION
ENGINEERS & PRODUCT DEVELOPMENT
1235 S.W. 87 AVE
MIAMI, FLORIDA 33174
TEL. (305) 264-8100 FAX. (305) 262-6978

COMP-ANL\W10-03CGI

SERIES 120 SENTINEL ALUM HORIZ. SLIDING WDW. (S.M.I.)(L.M.I.)

CGI WINDOWS & DOORS
10100 N.W. 25TH STREET
MIAMI, FL. 33172
TEL. (305) 593-6590 FAX. (305) 593-6592

revisions:

no	date	by	description
A	08.04.10		REV. PER BCCO COMMENTS

date: 03-29-10
scale: 1/2" = 1"
dr. by:
chk. by:

drawing no.
W10-18

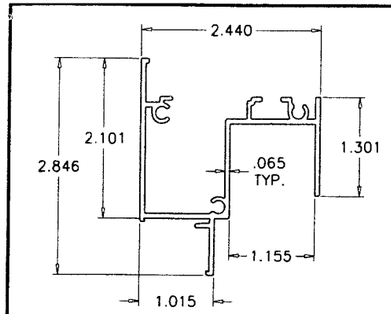

E13 FLANGE FRAME HEAD

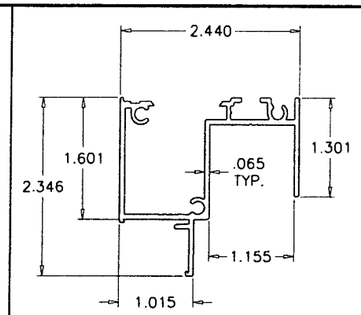

E3 FLUSH FRAME HEAD

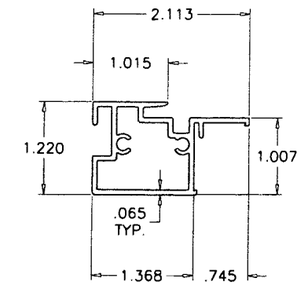

E4 MEETING RAIL

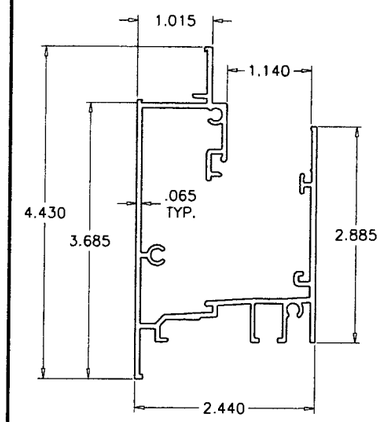

E22 FLANGE FRAME SILL

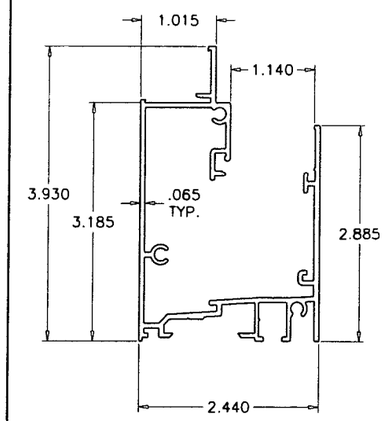

E2 FLUSH FRAME SILL

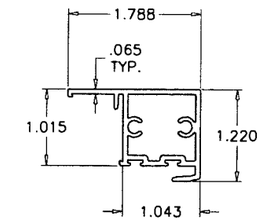

E5 LOCK RAIL

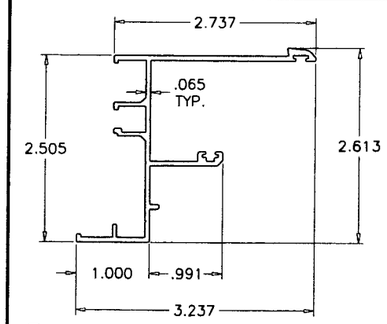

E14 FLANGE FRAME JAMB (MOVING)

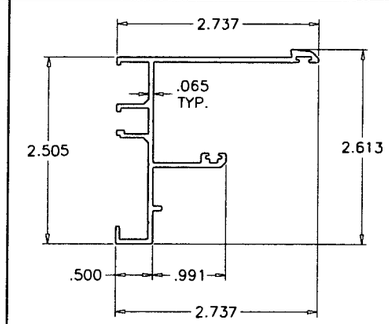

E20 FLUSH FRAME JAMB (MOVING)

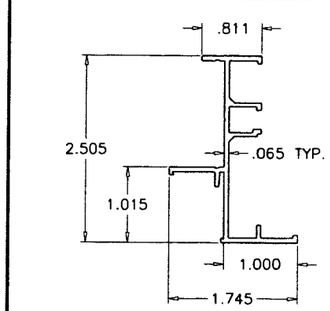

E12 FLANGE FRAME JAMB (FIXED)

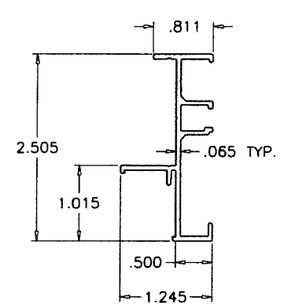

E1 FLUSH FRAME JAMB (FIXED)

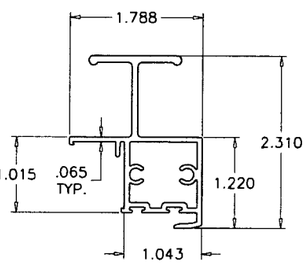

E21 ALT. LOCK RAIL

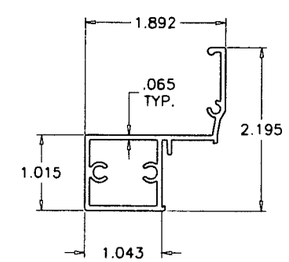

E6 HANDLE RAIL

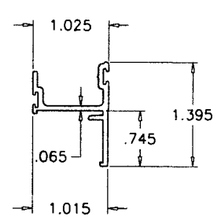

E7 SASH RAIL

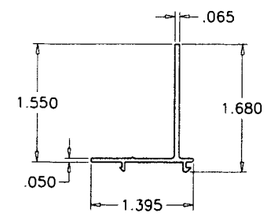

E11 NAIL FIN ADAPTER

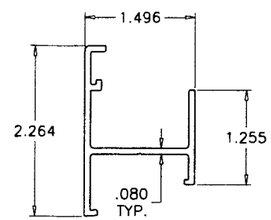

E19 SILL FILLER

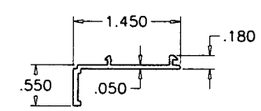

E23 FLANGE ADAPTOR

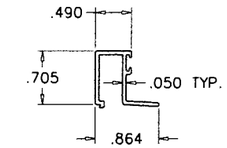

E8 5/16" GLAZING BEAD

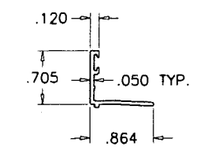

E9 .700" GLAZING BEAD

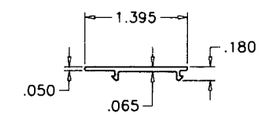

M3 FLUSH FRAME COVER

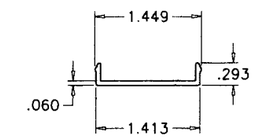

M2 SCREW COVER

Engr: JAVAD AHMAD
CIVIL
FLA. PE # 70592
C.A.N. 3538

SEP 14 2010

Approved as complying with the Florida Building Code
Date 09/22/2010
NOA# 10-0510.12
Miami Dade Product Control Division
By

AL-FAROOQ CORPORATION
ENGINEERS & PRODUCT DEVELOPMENT
1235 S.W. 87 AVE
MIAMI, FLORIDA 33174
TEL. (305) 264-8100 FAX. (305) 262-6978

COMP-ANL\W10-03CGI

SERIES 120 SENTINEL ALUM HORIZ. SLIDING WDW. (S.M.I.)(L.M.I.)

CGI WINDOWS & DOORS
10100 N.W. 25TH STREET
MIAMI, FL. 33172
TEL. (305) 593-6590 FAX. (305) 593-6592

revisions:

no	date	by	description
A	08.04.10		NO CHANGE THIS SHEET

date: 03-29-10
scale: 1/2" = 1"
dr. by:
chk. by:

drawing no.
W10-18

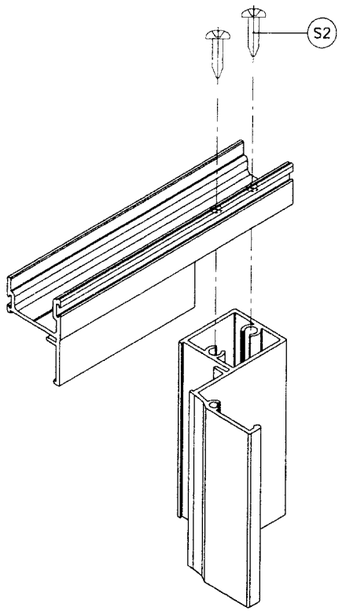

VENT TOP/BOTTOM CORNERS

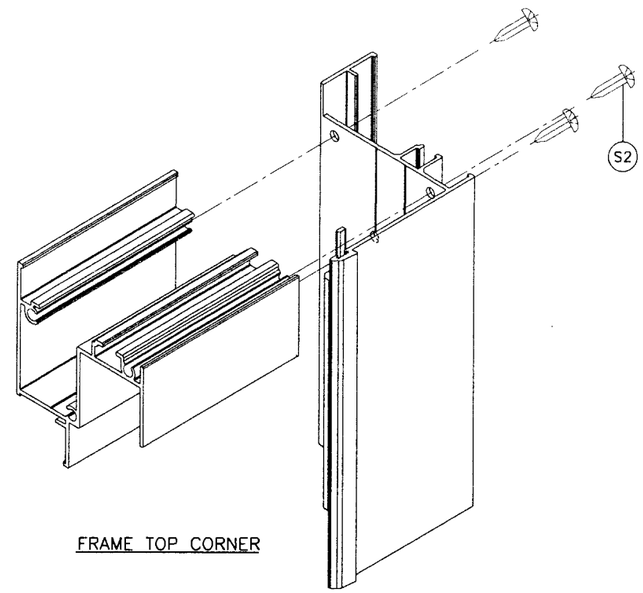

FRAME TOP CORNER

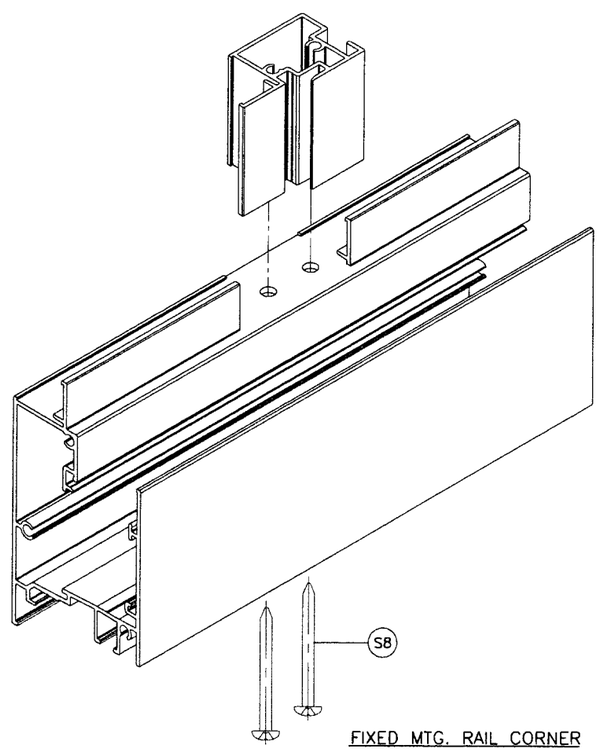

FIXED MTG. RAIL CORNER

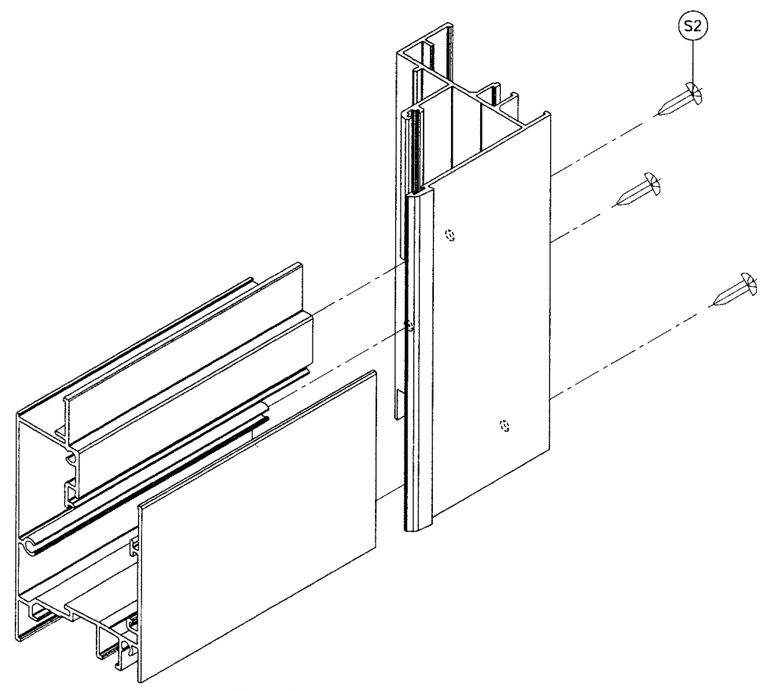

FRAME BOTTOM CORNER

Engr: JAVAD AHMAD
CIVIL
FLA. PE # 70592
C.A.N. 3538

SEP 14 2010

Approved as complying with the Florida Building Code
Date 09/22/2010
NOA# 10-0910.12
Miami Dade Product Control Division
By

AL-FAROOQ CORPORATION
ENGINEERS & PRODUCT DEVELOPMENT
1235 S.W. 87 AVE
MIAMI, FLORIDA 33174
TEL. (305) 264-8100 FAX. (305) 262-6978

COMP-ANL\W10-03CGI

SERIES 120 SENTINEL ALUM HORIZ. SLIDING WDW. (S.M.I.)(L.M.I.)

CGI WINDOWS & DOORS
10100 N.W. 25TH STREET
MIAMI, FL. 33172
TEL. (305) 593-6590 FAX. (305) 593-6592

revisions:

no	date	by	description
A	08.04.10		NO CHANGE THIS SHEET

date: 03-29-10
scale: 1/2" = 1"
dr. by:
chk. by:

drawing no.
W10-18