MIAMI-DADE COUNTY

BUILDING CODE COMPLIANCE OFFICE (BCCO)
PRODUCT CONTROL DIVISION

**MIAMI–DADE** COUNTY, FLORIDA
METRO–DADE FLAGLER BUILDING
140 WEST FLAGLER STREET, SUITE 1107
MIAMI, FLORIDA 33130–1563
(305) 375–2902 FAX (305) 372–6339
www.miamidade.gov/buildingcode

# NOTICE OF ACCEPTANCE (NOA)

**Pande Pane, LLC. dba SMI Systems**
**11305 NW 128 Street**
**Miami, FL 33178**

**SCOPE:**

This NOA is being issued under the applicable rules and regulations governing the use of construction materials. The documentation submitted has been reviewed by Miami–Dade County Product Control Division and accepted by the Board of Rules and Appeals (BORA) to be used in Miami–Dade County and other areas where allowed by the Authority Having Jurisdiction (AHJ).

This NOA shall not be valid after the expiration date stated below. The Miami–Dade County Product Control Division (In Miami–Dade County) and/or the AHJ (in areas other than Miami–Dade County) reserve the right to have this product or material tested for quality assurance purposes. If this product or material fails to perform in the accepted manner, the manufacturer will incur the expense of such testing and the AHJ may immediately revoke, modify, or suspend the use of such product or material within their jurisdiction. BORA reserves the right to revoke this acceptance, if it is determined by Miami–Dade County Product Control Division that this product or material fails to meet the requirements of the applicable building code.

This product is approved as described herein, and has been designed to comply with the Florida Building Code, including the High Velocity Hurricane Zone.

**DESCRIPTION: Series "K2LM" 10'0" Outswing Glazed Aluminum Entrance Door – L.M.I.**

**APPROVAL DOCUMENT:** Drawing No. **W04–91**, titled "Series K2LM Alum. Out-Swing Entrance Door", sheets 1 through 11 of 11, dated 10/25/04 with revision **"B"** dated 05/05/10, prepared by Al–Farooq Corporation, signed and sealed by Javad Ahmad, P. E., bearing the Miami–Dade County Product Control Renewal stamp with the Notice of Acceptance number and Expiration date by the Miami–Dade County Product Control Division.

**MISSILE IMPACT RATING: Large and Small Missile Impact Resistant.**

**LABELING:** Each unit shall bear a permanent label with the manufacturer's name or logo, city, state and following statement: "Miami–Dade County Product Control Approved", unless otherwise noted herein.

**REVISION** of this NOA shall be considered after a renewal application has been filed and there has been no change in the applicable building code negatively affecting the performance of this product.

**TERMINATION** of this NOA will occur after the expiration date or if there has been a revision or change in the materials, use, and/or manufacture of the product or process. Misuse of this NOA as an endorsement of any product, for sales, advertising or any other purposes shall automatically terminate this NOA. Failure to comply with any section of this NOA shall be cause for termination and removal of NOA.

**ADVERTISEMENT:** The NOA number preceded by the words Miami–Dade County, Florida, and followed by the expiration date may be displayed in advertising literature. If any portion of the NOA is displayed, then it shall be done in its entirety.

**INSPECTION:** A copy of this entire NOA shall be provided to the user by the manufacturer or its distributors and shall be available for inspection at the job site at the request of the Building Official.

This NOA **renews NOA No. 05–0301.04** and consists of this page 1, evidence pages E–1 and E–2, as well as approval document mentioned above.

The submitted documentation was reviewed by **Manuel Perez, P. E.**

MIAMI-DADE COUNTY APPROVED

**NOA No. 10–0511.02**
**Expiration Date: May 12, 2011**
**Approval Date: June 30, 2010**

**Pande Pane, LLC dba SMI Systems**

## NOTICE OF ACCEPTANCE: EVIDENCE SUBMITTED

**A. DRAWINGS**

1. Manufacturer's die drawings and sections.
2. Drawing No **W04–91**, titled "Series K2LM Alum. Out-Swing Entrance Door", sheets 1 through 11 of 11, dated 10/25/04 with revision **"B"** dated 05/05/10, prepared by Al–Farooq Corporation, signed and sealed by Javad Ahmad, P. E.

**B. TESTS**

1. Test reports on: 1) Air Infiltration Test, per FBC, TAS 202–94
   2) Uniform Static Air Pressure Test, Loading per FBC TAS 202–94
   3) Water Resistance Test, per FBC, TAS 202–94
   4) Large Missile Impact Test per FBC, TAS 201–94
   5) Cyclic Wind Pressure Loading per FBC, TAS 203–94
   6) Forced Entry Test, per FBC 2411 3.2.1, TAS 202–94

   along with marked–up drawings and installation diagram of a aluminum outswing door, prepared by Fenestration Testing Laboratory, Inc., Test Reports No. **FTL–4267**, **FTL–4238**, **FTL–4257** and **FTL–4276**, all dated 06/18/04, 06/30/04, 08/12/04 and 08/13/04 respectively, all signed and sealed by Edmundo Largaespada, P. E.

   ***(Submitted under previous NOA No.05–0301.04)***

**C. CALCULATIONS**

1. Anchor verification calculations and structural analysis, complying with FBC–2007, prepared by Al–Farooq Corporation, dated 04/29/10, signed and sealed by Javad Ahmad, P. E.

   **Complies with ASTM E1300–02/ 04**

**D. QUALITY ASSURANCE**

1. Miami–Dade Building Code Compliance Office (BCCO).

**E. MATERIAL CERTIFICATIONS**

1. Notice of Acceptance No. **06–0216.06** issued to Solutia Inc. for their "**Saflex IIIG Clear or colored interlayer**" dated 05/04/06, expiring on 05/21/11.
2. Notice of Acceptance No. **10–0331.02** issued to Cytec Industries, Inc. for their "**Uvekol S Laminated Glass Interlayer**", dated 05/05/10, expiring on 02/08/14.

**Manuel Perez, P.E.**
**Product Control Examiner**
**NOA No. 10–0511.02**
**Expiration Date: May 12, 2011**
**Approval Date: June 30, 2010**

## F. STATEMENTS

1. Statement letter of conformance, no financial interest and compliance with the FBC 2007, dated April 30, 2010, signed and sealed by Javad Ahmad, P. E.
2. Asset purchase agreement dated October 14, 2005, signed by Mr. Frank H. Messa and Mr. Joseph C. Kempe.
3. Laboratory compliance letters for Test Reports No.'s **FTL–4267**, **FTL–4238**, **FTL–4257** and **FTL–4276**, issued by Fenestration Testing Laboratory, Inc., dated 06/18/04, 06/30/04, 08/12/04 and 08/13/04 respectively, all signed and sealed by Edmundo Largaespada, P. E.
   ***(Submitted under previous NOA No. 05–0301.04)***
4. Asset purchase agreement dated July 24, 2002, signed by Mr. James R. Pande, Officer and Mr. Jorge L. Cruz, President.
5. Testing agreement letter, dated 04/28/2010 between Fenestration Testing Laboratory, Inc. (FTL) and Pande Pane, LLC dBa SMI Systems, issued by FTL.
6. One year conditional approval, subjected to successful verification test.

## G. OTHERS

1. Notice of Acceptance No. **05–0301.04**, issued to Smith Mountain Impact Systems for their Series "**K2LM Aluminum Out–Swing Entrance Door**", approved on 05/12/05 and expiring on 05/12/10.
2. One year conditional approval, subjected to successful verification test, the final approval will be balanced to a total of 5 years.

**Manuel Perez, P.E.**
**Product Control Examiner**
**NOA No. 10–0511.02**
**Expiration Date: May 12, 2011**
**Approval Date: June 30, 2010**

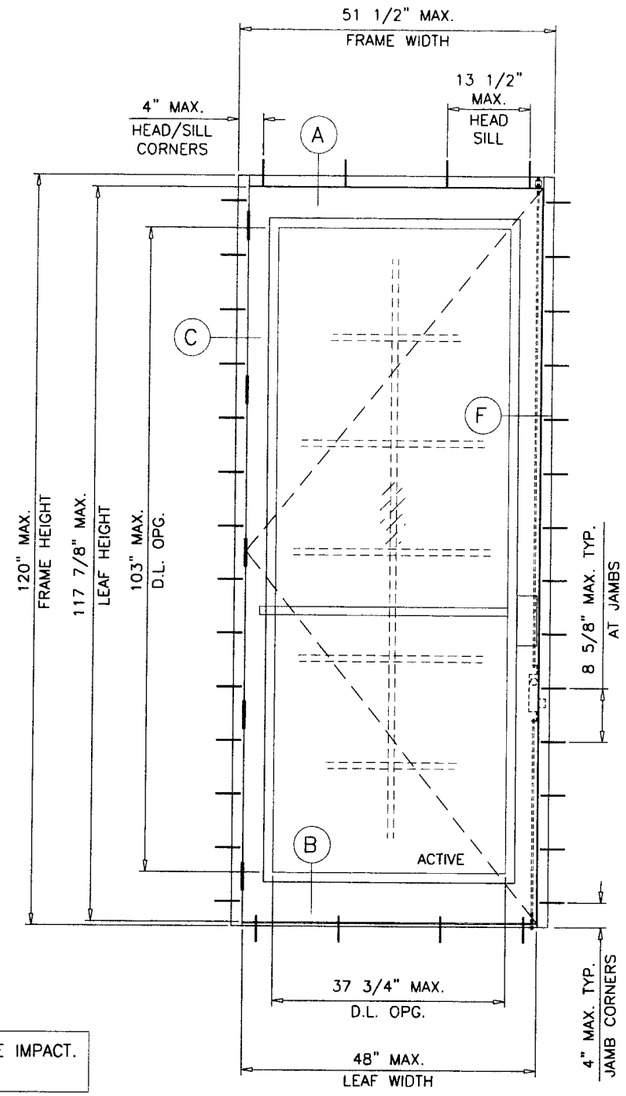


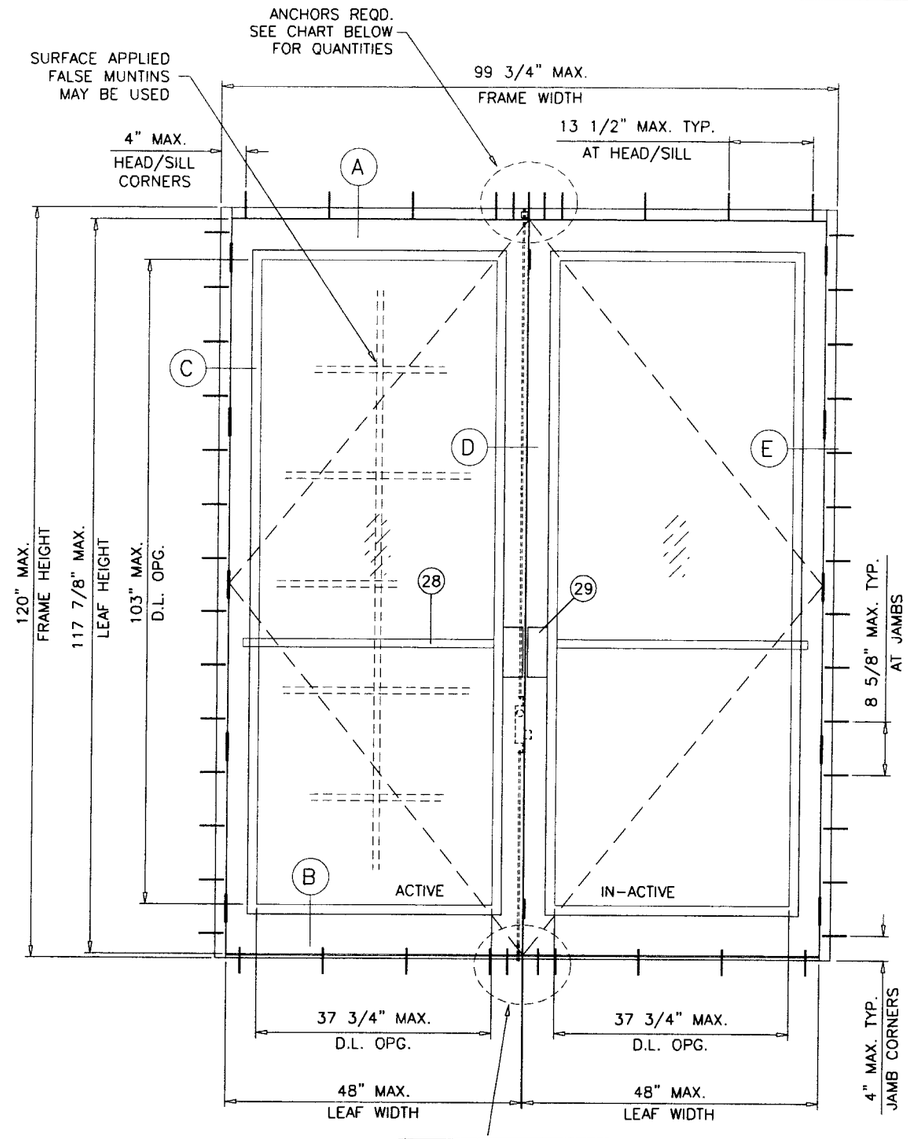


THESE DOORS ARE RATED FOR LARGE & SMALL MISSILE IMPACT. SHUTTERS ARE NOT REQUIRED.

## SERIES K2LM ALUMINUM OUT-SWING DOOR

USE BUMPER THRESHOLD (#5A+5B) WHEN WATER INFILTRATION REQUIREMENTS ARE NOT APPLICABLE.

USE HIGH-RISE THRESHOLD COVER (#5A+5C) WHEN WATER INFILTRATION REQUIREMENTS MUST BE MET.

SEE CHARTS ON SHEET 2 FOR DESIGN LOAD CAPACITY OF SINGLE (X) AND DOUBLE (XX) LEAF DOORS W/O TRANSOMS.

SEE CHARTS ON SHEET 3 FOR DESIGN LOAD CAPACITY OF SINGLE (O/X) OR DOUBLE (O/XX) LEAF DOORS WITH TRANSOMS.

SEE CHARTS ON SHEETS 5 & 6 FOR DESIGN LOAD CAPACITY OF DOOR MULLION.

USE LOWER VALUES OF DOOR MULLION CHARTS (SHEETS 5 & 6) OR DOOR CAPACITY CHARTS (SHEETS 2 & 3).

## TYPICAL ELEVATIONS

NOTES:

THIS PRODUCT HAS BEEN DESIGNED AND TESTED TO COMPLY WITH THE REQUIREMENTS OF THE FLORIDA BUILDING CODE 2007 EDITION INCLUDING HIGH VELOCITY HURRICANE ZONE (HVHZ).

WOOD BUCKS BY OTHERS, MUST BE ANCHORED PROPERLY TO TRANSFER LOADS TO THE STRUCTURE.

ANCHORS SHALL BE AS LISTED, SPACED AS SHOWN ON DETAILS, ANCHORS EMBEDMENT TO BASE MATERIAL SHALL BE BEYOND WALL DRESSING OR STUCCO.

ANCHORING OR LOADING CONDITIONS NOT SHOWN IN THESE DETAILS ARE NOT PART OF THIS APPROVAL.

A LOAD DURATION INCREASE IS USED IN DESIGN OF ANCHORS INTO WOOD ONLY.

MATERIALS INCLUDING BUT NOT LIMITED TO STEEL/METAL SCREWS, THAT COME INTO CONTACT WITH OTHER DISSIMILAR MATERIALS SHALL MEET THE REQUIREMENTS OF 2007 FLORIDA BLDG. CODE SECTION 2003.8.4.

| TOTAL NO. OF ANCHORS AT MTG. STILE ENDS | |
|---|---|
| SUBSTRATE | FOR FRAME HT. UPTO 120 IN. |
| WOOD | 9 |
| CONCRETE | 3 |
| METAL | 3 |

LAMINATED GLASS
LARGE MISSILE IMPACT

Engr. JAVAD AHMAD
CIVIL
FLA. PE # 70592
C.A.N. 3538

JUN 09 2010

PRODUCT RENEWED
as complying with the Florida
Building Code
Acceptance No 10-0511.02
Expiration Date 05/12/2011
By Manuel Perez
Miami-Dade Product Control
Division


AL-FAROOQ CORPORATION
ENGINEERS & PRODUCT DEVELOPMENT
1235 S.W. 87 AVE
MIAMI, FLORIDA 33174
TEL. (305) 264-8100 FAX. (305) 262-6978


COMP-ANL\W04-91SM

SERIES K2LM ALUM OUT-SWING ENTRANCE DOOR

Pande Pane LLC dba. SMI Systems
11305 N.W. 128 STREET
MEDLEY, FL. 33178
TEL. (305) 888-6288 FAX. (305) 888-6289

revisions:

| no | date | by | description |
|---|---|---|---|
| A | 03.30.05 | | REV. PER BCCO COMMENTS |
| B | 05.05.10 | | UPDATED TO 2007 FBC |

date: 10-25-04
scale: 1/2"=1'-0"
dr. by: HAMID
chk. by:

drawing no.
W04-91

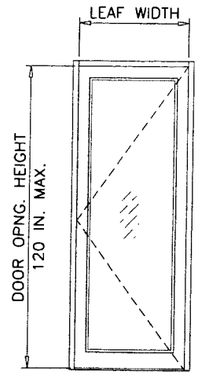


( X )

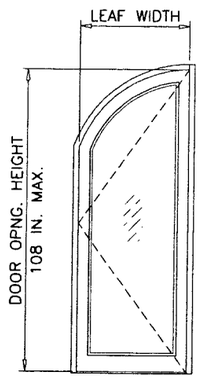


( X )

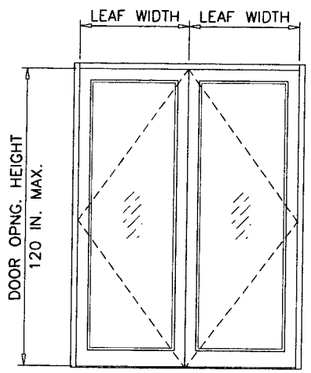


( XX )

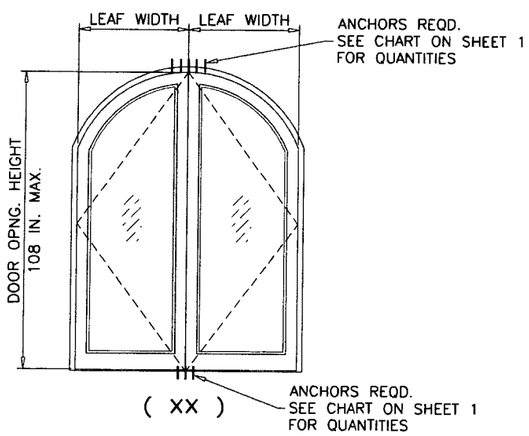


( XX )

| SINGLE OR DOUBLE ENTRANCE DOORS W/O TRANSOM | | | |
|---|---|---|---|
| NOMINAL DIMS. | | DESIGN LOAD CAPACITY-PSF | |
| OPNG. HEIGHT INCHES | LEAF WIDTH INCHES | EXT.(+) | INT.(-) |
| 80 | 30 | 100.0 | 120.0 |
| | 36 | 100.0 | 120.0 |
| | 42 | 100.0 | 120.0 |
| | 48 | 100.0 | 120.0 |
| 84 | 30 | 100.0 | 120.0 |
| | 36 | 100.0 | 120.0 |
| | 42 | 100.0 | 120.0 |
| | 48 | 100.0 | 120.0 |
| 96 | 30 | 100.0 | 120.0 |
| | 36 | 100.0 | 120.0 |
| | 42 | 100.0 | 120.0 |
| | 48 | 100.0 | 120.0 |
| 108 | 30 | 100.0 | 120.0 |
| | 36 | 100.0 | 120.0 |
| | 42 | 100.0 | 120.0 |
| | 48 | 100.0 | 120.0 |
| 120 | 30 | 100.0 | 100.0 |
| | 36 | 100.0 | 100.0 |
| | 42 | 100.0 | 100.0 |
| | 48 | 100.0 | 100.0 |

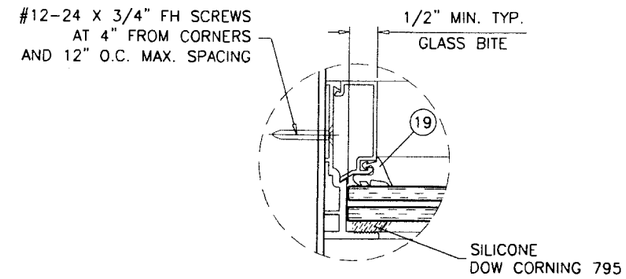


TRANSOM JAMB

NOTE:
GLASS CAPACITIES ON THIS SHEET ARE BASED ON ASTM E1300-04 (3 SEC. GUSTS) AND FLORIDA BUILDING COMMISSION DECLARATORY STATEMENT DCA05-DEC-219

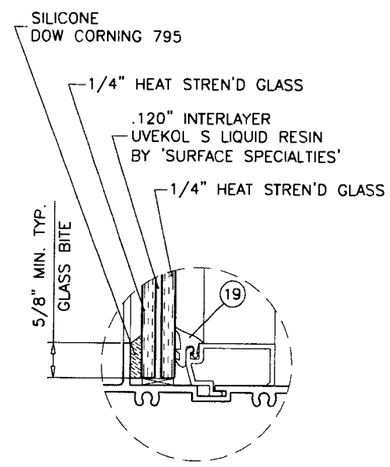


GLASS TYPE 'A'

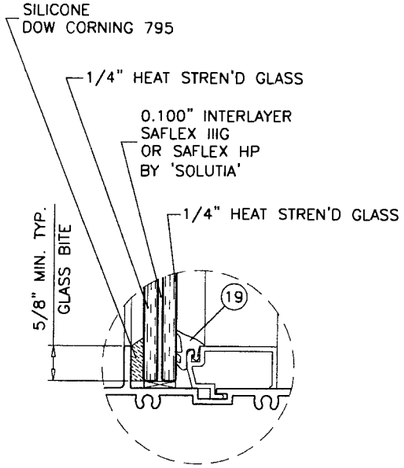


GLASS TYPE 'B'

GLAZING DETAILS TRANSOM

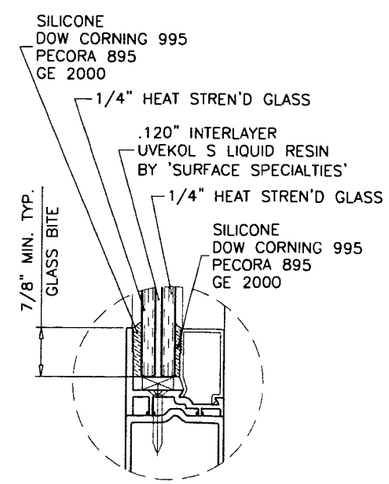


GLASS TYPE 'A'

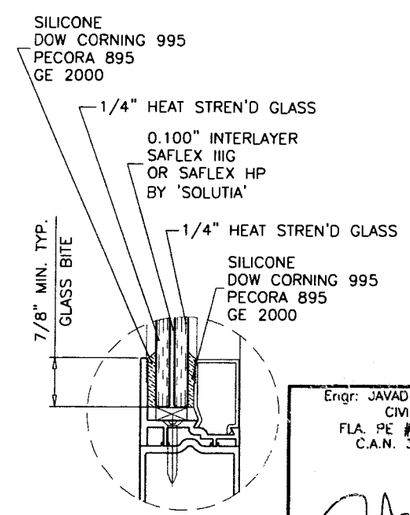


GLASS TYPE 'B'

GLAZING DETAILS DOOR LEAF

Engr: JAVAD AHMAD
CIVIL
FLA. PE # 70592
C.A.N. 3638

JUN 0 9 2010

PRODUCT RENEWED
as complying with the Florida Building Code
Acceptance No 10-0511.02
Expiration Date 05/12/2011
By Manuel Perez
Miami Dade Product Control Division


AL-FAROOQ CORPORATION
ENGINEERS & PRODUCT DEVELOPMENT
1235 S.W. 87 AVE
MIAMI, FLORIDA 33174
TEL. (305) 264-8100 FAX. (305) 262-6978
COMP-ANL\W04-91SM


SERIES K2LM ALUM OUT-SWING ENTRANCE DOOR

Pande Pane LLC dba. SMI Systems
11305 N.W. 128 STREET
MEDLEY, FL. 33178
TEL. (305) 888-6288 FAX. (305) 888-6289

revisions:

| no | date | by | description |
|---|---|---|---|
| A | 03.30.05 | | NO CHANGE THIS SHEET |
| B | 05.05.10 | | UPDATED TO 2007 FBC |

date: 10-25-04
scale: 1/2"=1'-0"
dr. by: HAMID
chk. by:

drawing no.
W04-91

| SINGLE ENTRANCE DOORS WITH TRANSOM | | | | |
|---|---|---|---|---|
| DESIGN LOAD CAPACITY | | | | |
| NOMINAL DIMS. | | | WITHOUT REINF. | |
| OPNG. WIDTH INCHES | DOOR HEIGHT INCHES | TRANSOM HEIGHT INCHES | EXT. (+) | INT. (−) |
| 48 MAX. | 108 MAX. | 60 | 100.0 | 120.0 |

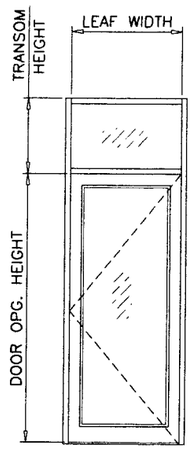


( O/X )

| DOUBLE ENTRANCE DOORS WITH TRANSOM | | | | | | |
|---|---|---|---|---|---|---|
| DESIGN LOAD CAPACITY | | | | | | |
| NOMINAL DIMS. | | | WITHOUT REINF. | | WITH REINF. | |
| OPNG. WIDTH INCHES | DOOR HEIGHT INCHES | TRANSOM HEIGHT INCHES | EXT. (+) | INT. (−) | EXT. (+) | INT. (−) |
| 60 | 80 | 24 | 100.0 | 120.0 | 100.0 | 120.0 |
| | | 30 | 100.0 | 120.0 | 100.0 | 120.0 |
| | | 36 | 100.0 | 120.0 | 100.0 | 120.0 |
| | | 42 | 100.0 | 120.0 | 100.0 | 120.0 |
| | | 48 | 100.0 | 120.0 | 100.0 | 120.0 |
| | | 54 | 100.0 | 113.7 | 100.0 | 120.0 |
| | | 60 | 100.0 | 108.0 | 100.0 | 120.0 |
| 72 | | 24 | 100.0 | 104.3 | 100.0 | 120.0 |
| | | 30 | 97.6 | 97.6 | 100.0 | 120.0 |
| | | 36 | 91.5 | 91.5 | 100.0 | 120.0 |
| | | 42 | 86.0 | 86.0 | 100.0 | 120.0 |
| | | 48 | 81.0 | 81.0 | 100.0 | 120.0 |
| | | 54 | 76.5 | 76.5 | 100.0 | 120.0 |
| 84 | | 24 | 75.4 | 75.4 | 100.0 | 120.0 |
| | | 30 | 70.2 | 70.2 | 100.0 | 120.0 |
| | | 36 | 65.6 | 65.6 | 100.0 | 120.0 |
| | | 42 | 61.4 | 61.4 | 100.0 | 120.0 |
| | | 48 | 57.6 | 57.6 | 100.0 | 120.0 |
| 96" | | 24 | 56.7 | 56.7 | 100.0 | 120.0 |
| | | 30 | 52.5 | 52.5 | 100.0 | 120.0 |
| | | 36 | 48.8 | 48.8 | 100.0 | 120.0 |
| | | 42 | 45.4 | 45.4 | 100.0 | 120.0 |
| 60 | 84 | 24 | 100.0 | 120.0 | 100.0 | 120.0 |
| | | 30 | 100.0 | 120.0 | 100.0 | 120.0 |
| | | 36 | 100.0 | 120.0 | 100.0 | 120.0 |
| | | 42 | 100.0 | 120.0 | 100.0 | 120.0 |
| | | 48 | 100.0 | 116.3 | 100.0 | 120.0 |
| | | 54 | 100.0 | 110.4 | 100.0 | 120.0 |
| | | 60 | 100.0 | 105.0 | 100.0 | 120.0 |
| 72 | | 24 | 100.0 | 100.5 | 100.0 | 120.0 |
| | | 30 | 94.1 | 94.1 | 100.0 | 120.0 |
| | | 36 | 88.4 | 88.4 | 100.0 | 120.0 |
| | | 42 | 83.3 | 83.3 | 100.0 | 120.0 |
| | | 48 | 78.6 | 78.6 | 100.0 | 120.0 |
| | | 54 | 74.3 | 74.3 | 100.0 | 120.0 |
| 84 | | 24 | 72.6 | 72.6 | 100.0 | 120.0 |
| | | 30 | 67.8 | 67.8 | 100.0 | 120.0 |
| | | 36 | 63.4 | 63.4 | 100.0 | 120.0 |
| | | 42 | 59.4 | 59.4 | 100.0 | 120.0 |
| | | 48 | 55.8 | 55.8 | 100.0 | 120.0 |
| 96" | | 24 | 54.6 | 54.6 | 100.0 | 120.0 |
| | | 30 | 50.7 | 50.7 | 100.0 | 120.0 |
| | | 36 | 47.1 | 47.1 | 100.0 | 120.0 |
| | | 42 | 43.9 | 43.9 | 100.0 | 120.0 |

| DOUBLE ENTRANCE DOORS WITH TRANSOM | | | | | | |
|---|---|---|---|---|---|---|
| DESIGN LOAD CAPACITY | | | | | | |
| NOMINAL DIMS. | | | WITHOUT REINF. | | WITH REINF. | |
| OPNG. WIDTH INCHES | DOOR HEIGHT INCHES | TRANSOM HEIGHT INCHES | EXT. (+) | INT. (−) | EXT. (+) | INT. (−) |
| 60 | 96 | 24 | 100.0 | 120.0 | 100.0 | 120.0 |
| | | 30 | 100.0 | 120.0 | 100.0 | 120.0 |
| | | 36 | 100.0 | 118.2 | 100.0 | 120.0 |
| | | 42 | 100.0 | 112.1 | 100.0 | 120.0 |
| | | 48 | 100.0 | 106.6 | 100.0 | 120.0 |
| 72 | | 24 | 90.4 | 90.4 | 100.0 | 120.0 |
| | | 30 | 85.2 | 85.2 | 100.0 | 120.0 |
| | | 36 | 80.4 | 80.4 | 100.0 | 120.0 |
| | | 42 | 76.0 | 76.0 | 100.0 | 120.0 |
| | | 48 | 72.0 | 72.0 | 100.0 | 120.0 |
| 84 | | 24 | 65.4 | 65.4 | 100.0 | 120.0 |
| | | 30 | 61.3 | 61.3 | 100.0 | 120.0 |
| | | 36 | 57.6 | 57.6 | 100.0 | 120.0 |
| | | 42 | 54.2 | 54.2 | 100.0 | 120.0 |
| | | 48 | 51.2 | 51.2 | 100.0 | 120.0 |
| 96" | | 24 | 49.1 | 49.1 | 100.0 | 120.0 |
| | | 30 | 45.8 | 45.8 | 100.0 | 120.0 |
| | | 36 | 42.8 | 42.8 | 100.0 | 120.0 |
| | | 42 | 40.1 | 40.1 | 100.0 | 120.0 |
| 60 | 108 | 24 | 100.0 | 120.0 | 100.0 | 120.0 |
| | | 30 | 100.0 | 113.9 | 100.0 | 120.0 |
| | | 36 | 100.0 | 108.3 | 100.0 | 120.0 |
| 72 | | 24 | 82.2 | 82.2 | 100.0 | 120.0 |
| | | 30 | 77.8 | 77.8 | 100.0 | 120.0 |
| | | 36 | 73.7 | 73.7 | 100.0 | 120.0 |
| 84 | | 24 | 59.4 | 59.4 | 100.0 | 120.0 |
| | | 30 | 56.0 | 56.0 | 100.0 | 120.0 |
| | | 36 | 52.8 | 52.8 | 100.0 | 120.0 |
| 96" | | 24 | 44.7 | 44.7 | 100.0 | 120.0 |
| | | 30 | 41.8 | 41.8 | 100.0 | 120.0 |
| | | 36 | 39.3 | 39.3 | 100.0 | 120.0 |

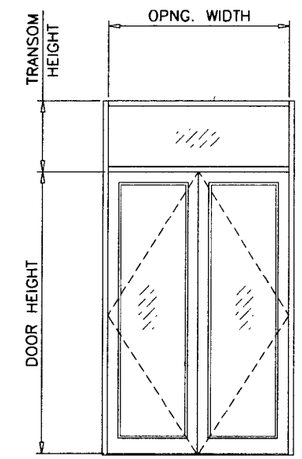


( O/XX )

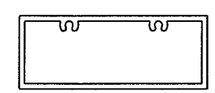

TRANSOM
WITHOUT REINF.

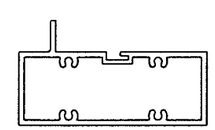

TRANSOM
WITH REINF.

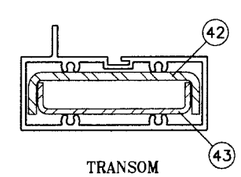


NOTE:
GLASS CAPACITIES ON THIS SHEET ARE BASED ON ASTM E1300-04 (3 SEC. GUSTS) AND FLORIDA BUILDING COMMISSION DECLARATORY STATEMENT DCA05-DEC-219

Engr: JAVAD AHMAD
CIVIL
FLA. PE # 70592
C.A.N. 3538

JUN 09 2010

PRODUCT RENEWED
as complying with the Florida
Building Code
Acceptance No 10-0511.02
Expiration Date 05/12/2011
By Manuel Perez
Miami/Dade Product Control
Division


AL-FAROOQ CORPORATION
ENGINEERS & PRODUCT DEVELOPMENT
1235 S.W. 87 AVE
MIAMI, FLORIDA 33174
TEL. (305) 264-8100 FAX. (305) 262-6978
COMP-ANL\W04-91SM


SERIES K2LM ALUM OUT-SWING ENTRANCE DOOR


Pande Pane LLC dba. SMI Systems
11305 N.W. 128 STREET
MEDLEY, FL. 33178
TEL. (305) 888-6288 FAX. (305) 888-6289


revisions:

| no | date | by | description |
|---|---|---|---|
| A | 03.30.05 | | REV. PER BCCO COMMENTS |
| B | 05.05.10 | | UPDATED TO 2007 FBC |

date: 10-25-04
scale: 1/2"=1'-0"
dr. by: HAMID
chk. by:

drawing no.
W04-91

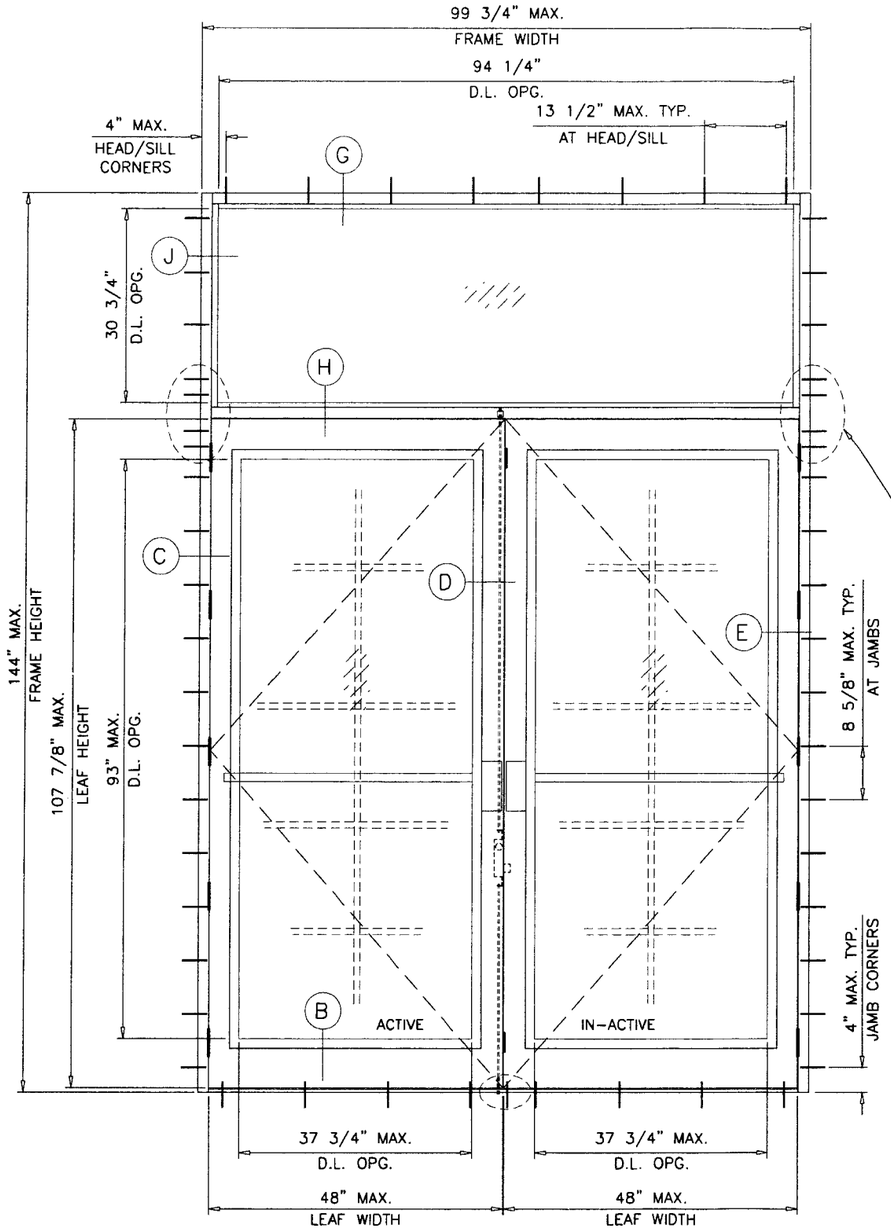


( O/XX )

TYPICAL ELEVATION

| SUBSTRATE | NO. OF ANCHORS AT TRANSOM ENDS | |
|---|---|---|
| | WITHOUT REINF. | WITHOUT REINF. |
| WOOD | 5 | 8 |
| CONCRETE | 3 | 5 |
| METAL | 3 | 4 |

Engr: JAVAD AHMAD
CIVIL
FLA. PE # 70592
C.A.N. 3538

JUN 09 2010

PRODUCT RENEWED
as complying with the Florida
Building Code
Acceptance No 10-0511.02
Expiration Date 05/12/2011
By
Miami Dade Product Control
Division


AL-FAROOQ CORPORATION
ENGINEERS & PRODUCT DEVELOPMENT
1235 S.W. 87 AVE
MIAMI, FLORIDA 33174
TEL. (305) 264-8100 FAX. (305) 262-6978


COMP-ANL\W04-91SM

SERIES K2LM ALUM OUT-SWING ENTRANCE DOOR

**Pande Pane LLC dba. SMI Systems**
11305 N.W. 128 STREET
MEDLEY, FL. 33178
TEL. (305) 888-6288 FAX. (305) 888-6289

revisions:

| no | date | by | description |
|---|---|---|---|
| A | 03.30.05 | | NO CHANGE THIS SHEET |
| B | 05.05.10 | | UPDATED TO 2007 FBC |

date: 10-25-04
scale: 1/2"=1'-0"
dr. by: HAMID
chk. by:

drawing no.
W04-91

sheet 4 of 11

| DOOR MULLION LOAD CAPACITY | | |
|---|---|---|
| NOMINAL DIMS. | | LOADS-PSF |
| WIDTH (W) | FRAME HEIGHT | EXT.(+) & INT.(-) |
| 24" | 80" | 100.0 |
| 30" | | 100.0 |
| 36" | | 100.0 |
| 42" | | 100.0 |
| 48" | | 100.0 |
| 54" | | 100.0 |
| 60" | | 100.0 |
| 24" | 84" | 100.0 |
| 30" | | 100.0 |
| 36" | | 100.0 |
| 42" | | 100.0 |
| 48" | | 100.0 |
| 54" | | 100.0 |
| 60" | | 100.0 |
| 24" | 90" | 100.0 |
| 30" | | 100.0 |
| 36" | | 100.0 |
| 42" | | 100.0 |
| 48" | | 100.0 |
| 54" | | 100.0 |
| 24" | 96" | 100.0 |
| 30" | | 100.0 |
| 36" | | 100.0 |
| 42" | | 100.0 |
| 48" | | 100.0 |
| 24" | 102" | 100.0 |
| 30" | | 100.0 |
| 36" | | 100.0 |
| 42" | | 100.0 |
| 48" | | 100.0 |
| 24" | 108" | 100.0 |
| 30" | | 100.0 |
| 36" | | 100.0 |
| 42" | | 100.0 |
| 24" | 114" | 100.0 |
| 30" | | 100.0 |
| 36" | | 100.0 |
| 42" | | 100.0 |
| 24" | 120" | 100.0 |
| 30" | | 100.0 |
| 36" | | 100.0 |
| 42" | | 99.7 |

| SUBSTRATE | NO. OF ANCHORS AT DOOR MULLION |
|---|---|
| WOOD | 8 |
| CONCRETE | 4 |
| METAL | 4 |

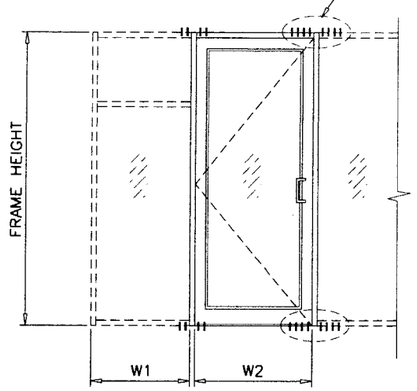


$$\text{WIDTH (W)} = \frac{W1 + W2}{2}$$

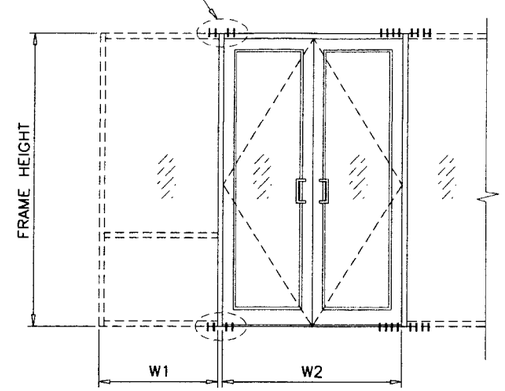


$$\text{WIDTH (W)} = \frac{W1}{2} + \frac{W2}{4}$$

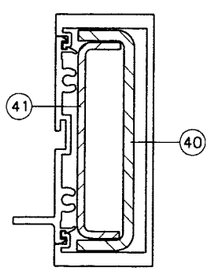


DOOR MULLION

Engr: JAVAD AHMAD
CIVIL
FLA. PE # 70592
C.A.N. 3538

JUN 09 2010

PRODUCT RENEWED
as complying with the Florida
Building Code
Acceptance No 10-0511.02
Expiration Date 06/12/2011
By
Miami-Dade Product Control
Division


AL-FAROOQ CORPORATION
ENGINEERS & PRODUCT DEVELOPMENT
1235 S.W. 87 AVE
MIAMI, FLORIDA 33174
TEL. (305) 264-8100 FAX. (305) 262-6978
COMP-ANL\W04-91SM


SERIES K2LM ALUM OUT-SWING ENTRANCE DOOR

Pande Pane LLC dba. SMI Systems
11305 N.W. 128 STREET
MEDLEY, FL. 33178
TEL. (305) 888-6288 FAX. (305) 888-6289

revisions:

| no | date | by | description |
|---|---|---|---|
| A | 03.30.05 | | REV. PER BCCO COMMENTS |
| B | 05.05.10 | | UPDATED TO 2007 FBC |

date: 10-25-04
scale: 1/2"=1'-0"
dr. by: HAMID
chk. by:

drawing no.
W04-91

## DOOR MULLION LOAD CAPACITY

| NOMINAL DIMS. | | | | LOADS-PSF |
|---|---|---|---|---|
| DOOR WIDTH W1 | SIDELITE WIDTH W2 | DOOR HEIGHT A | FRAME SPAN L | EXT. (+) INT. (-) |
| 60" | 30" | 80" | 108" | 100.0 |
| | 33" | | | 100.0 |
| | 39" | | | 100.0 |
| | 42" | | | 100.0 |
| 72" | 30" | | | 100.0 |
| | 33" | | | 100.0 |
| | 39" | | | 100.0 |
| | 42" | | | 100.0 |
| 84" | 30" | | | 100.0 |
| | 33" | | | 100.0 |
| | 39" | | | 97.3 |
| | 42" | | | 94.7 |
| 96" | 30" | | | 96.7 |
| | 33" | | | 94.2 |
| | 39" | | | 89.4 |
| | 42" | | | 87.3 |
| 60" | 30" | 80" | 114" | 100.0 |
| | 33" | | | 100.0 |
| | 39" | | | 100.0 |
| | 42" | | | 99.5 |
| 72" | 30" | | | 100.0 |
| | 33" | | | 98.4 |
| | 39" | | | 92.7 |
| | 42" | | | 90.1 |
| 84" | 30" | | | 91.6 |
| | 33" | | | 89.1 |
| | 39" | | | 84.4 |
| | 42" | | | 82.2 |
| 96" | 30" | | | 83.5 |
| | 33" | | | 81.4 |
| | 39" | | | 77.4 |
| 60" | 30" | 80" | 120" | 99.7 |
| | 33" | | | 96.4 |
| | 39" | | | 90.4 |
| | 42" | | | 87.6 |
| 72" | 30" | | | 88.8 |
| | 33" | | | 86.1 |
| | 39" | | | 81.3 |
| | 42" | | | 79.1 |
| 84" | 30" | | | 80.0 |
| | 33" | | | 77.9 |
| | 39" | | | 73.9 |
| | 42" | | | 72.1 |
| 96" | 30" | | | 72.7 |
| | 33" | | | 71.0 |

## DOOR MULLION LOAD CAPACITY

| NOMINAL DIMS. | | | | LOADS-PSF |
|---|---|---|---|---|
| DOOR WIDTH W1 | SIDELITE WIDTH W2 | DOOR HEIGHT A | FRAME SPAN L | EXT. (+) INT. (-) |
| 60" | 30" | 84" | 108" | 100.0 |
| | 33" | | | 100.0 |
| | 39" | | | 100.0 |
| | 42" | | | 100.0 |
| 72" | 30" | | | 100.0 |
| | 33" | | | 100.0 |
| | 39" | | | 100.0 |
| | 42" | | | 100.0 |
| 84" | 30" | | | 100.0 |
| | 33" | | | 100.0 |
| | 39" | | | 100.0 |
| | 42" | | | 97.8 |
| 96" | 30" | | | 100.0 |
| | 33" | | | 97.7 |
| | 39" | | | 92.6 |
| | 42" | | | 90.3 |
| 60" | 30" | 84" | 114" | 100.0 |
| | 33" | | | 100.0 |
| | 39" | | | 100.0 |
| | 42" | | | 100.0 |
| 72" | 30" | | | 100.0 |
| | 33" | | | 100.0 |
| | 39" | | | 95.4 |
| | 42" | | | 92.6 |
| 84" | 30" | | | 94.7 |
| | 33" | | | 92.0 |
| | 39" | | | 87.0 |
| | 42" | | | 84.7 |
| 96" | 30" | | | 86.5 |
| | 33" | | | 84.2 |
| | 39" | | | 80.0 |
| 60" | 30" | 84" | 120" | 100.0 |
| | 33" | | | 99.0 |
| | 39" | | | 92.6 |
| | 42" | | | 89.7 |
| 72" | 30" | | | 91.4 |
| | 33" | | | 88.5 |
| | 39" | | | 83.5 |
| | 42" | | | 81.2 |
| 84" | 30" | | | 82.5 |
| | 33" | | | 80.3 |
| | 39" | | | 76.0 |
| | 42" | | | 74.1 |
| 96" | 30" | | | 75.2 |
| | 33" | | | 73.3 |

## DOOR MULLION LOAD CAPACITY

| NOMINAL DIMS. | | | | LOADS-PSF |
|---|---|---|---|---|
| DOOR WIDTH W1 | SIDELITE WIDTH W2 | DOOR HEIGHT A | FRAME SPAN L | EXT. (+) INT. (-) |
| 60" | 30" | 96" | 108" | 100.0 |
| | 33" | | | 100.0 |
| | 39" | | | 100.0 |
| | 42" | | | 100.0 |
| 72" | 30" | | | 100.0 |
| | 33" | | | 100.0 |
| | 39" | | | 100.0 |
| | 42" | | | 100.0 |
| 84" | 30" | | | 100.0 |
| | 33" | | | 100.0 |
| | 39" | | | 100.0 |
| | 42" | | | 100.0 |
| 96" | 30" | | | 100.0 |
| | 33" | | | 100.0 |
| | 39" | | | 100.0 |
| | 42" | | | 100.0 |
| 60" | 30" | 96" | 114" | 100.0 |
| | 33" | | | 100.0 |
| | 39" | | | 100.0 |
| | 42" | | | 100.0 |
| 72" | 30" | | | 100.0 |
| | 33" | | | 100.0 |
| | 39" | | | 100.0 |
| | 42" | | | 100.0 |
| 84" | 30" | | | 100.0 |
| | 33" | | | 100.0 |
| | 39" | | | 95.6 |
| | 42" | | | 92.8 |
| 96" | 30" | | | 96.5 |
| | 33" | | | 93.7 |
| | 39" | | | 88.5 |
| 60" | 30" | 96" | 120" | 100.0 |
| | 33" | | | 100.0 |
| | 39" | | | 99.8 |
| | 42" | | | 96.5 |
| 72" | 30" | | | 100.0 |
| | 33" | | | 96.8 |
| | 39" | | | 90.7 |
| | 42" | | | 87.9 |
| 84" | 30" | | | 91.0 |
| | 33" | | | 88.2 |
| | 39" | | | 83.1 |
| | 42" | | | 80.7 |
| 96" | 30" | | | 83.3 |
| | 33" | | | 81.0 |

## DOOR MULLION LOAD CAPACITY

| NOMINAL DIMS. | | | | LOADS-PSF |
|---|---|---|---|---|
| DOOR WIDTH W1 | SIDELITE WIDTH W2 | DOOR HEIGHT A | FRAME SPAN L | EXT. (+) INT. (-) |
| 60" | 30" | 108" | 114" | 100.0 |
| | 33" | | | 100.0 |
| | 39" | | | 100.0 |
| | 42" | | | 100.0 |
| 72" | 30" | | | 100.0 |
| | 33" | | | 100.0 |
| | 39" | | | 100.0 |
| | 42" | | | 100.0 |
| 84" | 30" | | | 100.0 |
| | 33" | | | 100.0 |
| | 39" | | | 100.0 |
| | 42" | | | 100.0 |
| 96" | 30" | | | 100.0 |
| | 33" | | | 100.0 |
| | 39" | | | 98.3 |
| 60" | 30" | 108" | 120" | 100.0 |
| | 33" | | | 100.0 |
| | 39" | | | 100.0 |
| | 42" | | | 100.0 |
| 72" | 30" | | | 100.0 |
| | 33" | | | 100.0 |
| | 39" | | | 98.8 |
| | 42" | | | 95.5 |
| 84" | 30" | | | 100.0 |
| | 33" | | | 97.4 |
| | 39" | | | 91.1 |
| | 42" | | | 88.3 |
| 96" | 30" | | | 92.9 |
| | 33" | | | 89.9 |

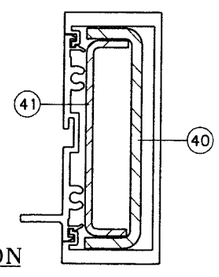


DOOR MULLION

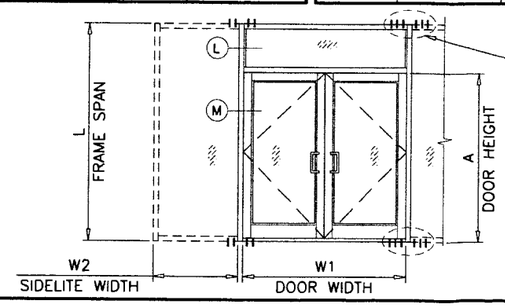


| SUBSTRATE | NO. OF ANCHORS AT DOOR MULLION |
|---|---|
| WOOD | 12 |
| CONCRETE | 6 |
| METAL | 6 |

Engr: JAVAD AHMAD
CIVIL
FLA. PE # 70592
C.A.N. 3539

JUN 09 2010

PRODUCT RENEWED
as complying with the Florida
Building Code
Acceptance No 10-0511.02
Expiration Date 05/12/2011
By Manuel Perez
Miami-Dade Product Control


AL-FAROOQ CORPORATION
ENGINEERS & PRODUCT DEVELOPMENT
1235 S.W. 87 AVE
MIAMI, FLORIDA 33174
TEL. (305) 264-8100 FAX. (305) 262-6978


COMP-ANL\W04-91SM

SERIES K2LM ALUM OUT-SWING ENTRANCE DOOR


Pande Pane LLC dba. SMI Systems
11305 N.W. 128 STREET
MEDLEY, FL. 33178
TEL. (305) 888-6288 FAX. (305) 888-6289


revisions:

| no | date | by | description |
|---|---|---|---|
| A | 03.30.05 | | REV. PER BCCO COMMENTS |
| B | 05.05.10 | | UPDATED TO 2007 FBC |

date: 10-25-04
scale: 1/2"=1'-0"
dr. by: HAMID
chk. by:

drawing no.
W04-91

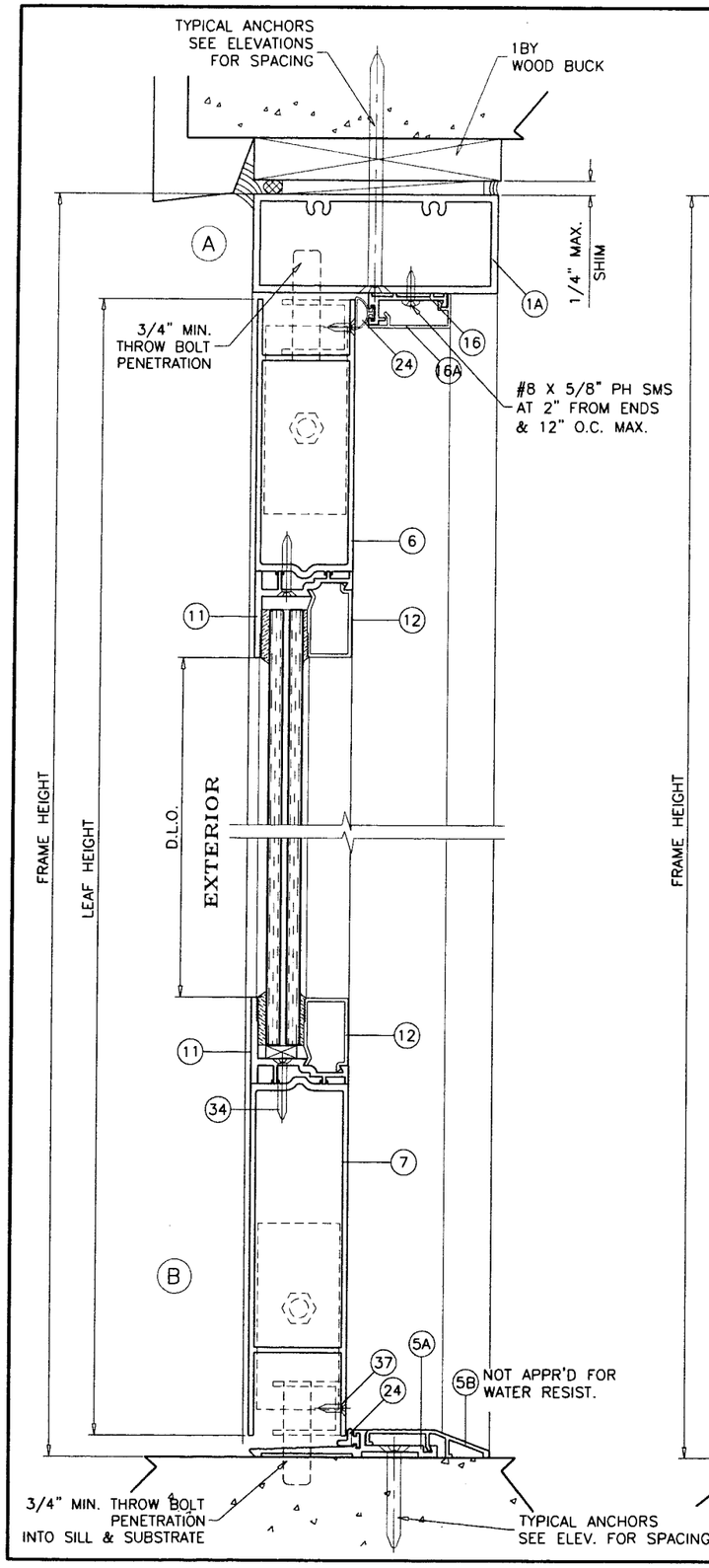


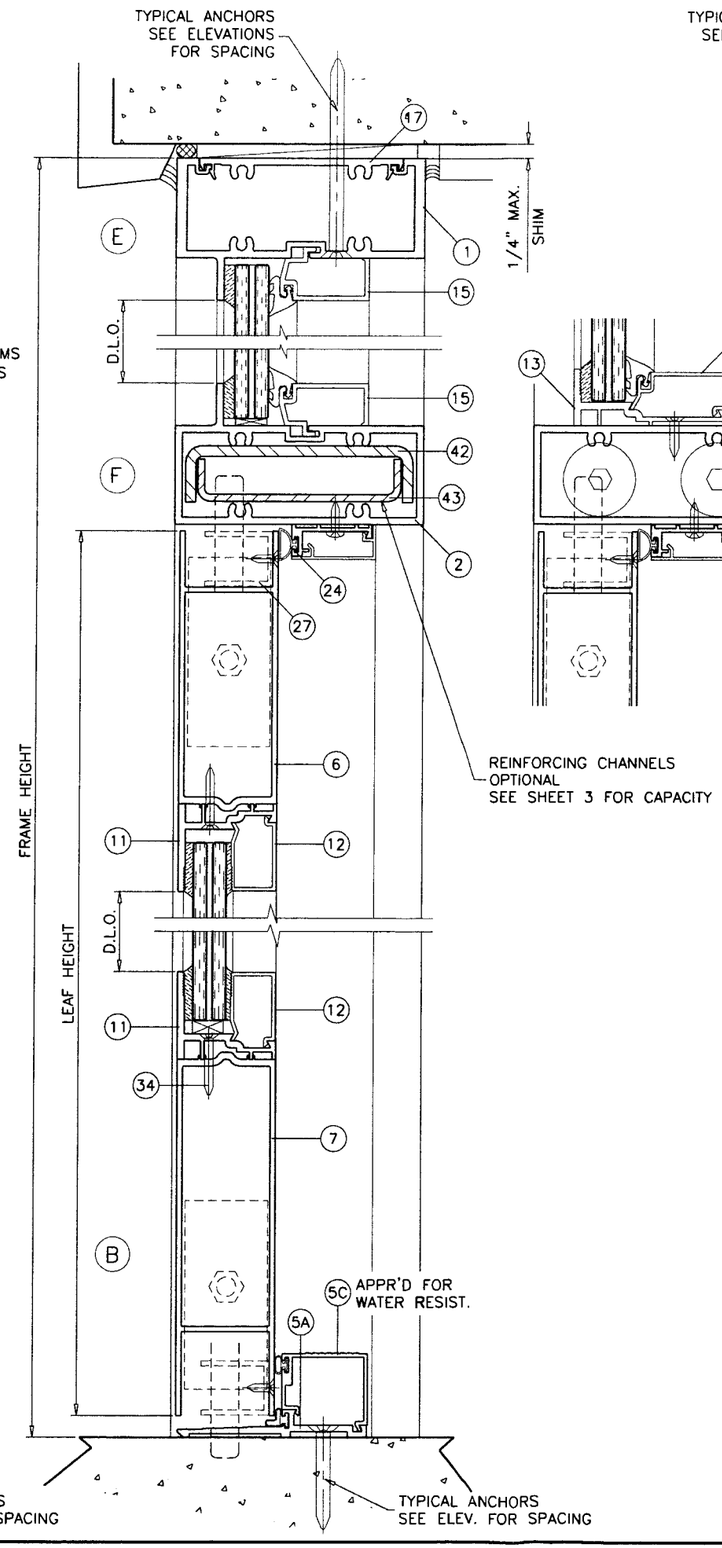


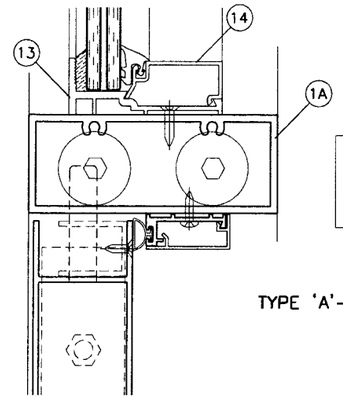


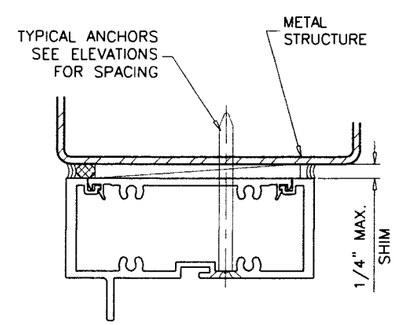


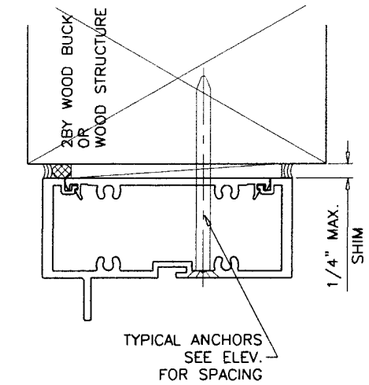


WOOD BUCKS AND METAL STRUCTURE NOT BY SMITH MOUNTAIN MUST SUSTAIN LOADS IMPOSED BY GLAZING SYSTEM AND TRANSFER THEM TO THE BUILDING STRUCTURE.

**TYPICAL ANCHORS:** SEE ELEV. FOR SPACING

TYPE 'A'– 1/4" DIA. ULTRACON BY 'ELCO' (Fu=177 KSI, Fy=155 KSI)
INTO 2BY WOOD BUCKS OR WOOD STRUCTURES
1–3/8" MIN. PENETRATION INTO WOOD
THRU 1BY BUCKS INTO CONC. OR MASONRY
1–1/4" MIN. EMBED INTO CONC. OR MASONRY

TYPE 'B'– 1/4" DIA. ULTRACON BY 'ELCO' (Fu=177 KSI, Fy=155 KSI)
DIRECTLY INTO CONC. OR MASONRY
1–1/4" MIN. EMBED INTO MASONRY
1–3/4" MIN. EMBED INTO CONCRETE

TYPE 'C'– #14 SMS OR SELF DRILLING SCREWS (GRADE 2 CRS)
INTO MIAMI–DADE COUNTY APPROVED MULLIONS (MIN. THK.=1/8")
INTO METAL STRUCTURES
STEEL : 12 GA. MIN. (Fy = 36 KSI MIN.)
ALUMINUM : 1/8" THK. MIN. (6063–T5 MIN.)
(STEEL IN CONTACT WITH ALUMINUM TO BE PLATED OR PAINTED)

TYPICAL EDGE DISTANCE
INTO CONCRETE AND MASONRY = 2–1/2" MIN.
INTO WOOD STRUCTURE = 1" MIN.
INTO METAL STRUCTURE = 3/4" MIN.

TYPICAL CL TO CL DISTANCE
INTO CONCRETE AND MASONRY = 3" MIN.
INTO WOOD STRUCTURE = 1" MIN.
INTO METAL STRUCTURE = 1" MIN.

CONCRETE AT HEAD, SILL OR JAMBS f'c = 3000 PSI MIN.
C–90 HOLLOW/FILLED BLOCK AT JAMBS f'm = 2000 PSI MIN.

Engr: JAVAD AHMAD
CIVIL
FLA. PE # 70592
C.A.N. 3538

JUN 09 2010

PRODUCT RENEWED
as complying with the Florida Building Code
Acceptance No. 10-0511.02
Expiration Date 05/12/2011
By Miami Dade Product Control Division


AL-FAROOQ CORPORATION
ENGINEERS & PRODUCT DEVELOPMENT
1235 S.W. 87 AVE
MIAMI, FLORIDA 33174
TEL. (305) 264-8100 FAX. (305) 262-6978
COMP-ANL\W04-91SM


SERIES K2LM ALUM OUT-SWING ENTRANCE DOOR


Pande Pane LLC dba. SMI Systems
11305 N.W. 128 STREET
MEDLEY, FL. 33178
TEL. (305) 888-6288 FAX. (305) 888-6289


revisions:

| no | date | by | description |
|---|---|---|---|
| A | 03.30.05 | | NO CHANGE THIS SHEET |
| B | 05.05.10 | | UPDATED TO 2007 FBC |

date: 10-25-04
scale: 3/8" = 1"
dr. by: HAMID
chk. by:

drawing no. W04-91

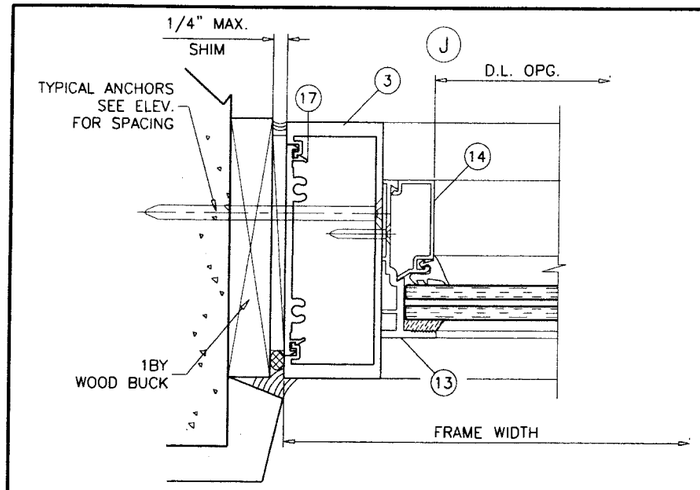


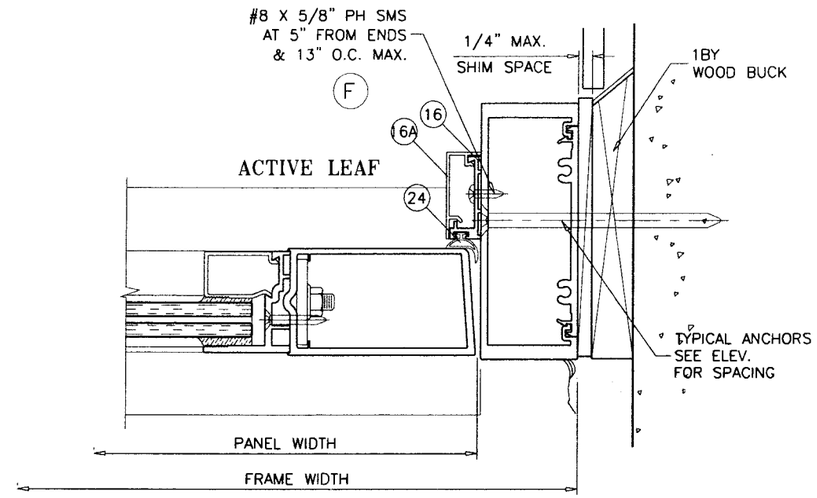


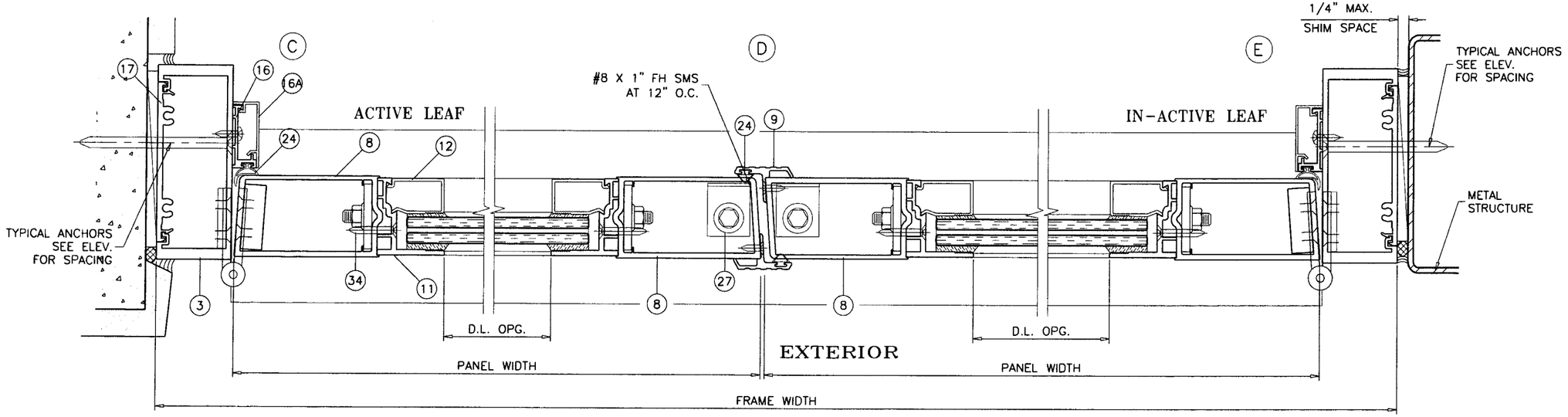


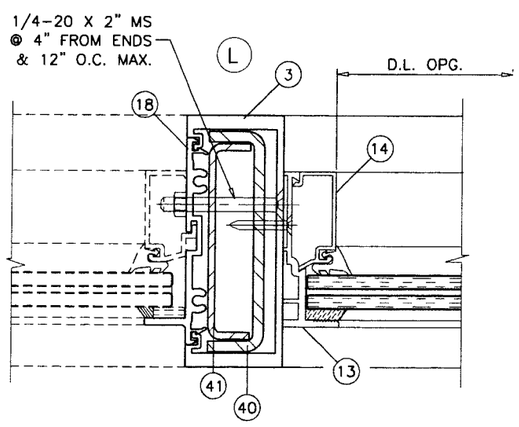


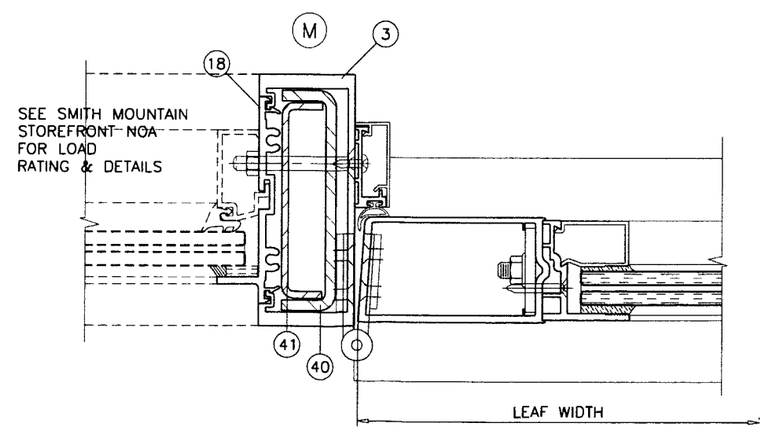


Engr: JAVAD AHMAD
CIVIL
FLA. PE # 70592
C.A.N. 3538

JUN 09 2010

**PRODUCT RENEWED**
as complying with the Florida
Building Code
Acceptance No 10-0511.02
Expiration Date 05/12/2011
By Mamuel Perez
Miami Dade Product Control
Division


**AL-FAROOQ CORPORATION**
ENGINEERS & PRODUCT DEVELOPMENT
1235 S.W. 87 AVE
MIAMI, FLORIDA 33174
TEL. (305) 264-8100 FAX. (305) 262-6978


COMP-ANL\W04-91SM

SERIES K2LM ALUM OUT-SWING ENTRANCE DOOR

**Pande Pane LLC dba. SMI Systems**
11305 N.W. 128 STREET
MEDLEY, FL. 33178
TEL. (305) 888-6288 FAX. (305) 888-6289

revisions:

| no | date | by | description |
|---|---|---|---|
| A | 03.30.05 | | REV. PER BCCO COMMENTS |
| B | 05.05.10 | | UPDATED TO 2007 FBC |

date: 10-25-04
scale: 3/8" = 1"
dr. by: HAMID
chk. by:

drawing no.
W04-91

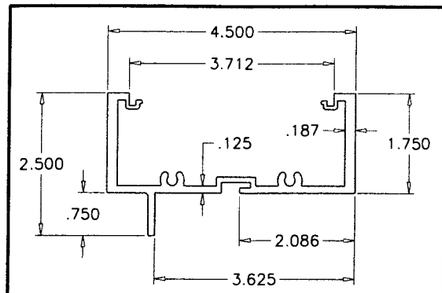


1 FRAME HEAD

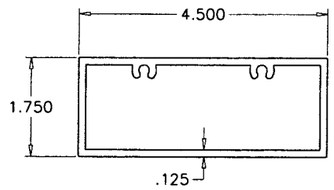


1A ALT. FRAME HEAD

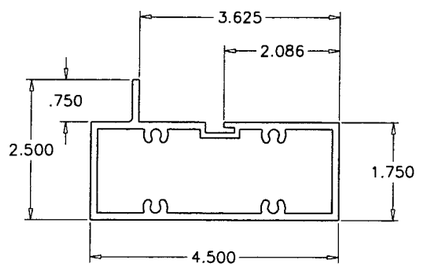


2 FRAME TRANSOM

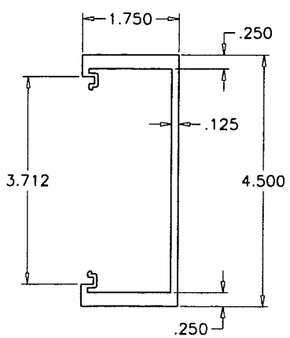


3 FRAME JAMB

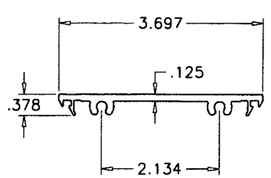


17 FLAT FILLER

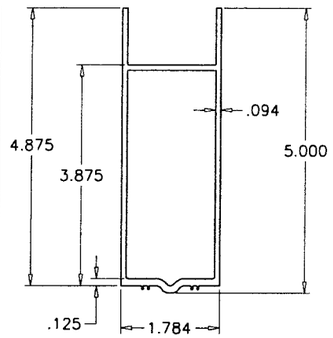


6 TOP RAIL

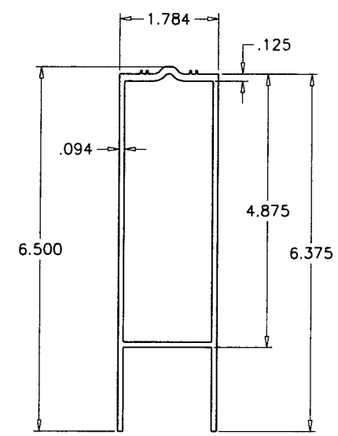


7 BOTTOM RAIL

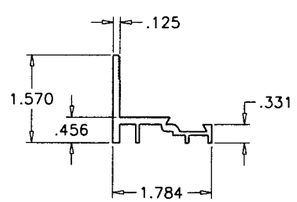


11 EXTERIOR GLASS STOP (DOOR)

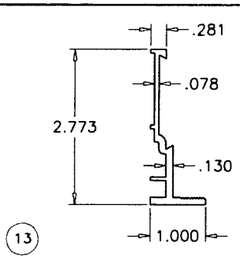


13 EXTERIOR GLASS STOP (TRANSOM)

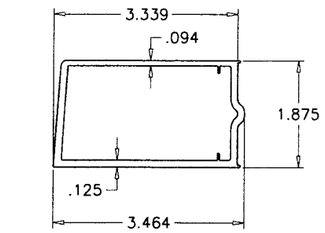


8 DOOR STILE

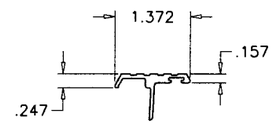


9 ASTRAGAL STILE

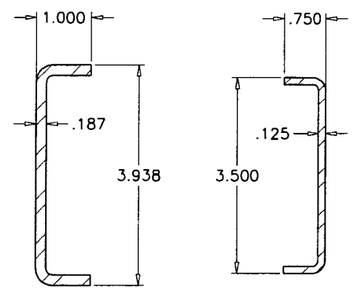


40 41 REINFORCING CHANNELS

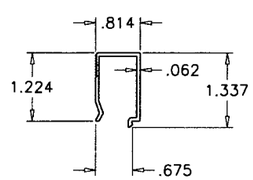


12 INTERIOR GLASS STOP (DOOR)

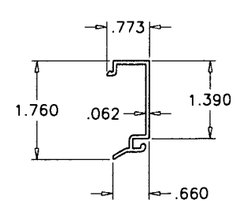


14 INTERIOR GLASS STOP (TRANSOM)

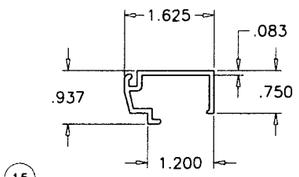


15 GLASS STOP (TRANSOM HEAD/SILL)

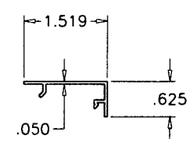


16A DOOR STOP COVER

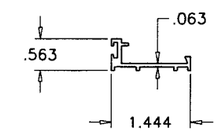


16 DOOR STOP

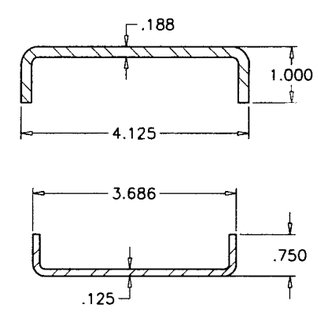


42 43 REINFORCING CHANNELS

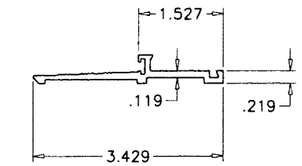


5A BUMPER THRESHOLD

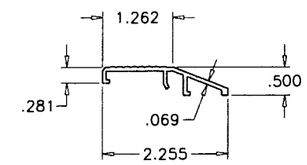


5B STD. THRESHOLD COVER

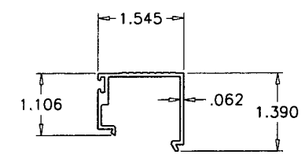


5C HI-RISE THRESHOLD COVER

Engr: JAVAD AHMAD
CIVIL
FLA. PE # 70592
C.A.N. 3538

JUN 09 2010

PRODUCT RENEWED
as complying with the Florida
Building Code
Acceptance No 10-0511.02
Expiration Date 05/12/2011
By Manuel Perez
Miami-Dade Product Control
Division


AL-FAROOQ CORPORATION
ENGINEERS & PRODUCT DEVELOPMENT
1235 S.W. 87 AVE
MIAMI, FLORIDA 33174
TEL. (305) 264-8100 FAX. (305) 262-6978


COMP-ANL\W04-91SM

SERIES K2LM ALUM OUT-SWING ENTRANCE DOOR

**Pande Pane LLC dba. SMI Systems**
11305 N.W. 128 STREET
MEDLEY, FL. 33178
TEL. (305) 888-6288 FAX. (305) 888-6289

revisions:

| no | date | by | description |
|---|---|---|---|
| A | 03.30.05 | | NO CHANGE THIS SHEET |
| B | 05.05.10 | | UPDATED TO 2007 FBC |

date: 10-25-04
scale: 3/8" = 1"
dr. by: HAMID
chk. by:

drawing no.
W04-91

## LOCK OPTIONS:

### OPTION 1:

**SINGLE LEAF DOORS:**

ALL SINGLE LEAF DOORS TO BE FITTED WITH
3 POINT LOCK

**DOUBLE LEAF DOORS:**

**ACTIVE LEAF:**

THREE POINT LOCK SYSTEM WITH 5 PLY HOOK LOCK
BOLT REGENT 2222, KEY OPERATED ON EXTERIOR
AND THUMB-TURN ON INTERIOR, LOCATED AT
34" FROM BOTTOM OF PANEL

**INACTIVE LEAF:**

TWO POINT LOCK SYSTEM SULLIVAN CH 103
WITH THUMB TURN ON THE INTERIOR, LOCATED AT
34" FROM BOTTOM OF PANEL

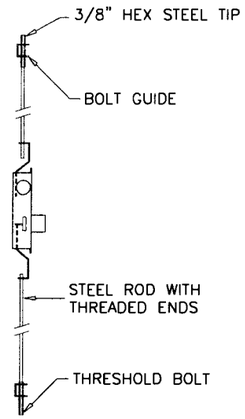


### OPTION 2:

**SINGLE LEAF DOORS:**

ALL SINGLE LEAF DOORS TO BE FITTED WITH
3 POINT LOCK

**DOUBLE LEAF DOORS:**

**ACTIVE LEAF:**

THREE POINT LOCK SYSTEM WITH 4 PLY HOOK LOCK
REGENT NO. 206-3P, KEY OPERATED ON EXTERIOR
AND THUMB-TURN ON INTERIOR, LOCATED AT
36" FROM BOTTOM OF PANEL

**INACTIVE LEAF:**

TWO POINT LOCK SYSTEM SULLIVAN CH 103
WITH THUMB TURN ON THE INTERIOR, LOCATED AT
36" FROM BOTTOM OF PANEL

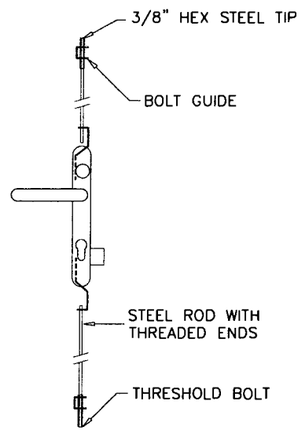


| ITEM # | PART # | SMIS EXT. # | REQD. | DESCRIPTION | MATERIAL | MANF./SUPPLIER/REMARKS |
|---|---|---|---|---|---|---|
| 1 | 5806 | SMI-001 | 1 | FRAME HEAD | 6063-T6 | - |
| 1A | SMM-006 | SMI-006 | 1 | ALT. FRAME HEAD | 6063-T6 | - |
| 2 | 5710 | SMI-018 | AS REQD. | FRAME TRANSOM | 6063-T6 | - |
| 3 | SMM-6007 | SMI-005 | 2 | FRAME JAMB | 6063-T6 | - |
| 5A | SMM-023 | SMI-023 | 1 | BUMPER THRESHOLD | 6063-T5 | - |
| 5B | SMM-024 | SMI-024 | 1 | STD. THRESHOLD COVER | 6063-T5 | - |
| 5C | SMM-025 | SMI-025 | 1 | HI-RISE THRESHOLD COVER | 6063-T5 | - |
| 6 | SMM-5984 | SMI-012 | 1/ LEAF | TOP RAIL | 6063-T6 | - |
| 7 | SMM-5987 | SMI-013 | 1/ LEAF | BOTTOM RAIL | 6063-T6 | - |
| 8 | SMM-5986 | SMI-011 | 2/ LEAF | DOOR STILE | 6063-T6 | - |
| 9 | SMI-030 | SMI-030 | 1/ LEAF | ASTRAGAL | 6063-T5 | - |
| 11 | SMM-5981 | SMI-007 | 4/ LEAF | EXTERIOR GLASS STOP (DOOR) | 6063-T5 | - |
| 12 | SMM-5982 | SMI-008 | 4/ LEAF | INTERIOR GLASS STOP (DOOR) | 6063-T5 | - |
| 13 | SMM-003 | SMI-016 | - | EXTERIOR GLASS STOP (TRANSOM JAMB) | - | - |
| 14 | SMM-004 | SMI-017 | - | INTERIOR GLASS STOP (TRANSOM JAMB) | - | - |
| 15 | SMM-5712 | SMI-002 | 2/ LITE | GLASS STOP (TRANSOM HEAD/SILL) | - | - |
| 16 | SMM-002 | SMI-014 | 3/ DOOR | DOOR STOP | 6063-T5 | - |
| 16A | SMM-001 | SMI-015 | 3/ DOOR | DOOR STOP COVER | 6063-T5 | - |
| 17 | SMM-5807A | SMI-004 | OPTIONAL | FLAT FILLER | 6063-T6 | - |
| 18 | SMI-003 | - | AS REQD. | INTERMEDIATE SNAP-IN | 6063-T5 | - |
| 19 | H-63 | SMI-G01 | AS REQD. | WEDGE-IN GASKET | NEOPRENE | GLAZING RUBBER PRODUCTS |
| 24 | - | SMI-G03 | AS REQD. | BULB W'STRIPPING | VINYL | - |
| 26 | - | - | 2/ LEAF | 3/8" THREADED ROD WITH NUT | STEEL | - |
| 27 | - | - | 2/ LEAF | FLUSH BOLT GUIDE | ST. STEEL | - |
| 28 | - | - | AS REQD. | PUSH BAR | - | - |
| 29 | - | - | AS REQD. | PULL HANDLE | - | - |
| 30 | - | - | 2 | THRESHOLD CLIP | ALUMINUM | 2" X 2" X 1/8" X 7/8" LONG |
| 31 | - | - | 4/ LEAF | SUPPORT PLATE (1-1/2" X 3-3/8" X 3/16") | ALUMINUM | - |
| 33 | #12 X 1-1/2" | - | AS REQD. | FRAME ASSEMBLY SCREWS | - | HEX H TEKS |
| 35 | #12 X 3/4" | - | AS REQD. | THRESHOLD CLIP SCREWS | - | FH SELF DRILLING |
| 37 | #10 X 5/16" | - | 2/ GUIDE | GUIDE INSTALLATION SCREWS | - | FH MS |
| 40 | - | - | - | REINFORCING CHANNEL (DOOR MULL) | STEEL | 1" X 3-15/16" X 1" X 3/16" THK. |
| 41 | - | - | - | REINFORCING CHANNEL (DOOR MULL) | STEEL | 3/4" X 3-1/2" X 3/4" X 1/8" THK. |
| 42 | - | - | OPTIONAL | REINFORCING CHANNEL (TRANSOM) | STEEL | 1" X 4-1/8" X 1" X 3/16" THK. |
| 43 | - | - | OPTIONAL | REINFORCING CHANNEL (TRANSOM) | STEEL | 3/4" X 3-11/16" X 3/4" X 1/8" THK. |

## HINGES:

4-1/2 X 4" TWO PIECE STAINLESS STEEL BUTT HINGES
AT 8" FROM TOP AND BOTTOM AND 26" O.C. MAX.

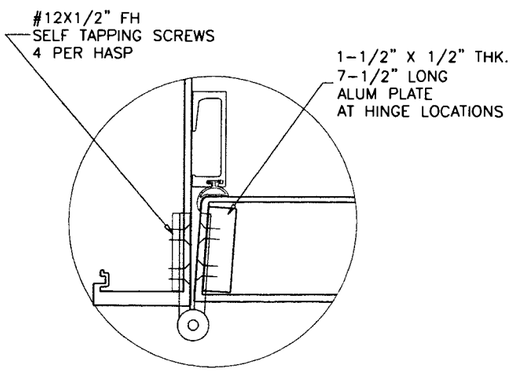


## SEALANTS:

ALL FRAME AND LEAF CORNERS AND INSTALLATION SCREWS
SEALED WITH SILICONE.

Engr: JAVAD AHMAD
CIVIL
FLA. PE # 70592
C.A.N. 3538

JUN 09 2010

PRODUCT RENEWED
as complying with the Florida
Building Code
Acceptance No 10-0511.02
Expiration Date 05/12/2011
By Manuel Paez
Miami-Dade Product Control
Division


AL-FAROOQ CORPORATION
ENGINEERS & PRODUCT DEVELOPMENT
1235 S.W. 87 AVE
MIAMI, FLORIDA 33174
TEL. (305) 264-8100 FAX. (305) 262-6978


COMP-ANL\W04-91SM

SERIES K2LM ALUM OUT-SWING ENTRANCE DOOR


Pande Pane LLC dba. SMI Systems
11305 N.W. 128 STREET
MEDLEY, FL. 33178
TEL. (305) 888-6288 FAX. (305) 888-6289


revisions:

| no | date | by | description |
|---|---|---|---|
| A | 03.30.05 | | NO CHANGE THIS SHEET |
| B | 05.05.10 | | UPDATED TO 2007 FBC |

date: 10-25-04
scale: 3/8" = 1"
dr. by: HAMID
chk. by:

drawing no.
W04-91

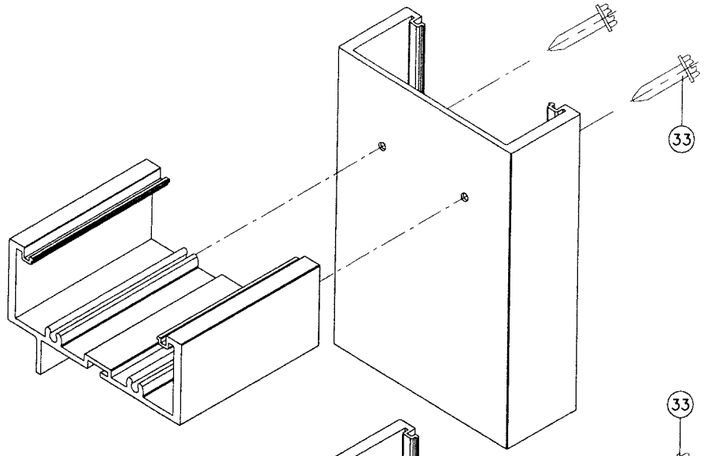


FRAME TOP CORNER

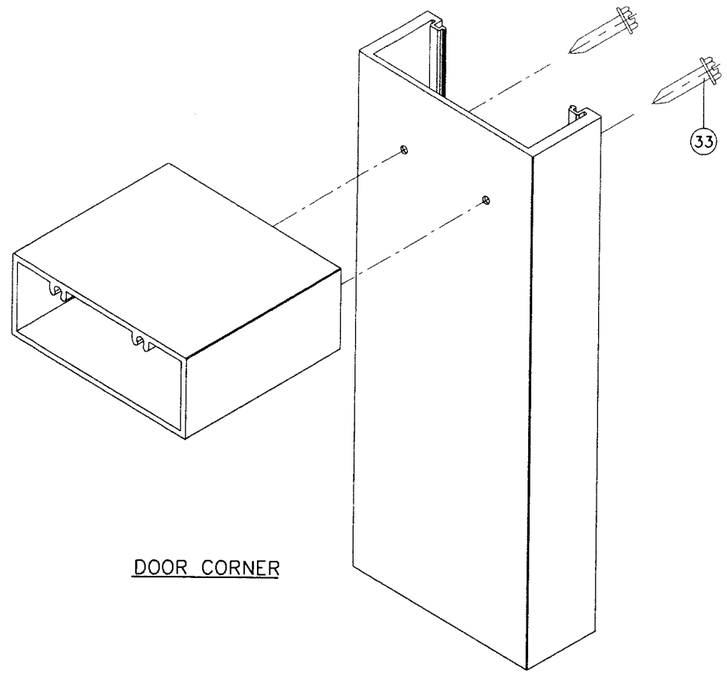


DOOR CORNER

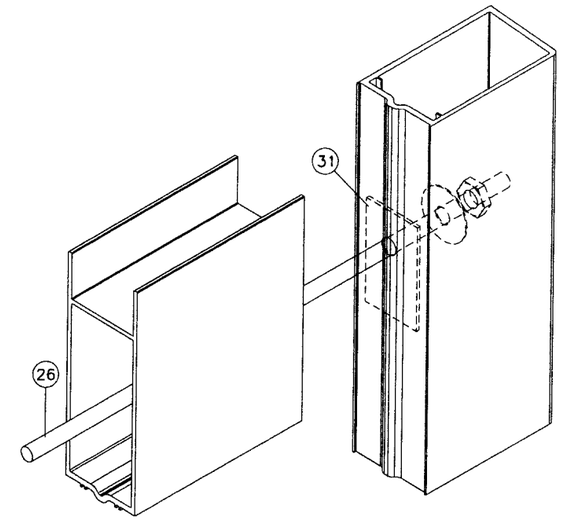


DOOR LEAF CORNER

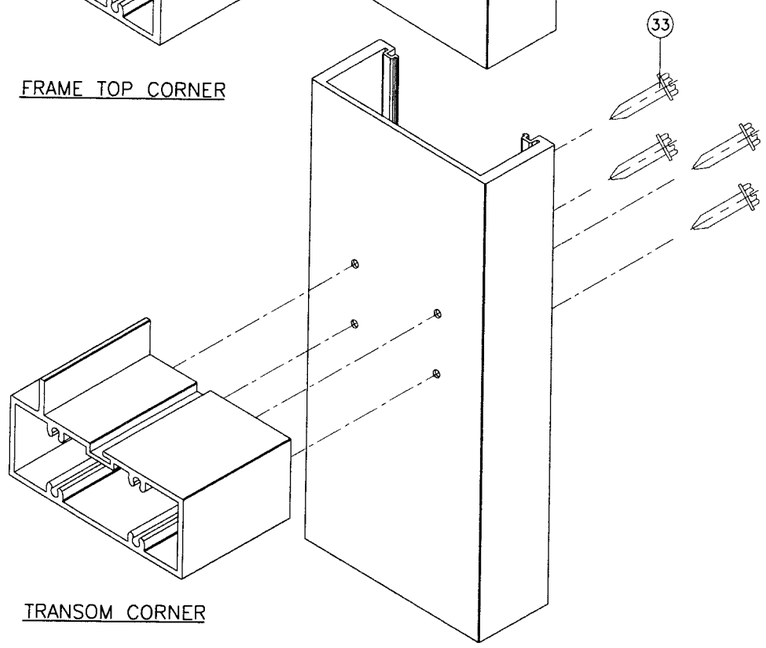


TRANSOM CORNER

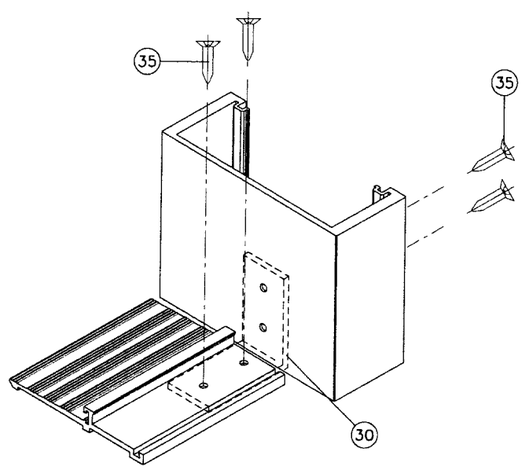


FRAME BOTTOM CORNER

Engr: JAVAD AHMAD
CIVIL
FLA. PE # 70592
C.A.N. 3538

JUN 09 2010

PRODUCT RENEWED
as complying with the Florida
Building Code
Acceptance No 10-0511.02
Expiration Date 05/12/2011
By Manuel Perez
Miami Dade Product Control
Division

**AL-FAROOQ CORPORATION**
ENGINEERS & PRODUCT DEVELOPMENT
1235 S.W. 87 AVE
MIAMI, FLORIDA 33174
TEL. (305) 264-8100 FAX. (305) 262-6978

COMP-ANL\W04-91SM

SERIES K2LM ALUM OUT-SWING ENTRANCE DOOR

**Pande Pane LLC dba. SMI Systems**
11305 N.W. 128 STREET
MEDLEY, FL. 33178
TEL. (305) 888-6288 FAX. (305) 888-6289

revisions:

| no | date | by | description |
|---|---|---|---|
| A | 03.30.05 | | NO CHANGE THIS SHEET |
| B | 05.05.10 | | UPDATED TO 2007 FBC |

date: 10-25-04
scale: 3/8" = 1"
dr. by: HAMID
chk. by:

drawing no.
W04-91

sheet 11 of 11