MIAMI-DADE COUNTY
BUILDING CODE COMPLIANCE OFFICE (BCCO)
PRODUCT CONTROL DIVISION

MIAMI-DADE COUNTY, FLORIDA
METRO-DADE FLAGLER BUILDING
140 WEST FLAGLER STREET, SUITE 1603
MIAMI, FLORIDA 33130-1563
(305) 375-2901 FAX (305) 372-6339
www.miamidade.gov/buildingcode

NOTICE OF ACCEPTANCE (NOA)

Carnes Company, Inc.
448 South Main Street
Verona, WI 53593

SCOPE:

This NOA is being issued under the applicable rules and regulations governing the use of construction materials. The documentation submitted has been reviewed by Miami-Dade County Product Control Division and accepted by the Board of Rules and Appeals (BORA) to be used in Miami Dade County and other areas where allowed by the Authority Having Jurisdiction (AHJ).

This NOA shall not be valid after the expiration date stated below. The Miami-Dade County Product Control Division (In Miami Dade County) and/or the AHJ (in areas other than Miami Dade County) reserve the right to have this product or material tested for quality assurance purposes. If this product or material fails to perform in the accepted manner, the manufacturer will incur the expense of such testing and the AHJ may immediately revoke, modify, or suspend the use of such product or material within their jurisdiction. BORA reserves the right to revoke this acceptance, if it is determined by Miami-Dade County Product Control Division that this product or material fails to meet the requirements of the applicable building code.

This product is approved as described herein, and has been designed to comply with the Florida Building Code, including the High Velocity Hurricane Zone.

DESCRIPTION: Model FRVB/FSVB Aluminum Louver with or without CD-151 Damper

APPROVAL DOCUMENT: Drawing No. **10-040**, titled "Carnes Model FRVB/FSVB", sheets 1 through 7 of 7, dated 05/04/10, prepared by Tilteco, Inc., signed and sealed by Walter A. Tillit Jr., P.E., bearing the Miami-Dade County Product Control revision stamp with the Notice of Acceptance number and expiration date by the Miami-Dade County Product Control Division.

MISSILE IMPACT RATING: Large and Small Missile Impact Resistant.

LABELING: Each unit shall bear a permanent label with the manufacturer's name or logo, city, state and following statement: "Miami-Dade County Product Control Approved", unless otherwise noted herein.

RENEWAL of this NOA shall be considered after a renewal application has been filed and there has been no change in the applicable building code negatively affecting the performance of this product.

TERMINATION of this NOA will occur after the expiration date or if there has been a revision or change in the materials, use, and/or manufacture of the product or process. Misuse of this NOA as an endorsement of any product, for sales, advertising or any other purposes shall automatically terminate this NOA. Failure to comply with any section of this NOA shall be cause for termination and removal of NOA.

ADVERTISEMENT: The NOA number preceded by the words Miami-Dade County, Florida, and followed by the expiration date may be displayed in advertising literature. If any portion of the NOA is displayed, then it shall be done in its entirety.

INSPECTION: A copy of this entire NOA shall be provided to the user by the manufacturer or its distributors and shall be available for inspection at the job site at the request of the Building Official.

This NOA **revises NOA # 07-0524.02** and consists of this page 1 and evidence page E-1, as well as approval document mentioned above.

The submitted documentation was reviewed by **Carlos M. Utrera, P.E.**

MIAMI-DADE COUNTY APPROVED

07/06/10

NOTICE OF ACCEPTANCE: EVIDENCE SUBMITTED

A. DRAWINGS

1. Drawing No. **10-040**, titled "Carnes Model FRVB/FSVB", sheets 1 through 7 of 7, dated 05/04/10, prepared by Tilteco, Inc., signed and sealed by Walter A. Tillit Jr., P.E.

B. B. TESTS

1. Test report of Uniform Static Air Pressure Test per TAS 202-94, Large Missile Impact Test per TAS 201-94 and Cyclic Wind Pressure Loading per TAS 203-94 on 144" x 96" of aluminum louver system with damper prepared by American Test Lab of South Florida, Test Report No. **0203.01-05,** dated 03/10/05, signed and sealed by W. R. Mehner, P.E. and H. Hattem, P.E.
2. Test report of Wind Driven Rain Resistance per TAS (A) 95 on VV-10-D Louver w/ CD151 Parallel Blade Damper, prepared by PRI Asphalt Technologies, Inc, Test Report No. **PRI05014**, dated 02/08/05, signed and sealed by C. L. Thomas, P.E.
3. Test report of Tensile Test per ASTM E-8 of 6 samples, Test Report No. **5BM-187**, dated 03/07/05, signed by Frank Grate.

C. CALCULATIONS

1. Anchoring calculations, prepared by Tilteco Inc, dated 01/13/09, sheets 1 through 3 of 3, complying with F.B.C. 2007, signed and sealed by Walter A. Tillit Jr., P.E.

D. QUALITY ASSURANCE

1. Miami Dade Building Code Compliance Office (BCCO)

E. MATERIAL CERTIFICATIONS

1. None.

F. STATEMENTS

1. Letter of code compliance with FBC 2007, issued by Tilteco, Inc., dated 05/04/10, signed and sealed by Walter A. Tillit, Jr., P.E.
2. Letter of no financial interest issued by Tilteco, Inc., dated 05/04/10, signed and sealed by Walter A. Tillit, Jr., P.E.
3. Private Labeling Agreement dated 05/22/07.

07/06/10

Carlos M. Utrera, P.E.
Product Control Examiner
NOA No. 10-0511.07
Expiration Date: August 18, 2015
Approval Date: July 28, 2010

GENERAL NOTES:

1.) ALUMINUM LOUVER SYSTEM W/ OR W/O DAMPER SHOWN ON THIS PRODUCT APPROVAL DOCUMENT (P.A.D.) HAS BEEN VERIFIED FOR COMPLIANCE IN ACCORDANCE WITH THE 2007 EDITION OF THE FLORIDA BUILDING CODE.
THIS ALUMINUM LOUVER SYSTEM W/ OR W/O DAMPER MAY BE INSTALLED AT HIGH VELOCITY HURRICANE ZONES.
DESIGN WIND LOADS SHALL BE DETERMINED AS PER SECTION 1620 OF THE ABOVE MENTIONED CODE.
ALUMINUM LOUVER SYSTEM W/ OR W/O DAMPER'S ADEQUACY FOR IMPACT AND FATIGUE RESISTANCE HAS BEEN VERIFIED IN ACCORDANCE WITH SECTION 1626 OF THE ABOVE MENTIONED CODE AS PER AMERICAN TESTING LAB REPORT #0203.01-05, AS PER TAS-201, TAS-202, TAS-203, & PRI TECHNOLOGIES LAB REPORT #UEC-001-02-01, PER TAS-100A (WIND DRIVEN RAIN)

DESIGN PRESSURE RATING:
+150, -150 psf.

2.) ALL ALUMINUM EXTRUSIONS SHALL BE 6063-T5 ALLOY W/ MIN. SPECIFIC YIELD STRENGTHS AS SHOWN ON SHEET 2.

3.) ALL SCREWS TO BE STAINLESS STEEL 304 OR 316 SERIES WITH 50 ksi YIELD POINT AND 90 ksi TENSILE STRENGTH OR CORROSION RESISTANT CARBON STEEL AS PER DIN 50018.

4.) ALL WELDING OF ALUMINUM FRAMING SHALL BE IN ACCORDANCE WITH THE AMERICAN WELDING SOCIETY A.W.S. D.1.2 REGULATIONS. USE CERTIFIED WELDERS. USE ER-5356 ELECTRODES.

5.) ANCHORS TO EXISTING STRUCTURE SHALL BE AS FOLLOWS (SEE SHEET 6):

(A) ANCHORS SHALL BE INSTALLED FOLLOWING ALL OF THE RECOMMENDATIONS AND SPECIFICATIONS OF THE ANCHOR'S MANUFACTURER. E.D. IS BEYOND ANY WALL FINISH.

10.) IT SHALL BE RESPONSIBILITY OF THE CONTRACTOR TO VERIFY THE SOUNDNESS OF THE STRUCTURE WHERE LOUVER SYSTEM IS TO BE ATTACHED TO INSURE PROPER ANCHORAGE.

11.) (a) THIS PRODUCT APPROVAL DOCUMENT (P.A.D.) PREPARED BY THIS ENGINEER IS GENERIC AND DOES NOT PROVIDE INFORMATION FOR A SPECIFIC PROJECT; i.e. WHERE THE SITE CONDITIONS DEVIATE FROM THE P.A.D.

(b) CONTRACTOR TO BE RESPONSIBLE FOR THE SELECTION, PURCHASE AND INSTALLATION INCLUDING LIFE SAFETY OF THIS PRODUCT, BASED ON THIS P.A.D., PROVIDED HE/SHE DOES NOT DEVIATE FROM THE CONDITIONS DETAILED ON THIS DOCUMENT.
CONSTRUCTION SAFETY AT SITE IS THE CONTRACTOR'S RESPONSIBILITY.

(c) THIS PRODUCT APPROVAL DOCUMENT WILL BE CONSIDERED INVALID IF MODIFIED.

(d) SITE SPECIFIC PROJECTS SHALL BE PREPARED BY A FLORIDA REGISTERED ENGINEER OR ARCHITECT WHICH WILL BECOME THE ENGINEER OF RECORD (E.O.R.) FOR THE PROJECT AND WHO WILL BE RESPONSIBLE FOR THE PROPER USE OF THE P.A.D.

(e) ORIGINAL P.A.D. SHALL BEAR THE DATE AND ORIGINAL SEAL AND SIGNATURE OF THE PROFESSIONAL ENGINEER THAT PREPARED IT.

12.) LOUVER MANUFACTURER LABEL SHALL BE PLACED ON THE EXPOSED SURFACE OF LOUVER BLADE (COMPONENT 1L).
ONE LABEL SHALL BE PLACED FOR EVERY OPENING AND SHALL READ AS FOLLOWS:
CARNES COMPANY, INC.
VERONA, WI
MIAMI-DADE COUNTY PRODUCT CONTROL APPROVED.

ANCHOR TYPE	MANUFACTURER	DIAMETER OR GAGE	MIN. EMBEDMENT				MIN. EDGE DISTANCE (E.D)		
			TO CONCRETE (f'c=3192 psi) MIN.	TO CONCRETE BLOCK ASTM (C-90 UNIT)	TO 1/8" MIN. STEEL Fy=33 ksi (MIN.)	TO WOOD (G ≥ 0.55)	CONCRETE OR CONCRETE BLOCK	STEEL	WOOD
TAPCONS	ITW/ BUILDEX	1/4"	1-3/4"	1-1/4"	N/A	1 1/2"	3"	N/A	2"
TEK SCREWS	ITW/ BUILDEX	1/4"	N/A	N/A	3/4"	N/A	N/A	1"	N/A

6.) ALUMINUM LOUVER SYSTEM W/O DAMPER SHALL ONLY BE INSTALLED IN A LOCATION WHERE THE ROOM BEHIND THE LOUVER IS DESIGNED TO DRAIN WATER PENETRATING INTO THE ROOM, AND THE ROOM WILL HOUSE WATER RESISTANT/WATER PROOF EQUIPMENT, COMPONENTS, OR SUPPLIES.

7.) ALUMINUM LOUVER SYSTEM W/ DAMPER MAY BE INSTALLED IN LOCATIONS WHERE THE ROOM BEHIND THE LOUVER IS NOT DESIGNED TO DRAIN WATER PENETRATING INTO THE ROOM, OR THE ROOM WILL HOUSE NON-WATER RESISTANT EQUIPMENT, COMPONENTS, OR SUPPLIES. INSTALLATION ON LOUVER W/ DAMPER IS LIMITED TO 40 FT IN HEIGHT ACCORDING TO TABLE 3 OF TAS 100(A)-95.

8.) CD-151 DAMPER IS AN OPERABLE ASSEMBLY.
IT MAY BE OPERATED BY MEANS OF A HAND QUADRANT HANDLE MECHANISM (AS SHOWN ON SHEET 7) OR THROUGH AN ELECTRICAL OR PNEUMATIC ACTUATOR.
DAMPER'S OPERATIVE MECHANISM IS NOT PART OF THIS APPROVAL, BUT SHALL BE CERTIFIED BY AN INDEPENDENT TESTING AGENCY.

9.) ALL ALUMINUM IN CONTACT W/DISSIMILAR MATERIALS MUST BE PAINTED PER SECTIONS 2003.8.4.2, 2003.8.4.4, 2003.8.4.5 AND 2003.8.4.6 OF THE FLORIDA BUILDING CODE AS APPLICABLE.

FLORIDA BUILDING CODE (High Velocity Hurricane Zone)

PRODUCT REVISED
as complying with the Florida Building Code
Acceptance No 10-0511.07
Expiration Date 08/18/2015
By
Miami Dade Product Control Division
MIAMI-DADE COUNTY

WALTER A. TILLIT JR. LICENSE No. 44167 STATE OF FLORIDA PROFESSIONAL ENGINEER
P.E. SEAL, SIGNATURE, DATE

© 2010 TILTECO, INC

TILTECO INC.
TILLIT TESTING & ENGINEERING COMPANY
6355 N.W. 36th. St., Ste. 305, VIRGINIA GARDENS, Fl. 33166
Phone : (305)871-1530 . Fax : (305)871-1531
EB-0006719
WALTER A. TILLIT Jr. P.E.
FLORIDA Lic. # 44167

CARNES MODEL FRVB/FSVB.
UNITED ENERTECH, INC. W-10-D ALUMINUM LOUVER W/ OR W/O CD-151 DAMPER ASSEMBLY

CARNES COMPANY, INC
448 S. MAIN STREET
VERONA, WI 53593
PH: (608) 845-6411 FAX: (608) 845-6470

REV. No	DESCRIPTION	DATE	REV. No	DESCRIPTION	DATE
1	OLD DWG: 07-267	05/04/10	3	-	-
2	-	-	4	-	-

DRAWN BY: M.C.V.
05/04/10 DATE
10-040 DRAWING No
SHEET 1 OF 7

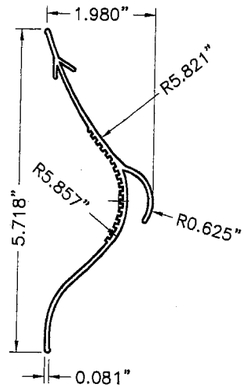

1L VERTICAL BLADE

MATERIAL:
(6063–T5 ALUMINUM ALLOY)
Fy(MIN.)=31.6 ksi

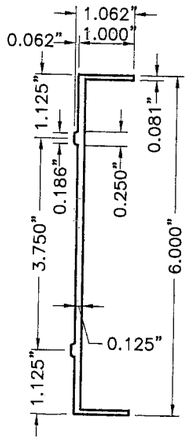

2L JAMB & HEAD

MATERIAL:
(6063–T5 ALUMINUM ALLOY)
Fy(MIN.)=25.3 ksi

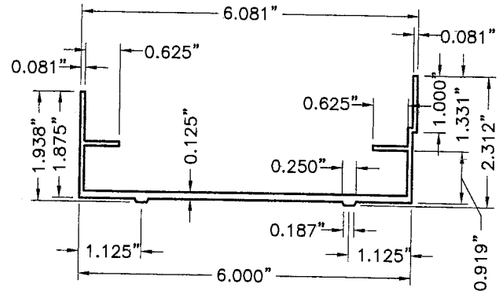

3L SILL

MATERIAL:
(6063–T5 ALUMINUM ALLOY)
Fy(MIN.)=32.7 ksi

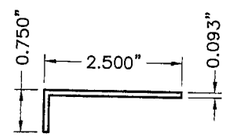

4L 1ST BLADE BLANK–OFF

MATERIAL:
FORMED ALUMINUM
(6063–T5 ALUMINUM ALLOY)

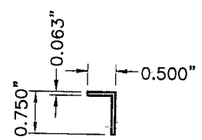

5L BLADE'S SPACER

MATERIAL:
(6063–T5 ALUMINUM ALLOY)

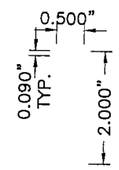

6L ALUM. CHANNEL

MATERIAL:
FORMED ALUMINUM
(6063–T5 ALUMINUM ALLOY)

7L BLANK–OFF PANEL

3 3/4" X .093" CONT ALUM. PLATE
(6063–T5 ALUMINUM ALLOY)

8L BLANK–OFF PANEL

3 1/8" X .093" CONT ALUM. PLATE
(6063–T5 ALUMINUM ALLOY)

9L COVER STRIP

2" X 1/8" X 92" MAX. ALUM. PLATE
(6063–T5 ALUMINUM ALLOY)

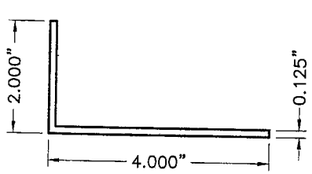

10L TOP & BOTTOM ALUM. ANGLE

MATERIAL:
(6063–T5 ALUMINUM ALLOY)

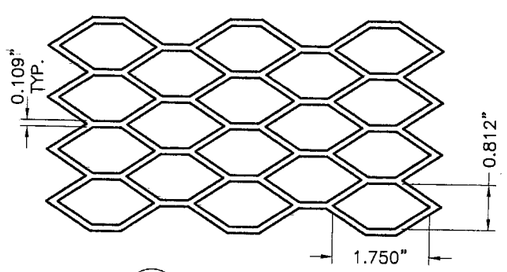

11L REAR MESH

MATERIAL:
NOMINAL 3/4"x0.050" THICK (0.17 lb/SQ. Ft)
(3003–H14 ALUMINUM ALLOY)

FRVB/FSVB LOUVER COMPONENTS

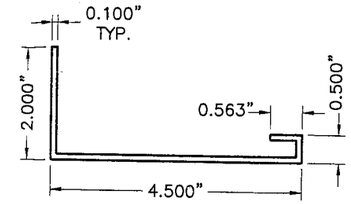

1D HEAD & SILL

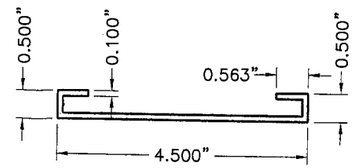

7D MID–HEIGHT HEAD or SILL

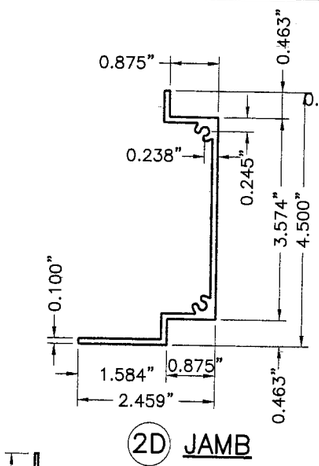

2D JAMB

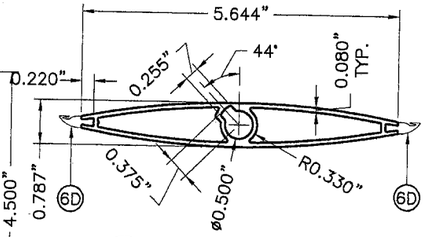

3D DAMPER BLADE

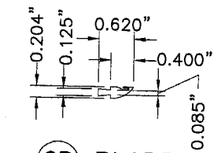

6D BLADE SEAL

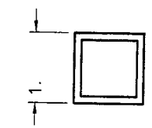

1I INTERMEDIATE TUBE FRAME

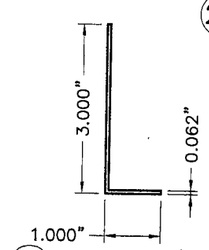

8D ALUM. ANGLE BLADE STOP

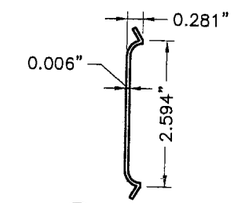

9D JAMB SEAL

CD–151 DAMPER AND INTERMEDIATE TUBE FRAME COMPONENTS

(EXCLUDES COMPONENTS FOR OPERATIVE MECHANISM, SEE NOTE 8/1)

BILL OF MATERIALS

ITEM	DESCRIPTION	MATERIAL	SIZE	REMARKS
1D	EXTRUDED ALUM HEAD & SILL	6063–T5 ALUMINUM ALLOY		
2D	EXTRUDED ALUM JAMB	6063–T5 ALUMINUM ALLOY		
3D	EXTRUDED ALUM DAMPER BLADE.	6063–T5 ALUMINUM ALLOY		
4D	BUSHING	BRONZE	1/2" I.D.(5/8" O.D.)x1/4"	
5D	AXLE PIN	ZAMAC No. 3 ZINC	1/2"x3 1/8"	
6D	BLADE SEAL	SILICONE	SEE DETAIL	`METER
7D	MID–HEIGHT EXTRUDED ALUM. HEAD or SILL	6063–T5 ALUMINUM ALLOY	SEE DETAIL	Fy(MIN.)=29.8 ksi
8D	ALUM. ANGLE BLADE STOP	6063–T5 ALUMINUM ALLOY		WITH VINYL WEATHER STRIP AT END OF 3" LEG
9D	JAMB SEAL	STAINLESS STEEL 316 SERIES	SEE DETAIL	ATTACHED TO 2D W/(3) DOUBLE SIDED (1"x1/8") TAPES
10D	SDS TEK SCREWS ITW / BUILDEX	ZINC PLATED STEEL	1/4"øx1" LONG	FASTEN TO 8D @ 12" O.C., 2 1/2" FROM ENDS
1I	INTERMEDIATE TUBE FRAME	6063–T5 ALUMINUM ALLOY	SEE DETAIL THIS SHEET AND SHEET 5.	

FLORIDA BUILDING CODE (High Velocity Hurricane Zone)

PRODUCT REVISED
as complying with the Florida Building Code
Acceptance No. 10-0511.07
Expiration Date 08/18/2015
By
Miami-Dade Product Control Division

MIAMI–DADE COUNTY

WALTER A. TILLIT JR. LICENSE No. 44167 STATE OF FLORIDA PROFESSIONAL ENGINEER

P.E. SEAL/SIGNATURE/DATE

© 2010 TILTECO, INC

TILTECO INC.
TILLIT TESTING & ENGINEERING COMPANY
6355 N.W. 36th. St., Ste. 305, VIRGINIA GARDENS, Fl. 33166
Phone : (305)871–1530 , Fax : (305)871–1531
EB–0006719
WALTER A. TILLIT Jr. P.E.
FLORIDA Lic. # 44167

CARNES MODEL FRVB/FSVB.

UNITED ENERTECH, INC. VV-10-D ALUMINUM LOUVER W/ OR W/O CD-151 DAMPER ASSEMBLY

CARNES COMPANY, INC
448 S. MAIN STREET
VERONA, WI 53593
PH: (608) 845–6411 FAX: (608) 845–6470

REV. No	DESCRIPTION	DATE	REV. No	DESCRIPTION	DATE
1	OLD DWG: 07-267	05/04/10	3	–	–
2	TITLE REVISED	06/28/10	4	–	–

DRAWN BY: M.C.V.

05/04/10 DATE

10–040 DRAWING No

SHEET 2 OF 7

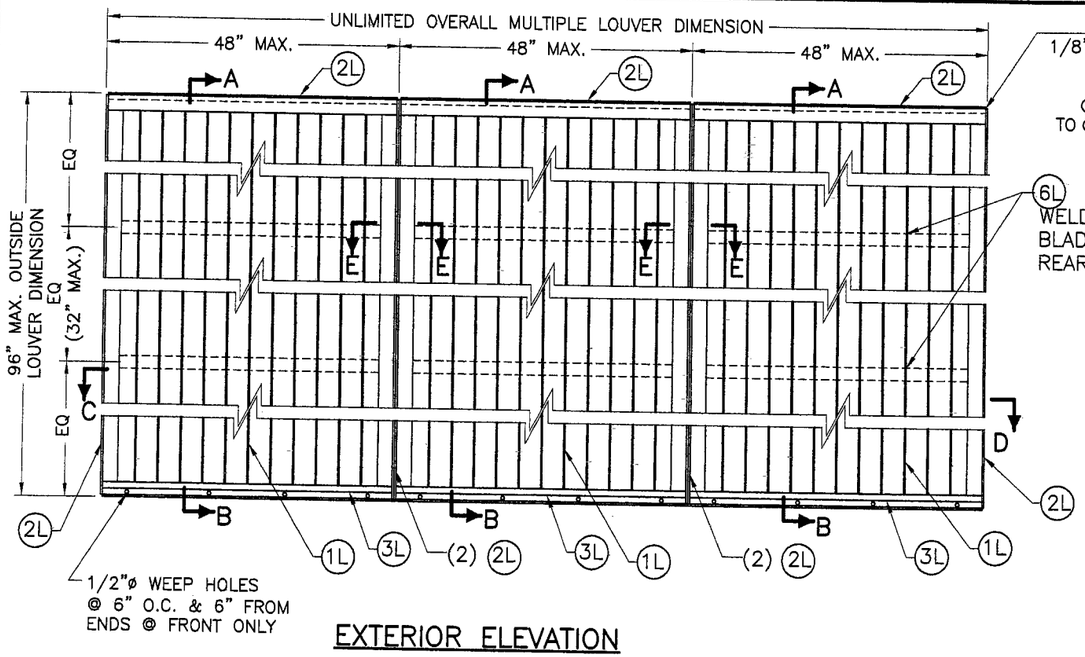

EXTERIOR ELEVATION
SCALE: 1/2"=1'-0"

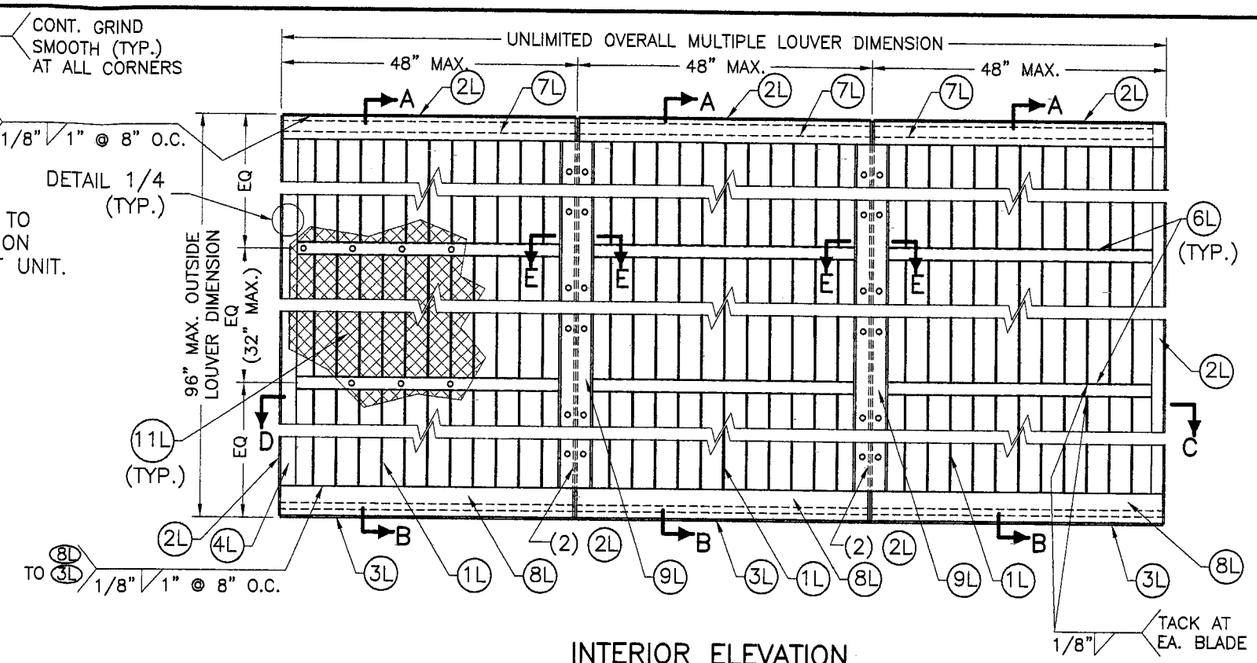

INTERIOR ELEVATION
SCALE: 1/2"=1'-0"

MULTIPLE FRVB/FSVB LOUVER UNITS

NOTES: (1) SEE COMPONENTS ON SHEET 2.
(2) SEE SECTIONS A THRU D ON SHEET 4.

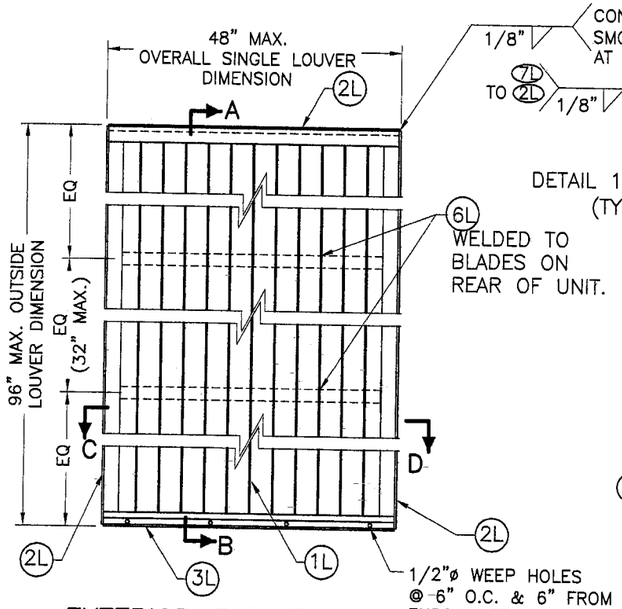

EXTERIOR ELEVATION
SCALE: 1/2"=1'-0"

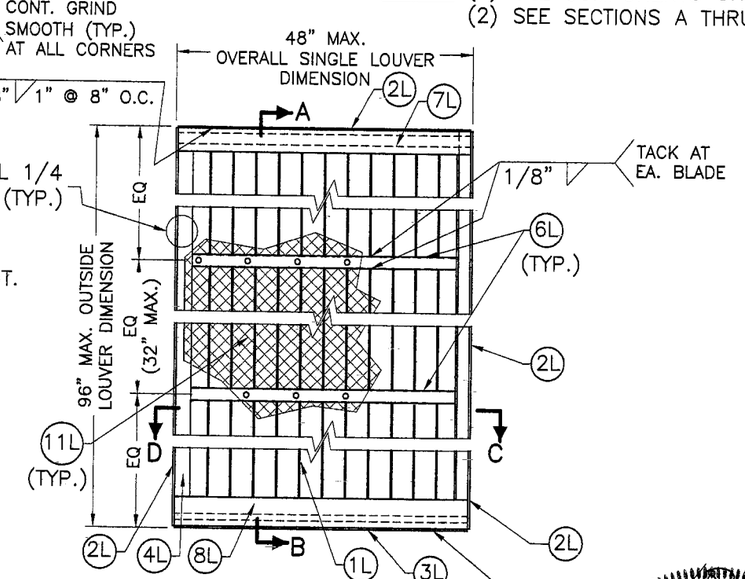

INTERIOR ELEVATION
SCALE: 1/2"=1'-0"

SINGLE FRVB/FSVB LOUVER UNITS

NOTES: (1) SEE COMPONENTS ON SHEET 2.
(2) SEE SECTIONS A THRU D ON SHEET 4.

FLORIDA BUILDING CODE (High Velocity Hurricane Zone)

PRODUCT REVISED
as complying with the Florida Building Code
Acceptance No 10-0511.07
Expiration Date 03/18/2015
By
Miami-Dade Product Control Division

MIAMI-DADE COUNTY

WALTER A. TILLIT JR. LICENSE No. 44167 STATE OF FLORIDA PROFESSIONAL ENGINEER

PROFESSIONAL SIGNATURE & DATE

© 2010 TILTECO, INC

TILTECO INC.
TILLIT TESTING & ENGINEERING COMPANY
6355 N.W. 36th. St., Ste. 305, VIRGINIA GARDENS, Fl. 33166
Phone : (305)871-1530 . Fax : (305)871-1531
EB-0006719
WALTER A. TILLIT Jr. P.E.
FLORIDA Lic. # 44167

CARNES MODEL FRVB/FSVB.
UNITED ENERTECH, INC. VV-10-D ALUMINUM LOUVER W/ OR W/O CD-151 DAMPER ASSEMBLY

CARNES COMPANY, INC
448 S. MAIN STREET
VERONA, WI 53593
PH: (608) 845-6411 FAX: (608) 845-6470

REV. No	DESCRIPTION	DATE	REV. No	DESCRIPTION	DATE
1	OLD. DWG: 07-267	05/04/10	3	–	–
2	TITLE REVISED	06/28/10	4	–	–

DRAWN BY: M.C.V.
05/04/10 DATE
10-040 DRAWING No
SHEET 3 OF 7

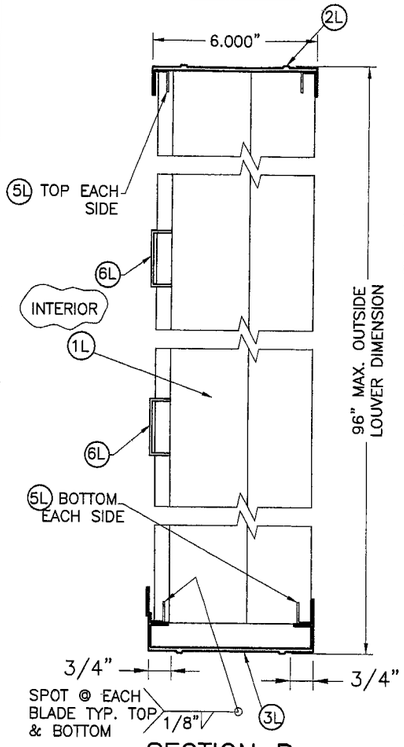

SECTION B

(SEE ELEVATIONS ON SHEET 3)

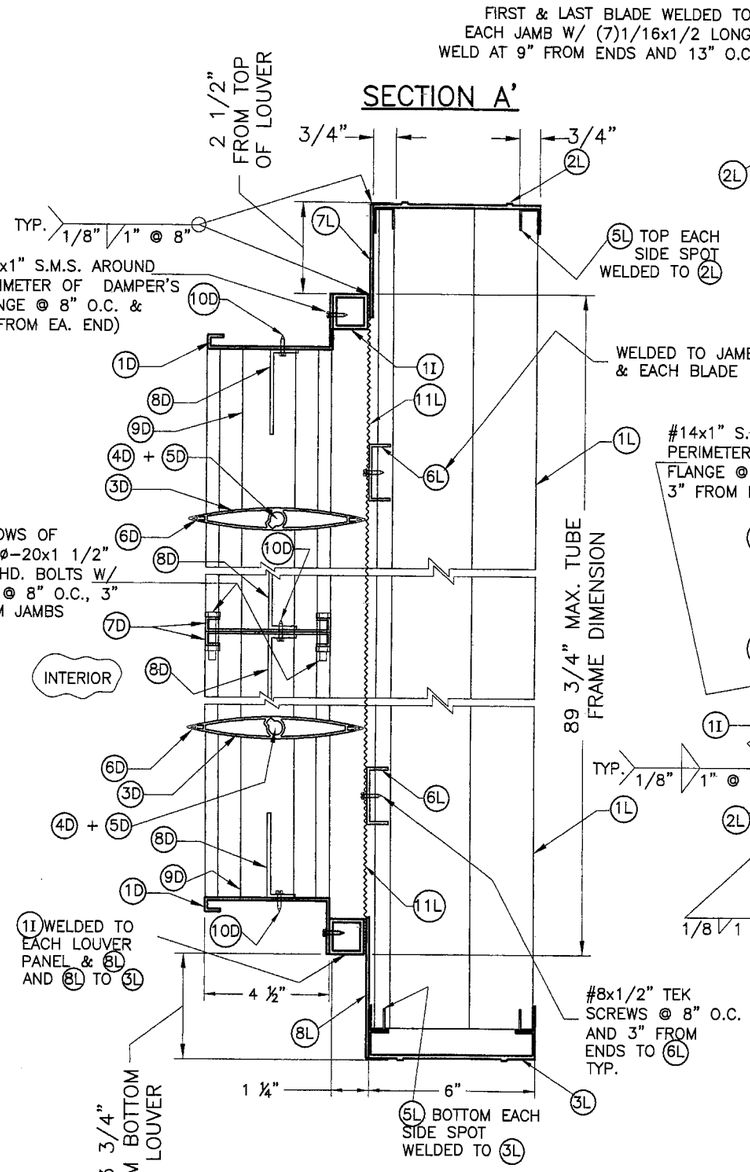

SECTION A'

SECTION A

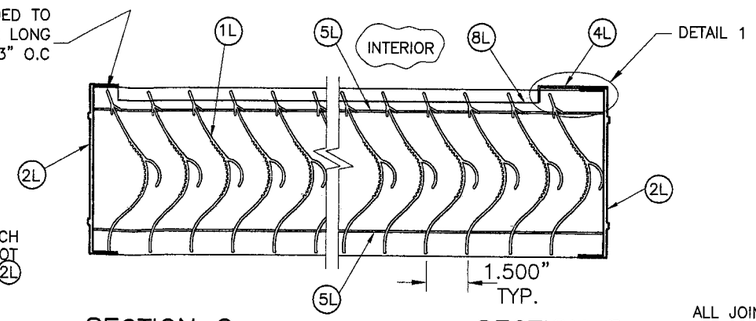

SECTION C

SCALE: 3/16"=1"

SECTION D

SCALE: 3/16"=1"

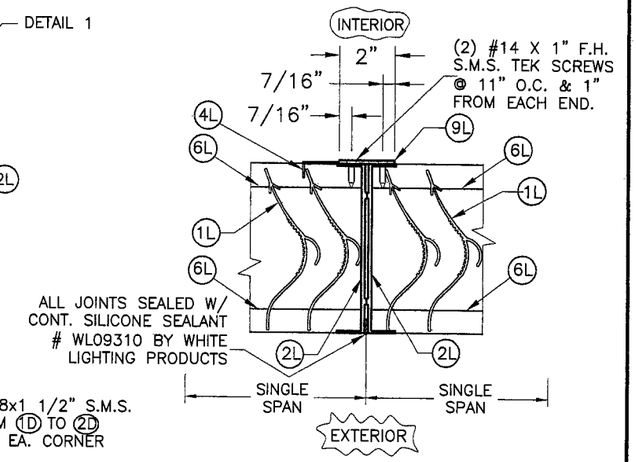

SECTION E–E

MULLION SPLICE

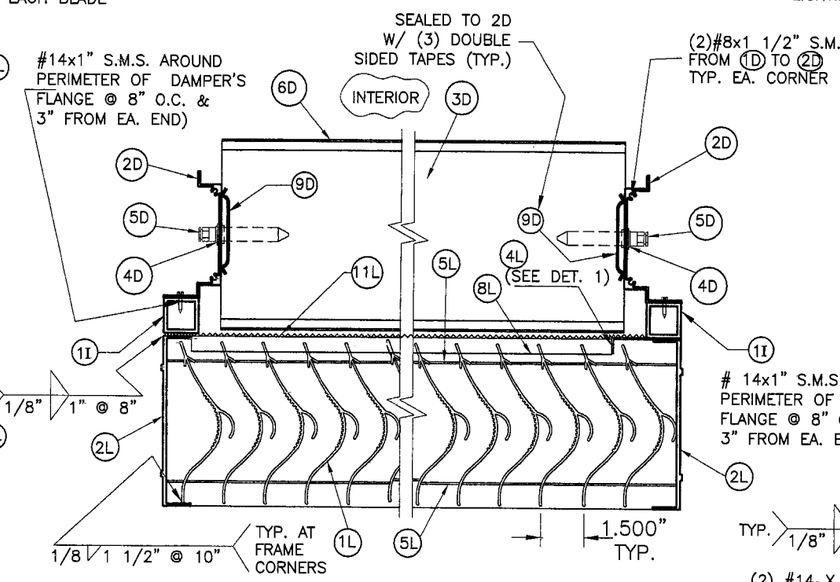

SECTION C'–C'

SCALE: 3/16"=1"

SECTION D'–D'

SCALE: 3/16"=1"

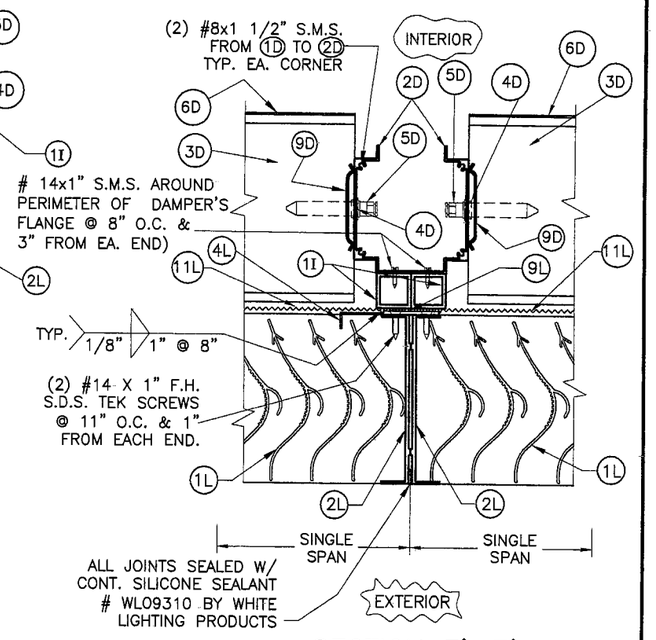

SECTION E'–E'

MULLION SPLICE

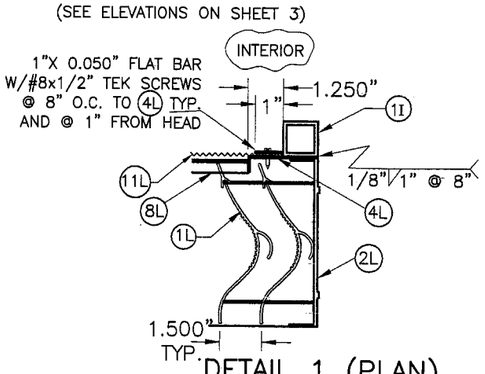

DETAIL 1 (PLAN)

1ST LOUVER BLANK–OFF LOCATION

N.T.S.

FLORIDA BUILDING CODE (High Velocity Hurricane Zone)

PRODUCT REVISED as complying with the Florida Building Code Acceptance No 12-0511.07 Expiration Date 03/18/2015 By Miami Dade Product Control Division

MIAMI–DADE COUNTY

WALTER A. TILLIT JR. LICENSE No. 44167 STATE OF FLORIDA PROFESSIONAL ENGINEER

SIGNATURE DATE

© 2010 TILTECO, INC

TILTECO INC.
TILLIT TESTING & ENGINEERING COMPANY
6355 N.W. 36th. St., Ste. 305, VIRGINIA GARDENS, Fl. 33166
Phone : (305)871-1530 . Fax : (305)871-1531
EB-0006719
WALTER A. TILLIT Jr. P.E.
FLORIDA Lic. # 44167

CARNES MODEL FRVB/FSVB.

UNITED ENERTECH, INC. VV-10-D ALUMINUM LOUVER W/ OR W/O CD-151 DAMPER ASSEMBLY

CARNES COMPANY, INC

448 S. MAIN STREET
VERONA, WI 53593
PH: (608) 845-6411 FAX: (608) 845-6470

REV. No	DESCRIPTION	DATE	REV. No	DESCRIPTION	DATE
1	OLD DWG: 07-267	05/04/10	3	–	–
2	–	–	4	–	–

DRAWN BY: M.C.V.

05/04/10 DATE

10–040 DRAWING No

SHEET 4 OF 7

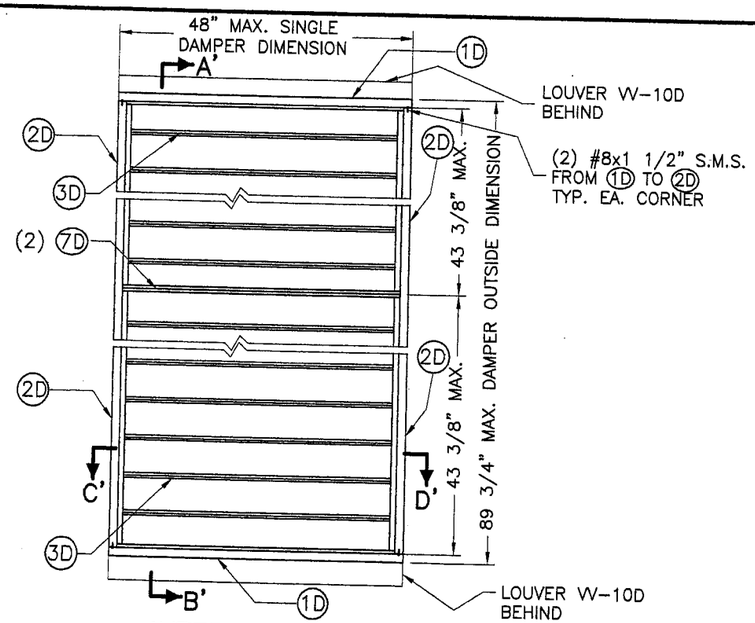

INTERIOR ELEVATION

CD-151 DAMPER SINGLE UNITS

SCALE: 1/2"=1'-0"

(1) SEE COMPONENTS ON SHEET 2.
(2) SEE SECTIONS A' THRU D' ON SHEET 4.

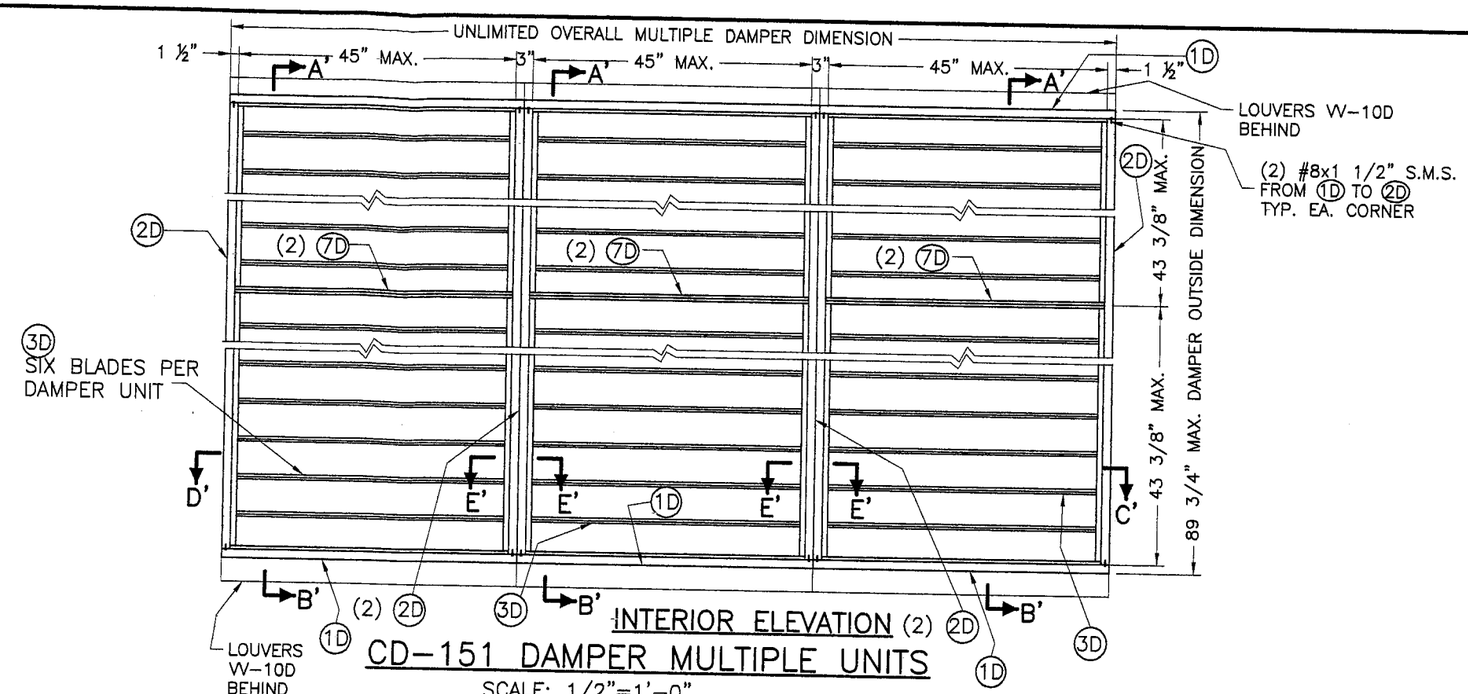

INTERIOR ELEVATION

CD-151 DAMPER MULTIPLE UNITS

SCALE: 1/2"=1'-0"

(1) SEE COMPONENTS ON SHEET 2.
(2) SEE SECTIONS A' THRU D' ON SHEET 4.

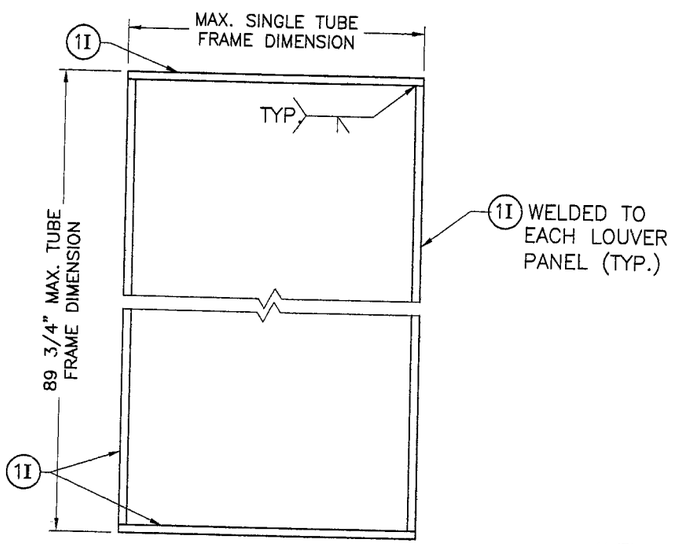

ELEVATION

INTERMEDIATE TUBE FRAME FOR CD-151 DAMPER ATTACHMENT AT SINGLE UNITS

SCALE: 1/2"=1'-0"

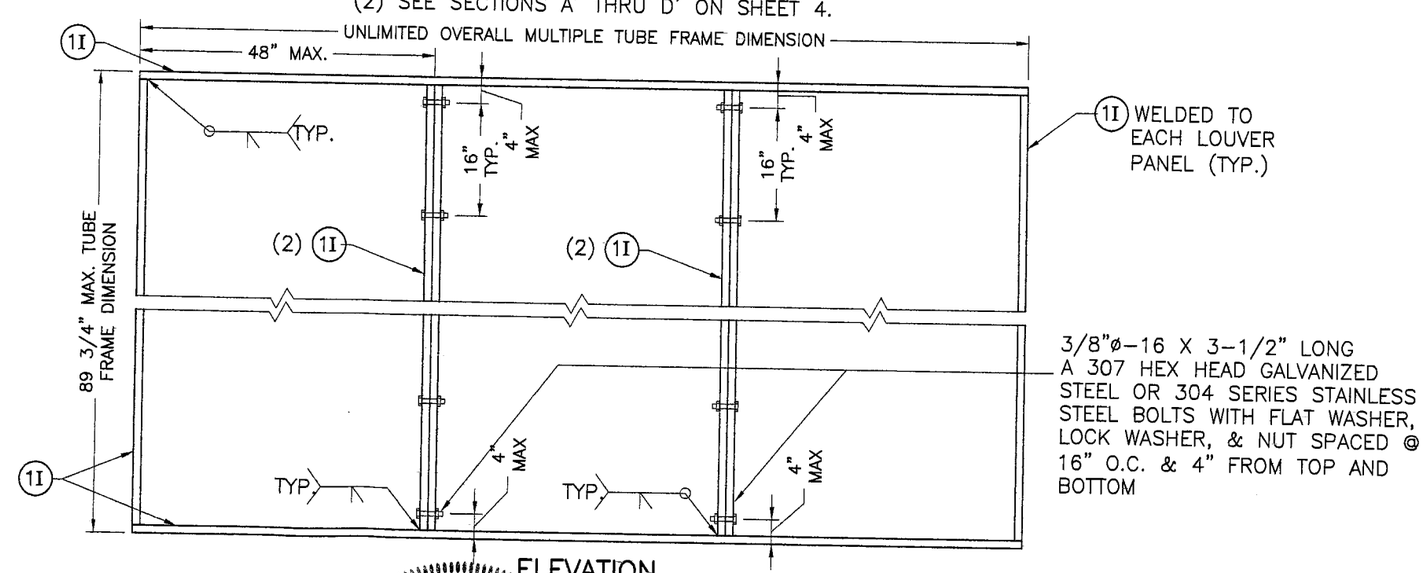

ELEVATION

INTERMEDIATE TUBE FRAME FOR CD-151 DAMPER ATTACHMENT AT MULTIPLE UNITS

SCALE: 1/2"=1'-0"

FLORIDA BUILDING CODE (High Velocity Hurricane Zone)

PRODUCT REVISED
as complying with the Florida Building Code
Acceptance No 10-0511.07
Expiration Date 09/18/2015
By
Miami Dade Product Control Division

MIAMI-DADE COUNTY

WALTER A. TILLIT JR. LICENSE No. 44167 STATE OF FLORIDA PROFESSIONAL ENGINEER

P.E. SEAL MANUFACTURER DATE

© 2010 TILTECO, INC

TILTECO INC.
TILLIT TESTING & ENGINEERING COMPANY
6355 N.W. 36th. St., Ste. 305, VIRGINIA GARDENS, Fl. 33166
Phone : (305)871-1530 . Fax : (305)871-1531
EB-0006719
WALTER A. TILLIT Jr. P.E.
FLORIDA Lic. # 44167

CARNES MODEL FRVB/FSVB.
UNITED ENERTECH, INC. VV-10-D ALUMINUM LOUVER W/ OR W/O CD-151 DAMPER ASSEMBLY

CARNES COMPANY, INC
448 S. MAIN STREET
VERONA, WI 53593
PH: (608) 845-6411 FAX: (608) 845-6470

REV. No	DESCRIPTION	DATE	REV. No	DESCRIPTION	DATE
1	OLD DWG: 07-267	05/04/10	3	–	–
2	–	–	4	–	–

DRAWN BY: M.C.V.
05/04/10 DATE
10-040 DRAWING No
SHEET 5 OF 7

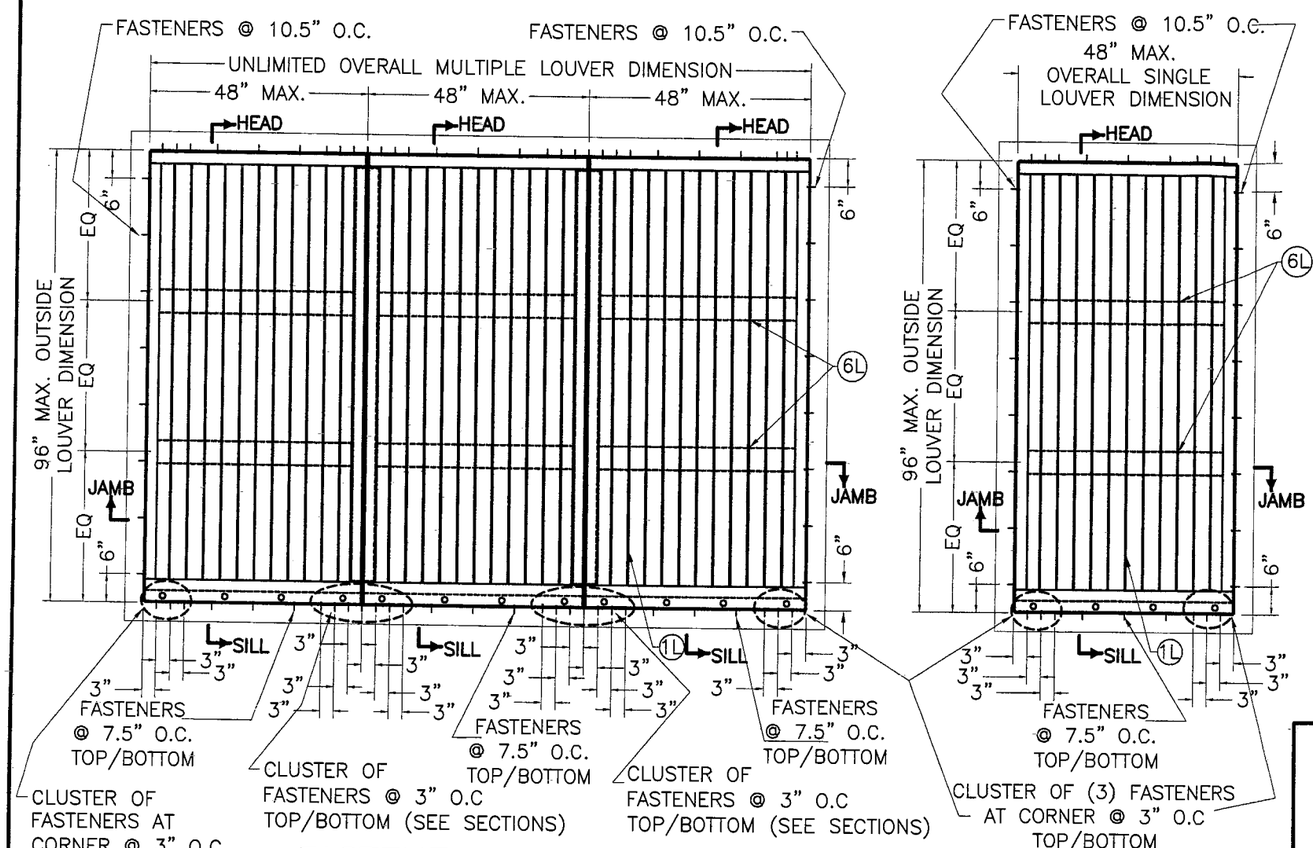

FASTENERS SPACING ELEVATIONS

(SEE FASTENERS SPECS ON GENERAL NOTE 5/1)

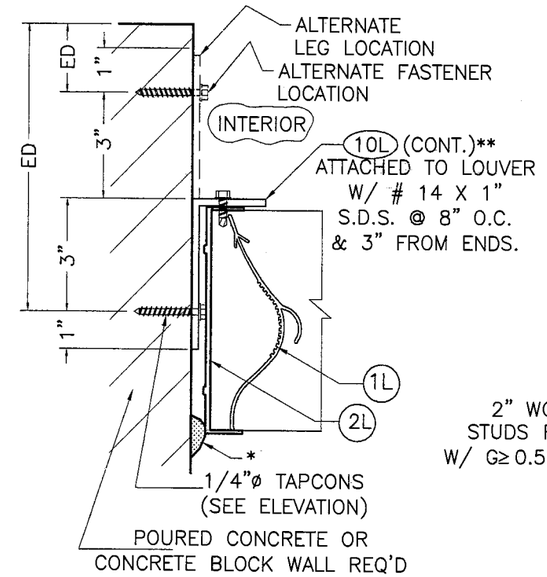

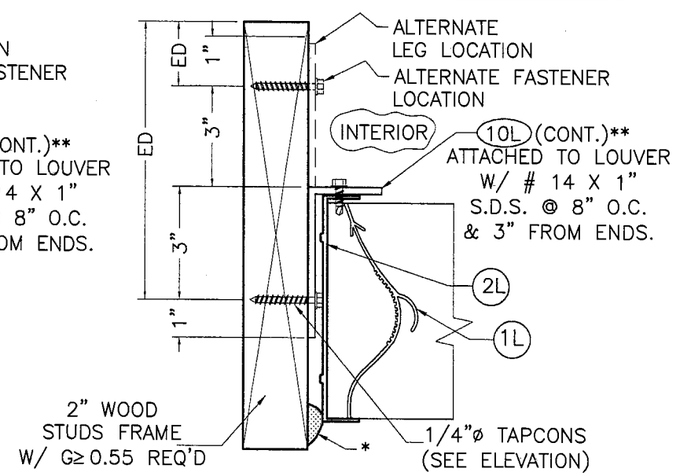

TYP. JAMB SECTIONS

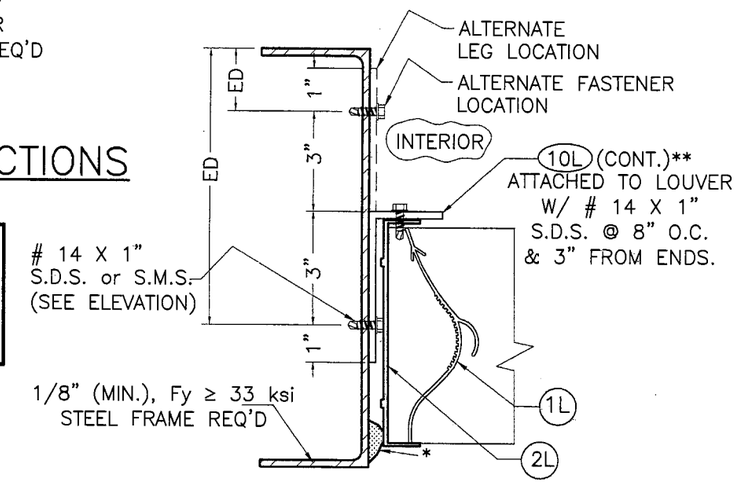

* 1/4" MAX. SHIM SPACE. PROVIDE CONT. SEALANT AT SHIM SPACE.

** SEE GENERAL NOTE 9/1

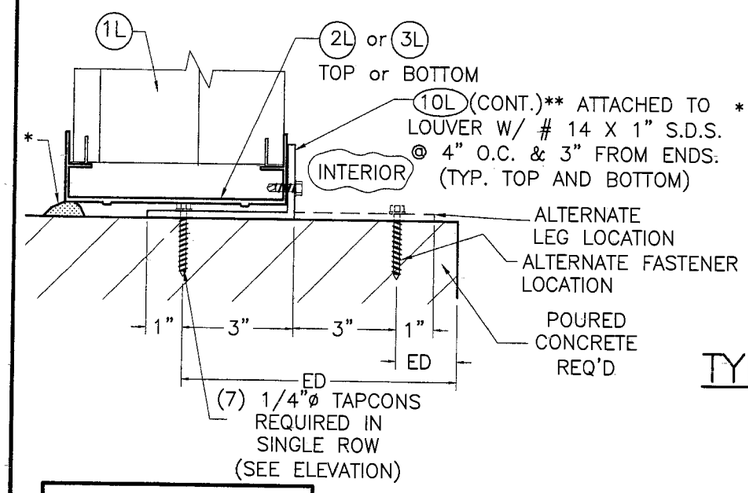

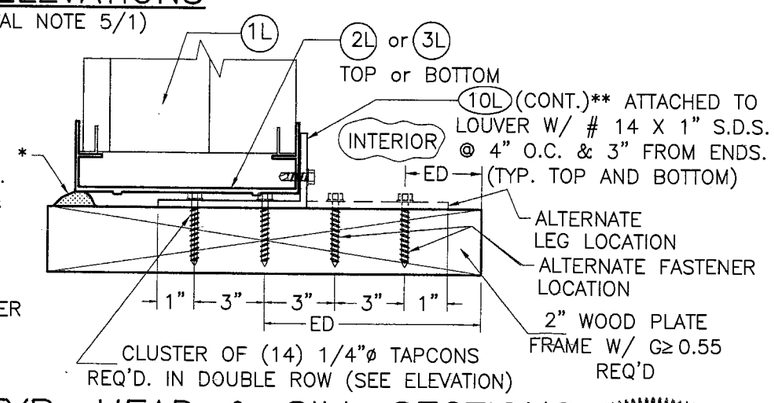

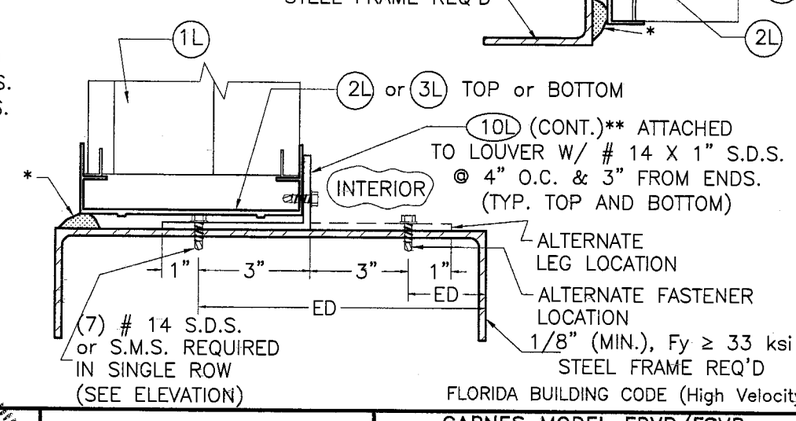

TYP. HEAD & SILL SECTIONS

ED= EDGE DISTANCE, SEE GENERAL NOTE 5/1

FLORIDA BUILDING CODE (High Velocity Hurricane Zone)

PRODUCT REVISED
as complying with the Florida Building Code
Acceptance No 10-0511.07
Expiration Date 08/18/2015
By
Miami Dade Product Control Division

MIAMI-DADE COUNTY

WALTER A. TILLIT JR. LICENSE No. 44167 STATE OF FLORIDA PROFESSIONAL ENGINEER

P.E. SEAL/SIGNATURE/DATE

© 2010 TILTECO, INC

TILTECO INC.
TILLIT TESTING & ENGINEERING COMPANY
6355 N.W. 36th. St., Ste. 305, VIRGINIA GARDENS, FL 33166
Phone : (305)871-1530 . Fax : (305)871-1531
EB-0006719
WALTER A. TILLIT Jr. P.E.
FLORIDA Lic. # 44167

CARNES MODEL FRVB/FSVB.

UNITED ENERTECH, INC. VV-10-D ALUMINUM LOUVER W/ OR W/D CD-151 DAMPER ASSEMBLY

CARNES COMPANY, INC
448 S. MAIN STREET
VERONA, WI 53593
PH: (608) 845-6411 FAX: (608) 845-6470

REV. No	DESCRIPTION	DATE	REV. No	DESCRIPTION	DATE
1	OLD DWG: 07-267	05/04/10	3	–	–
2	–	–	4	–	–

DRAWN BY: M.C.V.

05/04/10 DATE

10-040 DRAWING No

SHEET 6 OF 7

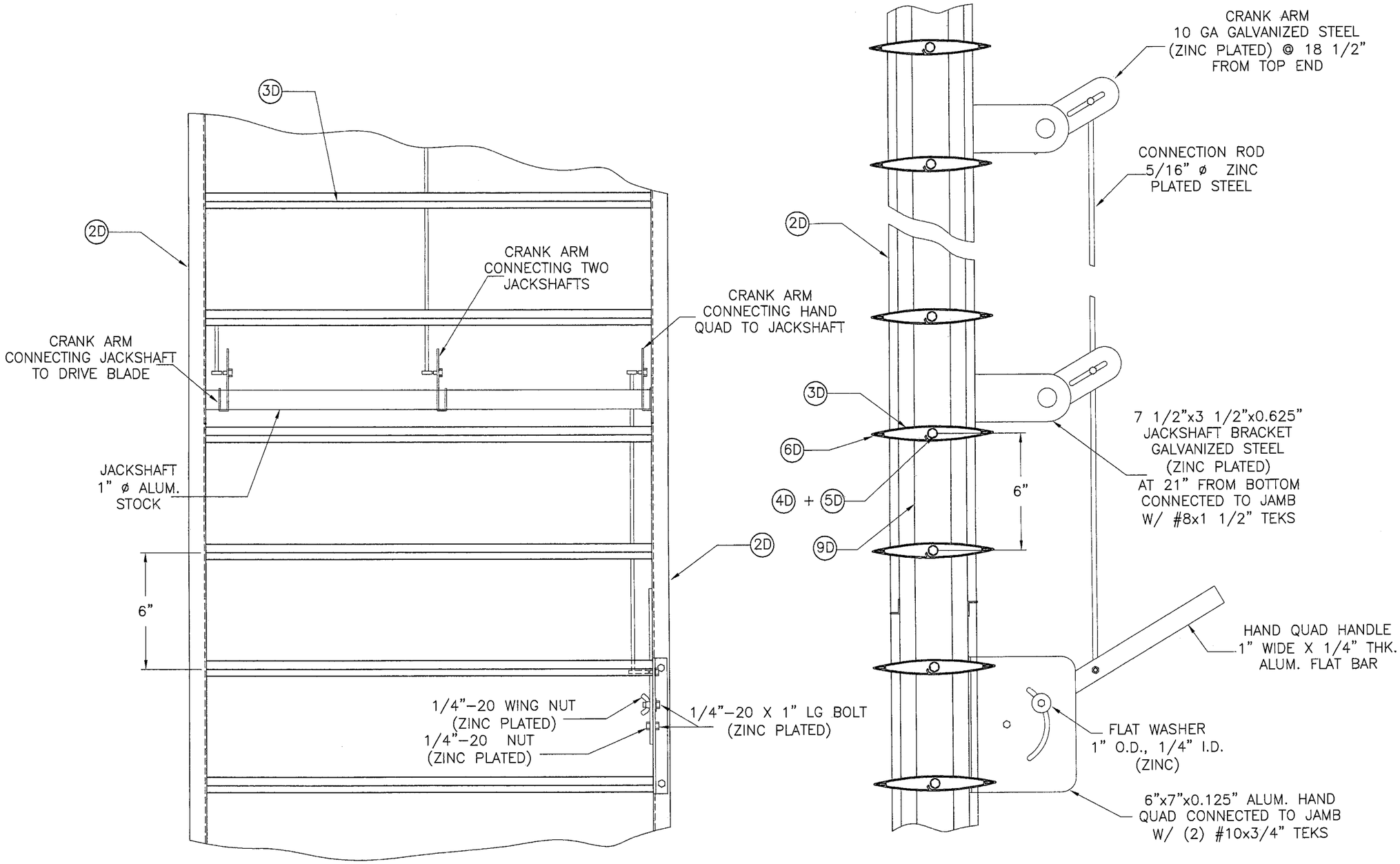

HAND QUADRANT HANDLE MECHANISM

FLORIDA BUILDING CODE (High Velocity Hurricane Zone)

(SEE GENERAL NOTE 8/1)

PRODUCT REVISED
as complying with the Florida Building Code
Acceptance No 10-0511.07
Expiration Date 09/10/2015
By
Miami Dade Product Control Division

MIAMI-DADE COUNTY

WALTER A. TILLIT JR. LICENSE No. 44167 STATE OF FLORIDA PROFESSIONAL ENGINEER

P.E. SEAL, SIGNATURE, DATE

© 2010 TILTECO, INC

TILTECO INC.
TILLIT TESTING & ENGINEERING COMPANY
6355 N.W. 36th. St., Ste. 305, VIRGINIA GARDENS, Fl. 33166
Phone : (305)871-1530 . Fax : (305)871-1531
EB-0006719
WALTER A. TILLIT Jr. P.E.
FLORIDA Lic. # 44167

CARNES MODEL FRVB/FSVB.
UNITED ENERTECH, INC. VV-10-D ALUMINUM LOUVER W/ OR W/O CD-151 DAMPER ASSEMBLY

CARNES COMPANY, INC
448 S. MAIN STREET
VERONA, WI 53593
PH: (608) 845-6411 FAX: (608) 845-6470

REV. No	DESCRIPTION	DATE	REV. No	DESCRIPTION	DATE
1	OLD DWG: 07-267	05/04/10	3	–	–
2	–	–	4	–	–

DRAWN BY: M.C.V.
05/04/10 DATE
10-040 DRAWING No
SHEET 7 OF 7