MIAMI-DADE COUNTY

BUILDING CODE COMPLIANCE OFFICE (BCCO)
PRODUCT CONTROL DIVISION

MIAMI-DADE COUNTY, FLORIDA
METRO-DADE FLAGLER BUILDING
140 WEST FLAGLER STREET, SUITE 1603
MIAMI, FLORIDA 33130-1563
(305) 375-2901 FAX (305) 375-2908
www.buildingcodeonline.com

NOTICE OF ACCEPTANCE (NOA)

Owens Corning
One Owens Corning Parkway
Toledo, OH 43659

SCOPE:

This NOA is being issued under the applicable rules and regulations governing the use of construction materials. The documentation submitted has been reviewed by Miami-Dade County Product Control Division and accepted by the Board of Rules and Appeals (BORA) to be used in Miami Dade County and other areas where allowed by the Authority Having Jurisdiction (AHJ).

This NOA shall not be valid after the expiration date stated below. The Miami-Dade County Product Control Division (In Miami Dade County) and/or the AHJ (in areas other than Miami Dade County) reserve the right to have this product or material tested for quality assurance purposes. If this product or material fails to perform in the accepted manner, the manufacturer will incur the expense of such testing and the AHJ may immediately revoke, modify, or suspend the use of such product or material within their jurisdiction. BORA reserves the right to revoke this acceptance, if it is determined by Miami-Dade County Product Control Division that this product or material fails to meet the requirements of the applicable building code.

This product is approved as described herein, and has been designed to comply with the Florida Building Code, including the High Velocity Hurricane Zone.

DESCRIPTION: VentSure Low Profile Slant Back Roof Vent with Exterior Louver

LABELING: Each unit shall bear a permanent label with the manufacturer's name or logo, city, state and following statement: "Miami-Dade County Product Control Approved", unless otherwise noted herein.

RENEWAL of this NOA shall be considered after a renewal application has been filed and there has been no change in the applicable building code negatively affecting the performance of this product.

TERMINATION of this NOA will occur after the expiration date or if there has been a revision or change in the materials, use, and/or manufacture of the product or process. Misuse of this NOA as an endorsement of any product, for sales, advertising or any other purposes shall automatically terminate this NOA. Failure to comply with any section of this NOA shall be cause for termination and removal of NOA.

ADVERTISEMENT: The NOA number preceded by the words Miami-Dade County, Florida, and followed by the expiration date may be displayed in advertising literature. If any portion of the NOA is displayed, then it shall be done in its entirety.

INSPECTION: A copy of this entire NOA shall be provided to the user by the manufacturer or its distributors and shall be available for inspection at the job site at the request of the Building Official.

This revises NOA# 05-0523.01 and consists of pages 1 through 5.
The submitted documentation was reviewed by Alex Tigera.

MIAMI-DADE COUNTY APPROVED

ROOFING ASSEMBLY APPROVAL

Category: Roofing
Sub-Category: 07720 Static Roof Vent
Materials: Steel

TRADE NAMES OF PRODUCTS MANUFACTURED OR LABELED BY APPLICANT:

Product	Dimensions	Test Specification	Product Description
Ventsure Low Profile Slant Back Roof Vent with Exterior Louver	Vent : 2-3/16" x 18" x 24" Deck Flange: 23" x 32" Thickness: 0.0217 inch.	TAS 100	Galvanized metal roof vent

MANUFACTURING LOCATION:

1. Rohnert Park, CA.

EVIDENCE SUBMITTED:

Test Agency/Identifier	Name	Report	Date
PRI Asphalt Technologies, Inc..	TAS 100	OHI-007-02-01	11/06/03

APPROVED APPLICATIONS:

Deck Type: Wood

Deck Description: $^{19}/_{32}$" or greater plywood or wood plank

System Type A: Mechanical attachment of vent for shingle roofs

Cutout: Mark a 11" x 11" opening centered between layout lines and aligned approximately 18 inches from the ridge, and as seen in Detail "A". Set blade to thickness of sheathing and cut opening. Brush away sawdust and debris.

Installation: Vents should be evenly spaced on the rear slope of the roof.

Center vent in opening and set it in a ¼" thick by 3" wide bed of asphalt roofing cement. Secure vent to the roof deck with 1-¼" x 3/8" galvanized ring shank roofing nails spaced approx. 4" o.c. and 1" from the outside edge of the flange (See Detail "B" herein). Use a minimum of 18 nails per vent. Seal all nails and vent flange with an approved ASTM D 4586 roofing cement.

After vent is secured install baffle in a ¼" thick bed of asphalt roofing cement, and secured with 1-¼" x 3/8" galvanized ring shank roofing nails spaced 8" o.c. for a total of 3 nails. Seal all nails with an approved ASTM D 4586 roofing cement.

Net Free Area: Refer to manufacturers published literature

LIMITATIONS:

1. Refer to applicable building code for required ventilation.
2. The installation shall be applied in compliance with the manufacturer's current published application instruction and the requirements set forth in applicable building code.
3. This acceptance is for installations over asphaltic shingle roofs only.
4. Ovens Corning Ventsure Low Profile Slant Back Roof Vent with Exterior Louver shall not be installed on roof mean heights greater than 33 feet.
5. All products listed herein shall have a quality assurance audit in accordance with the Florida Building Code and Rule 9B-72 of the Florida Administrative Code.
6. All approved products listed herein shall be labeled and shall bear the imprint or identifiable marking of the manufacturer's name or logo and following statement: "Miami-Dade County Product Control Approved" or the Miami-Dade County Product Control Seal as shown below

MIAMI-DADE COUNTY APPROVED

DETAIL "A"

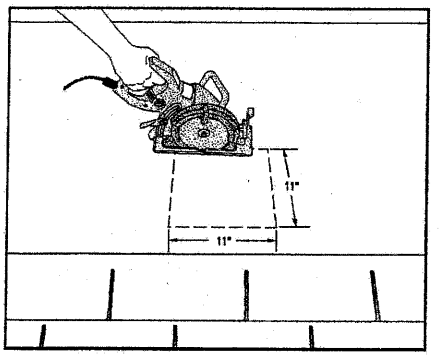

1. CUT & MARK A 11 inch x 11 inch hole in the roof deck. (Note: Set blade to thickness of the sheathing.)

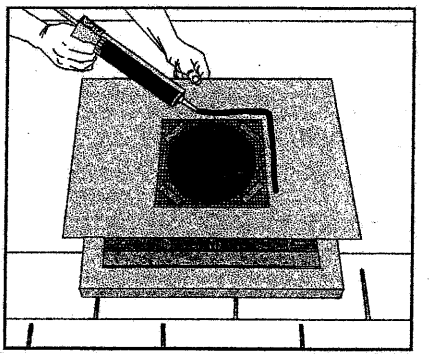

2. SEAL Flanges with mastic.

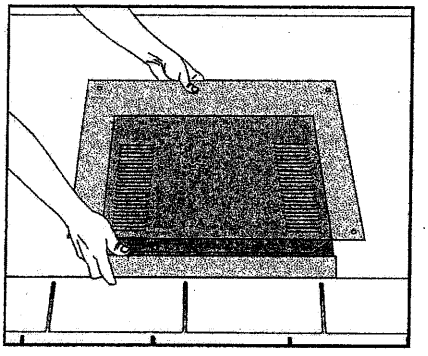

3. PLACE Place vent directly over the 11 inch x 11 inch hole.

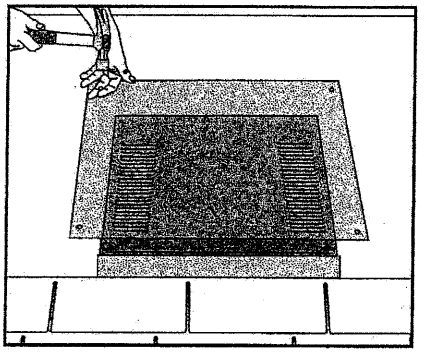

4. SECURE At 4-inch centers using roofing nails of sufficient length to penetrate sheathing.

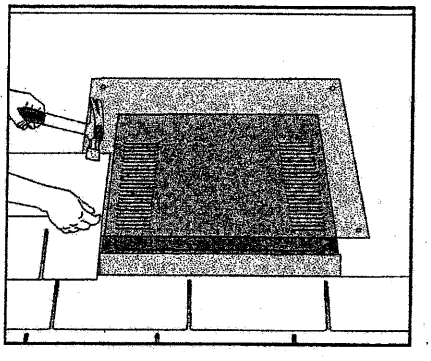

5. COVER Apply shingles around vent.

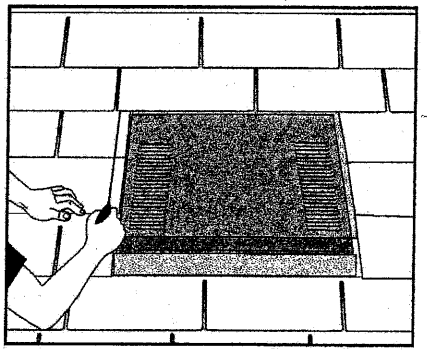

6. TRIM Cut shingles back 1 inch on top and sides of vent cover to allow for proper drainage.

Detail "B"

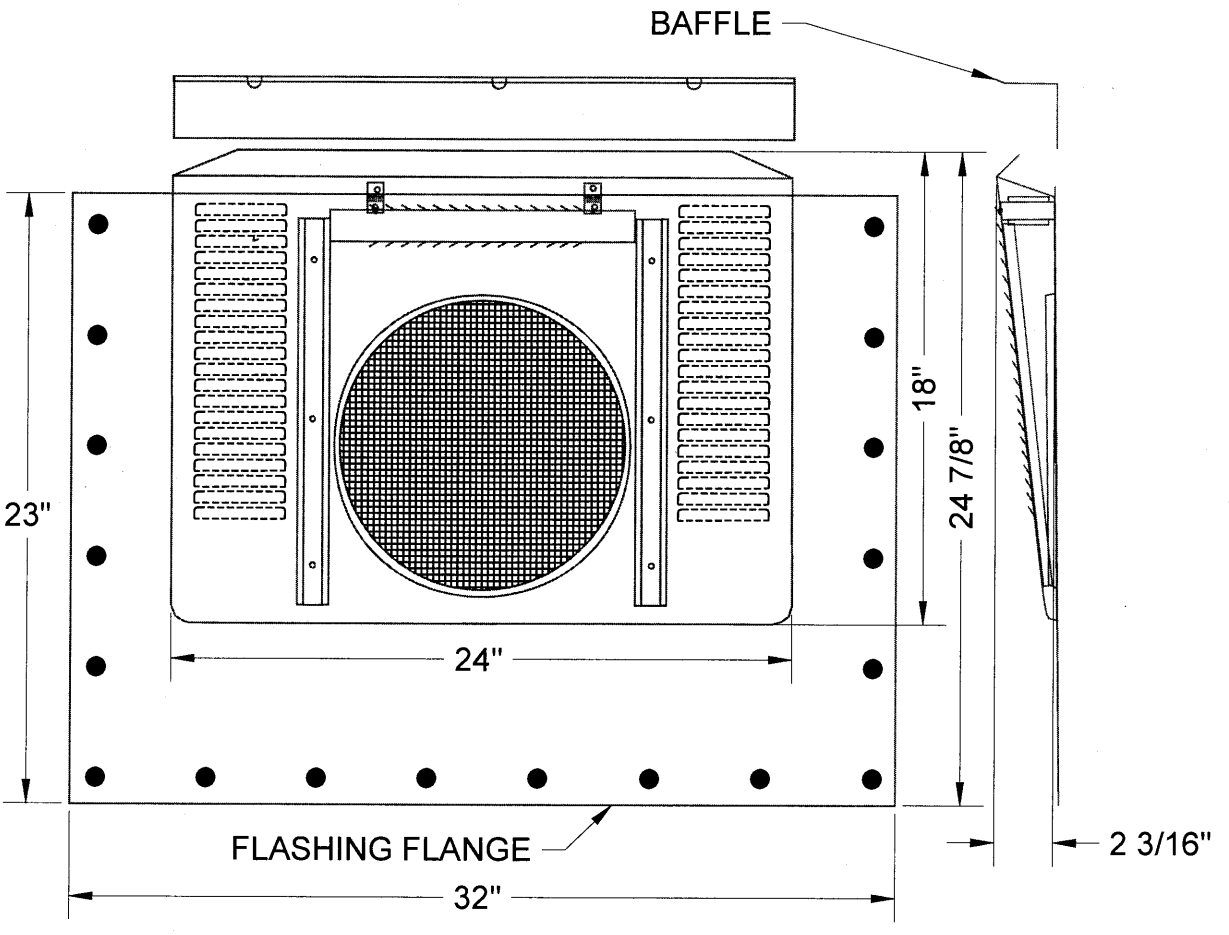

END OF THIS ACCEPTANCE