MIAMI-DADE COUNTY
BUILDING CODE COMPLIANCE OFFICE (BCCO)
PRODUCT CONTROL DIVISION

MIAMI–DADE COUNTY, FLORIDA
METRO–DADE FLAGLER BUILDING
140 WEST FLAGLER STREET, SUITE 1107
MIAMI, FLORIDA 33130–1563
(305) 375–2902 FAX (305) 372–6339
www.miamidade.GOV/buildingcode

NOTICE OF ACCEPTANCE (NOA)

Universal Impact Windows & Doors, Inc.
1675 W. 31ST Place
Hialeah, FL 33012

SCOPE:

This NOA is being issued under the applicable rules and regulations governing the use of construction materials. The documentation submitted has been reviewed by Miami–Dade County Product Control Division and accepted by the Board of Rules and Appeals (BORA) to be used in Miami–Dade County and other areas where allowed by the Authority Having Jurisdiction (AHJ).

This NOA shall not be valid after the expiration date stated below. The Miami–Dade County Product Control Division (In Miami–Dade County) and/or the AHJ (in areas other than Miami–Dade County) reserve the right to have this product or material tested for quality assurance purposes. If this product or material fails to perform in the accepted manner, the manufacturer will incur the expense of such testing and the AHJ may immediately revoke, modify, or suspend the use of such product or material within their jurisdiction. BORA reserves the right to revoke this acceptance, if it is determined by Miami–Dade County Product Control Division that this product or material fails to meet the requirements of the applicable building code.

This product is approved as described herein, and has been designed to comply with the Florida Building Code, including the High Velocity Hurricane Zone.

DESCRIPTION: Series "Rebecca" 7'9" Outswing Glazed Aluminum French Door With (2) Surface bolts (Active Panel) – L.M.I.

APPROVAL DOCUMENT: Drawing No. **W04–81**, titled "Series Rebecca Alum. Outswing French Door (L.M.I.)", sheets 1 through 5 of 5, dated 09/13/04 with revision "**B**" dated 04/05/10, prepared by Al–Farooq Corporation, signed and sealed by Javad Ahmad, P. E., bearing the Miami–Dade County Product Control Renewal stamp with the Notice of Acceptance number and Expiration date by the Miami–Dade County Product Control Division.

MISSILE IMPACT RATING: Large and Small Missile Impact Resistant.

LABELING: Each unit shall bear a permanent label with the manufacturer's name or logo, city, state and following statement: "Miami–Dade County Product Control Approved", unless otherwise noted herein.

REVISION of this NOA shall be considered after a renewal application has been filed and there has been no change in the applicable building code negatively affecting the performance of this product.

TERMINATION of this NOA will occur after the expiration date or if there has been a revision or change in the materials, use, and/or manufacture of the product or process. Misuse of this NOA as an endorsement of any product, for sales, advertising or any other purposes shall automatically terminate this NOA. Failure to comply with any section of this NOA shall be cause for termination and removal of NOA.

ADVERTISEMENT: The NOA number preceded by the words Miami–Dade County, Florida, and followed by the expiration date may be displayed in advertising literature. If any portion of the NOA is displayed, then it shall be done in its entirety.

INSPECTION: A copy of this entire NOA shall be provided to the user by the manufacturer or its distributors and shall be available for inspection at the job site at the request of the Building Official.

An original signed and sealed company letter from Universal Impact Windows & Doors, Inc. is required, providing that the Outswing French Door was purchased from them to order this NOA to be valid on any job.

This NOA **renews NOA No. 05–00104.04** and consists of this page 1, evidence pages E–1 and E–2, as well as approval document mentioned above.

The submitted documentation was reviewed by **Jaime D. Gascon, P. E.**

MIAMI-DADE COUNTY APPROVED

J. Gascon
6/3/10

NOA No. 10–0518.06
Expiration Date: May19, 2015
Approval Date: June 23, 2010

Universal Impact Windows & Doors, Inc.

NOTICE OF ACCEPTANCE: EVIDENCE SUBMITTED

A. DRAWINGS

1. Manufacturer's die drawings and sections.
2. Drawing No **W04–81**, titled "Series Rebecca Alum. Outswing French Door (L.M.I.)", sheets 1 through 5 of 5, dated 09/13/04 with revision "**B**" dated 04/05/10, prepared by Al–Farooq Corporation, signed and sealed by Javad Ahmad, P. E.

B. TESTS

1. Test reports on: 1) Air Infiltration Test, per FBC, TAS 202–94
   2) Uniform Static Air Pressure Test, Loading per FBC TAS 202–94
   3) Water Resistance Test, per FBC, TAS 202–94
   4) Large Missile Impact Test per FBC, TAS 201–94
   5) Cyclic Wind Pressure Loading per FBC, TAS 203–94
   6) Forced Entry Test, per FBC 2411 3.2.1, TAS 202–94

   along with marked–up drawings and installation diagram of outswing double French doors prepared by Fenestration Testing Laboratories, Inc., Test Report **FTL–4330** dated September 14, 2004, signed and sealed by Edmundo Largaespada, P. E.
   (Submitted under previous NOA No.05–0104.04)

C. CALCULATIONS

1. Anchor verification calculations and structural analysis, complying with FBC–2007, prepared by Al–Farooq Corporation, dated 04/01/10, signed and sealed by Javad Ahmad, P. E.
   Complies with ASTM E1300–02/ 04

D. QUALITY ASSURANCE

1. Miami–Dade Building Code Compliance Office (BCCO).

E. MATERIAL CERTIFICATIONS

1. Notice of Acceptance No. **09–0312.03** issued to E.I. DuPont DeNemours & Co., Inc. for their "**DuPont Sentry Glass® Interlayer**" dated 05/13/09, expiring on 01/14/12.
2. Notice of Acceptance No. **08–0709.04** issued to Glasslam N.G.I., Inc. for their **"Safety-Plus II Laminated Glass**" dated 09/11/08, expiring on 08/07/13.
3. Notice of Acceptance No. **06–0216.06** issued to Solutia Inc. for their "**Saflex IIIG Clear or colored interlayer**" dated 05/04/06, expiring on 05/21/11.

F. STATEMENTS

1. Statement letter of conformance, no financial interest and compliance with the FBC–2007, dated April 30, 2010, signed and sealed by Javad Ahmad, P. E.

Jaime D. Gascon, P. E.
Chief, Product Control Division
NOA No. 10–0518.06
Expiration Date: May19, 2015
Approval Date: June 23, 2010

NOTICE OF ACCEPTANCE: EVIDENCE SUBMITTED

F. STATEMENTS (CONTINUED)

2. Laboratory compliance letter for Test Report No. **FTL–4330**, issued by Fenestration Testing Laboratories, Inc., dated September 14, 2004, signed and sealed by Edmundo Largaespada, P. E.
(Submitted under previous NOA No.05 –0104.04)

G. OTHERS

1. Notice of Acceptance No. **05–0104.04**, issued to Universal Impact Windows & Doors, Inc. for their Series "Rebecca Outswing Aluminum French Door w/ (2)–surface bolts (active panel)", approved on 05/19/05 and expiring on 05/19/10.

Jaime D. Gascon, P. E.
Chief, Product Control Division
NOA No. 10–0518.06
Expiration Date: May19, 2015
Approval Date: June 23, 2010

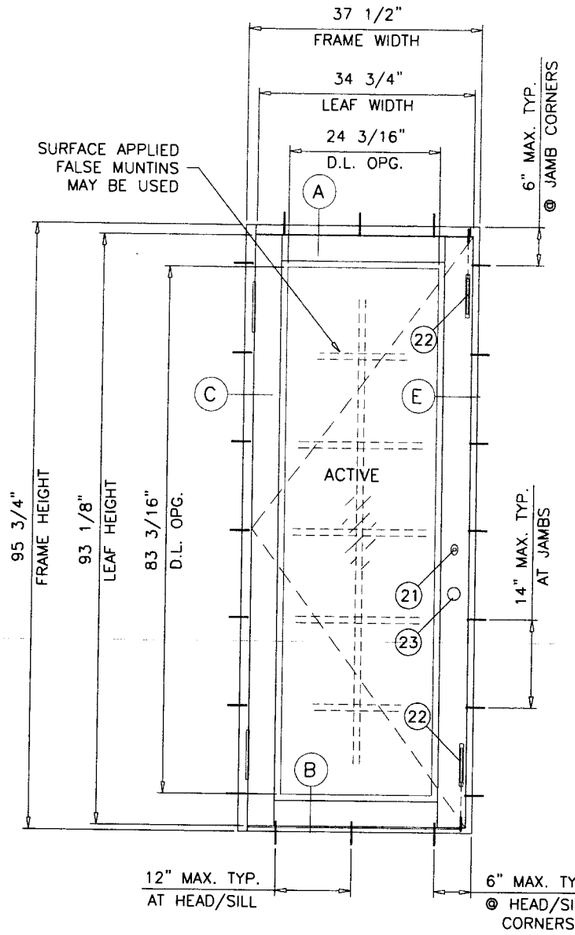

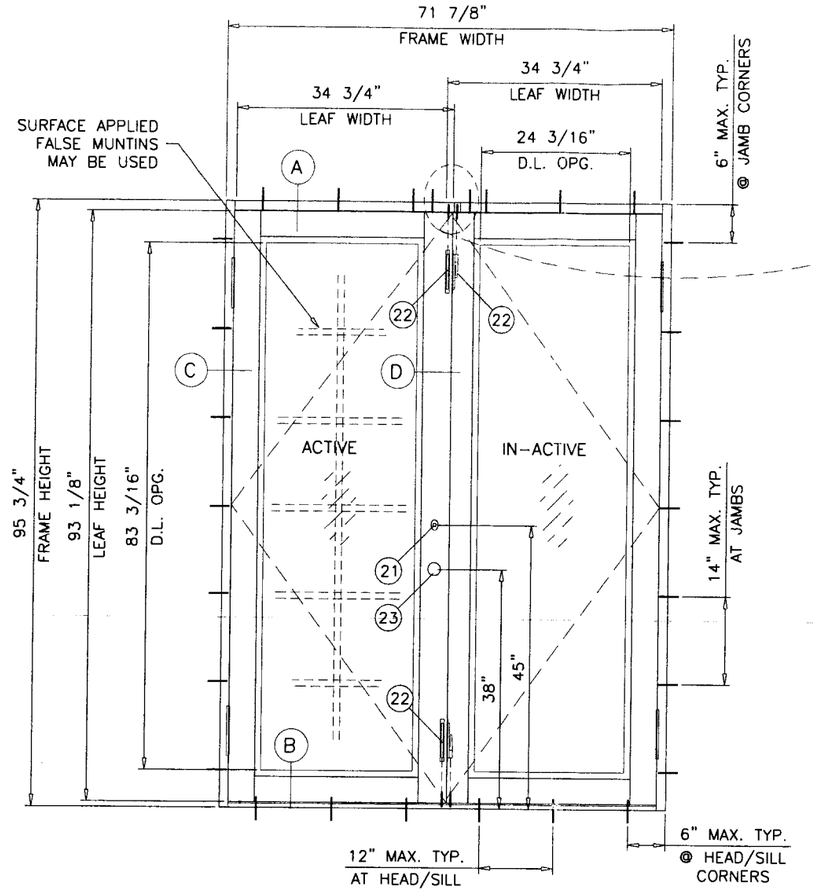

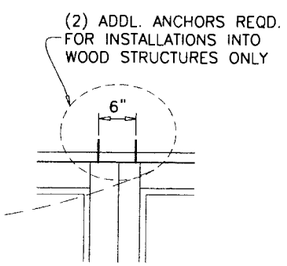

TYPICAL ELEVATION
(XX)
TESTED UNIT

NOTE:
TOP & BOTTOM FLUSH BOLTS OF ACTIVE AND INACTIVE LEAF TO BE ENGAGED DURING PERIODS OF HURRICANE WARNING.

THESE DOORS ARE RATED FOR LARGE & SMALL MISSILE IMPACT. SHUTTERS ARE NOT REQUIRED.

SERIES REBECCA
ALUMINUM OUTSWING FRENCH DOOR

APPROVAL APPLIES TO SINGLE UNITS OR SIDE BY SIDE COMBINATIONS OF FRENCH DOOR/FRENCH DOOR OR FRENCH DOOR WITH OTHER GLAZING PRODUCTS USING MIAMI-DADE COUNTY APPROVED MULLIONS IN BETWEEN.
LOWER DESIGN PRESSURE FROM DOOR APPROVAL, MULLION OR GLAZING PRODUCT APPROVAL WILL APPLY TO ENTIRE SYSTEM.

THIS PRODUCT HAS BEEN DESIGNED AND TESTED TO COMPLY WITH THE REQUIREMENTS OF THE FLORIDA BUILDING CODE 2007 EDITION INCLUDING HIGH VELOCITY HURRICANE ZONE (HVHZ).

WOOD BUCKS BY OTHERS, MUST BE ANCHORED PROPERLY TO TRANSFER LOADS TO THE STRUCTURE.

ANCHORS SHALL BE AS LISTED, SPACED AS SHOWN ON DETAILS, ANCHORS EMBEDMENT TO BASE MATERIAL SHALL BE BEYOND WALL DRESSING OR STUCCO.

ANCHORING OR LOADING CONDITIONS NOT SHOWN IN THESE DETAILS ARE NOT PART OF THIS APPROVAL.

A LOAD DURATION INCREASE IS USED IN DESIGN OF ANCHORS INTO WOOD ONLY.

MATERIALS INCLUDING BUT NOT LIMITED TO STEEL/METAL SCREWS, THAT COME INTO CONTACT WITH OTHER DISSIMILAR MATERIALS SHALL MEET THE REQUIREMENTS OF 2007 FLORIDA BLDG. CODE SECTION 2003.8.4.

MAXIMUM DESIGN LOAD RATING = + 85.0 PSF
(FOR SIZES SHOWN ABOVE OR SMALLER) − 85.0 PSF

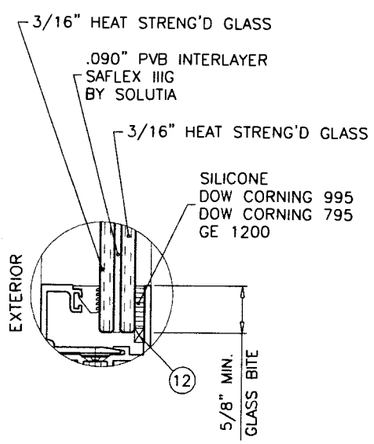

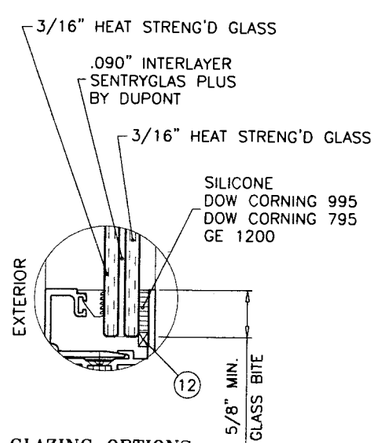

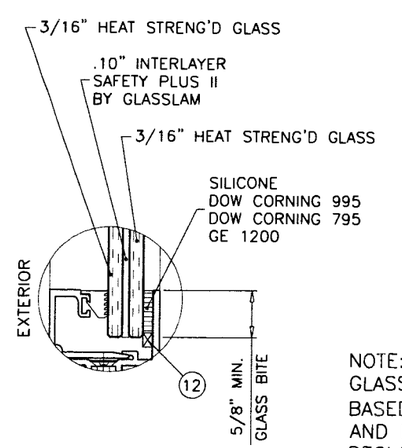

GLAZING OPTIONS

NOTE:
GLASS CAPACITIES ON THIS SHEET ARE BASED ON ASTM E1300-04 (3 SEC. GUSTS) AND FLORIDA BUILDING COMMISSION DECLARATORY STATEMENT DCA05-DEC-219

Engr: JAVAD AHMAD
CIVIL
FLA. PE # 70592
C.A.N. 3538

APR 21 2010

PRODUCT RENEWED
as complying with the Florida Building Code
Acceptance No 10-0518.06
Expiration Date 03/19/2015
By
Miami Dade Product Control Division

AL-FAROOQ CORPORATION
ENGINEERS & PRODUCT DEVELOPMENT
1235 S.W. 87 AVE
MIAMI, FLORIDA 33174
TEL. (305) 264-8100 FAX. (305) 262-6978
COMP-ANL\W04-81UAW

UNIVERSAL IMPACT WINDOWS & DOORS
1675 W. 31ST PLACE
HIALEAH, FL. 33012
TEL. (305) 825-7900 FAX (305) 825-5805

SERIES REBECCA ALUM OUTSWING FRENCH DOOR (L.M.I.)

revisions:			
no	date	by	description
A	04.27.05		REV. PER BCCO COMMENTS
B	04.05.10		UPDATED TO 2007 FBC

date: 09-13-04
scale: 3/8" = 1"
dr. by: HAMID
chk. by:

drawing no.
W04-81

sheet 1 of 5

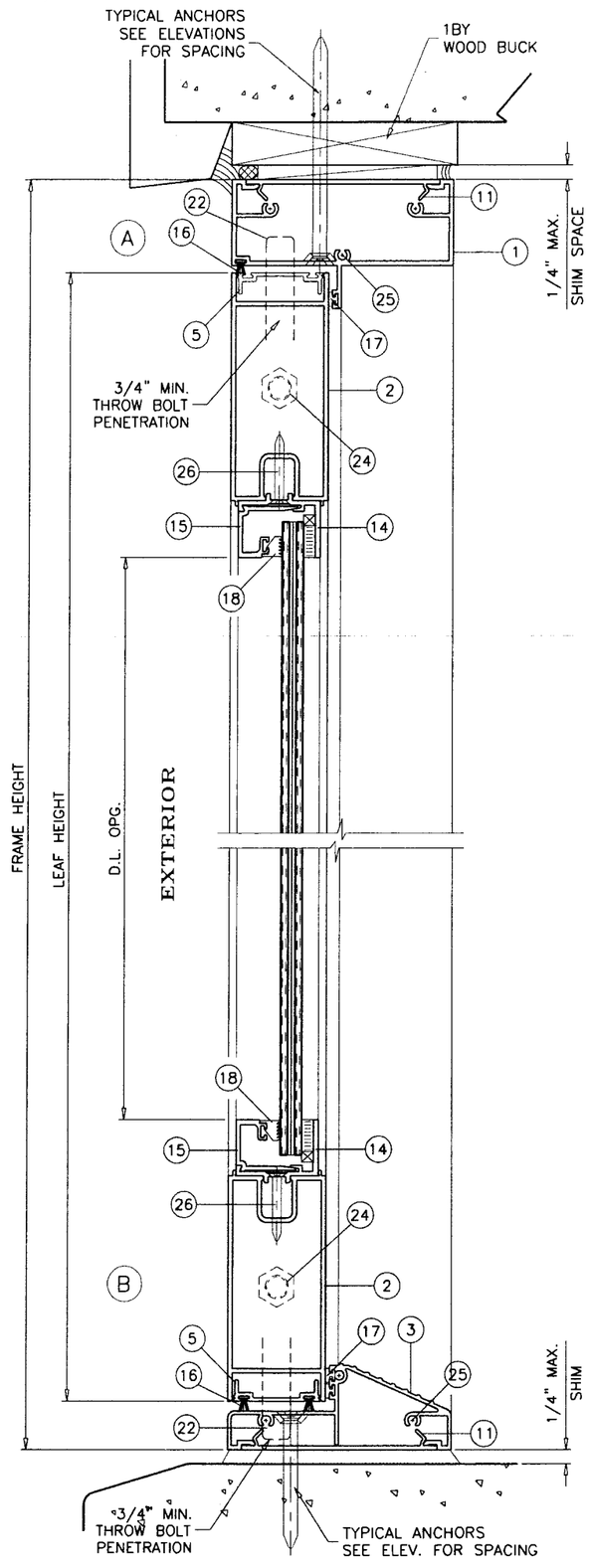

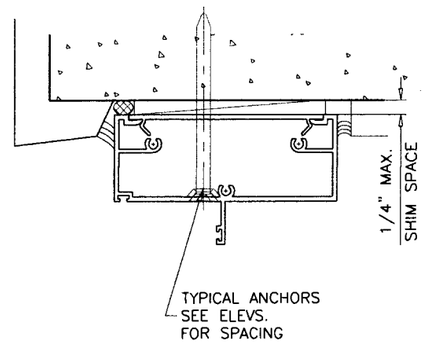

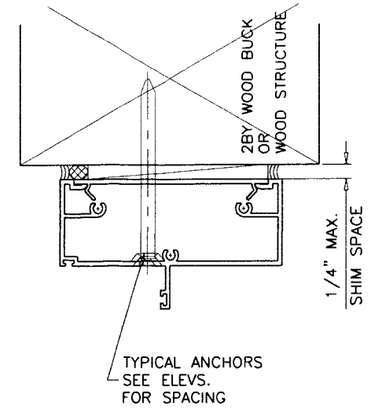

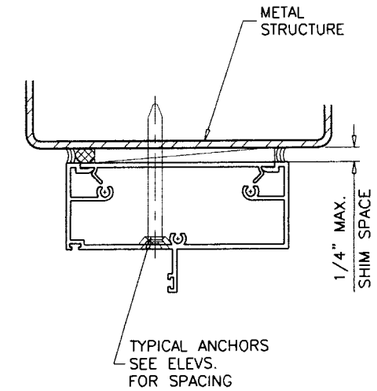

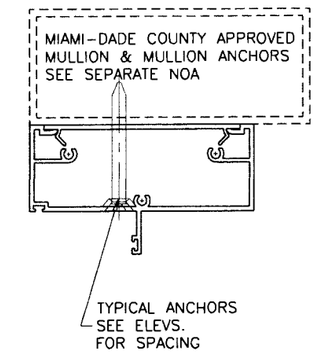

WOOD BUCKS AND METAL STRUCTURE NOT BY UNIVERSAL MUST SUSTAIN LOADS IMPOSED BY GLAZING SYSTEM AND TRANSFER THEM TO THE BUILDING STRUCTURE.

SEALANTS:

FRAME CORNERS, ASSEMBLY SCREWS AND HEADS OF ANCHOR SCREWS AT SILL TO BE SEALED WITH SEALER. LEAF JOINTS SEALED WITH SILICONE.

LOCKS:

METALLIC DEAD BOLT LOCK, KEY OPERATED ON EXTERIOR AND THUMB TURN ON INTERIOR AT ACTIVE LEAF LOCK STILE, 45" FROM BOTTOM.

DOOR HANDLE AT 38" FROM BOTTOM.

MANUALLY OPERATED CONCEALED FLUSH BOLTS AT TOP & BOTTOM OF ACTIVE AND INACTIVE LEAF. (MUST BE ENGAGED DURING PERIODS OF HURRICANE WARNING)

TYPICAL ANCHORS: SEE ELEV. FOR SPACING

1/4" DIA. ULTRACON BY 'ELCO' (Fu=177 KSI, Fy=155 KSI)

INTO 2BY WOOD BUCKS OR WOOD STRUCTURES
1-3/8" MIN. PENETRATION INTO WOOD

THRU 1BY BUCKS INTO CONC. OR MASONRY
1-1/4" MIN. EMBED INTO CONC. OR MASONRY

DIRECTLY INTO CONC. OR MASONRY
1-1/4" MIN. EMBED INTO CONC. OR MASONRY

#14 SMS OR SELF DRILLING SCREWS (GRADE 2 CRS)

INTO MIAMI-DADE COUNTY APPROVED MULLIONS (MIN. THK. = 1/8")

INTO METAL STRUCTURES
STEEL : 12 GA. MIN. (Fy = 36 KSI MIN.)
ALUMINUM : 1/8" THK. MIN. (6063-T5 MIN.)
(STEEL IN CONTACT WITH ALUMINUM TO BE PLATED OR PAINTED)

TYPICAL EDGE DISTANCE

INTO CONCRETE AND MASONRY = 2-1/2" MIN.
INTO WOOD STRUCTURE = 1" MIN.
INTO METAL STRUCTURE = 3/4" MIN.

CONCRETE AT HEAD, SILL OR JAMBS f'c = 3000 PSI MIN.
C-90 HOLLOW/FILLED BLOCK AT JAMBS f'm = 2000 PSI MIN.

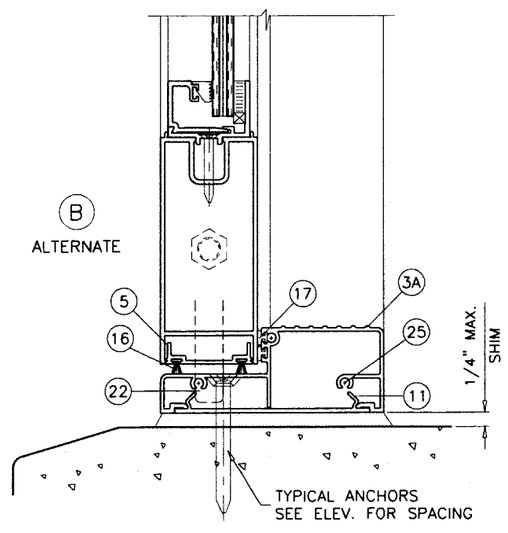

Engr: JAVAD AHMAD
CIVIL
FLA. PE # 70592
C.A.N. 3538

APR 2 1 2010

PRODUCT RENEWED
as complying with the Florida
Building Code
Acceptance No 10-0518.06
Expiration Date 05/19/2015
By
Miami Dade Product Control
Division

AL-FAROOQ CORPORATION
ENGINEERS & PRODUCT DEVELOPMENT
1235 S.W. 87 AVE
MIAMI, FLORIDA 33174
TEL. (305) 264-8100 FAX. (305) 262-6978
COMP-ANL\W04-81UAW

SERIES REBECCA ALUM OUTSWING FRENCH DOOR (L.M.I.)

UNIVERSAL IMPACT WINDOWS & DOORS
1675 W. 31ST PLACE
HIALEAH, FL. 33012
TEL. (305) 825-7900 FAX (305) 825-5805

revisions:

no	date	by	description
A	04.27.05		REV. PER BCCO COMMENTS
B	04.05.10		UPDATED TO 2007 FBC

date: 09-13-04
scale: 3/8" = 1"
dr. by: HAMID
chk. by:

drawing no.
W04-81

sheet 2 of 5

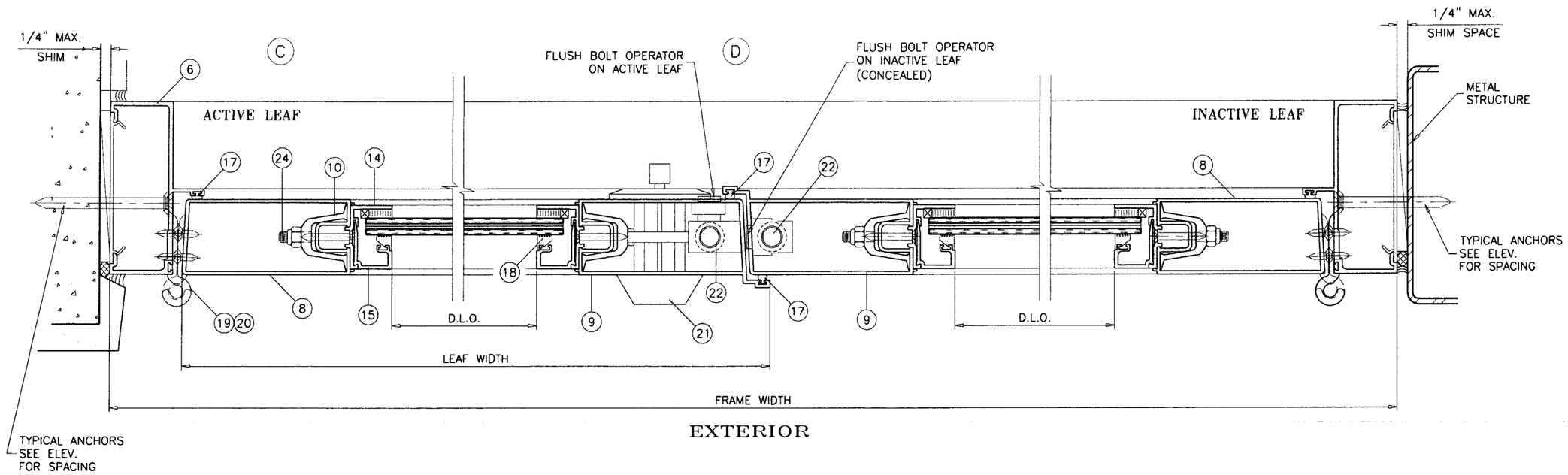

EXTERIOR

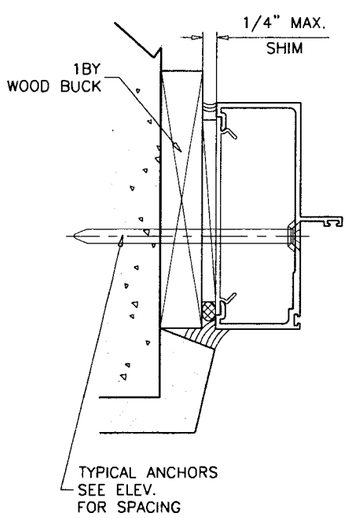

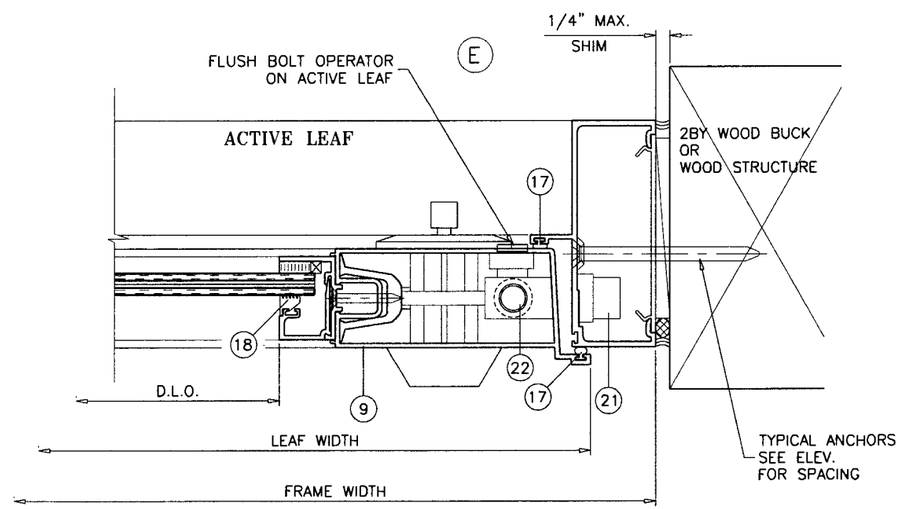

EXTERIOR

Engr: JAVAD AHMAD
CIVIL
FLA. PE # 70592
C.A.N. 3538

APR 21 2010

PRODUCT RENEWED
as complying with the Florida
Building Code
Acceptance No 10-0518.06
Expiration Date 05/19/2015
By
Miami Dade Product Control
Division

AL-FAROOQ CORPORATION
ENGINEERS & PRODUCT DEVELOPMENT
1235 S.W. 87 AVE
MIAMI, FLORIDA 33174
TEL. (305) 264-8100 FAX. (305) 262-6978
COMP-ANL\W04-81UAW

SERIES REBECCA ALUM OUTSWING FRENCH DOOR (L.M.I.)

UNIVERSAL IMPACT WINDOWS & DOORS
1675 W. 31ST PLACE
HIALEAH, FL. 33012
TEL. (305) 825-7900 FAX (305) 825-5805

revisions:

no	date	by	description
A	04.27.05		REV. PER BCCO COMMENTS
B	04.05.10		UPDATED TO 2007 FBC

date: 09-13-04
scale: 3/8" = 1"
dr. by: HAMID
chk. by:

drawing no.
W04-81

sheet 3 of 5

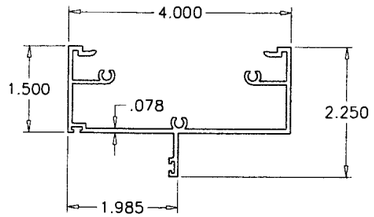

1 FRAME HEAD

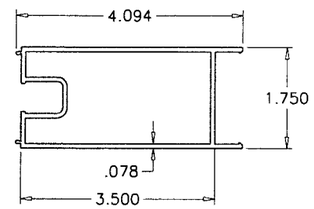

2 DOOR LEAF HEAD & SILL

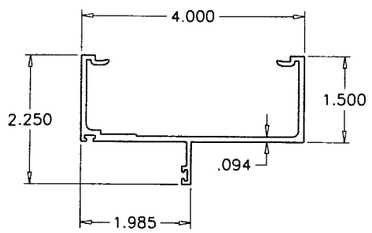

6 FRAME JAMB

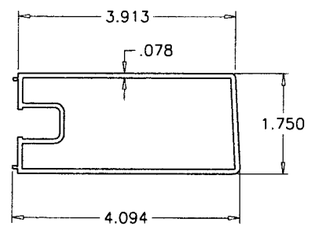

8 DOOR LEAF JAMB SIDE

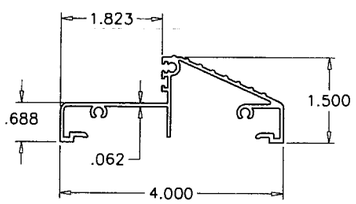

3 THRESHOLD TYPE 1

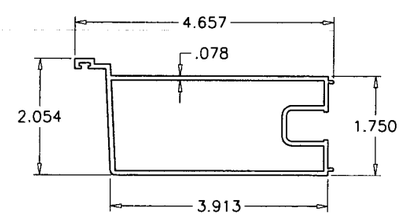

9 DOOR LEAF LOCK SIDE

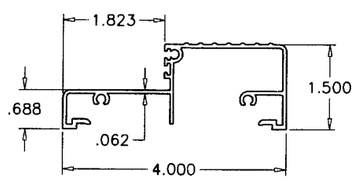

3A THRESHOLD TYPE 2

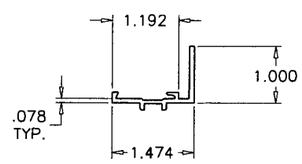

14 GLASS ADAPTER

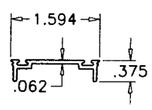

5 COVER TOP & BOTTOM RAIL

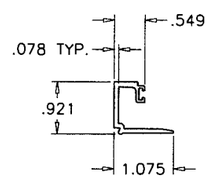

15 GLASS STOP

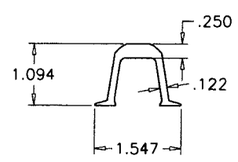

10 JAMB STIFFENER

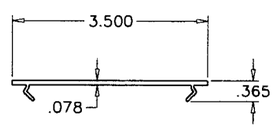

11 SHEAR PLATE

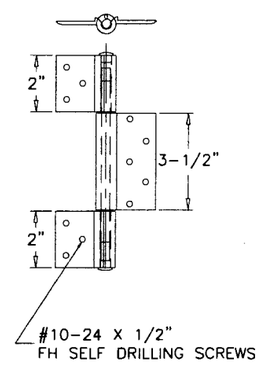

19 20 3 PIECE HINGE

ITEM #	PART #	QUANTITY	DESCRIPTION	MATERIAL	MANF./SUPPLIER/REMARKS
1	UA-1089	AS REQD.	FRAME HEAD	6063-T6	
2	UA-1092	2/ LEAF	TOP AND BOTTOM RAIL	6063-T6	–
3	UA-1094	1	DOOR FRAME SILL TYPE 1	6063-T6	–
3A	UA-1094B	1	DOOR FRAME SILL TYPE 2	6063-T6	–
5	UA-1096	2/ LEAF	SNAP COVER TOP & BOTTOM RAIL	6063-T5	–
6	UA-1091	2	DOOR FRAME JAMB	6063-T6	–
8	UA-1090	1/ LEAF	DOOR LEAF JAMB – HINGE SIDE	6063-T6	–
9	UA-1093	1/ LEAF	DOOR LEAF – LOCK SIDE	6063-T6	–
10	UA-1095	4/ LEAF	JAMB STIFFENER	6063-T6	4" LONG
11	A-4008	AS REQD.	SHEAR PLATE @ ANCHOR LOCATIONS	6063-T5	6-7/8" LONG
12	–	AS REQD.	GLAZING TAPE SPACER (1/8" X 3/8" X 1" LONG)	–	4" FROM CORNERS & AT MIDSPAN OF VERTICALS
13	–	AS REQD.	WEDGE GASKET	VINYL	–
14	UA-1102	AS REQD.	GLASS ADAPTER	6063-T6	–
15	UA-1101	AS REQD.	GLASS STOP	6063-T6	–
16	S-7800	AS REQD.	FIN-SEAL WEATHERSTRIPPING	–	.187 X .330
17	WV-3021	AS REQD.	BULB WEATHERSTRIPPING	VINYL	WIBORG
18	UA-1103	AS REQD.	GLAZING VINYL	PVC	–
19	UA-1097	2/ LEAF	CENTER HINGE WITH SS PIN	6063-T6	10" FROM TOP & BOTTOM
20	UA-1098	2/ LEAF	TOP & BOTTOM HINGE WITH SS PIN	6063-T6	10" FROM TOP & BOTTOM
21	–	1	DEAD BOLT LOCK SET	–	WESLOCK INTL.
22	–	2/ LEAF	MANUALLY OPERATED FLUSH BOLT	ZINC CAST	DELTA IND.
23	–	1	CONVENTIONAL DOOR KNOB SET	–	WESLOCK INTL.
24	–	2/ LEAF	3/8" DIA. THREADED ROD	STEEL	–
25	#10 X 1"	AS REQD.	FRAME ASSY. SCREWS	–	PAN HEAD SMS
26	#8 X 1-1/4"	AS REQD.	GLAZING ADAPTER SCREWS, AT 6" FROM ENDS & 12" O.C.	–	FH SELF DRILLING

Engr: JAVAD AHMAD
CIVIL
FLA. PE # 70592
C.A.N. 3538

APR 2 1 2010

PRODUCT RENEWED
as complying with the Florida
Building Code
Acceptance No 10-0518.06
Expiration Date 05/19/2015
By
Miami Dade Product Control
Division

AL-FAROOQ CORPORATION
ENGINEERS & PRODUCT DEVELOPMENT
1235 S.W. 87 AVE
MIAMI, FLORIDA 33174
TEL. (305) 264-8100 FAX. (305) 262-6978

COMP-ANL\W04-81UAW

SERIES REBECCA ALUM OUTSWING FRENCH DOOR (L.M.I.)

UNIVERSAL IMPACT WINDOWS & DOORS
1675 W. 31ST PLACE
HIALEAH, FL. 33012
TEL. (305) 825-7900 FAX (305) 825-5805

revisions:

no	date	by	description
A	04.27.05		REV. PER BCCO COMMENTS
B	04.05.10		UPDATED TO 2007 FBC

date: 09-13-04
scale: 3/8" = 1"
dr. by: HAMID
chk. by:

drawing no.
W04-81

sheet 4 of 5

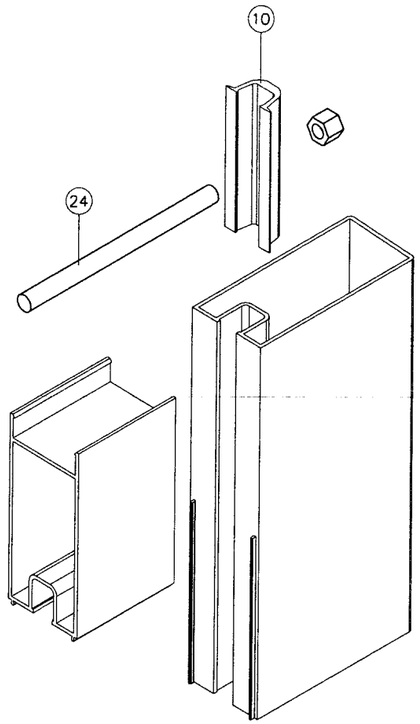

LEAF CORNER

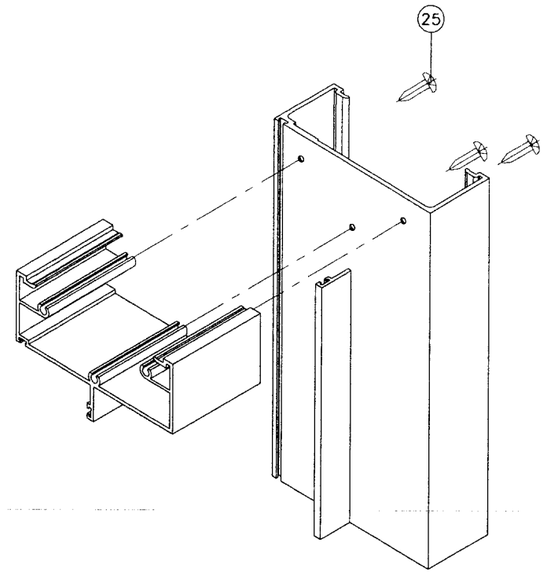

DOOR CORNER

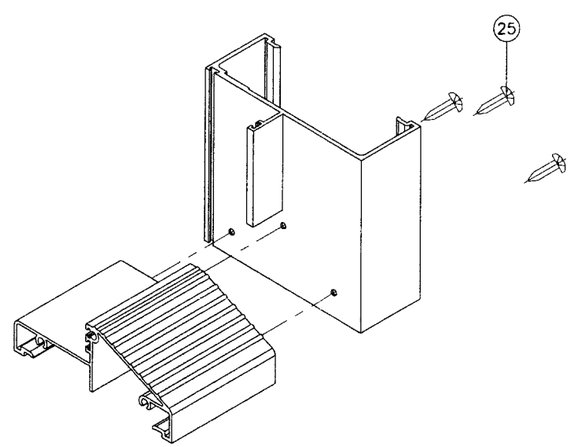

DOOR SILL CORNER

Engr: JAVAD AHMAD
CIVIL
FLA. PE # 70592
C.A.N. 3538

APR 2 1 2010

PRODUCT RENEWED
as complying with the Florida
Building Code
Acceptance No 10-0518.06
Expiration Date 05/19/2015
By
Miami Dade Product Control
Division

AL-FAROOQ CORPORATION
ENGINEERS & PRODUCT DEVELOPMENT
1235 S.W. 87 AVE
MIAMI, FLORIDA 33174
TEL. (305) 264-8100 FAX. (305) 262-6978

COMP-ANL\W04-81UAW

SERIES REBECCA ALUM OUTSWING FRENCH DOOR (L.M.I.)

UNIVERSAL IMPACT WINDOWS & DOORS
1675 W. 31ST PLACE
HIALEAH, FL. 33012
TEL. (305) 825-5805 FAX (305) 825-5805

revisions:

no	date	by	description
A	04.27.05		REV. PER BCCO COMMENTS
B	04.05.10		UPDATED TO 2007 FBC

date: 09-13-04
scale: 3/8" = 1"
dr. by: HAMID
chk. by:

drawing no.
W04-81

sheet 5 of 5