MIAMI-DADE COUNTY
BUILDING CODE COMPLIANCE OFFICE (BCCO)
PRODUCT CONTROL DIVISION

MIAMI-DADE COUNTY, FLORIDA
METRO-DADE FLAGLER BUILDING
140 WEST FLAGLER STREET, SUITE 1603
MIAMI, FLORIDA 33130-1563
(305) 375-2901 FAX (305) 372-6339
www.miamidade.gov/buildingcode

NOTICE OF ACCEPTANCE (NOA)

Arch Windows, LLC dba AWP
8130 NW 74th Avenue
Medley, FL 33166

SCOPE:

This NOA is being issued under the applicable rules and regulations governing the use of construction materials. The documentation submitted has been reviewed by Miami-Dade County Product Control Division and accepted by the Board of Rules and Appeals (BORA) to be used in Miami Dade County and other areas where allowed by the Authority Having Jurisdiction (AHJ).

This NOA shall not be valid after the expiration date stated below. The Miami-Dade County Product Control Division (In Miami Dade County) and/or the AHJ (in areas other than Miami Dade County) reserve the right to have this product or material tested for quality assurance purposes. If this product or material fails to perform in the accepted manner, the manufacturer will incur the expense of such testing and the AHJ may immediately revoke, modify, or suspend the use of such product or material within their jurisdiction. BORA reserves the right to revoke this acceptance, if it is determined by Miami-Dade County Product Control Division that this product or material fails to meet the requirements of the applicable building code. This product is approved as described herein, and has been designed to comply with the Florida Building Code, including the High Velocity Hurricane Zone.

DESCRIPTION: Series "4000" Aluminum Sliding Glass Door – N.I.

APPROVAL DOCUMENT: Drawing No. **W97-12**, titled "Series 4000 Alum Sld. Glass Door (N.I.)" Sheets 1 through 9 of 9, dated 07/07/97 with revision E dated 05/06/10, prepared by Al-Farooq Corporation, signed and sealed by Javad Ahmad, P.E., bearing the Miami-Dade County Product Control Revision stamp with the Notice of Acceptance number and expiration date by the Miami-Dade County Product Control Division.

MISSILE IMPACT RATING: None

LABELING: Each unit shall bear a permanent label with the manufacturer's name or logo, city, state and following statement: "Miami-Dade County Product Control Approved", unless otherwise noted herein.

RENEWAL of this NOA shall be considered after a renewal application has been filed and there has been no change in the applicable building code negatively affecting the performance of this product.

TERMINATION of this NOA will occur after the expiration date or if there has been a revision or change in the materials, use, and/or manufacture of the product or process. Misuse of this NOA as an endorsement of any product, for sales, advertising or any other purposes shall automatically terminate this NOA. Failure to comply with any section of this NOA shall be cause for termination and removal of NOA.

ADVERTISEMENT: The NOA number preceded by the words Miami-Dade County, Florida, and followed by the expiration date may be displayed in advertising literature. If any portion of the NOA is displayed, then it shall be done in its entirety.

INSPECTION: A copy of this entire NOA shall be provided to the user by the manufacturer or its distributors and shall be available for inspection at the job site at the request of the Building Official.

This NOA **revises NOA # 09-0331.14** and consists of this page 1, and Evidence pages E-1 and E-2, as well as approval document mentioned above.

The submitted documentation was reviewed by **Manuel Perez, P.E.**

MIAMI-DADE COUNTY APPROVED

Arch Windows, LLC dba AWP

NOTICE OF ACCEPTANCE: EVIDENCE SUBMITTED

A. DRAWINGS

1. Manufacturer's die drawings and sections.
2. Drawing No. **W97-12**, titled "Series 4000 Alum Sld. Glass Door (N.I.)" Sheets 1 through 9 of 9, dated 07/07/97 with revision E dated 05/06/10, prepared by Al-Farooq Corporation, signed and sealed by Javad Ahmad, P.E.

B. TESTS

1. Test reports on: 1) Air Infiltration Test, per FBC, TAS 202-94
   2) Uniform Static Air Pressure Test, Loading per FBC TAS 202-94
   3) Water Resistance Test, per FBC, TAS 202-94
   4) Large Missile Impact Test per FBC, TAS 201-94
   5) Cyclic Wind Pressure Loading per FBC, TAS 203-94
   6) Forced Entry Test, per FBC 2411 3.2.1, TAS 202-94

   along with marked-up drawings and installation diagram of an aluminum sliding glass door, prepared by Fenestration Testing Laboratory, Inc., Test Report No. **FTL-5175**, 07/14/07, signed and sealed by Carlos S. Rionda, P.E.
   (Submitted under NOA # 07-0808.09)
2. Test reports on: 1) Air Infiltration Test, per FBC, TAS 202-94
   2) Uniform Static Air Pressure Test, Loading per FBC TAS 202-94
   3) Water Resistance Test, per FBC, TAS 202-94
   4) Forced Entry Test, per FBC 3603.2 (b) and TAS 202-94

   along with marked-up drawings and installation diagram of an aluminum sliding glass door, prepared by Fenestration Testing Laboratory, Inc., Test Report No. **FTL-2284**, dated 2/15/99, signed and sealed by Joseph Chan, P.E.
   (Submitted under NOA #02-0927.12)
3. Test reports on: 1) Air Infiltration Test, per SFBC, PA 202-94
   2) Uniform Static Air Pressure Test, Loading per SFBC, PA 202-94
   3) Water Resistance Test, per SFBC, PA 202-94
   4) Forced Entry Test, per SFBC and PA 202-94

   Along with installation diagram of an aluminum sliding glass door, prepared by Fenestration Testing Laboratory, Inc., Test Report No. **FTL-1393 (report#7)**, specimen #A1, A2 & A3, dated 04/19/1996, signed and sealed by late Gilbert Diamond, P.E.
   (Submitted under NOA #02-0927.06)

Manuel Perez, P.E.
Product Control Examiner
NOA No. 10-0518.08
Expiration Date: July 22, 2011
Approval Date: August 25, 2010

NOTICE OF ACCEPTANCE: EVIDENCE SUBMITTED

4. Test reports on: 1) Air Infiltration Test, per PA 202-94
   2) Uniform Static Air Pressure Test, Loading per PA 202-94
   3) Water Resistance Test, per PA 202-94
   4) Forced Entry Test, per SFBC 3603.2 (b) and PA 202-94

   along with marked-up drawings and installation diagram of an aluminum sliding glass door, prepared by Construction Research Laboratory, Inc., Test Report No. **CRL-6392**, dated April 17, 1997, signed and sealed by Nariman S. Balsara, P.E. ***(Submitted under NOA #01-0607.03)***

C. CALCULATIONS

1. Anchor verification calculations and structural analysis, complying with FBC-2007, dated 03/30/09, prepared, signed and sealed by Humayoun Farooq, P.E. **Complies with ASTM E1300-02/04**

D. QUALITY ASSURANCE

1. Miami Dade Building Code Compliance Office (BCCO).

E. MATERIAL CERTIFICATIONS

1. None.

F. STATEMENTS

1. Statement letter of conformance and no financial interest, dated May 4, 2010, signed and sealed by Javad Ahmad, P.E.
2. Laboratory compliance letter for Test Report No. **HTL- 5175**, issued by Fenestration Testing Laboratory, Inc., dated July 16, 2007, signed and sealed by Carlos S. Rionda, P.E.

G. OTHERS

1. Notice of Acceptance No. **09-0331.14**, issued to AWP, LLC for their Series 4000 Aluminum Sliding Glass Door, approved on 07/22/11 and expiring on 07/22/11.

Manuel Perez, P.E.
Product Control Examiner
NOA No. 10-0518.08
Expiration Date: July 22, 2011
Approval Date: August 25, 2010

DESIGN LOAD CAPACITY – PSF					
PANEL WIDTH NOMINAL INCHES	DOOR HEIGHT INCHES	WITHOUT REINFORCING		WITH REINFORCING	
		EXT. (+)	INT. (–)	EXT. (+)	INT. (–)
24	80–1/2	50.7	93.1	55.3	111.6
30		50.7	78.5	55.3	93.4
36		50.7	68.6	55.3	81.5
42		50.7	61.7	55.3	73.4
48		50.7	56.9	55.3	67.6
54		50.7	53.4	55.3	63.5
24	95–1/2	50.7	55.4	55.3	66.3
30		50.7	51.8	55.3	62.4
36		47.4	47.4	55.3	56.5
42		46.0	46.0	54.3	54.3
48		46.0	46.0	53.5	53.5

NOTE:
GLASS CAPACITIES ON THIS SHEET ARE BASED ON ASTM E1300–04 (3 SEC. GUSTS) AND FLORIDA BUILDING COMMISSION DECLARATORY STATEMENT DCA05–DEC–219

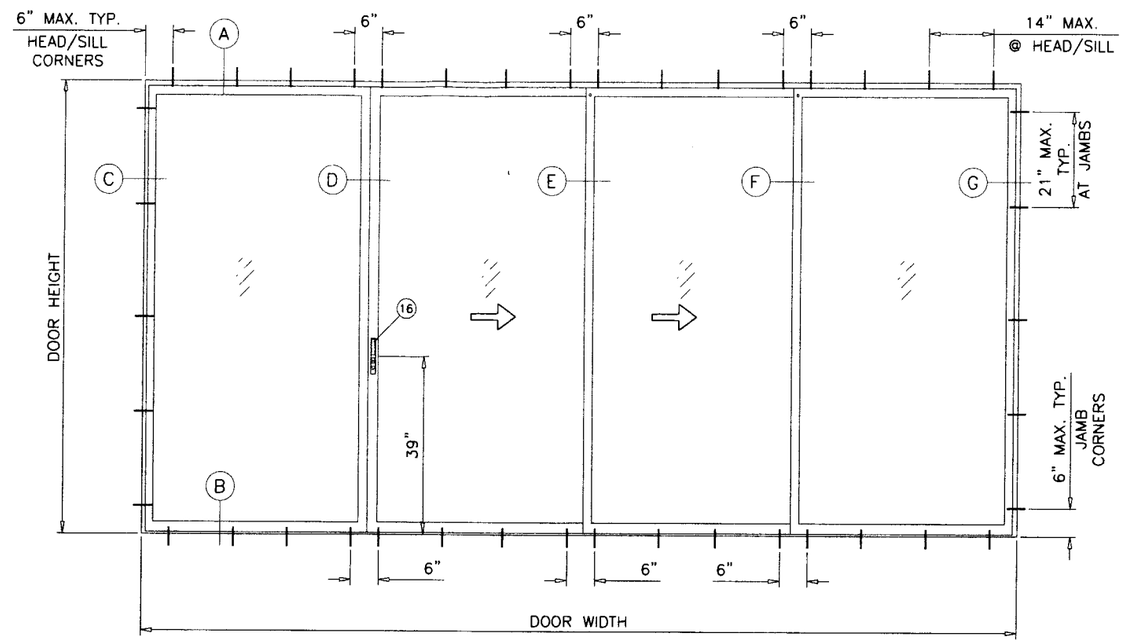

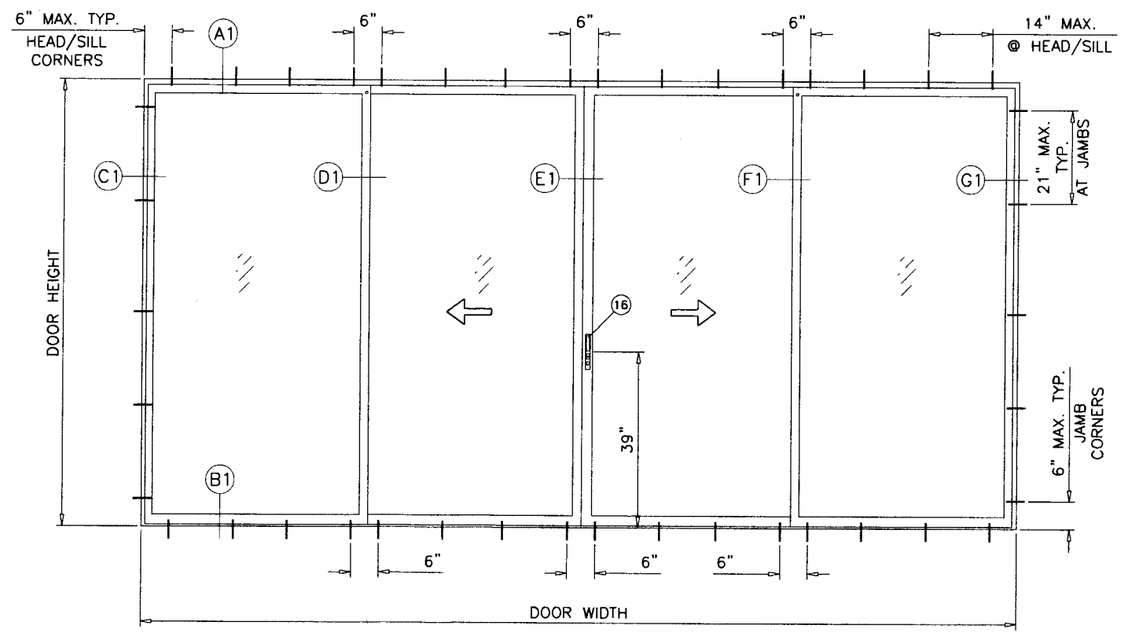

TYPICAL ELEVATION

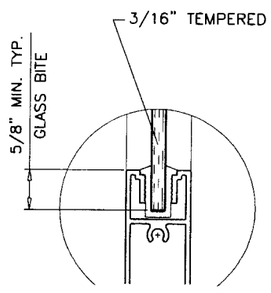

GLAZING DETAIL

SERIES 4000 ALUMINUM SLIDING GLASS DOOR

DESIGN LOAD CAPACITY FOR DOORS TO BE AS PER CHARTS SHOWN ABOVE.

THIS PRODUCT HAS BEEN DESIGNED AND TESTED TO COMPLY WITH THE REQUIREMENTS OF THE FLORIDA BUILDING CODE 2007 EDITION INCLUDING HIGH VELOCITY HURRICANE ZONE (HVHZ).

WOOD BUCKS BY OTHERS, MUST BE ANCHORED PROPERLY TO TRANSFER LOADS TO THE STRUCTURE.

ANCHORS SHALL BE AS LISTED, SPACED AS SHOWN ON DETAILS, ANCHORS EMBEDMENT TO BASE MATERIAL SHALL BE BEYOND WALL DRESSING OR STUCCO.

ANCHORING OR LOADING CONDITIONS NOT SHOWN IN THESE DETAILS ARE NOT PART OF THIS APPROVAL.

A LOAD DURATION INCREASE IS USED IN DESIGN OF ANCHORS INTO WOOD ONLY.

MATERIALS INCLUDING BUT NOT LIMITED TO STEEL/METAL SCREWS, THAT COME INTO CONTACT WITH OTHER DISSIMILAR MATERIALS SHALL MEET THE REQUIREMENTS OF 2007 FLORIDA BLDG. CODE SECTION 2003.8.4.

DOORS NOT RATED FOR IMPACT.

INSTALLATION OF THIS PRODUCT IN THE HVHZ AREA REQUIRES THE USE OF APPROVED SHUTTERS OR EXTERNAL PROTECTION DEVICES COMPLYING WITH HVHZ REQUIREMENTS.

INSTALLATION OF THIS SYSTEM OUTSIDE THE HVHZ AREA SHALL MEET THE APPLICABLE REQUIREMENTS FOR WIND BORNE DEBRIS PROTECTION.

Engr: JAVAD AHMAD
CIVIL
FLA. PE # 70592
C.A.N. 3538

MAY 07 2010

MONOLITHIC GLASS
NON IMPACT

PRODUCT REVIEWED
as complying with the Florida Building Code
Acceptance No. 10-0518.08
Expiration Date JULY 22, 2011
Manuel Perez
Miami-Dade Product Control

AL-FAROOQ CORPORATION
ENGINEERS & PRODUCT DEVELOPMENT
1235 S.W. 87 AVE
MIAMI, FLORIDA 33174
TEL. (305) 264-8100 FAX. (305) 262-6978
COMP-ANL\W97-12AWP

SERIES 4000 ALUM SLD. GLASS DOOR (N.I.)

ARCH WINDOWS, LLC dba AWP
8130 N.W. 74TH AVE.
MEDLEY, FL. 33166
TEL. (305) 887-2646 FAX (305) 883-1309

revisions:

no	date	by	description
A	5.19.98		GENERAL REVISION
B	07.20.06		UPDATED FOR 2004 FBC
C	08.02.07		NO CHANGE THIS SHEET
D	02.23.09		UPDATED FOR 2007 FBC
E	05.06.10		MANUF. NAME REVISED

date: 07-07-97
scale: 3/8"=1'-0"
dr. by: HAMID
chk. by:

drawing no.
W97-12

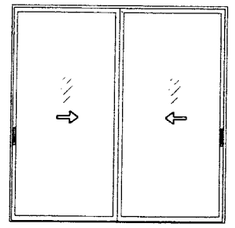

XX

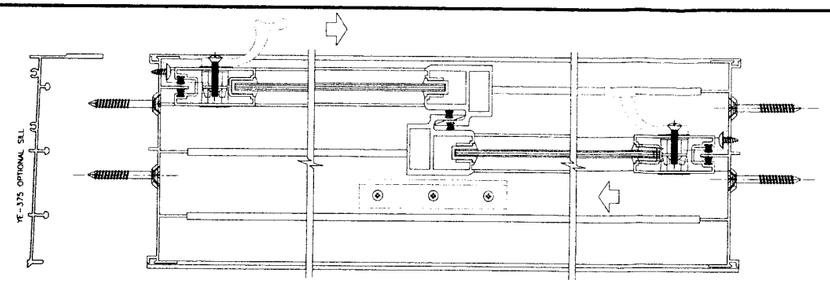

X X

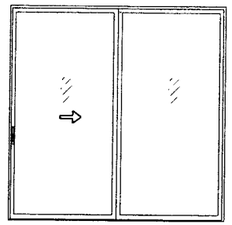

XO (SHOWN)
OX

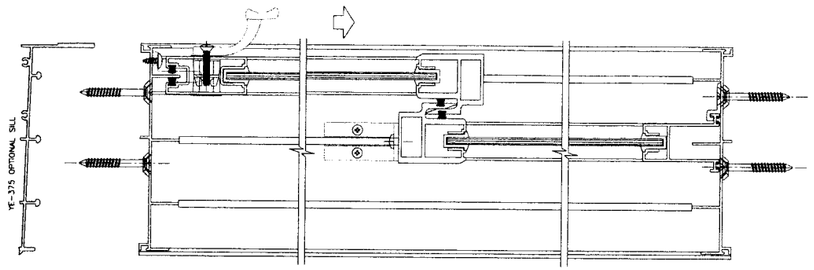

X 0

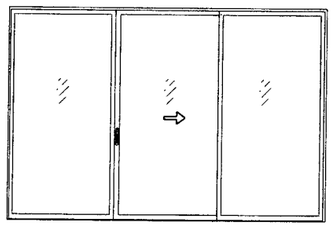

OXO

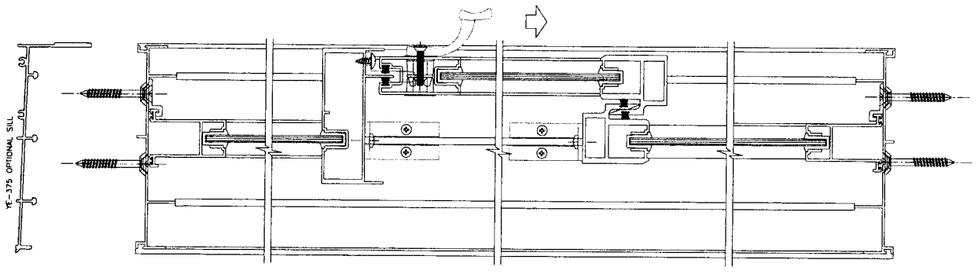

0 X 0

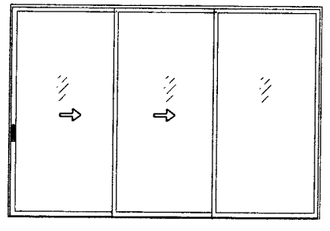

XXO (SHOWN)
OXX

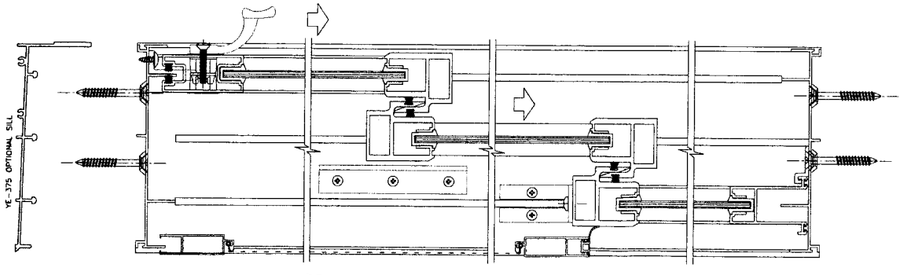

X X 0

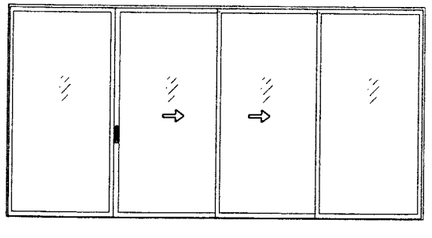

OXXO

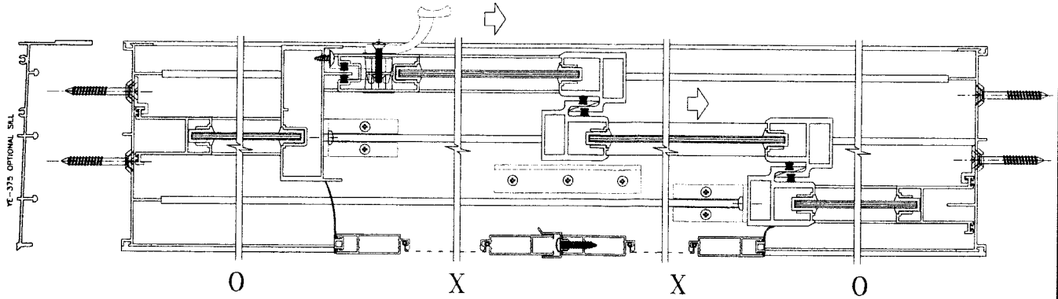

0 X X 0

APPROVED CONFIGURATIONS
3 TRACKS

Engr: JAVAD AHMAD
CIVIL
FLA. PE # 70592
C.A.N. 3538

MAY 17 2010

PRODUCT REVISED
as complying with the Florida
Building Code
Acceptance No. 10-0518.08
Expiration Date JULY 22, 2011
By Manuel Perez
Product Control

revisions:			
no	date	by	description
B	07.20.06		UPDATED FOR 2004 FBC
C	08.02.07		DTLS. REV.
D	02.23.09		UPDATED FOR 2007 FBC
E	05.06.10		MANUF. NAME REVISED

date: 07-07-97
scale: 1/2"=1'-0"
dr. by: HAMID
chk. by:

drawing no.
W97-12

sheet 2 of 9

SERIES 4000 ALUM SLD. GLASS DOOR (N.I.)

ARCH WINDOWS, LLC dba AWP
8130 N.W. 74TH AVE.
MEDLEY, FL. 33166
TEL. (305) 887-2646 FAX. (305) 883-1309

AL-FAROOQ CORPORATION
ENGINEERS & PRODUCT DEVELOPMENT
1235 S.W. 87 AVE
MIAMI, FLORIDA 33174
TEL. (305) 264-8100 FAX. (305) 262-6978

COMP-ANL\W97-12AWP

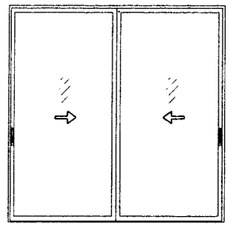

XX

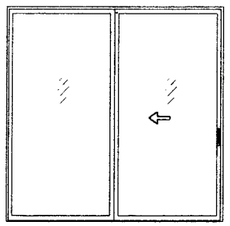

OX (SHOWN)
XO

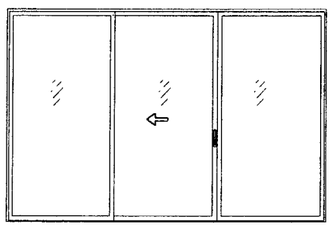

OXO

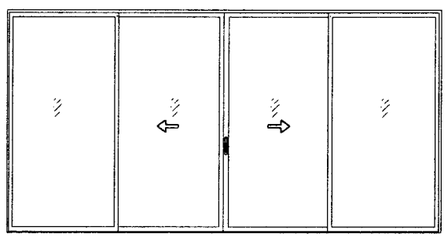

OXXO

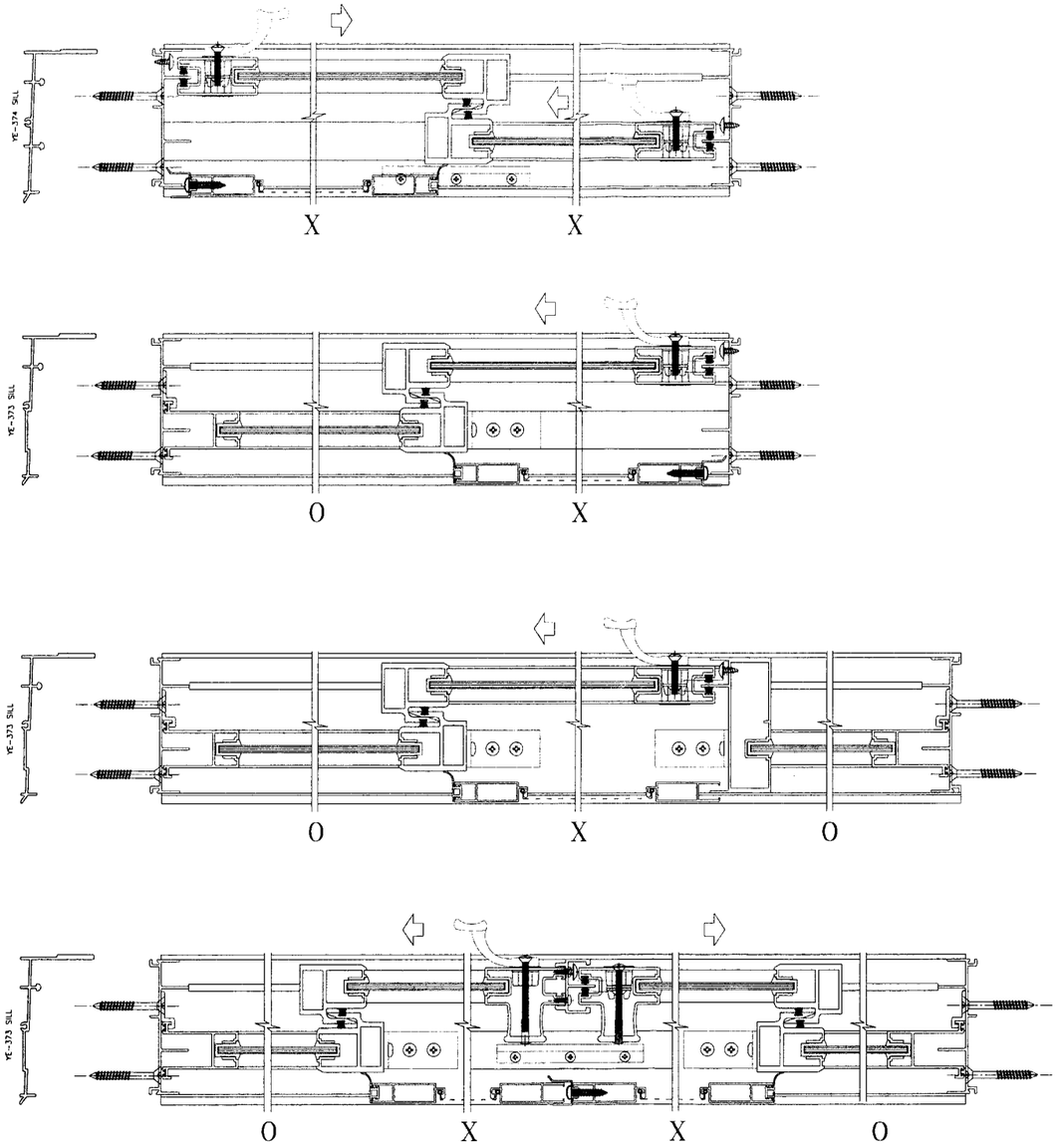

APPROVED CONFIGURATIONS
2 TRACKS
WITHOUT STEEL REINFORCING

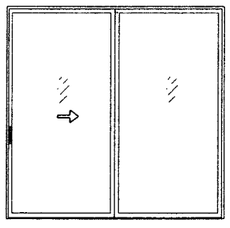

XO (SHOWN)
OX

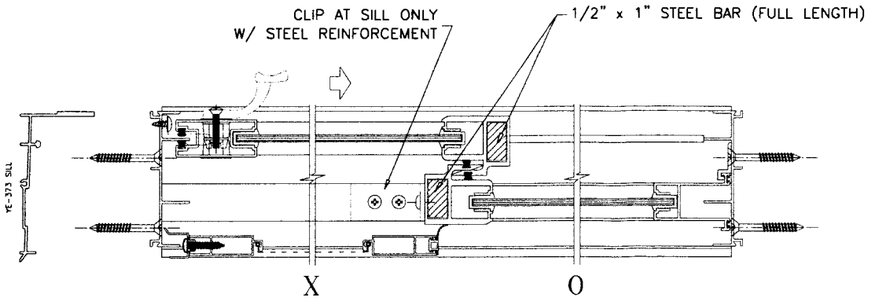

APPROVED CONFIGURATIONS
2 TRACKS
WITH STEEL REINFORCING

Engr: JAVAD AHMAD
CIVIL
FLA. PE # 70592
C.A.N. 3538

MAY 07 2010

PRODUCT REVISED
as complying with the Florida
Building Code
Acceptance No. 10-0518.08
Expiration Date JULY 22, 2011
By Manuel Perez
Miami-Dade Product Control
Division

AL-FAROOQ CORPORATION
ENGINEERS & PRODUCT DEVELOPMENT
1235 S.W. 87 AVE
MIAMI, FLORIDA 33174
TEL. (305) 264-8100 FAX. (305) 262-6978
COMP-ANL\W97-12AWP

SERIES 4000 ALUM SLD. GLASS DOOR (N.I.)

ARCH WINDOWS, LLC dba AWP
8130 N.W. 74TH AVE.
MEDLEY, FL. 33166
TEL. (305) 887-2646 FAX (305) 883-1309

(revisions:

no	date	by	description
B	07.20.06		UPDATED FOR 2004 FBC
C	08.02.07		DTLS. REV.
D	02.23.09		UPDATED FOR 2007 FBC
E	05.06.10		MANUF. NAME REVISED

date: 07-07-97
scale: 1/2"=1'-0"
dr. by: HAMID
chk. by:

drawing no.
W97-12

sheet 3 of 9

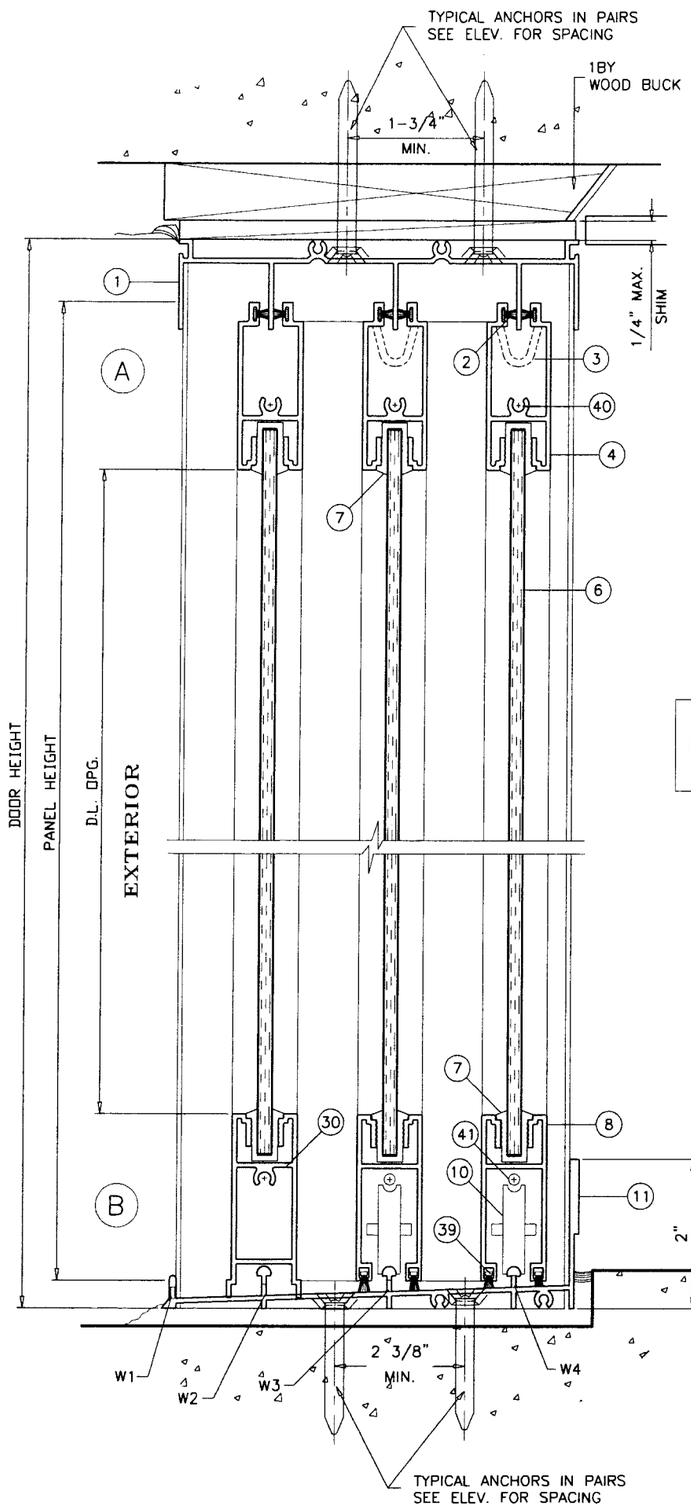

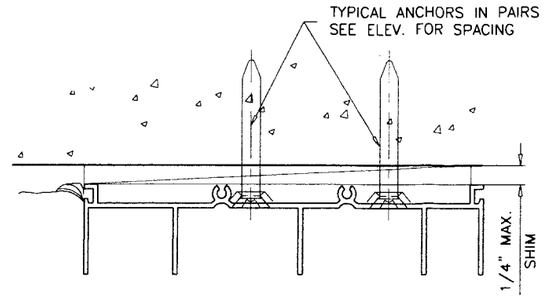

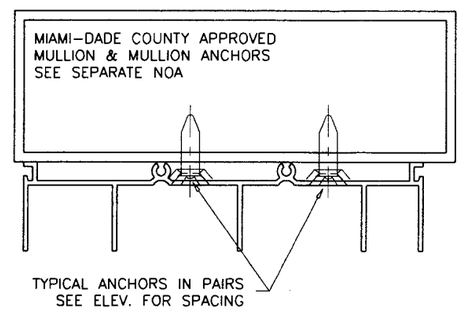

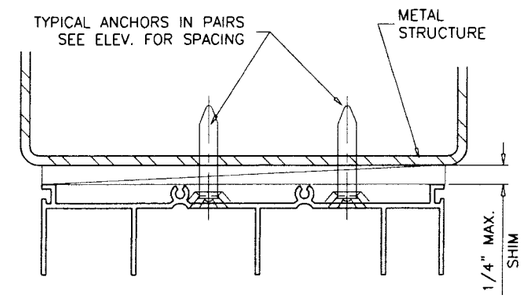

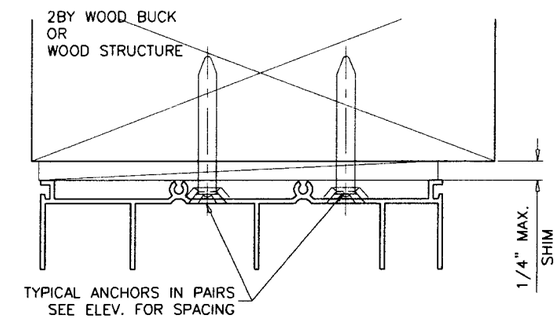

WOOD BUCKS AND METAL STRUCTURE NOT BY AWP WDW. MUST SUSTAIN LOADS IMPOSED BY GLAZING SYSTEM AND TRANSFER THEM TO THE BUILDING STRUCTURE.

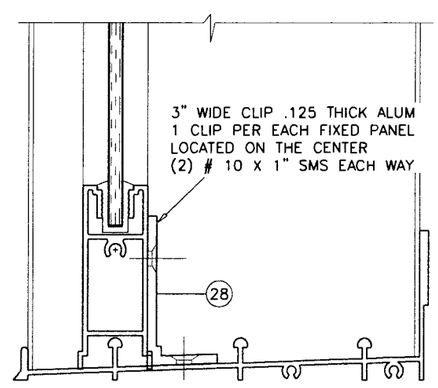

TYPICAL ANCHORS: SEE ELEV. FOR SPACING

1/4" DIA. TAPCONS BY 'ITW'

1/4" DIA. ULTRACON BY 'ELCO' (Fu=177 KSI, Fy=155 KSI)

INTO 2BY WOOD BUCKS OR WOOD STRUCTURES
1-3/8" MIN. PENETRATION INTO WOOD

THRU 1BY BUCKS INTO CONC. OR MASONRY
1-1/4" MIN. EMBED INTO CONC. OR MASONRY

DIRECTLY INTO CONC. OR MASONRY
1-1/4" MIN. EMBED INTO CONC. OR MASONRY

#14 SMS OR SELF DRILLING SCREWS (GRADE 2 CRS)

INTO METAL STRUCTURES

STEEL : 12 GA. MIN. (Fy = 36 KSI MIN.)
ALUMINUM : 1/8" THK. MIN. (6063-T5 MIN.)
(STEEL IN CONTACT WITH ALUMINUM TO BE PLATED OR PAINTED)

#12 SMS OR SELF DRILLING SCREWS

INTO MIAMI-DADE COUNTY APPROVED MULLIONS (MIN. THK. = .090")
(NO SHIM SPACE)

TYPICAL EDGE DISTANCE

INTO CONCRETE AND MASONRY = 2" MIN.
INTO WOOD STRUCTURE = 1" MIN.
INTO METAL STRUCTURE = 1/2" MIN.

CONCRETE f'c = 3000 PSI MIN.
MASONRY f'm = 2000 PSI MIN.

Engr: JAVAD AHMAD
CIVIL
FLA. PE # 70592
C.A.N. 3538

MAY 07 2010

PRODUCT REVISED
as complying with the Florida
Building Code
Acceptance No. 10-0518.08
Expiration Date JULY 22, 2011
By Manuel Perez
NOA Dept. Product Control
Ent. 2

3 TRACK DOOR DETAILS

AL-FAROOQ CORPORATION
ENGINEERS & PRODUCT DEVELOPMENT
1235 S.W. 87 AVE
MIAMI, FLORIDA 33174
TEL. (305) 264-8100 FAX. (305) 262-6978

COMP-ANL\W97-12AWP

SERIES 4000 ALUM SLD. GLASS DOOR (N.I.)

ARCH WINDOWS, LLC dba AWP
8130 N.W. 74TH AVE.
MEDLEY, FL. 33166
TEL. (305) 887-2646 FAX (305) 883-1309

revisions:

no	date	by	description
B	07.20.06		UPDATED FOR 2004 FBC
C	08.02.07		DTLS. REV.
D	02.23.09		UPDATED FOR 2007 FBC
E	05.06.10		MANUF. NAME REVISED

date: 07-07-97
scale: 1/2" = 1"
dr. by: HAMID
chk. by:

drawing no.
W97-12

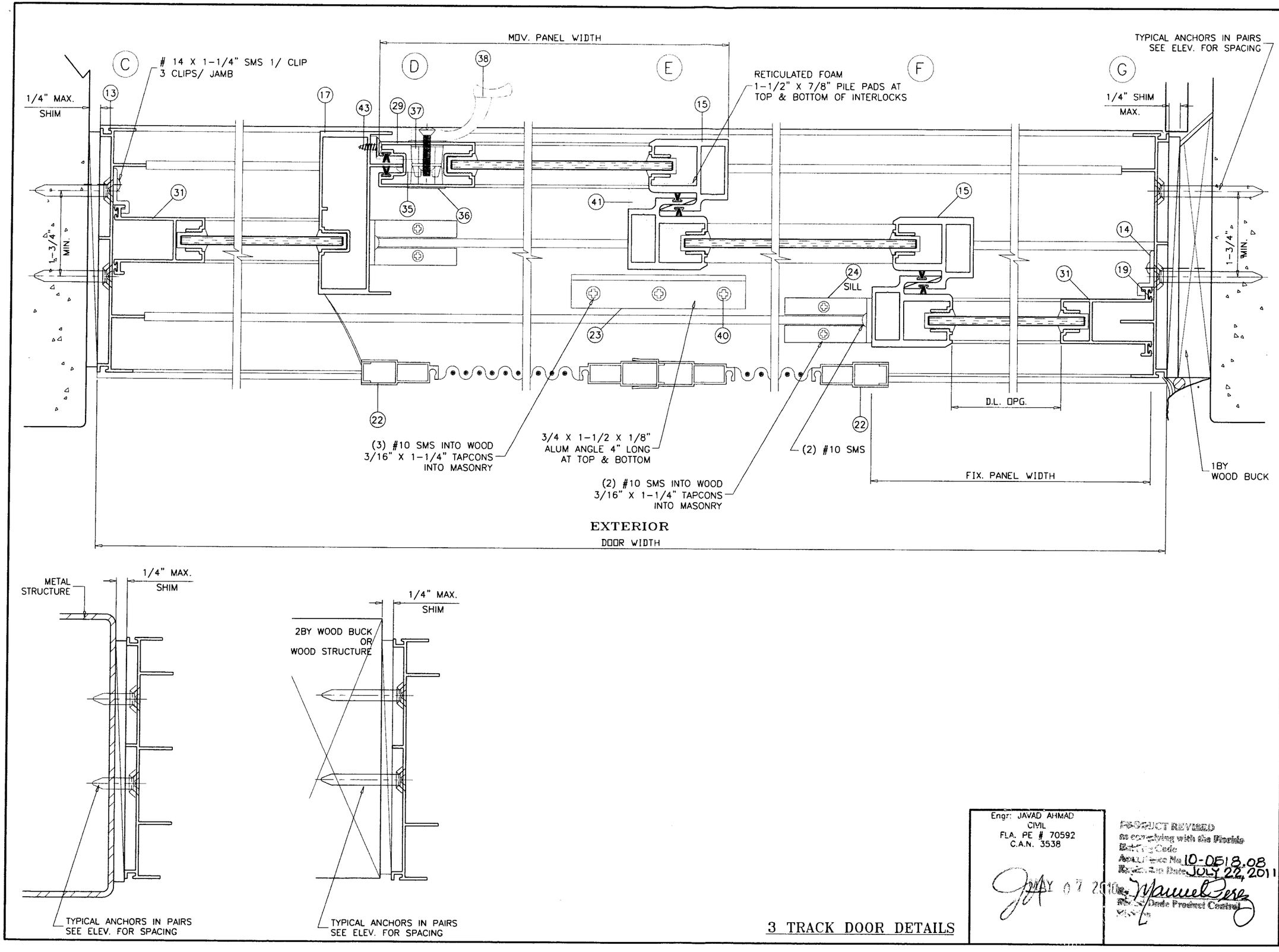

3 TRACK DOOR DETAILS

Engr: JAVAD AHMAD
CIVIL
FLA. PE # 70592
C.A.N. 3538

MAY 07 2010

PRODUCT REVISED
as complying with the Florida
Building Code
Acceptance No. 10-0518.08
Expiration Date JULY 22, 2011
By Manuel Perez
Florida Dade Product Control
Division

AL-FAROOQ CORPORATION
ENGINEERS & PRODUCT DEVELOPMENT
1235 S.W. 87 AVE
MIAMI, FLORIDA 33174
TEL. (305) 264-8100 FAX. (305) 262-6978
COMP-ANL\W97-12AWP

SERIES 4000 ALUM SLD. GLASS DOOR (N.I.)

ARCH WINDOWS, LLC dba AWP
8130 N.W. 74TH AVE.
MEDLEY, FL. 33166
TEL. (305) 887-2646 FAX (305) 883-1309

revisions:

no	date	by	description
B	07.20.06		UPDATED FOR 2004 FBC
C	08.02.07		DTLS. REV.
D	02.23.09		UPDATED FOR 2007 FBC
E	05.06.10		MANUF. NAME REVISED

date: 07-07-97
scale: 1/2" = 1"
dr. by: HAMID
chk. by:

drawing no.
W97-12

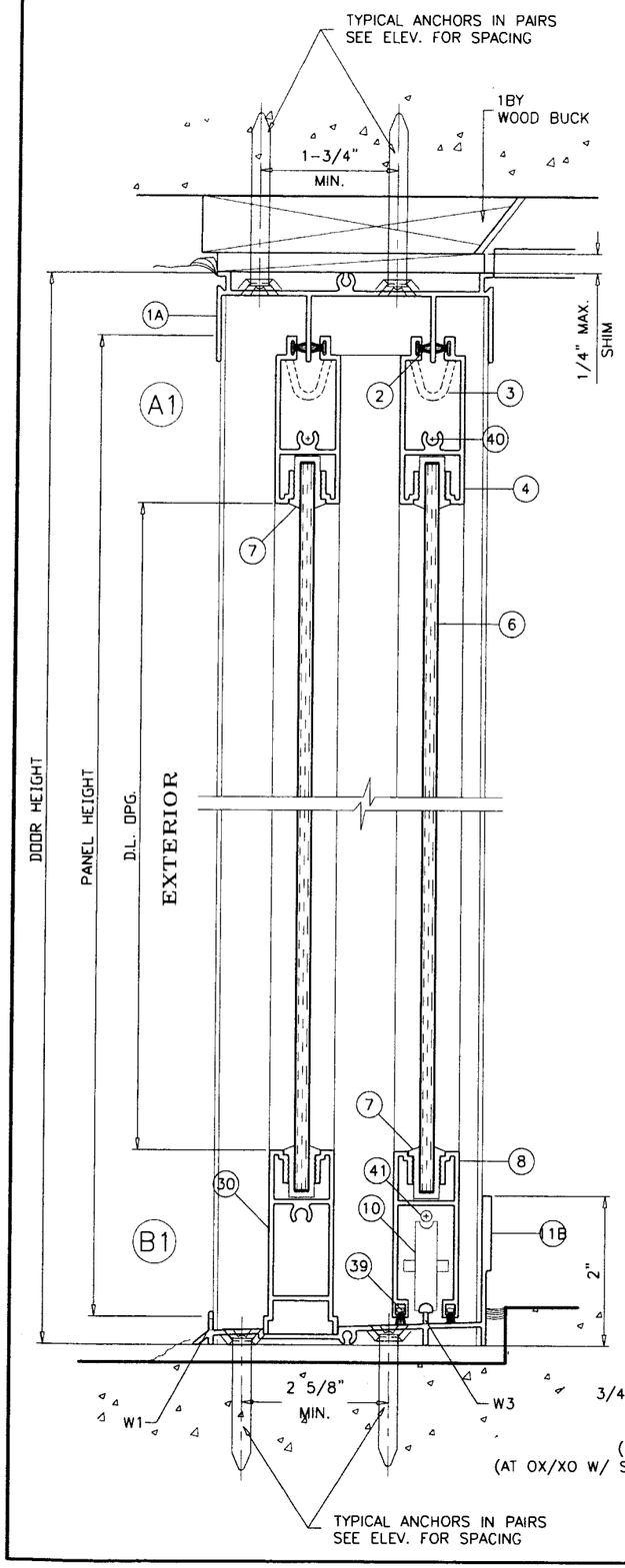

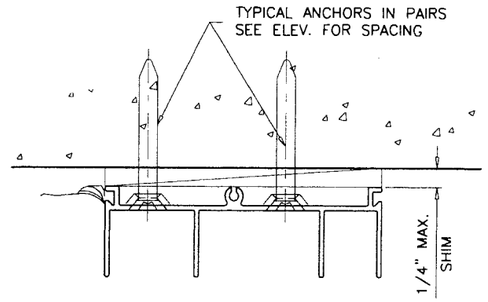

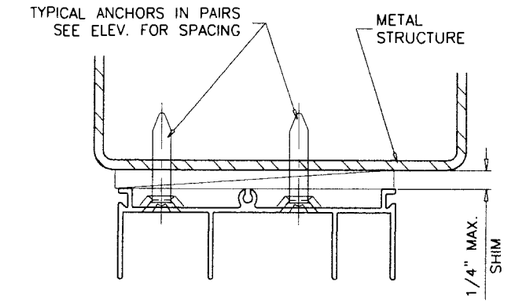

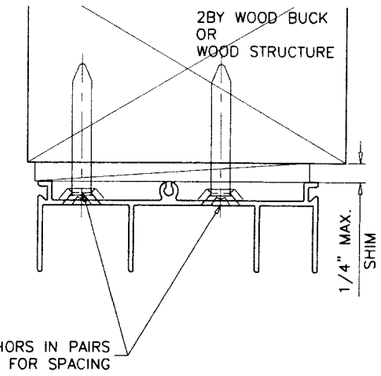

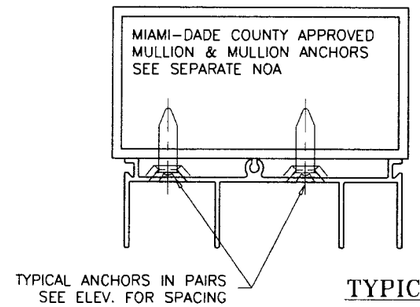

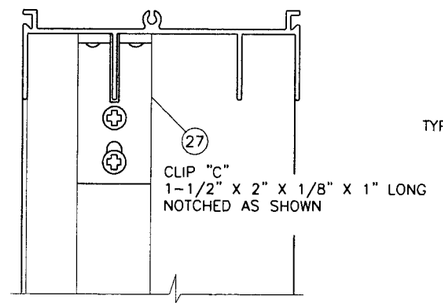

WOOD BUCKS AND METAL STRUCTURE NOT BY AWP WDW.
MUST SUSTAIN LOADS IMPOSED BY GLAZING SYSTEM
AND TRANSFER THEM TO THE BUILDING STRUCTURE.

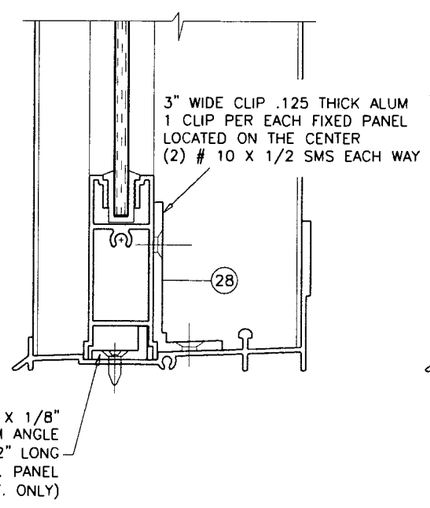

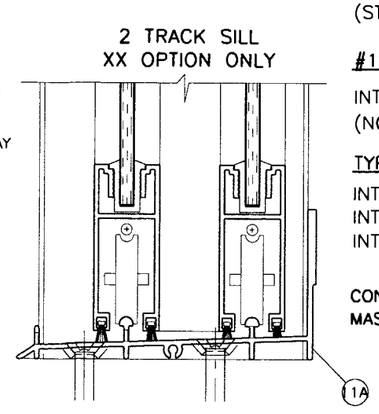

TYPICAL ANCHORS: SEE ELEV. FOR SPACING

1/4" DIA. TAPCONS BY 'ITW'

1/4" DIA. ULTRACON BY 'ELCO' (Fu=177 KSI, Fy=155 KSI)

INTO 2BY WOOD BUCKS OR WOOD STRUCTURES
1-3/8" MIN. PENETRATION INTO WOOD

THRU 1BY BUCKS INTO CONC. OR MASONRY
1-1/4" MIN. EMBED INTO CONC. OR MASONRY

DIRECTLY INTO CONC. OR MASONRY
1-1/4" MIN. EMBED INTO CONC. OR MASONRY

#14 SMS OR SELF DRILLING SCREWS (GRADE 2 CRS)

INTO METAL STRUCTURES

STEEL : 12 GA. MIN. (Fy = 36 KSI MIN.)
ALUMINUM : 1/8" THK. MIN. (6063-T5 MIN.)
(STEEL IN CONTACT WITH ALUMINUM TO BE PLATED OR PAINTED)

#12 SMS OR SELF DRILLING SCREWS

INTO MIAMI-DADE COUNTY APPROVED MULLIONS (MIN. THK. = .090")
(NO SHIM SPACE)

TYPICAL EDGE DISTANCE

INTO CONCRETE AND MASONRY = 2" MIN.
INTO WOOD STRUCTURE = 1" MIN.
INTO METAL STRUCTURE = 1/2" MIN.

CONCRETE f'c = 3000 PSI MIN.
MASONRY f'm = 2000 PSI MIN.

Engr: JAVAD AHMAD
CIVIL
FLA. PE # 70592
C.A.N. 3538

MAY 07 2010

PRODUCT REVISED
In complying with the Florida
Building Code
Acceptance No. 10-0518.08
Effective Date JULY 22, 2011
Manuel Perez
Miami-Dade Product Control
Division

2 TRACK DOOR DETAILS

AL-FAROOQ CORPORATION
ENGINEERS & PRODUCT DEVELOPMENT
1235 S.W. 87 AVE
MIAMI, FLORIDA 33174
TEL. (305) 264-8100 FAX. (305) 262-6978

COMP-ANL\W97-12AWP

SERIES 4000 ALUM SLD. GLASS DOOR (N.I.)

ARCH WINDOWS, LLC dba AWP
8130 N.W. 74TH AVE.
MEDLEY, FL. 33166
TEL. (305) 887-2646 FAX (305) 883-1309

revisions:

no	date	by	description
B	07.20.06		UPDATED FOR 2004 FBC
C	08.02.07		DTLS. REV.
D	02.23.09		UPDATED FOR 2007 FBC
E	05.06.10		MANUF. NAME REVISED

date: 07-07-97
scale: 1/2" = 1"
dr. by: HAMID
chk. by:

drawing no.
W97-12

sheet 6 of 9

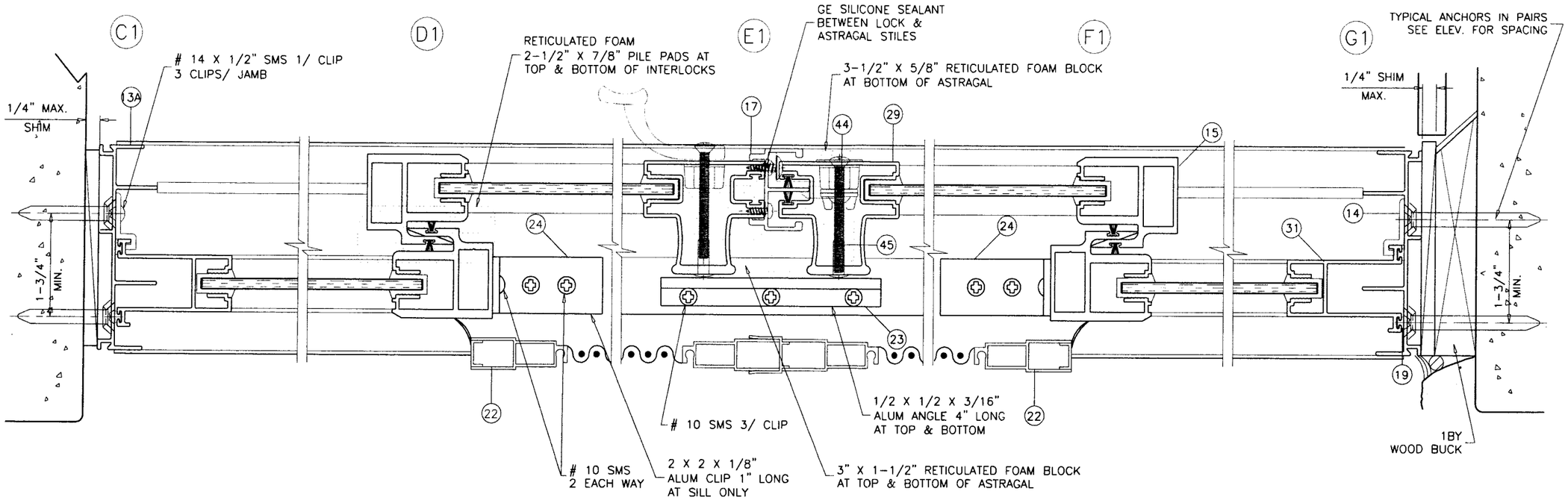

2 TRACK DOOR DETAILS

Engr: JAVAD AHMAD
CIVIL
FLA. PE # 70592
C.A.N. 3538

MAY 07 2010

PRODUCT REVISED
as complying with the Florida
Building Code
Acceptance No. 10-0518.08
Expiration Date JULY 22, 2011
By Manuel Perez
Miami Dade Product Control
Division

afc

AL-FAROOQ CORPORATION
ENGINEERS & PRODUCT DEVELOPMENT
1235 S.W. 87 AVE
MIAMI, FLORIDA 33174
TEL. (305) 264-8100 FAX. (305) 262-6978
COMP-ANL\W97-12AWP

SERIES 4000 ALUM SLD. GLASS DOOR (N.I.)

ARCH WINDOWS, LLC dba AWP
8130 N.W. 74TH AVE.
MEDLEY, FL. 33166
TEL. (305) 887-2646 FAX (305) 883-1309

revisions:

no	date	by	description
B	07.20.06		UPDATED FOR 2004 FBC
C	08.02.07		DTLS. REV.
D	02.23.09		UPDATED FOR 2007 FBC
E	05.06.10		MANUF. NAME REVISED

date: 07-07-97
scale: 1/2" = 1"
dr. by: HAMID
chk. by:

drawing no.
W97-12

sheet 7 of 9

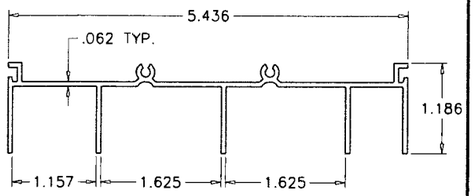

FRAME HEAD (3 TRACK)
YE-320
6063-T5
(1)

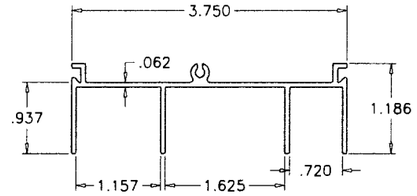

FRAME HEAD (2 TRACK)
YE-304
6063-T5
(1A)

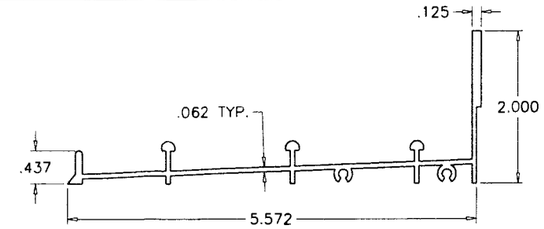

FRAME SILL (3 TRACK)
YE-375
6063-T5
(11)

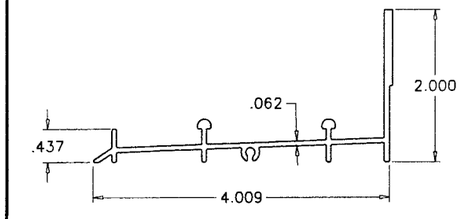

FRAME SILL (2 TRACK)
YE-374
6063-T5
(11A)

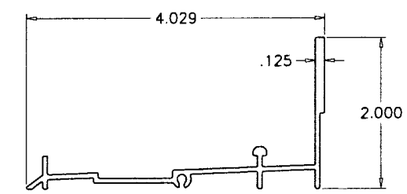

FRAME SILL
YE-373
6063-T5
(11B)

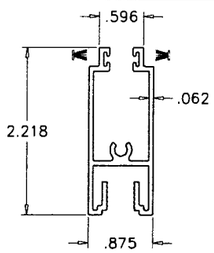

PANEL TOP RAIL
YE-307
6063-T5
(4)

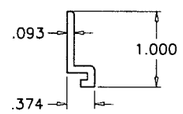

FIXED PANEL CLIP
YE-377
6063-T5
(14)

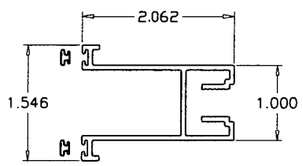

FIXED PANEL STILE
YE-302
6063-T5
(31)

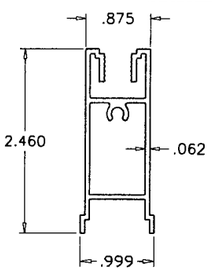

FIXED PANEL BOTTOM RAIL
YE-379
6063-T5
(30)

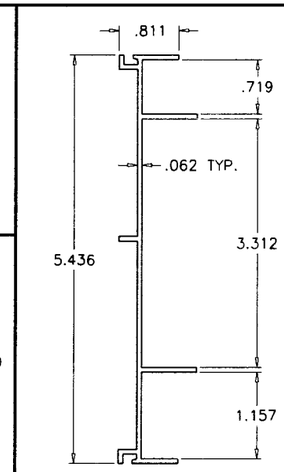

FRAME JAMB (3 TRACK)
YE-321
6063-T5
(13)

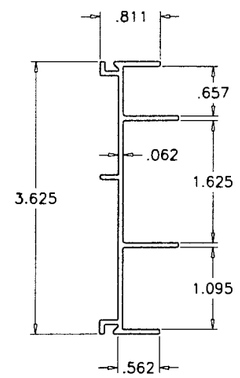

FRAME JAMB (2 TRACK)
YE-304
6063-T5
(13A)

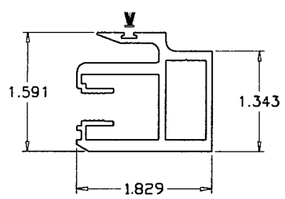

PANEL HEAVY INTERLOCK STILE
YE-325
6063-T5
(15)

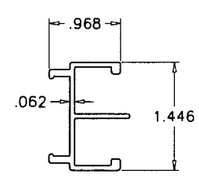

ASTRAGAL
YE-355
6063-T5
(32)

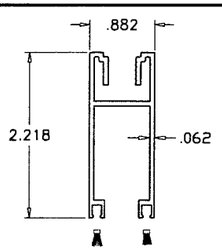

MOVING PANEL BOTTOM RAIL
YE-306
6063-T5
(8)

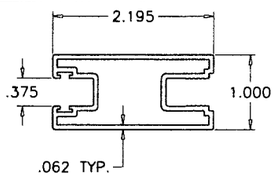

MOVING PANEL STILE
YE-301
6063-T5
(29)

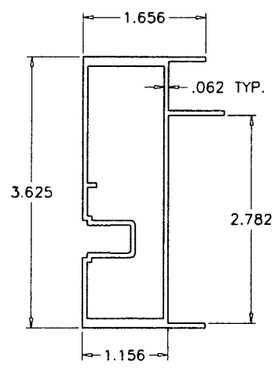

PANEL ASTRAGAL STILE
YE-344
6063-T5
(17)

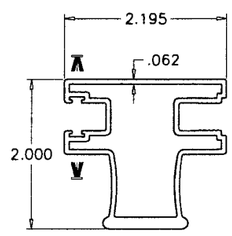

PANEL HEAVY LOCKING STILE
YE-380
6063-T5
(33)

Engr: JAVAD AHMAD
CIVIL
FLA. PE # 70592
C.A.N. 3538

MAY 0 7 2010

Product Revised
In Compliance with the Florida
Building Code
Product Approval No. 10-0518.08
Effective Date JULY 22, 2011
Manuel Perez
Product Control

AL-FAROOQ CORPORATION
ENGINEERS & PRODUCT DEVELOPMENT
1235 S.W. 87 AVE
MIAMI, FLORIDA 33174
TEL. (305) 264-8100 FAX. (305) 262-6978
COMP-ANL\W97-12AWP

SERIES 4000 ALUM SLD. GLASS DOOR (N.I.)

ARCH WINDOWS, LLC dba AWP
8130 N.W. 74TH AVE.
MEDLEY, FL. 33166
TEL. (305) 887-2646 FAX (305) 883-1309

(revisions:

no	date	by	description
B	07.20.06		UPDATED FOR 2004 FBC
C	08.02.07		NO CHANGE THIS SHEET
D	02.23.09		UPDATED FOR 2007 FBC
E	05.06.10		MANUF. NAME REVISED

date: 07-07-97
scale: 1/2" = 1"
dr. by: HAMID
chk. by:

drawing no.
W97-12

sheet 8 of 9

ITEM NO.	PART NUMBER	DESCRIPTION	MATERIAL/REMARKS
1	YE-320	FRAME HEAD (3 TRACK)	ALUMINUM (6063-T5)
1A	YE-304	FRAME HEAD (2 TRACK)	ALUMINUM (6063-T5)
2	YH-4004	FIN SEAL W'STRIPPING (.187" X .250)	ULTRAFAB
3	YH-4002	TOP SLIDE GUIDE	NYLON 6/6 SECURITY PLASTICS INC.
4	YE-307	PANEL TOP RAIL	ALUMINUM (6063-T5)
5	-	-	-
6	-	-	-
7	YE-4007	VINYL GASKET FOR 3/16" GLASS	CUSTOM PLASTICS 026-8 OR EQUIV.
8	YE-306	MOVING PANEL BOTTOM RAIL	ALUMINUM (6063-T5)
9	YF-27A	BOTTOM RAIL ASSY. SCREW	# 10-32 X 7/8" PH. MACH. SCREW
10	YH-4031	ROLLER ASSEMBLY	ALUM HOUSING WITH STEEL WHEEL
11	YE-375	FRAME SILL (3 TRACK)	ALUMINUM (6063-T5)
11A	YE-374	FRAME SILL (2 TRACK)	ALUMINUM (6063-T5)
11B	YE-373	FRAME SILL (2 TRACK)	ALUMINUM (6063-T5)
12	YH-4005	ROLLING PANEL SILL W'STRIPPING	SCHLEGEL SK1004-510 OR EQUIV.
13	YE-321	FRAME JAMB (3 TRACK)	ALUMINUM (6063-T5)
13A	YE-303	FRAME JAMB (2 TRACK)	ALUMINUM (6063-T5)
14	YE-377	FIXED PANEL CLIP (TYPE A)	ALUMINUM 2" LONG, 3/ JAMB
15	YE-325	PANEL HEAVY INTERLOCK STILE	ALUMINUM (6063-T5)
16	-	-	-
17	YE-344	PANEL HEAVY ASTRAGAL STILE	ALUMINUM (6063-T5)
18	YH-25	ASTRAGAL ASSY SCREW	#8 X 1/2" P.H. SMS
19	YH-4010	FIXED END STILE WEATHERSTRIPPING	CUSTOM PLASTICS 042-1 (VINYL)
21	-	-	-
22	-	SCREEN	OPTIONAL
23	YH-4053	MOVING PANEL SILL & TRACK CLIP (TYPE B)	ALUMINUM (1/2"X1-1/2"X3/16"X4" LONG)
24	YH-4034	BRACKET TYPE 'B'	ALUMINUM (2"X2"X1/8"X1" LONG)
26	-	-	-
27	YH-4055	FIXED PANEL UPPER CLIP (TYPE C)	ALUMINUM (2"X2"X1/8"X1" LONG)
28	YH-4054	CENTRAL FIXED PANEL CLIP (TYPE D)	ALUMINUM (2"X7/8"X1/8"X3" LONG)
29	YE-301	PANEL LOCKING STILE	ALUMINUM (6063-T5)
30	YE-379	FIXED PANEL BOTTOM RAIL	ALUMINUM (6063-T5)
31	YE-302	FIXED END STILE	ALUMINUM (6063-T5)
33	YE-355	ASTRAGAL STILE	ALUMINUM (6063-T5)
34	YE-380	PANEL HEAVY LOCKING STILE	ALUMINUM (6063-T5)
35	YH-4003	KEEPER	CAST (ZAMAK)
36	YH-4016	EXT. CONCEALED HANDLE	CAST (ZAMAK)
37	YH-4017	INT. CONCEALED HANDLE W/ KEY LOCK	CAST (ZAMAK)
38	YH-4022	DOOR HANDLE	CAST (ZAMAK)
39	YH-6006	FIN SEAL W'STRIPPING	ULTRAFAB (.115" X .50")
40	YF-2	BOT./TOP FIXED & TOP MOV. PANEL ASSY. SCREWS	#10 X 1" PH SMS
41	YF-17	BOT. MOV. PANEL ASSY./ADJ. WHEEL SCREW	#10-24 X 7/8" PH MS
42	YF-10	FRAME ASSY. SCREWS	#8 X 1" PH SMS
43	YF-18	KEEPER ASSY. SCREWS	#10 X 3/8" TH SMS
44	YF-67SS	HANDLE ASSY. SCREWS	#8-32 X 2" FH SS. MS
45	YF-68SS	CLOSED END HANDLE BINDING POST	ST. STEEL (.200" X 3/4")
46	YH-4013	INTERLOCK/ASTRAGAL TOP & BOTTOM PAD	ULTRAFAB (13/16" X 11/16" X 1-1/2")
47	-	-	-

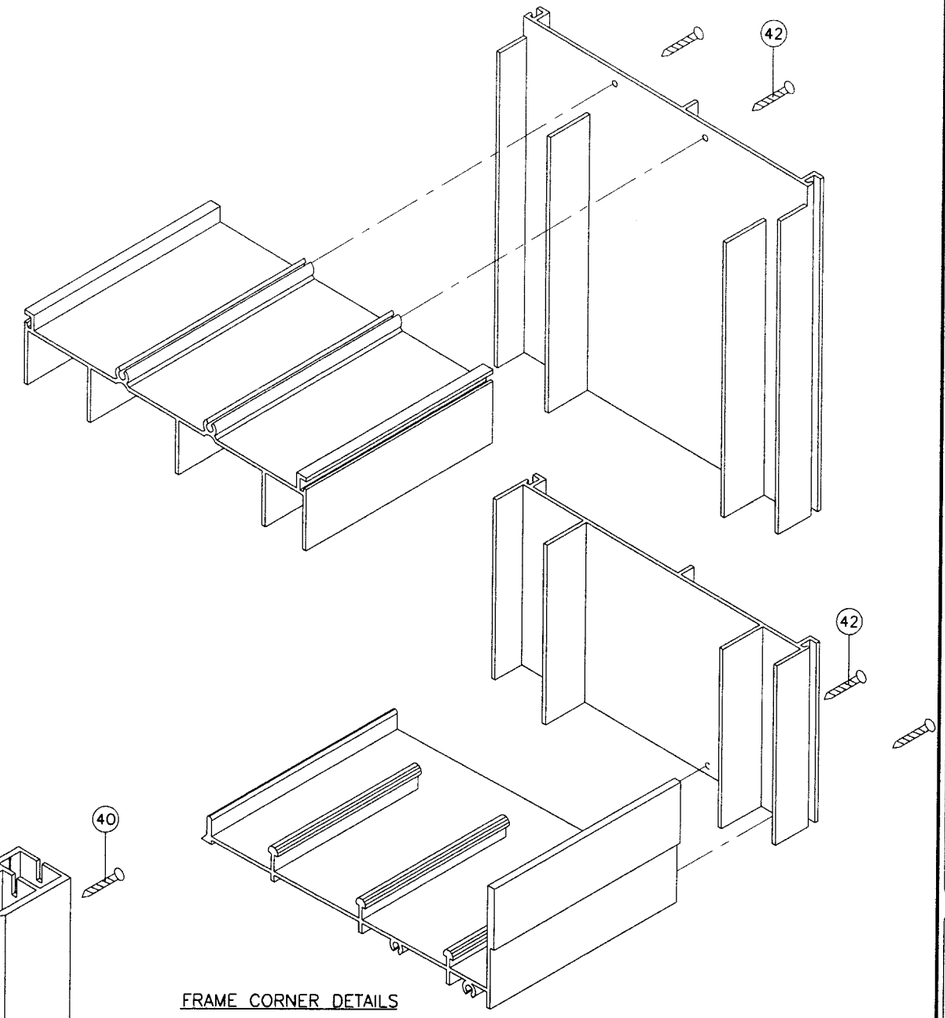

FRAME CORNER DETAILS

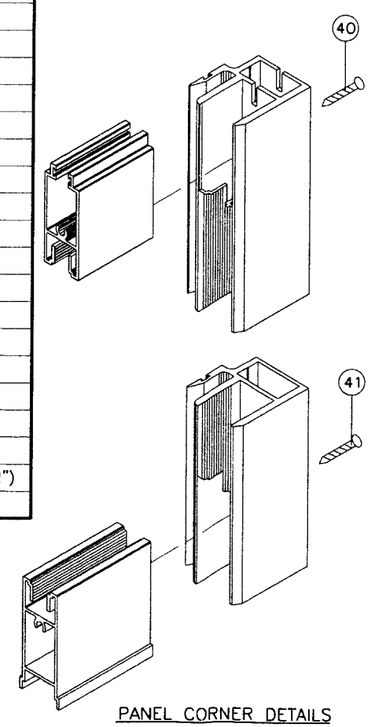

PANEL CORNER DETAILS

Engr: JAVAD AHMAD
CIVIL
FLA. PE # 70592
C.A.N. 3538

MAY 07 2010

PRODUCT REVIEWED
as complying with the Florida
Building Code
Acceptance No. 10-0518.08
Expiration Date JULY 22, 2011
By Manuel Perez
Miami-Dade Product Control
Division

AL-FAROOQ CORPORATION
ENGINEERS & PRODUCT DEVELOPMENT
1235 S.W. 87 AVE
MIAMI, FLORIDA 33174
TEL. (305) 264-8100 FAX. (305) 262-6978

COMP-ANL\W97-12AWP

SERIES 4000 ALUM SLD. GLASS DOOR (N.I.)

ARCH WINDOWS, LLC dba AWP
8130 N.W. 74TH AVE.
MEDLEY, FL. 33166
TEL. (305) 887-2646 FAX (305) 883-1309

(revisions:

no	date	by	description
B	07.20.06		UPDATED FOR 2004 FBC
C	08.02.07		DTLS. REV.
D	02.23.09		UPDATED FOR 2007 FBC
E	05.06.10		MANUF. NAME REVISED

date: 07-07-97
scale: 1/2" = 1"
dr. by: HAMID
chk. by:

drawing no.
W97-12

sheet 9 of 9