MIAMI-DADE COUNTY
BUILDING CODE COMPLIANCE OFFICE (BCCO)
PRODUCT CONTROL DIVISION

**MIAMI-DADE** COUNTY, FLORIDA
METRO-DADE FLAGLER BUILDING
**140 WEST FLAGLER STREET, SUITE 1603**
MIAMI, FLORIDA 33130-1563
(305) 375-2901 FAX (305) 372-6339
**www.miamidade.gov/buildingcode**

# NOTICE OF ACCEPTANCE (NOA)

**Greenheck Fan Corporation**
**P.O. Box 410**
**Schofield, WI 54476**

**SCOPE:** This NOA is being issued under the applicable rules and regulations governing the use of construction materials. The documentation submitted has been reviewed by Miami-Dade County Product Control Division and accepted by the Board of Rules and Appeals (BORA) to be used in Miami Dade County and other areas where allowed by the Authority Having Jurisdiction (AHJ).

This NOA shall not be valid after the expiration date stated below. The Miami-Dade County Product Control Division (In Miami Dade County) and/or the AHJ (in areas other than Miami Dade County) reserve the right to have this product or material tested for quality assurance purposes. If this product or material fails to perform in the accepted manner, the manufacturer will incur the expense of such testing and the AHJ may immediately revoke, modify, or suspend the use of such product or material within their jurisdiction. BORA reserves the right to revoke this acceptance, if it is determined by Miami-Dade County Product Control Division that this product or material fails to meet the requirements of the applicable building code.

This product is approved as described herein, and has been designed to comply with the Florida Building Code, including the High Velocity Hurricane Zone.

**DESCRIPTION: Series USGF Steel Rooftop Fans**

**APPROVAL DOCUMENT:** Drawing titled "Upblast Summary" and "SD Pitched Curb", sheets 1 and 2 of 2, dated 08/12/08; titled "USGF-140/HP-160/HP/XP, sheets 1 through 6 of 6, dated 08/13/08; titled "USGF–180/200/HP", sheets 1 through 6 of 6, dated 08/13/08, prepared by Greenheck Fan Corporation, signed and sealed by L. David Rice, P.E., bearing the Miami-Dade County Product Control revision stamp with the Notice of Acceptance number and expiration date by the Miami-Dade County Product Control Division.

**MISSILE IMPACT RATING: Large and Small Missile Impact Resistant**

**LABELING:** Each unit shall bear a permanent label with the manufacturer's name:
Greenheck Fan Corporation
1111 Greenheck Drive
Schofield, WI 54476
and following statement: "Miami-Dade County Product Control Approved", unless otherwise noted herein.

**RENEWAL** of this NOA shall be considered after a renewal application has been filed and there has been no change in the applicable building code negatively affecting the performance of this product.

**TERMINATION** of this NOA will occur after the expiration date or if there has been a revision or change in the materials, use, and/or manufacture of the product or process. Misuse of this NOA as an endorsement of any product, for sales, advertising or any other purposes shall automatically terminate this NOA. Failure to comply with any section of this NOA shall be cause for termination and removal of NOA.

**ADVERTISEMENT:** The NOA number preceded by the words Miami-Dade County, Florida, and followed by the expiration date may be displayed in advertising literature. If any portion of the NOA is displayed, then it shall be done in its entirety.

**INSPECTION:** A copy of this entire NOA shall be provided to the user by the manufacturer or its distributors and shall be available for inspection at the job site at the request of the Building Official.

This NOA **revises NOA # 10-0112.02** and consists of this page 1 and evidence page E-1, as well as approval document mentioned above.

The submitted documentation was reviewed by **Carlos M. Utrera, P.E.**

MIAMI-DADE COUNTY APPROVED

6/14/10

**NOA No. 10-0525.01**
**Expiration Date: July 12, 2012**
**Approval Date: July 07, 2010**

**Greenheck Fan Corporation**

## NOTICE OF ACCEPTANCE: EVIDENCE SUBMITTED

**A. DRAWINGS** ***"Submitted under NOA # 08-0519.01"***

1. Drawing titled "Upblast Summary" and "SD Pitched Curb", sheets 1 and 2 of 2, dated 08/12/08; titled "USGF-140/HP-160/HP/XP, sheets 1 through 6 of 6, dated 08/13/08; titled "USGF–180/200/HP", sheets 1 through 6 of 6, dated 08/13/08, prepared by Greenheck Fan Corporation, signed and sealed by L. David Rice, prepared by Greenheck Fan Corporation, signed and sealed by L. David Rice, P.E.

**B. TESTS** ***"Submitted under NOA # 10-0112.02"***

1. Test report on 1) Uniform Static Air Pressure Test per FBC, TAS 202-94
   2) Large Missile Impact Test per FBC, TAS 201-94,
   3) Cyclic Wind Pressure Test per FBC, TAS 203-94,
   along with marked-up drawings and installation diagram of three Model USGF-200 Belt Drive Fans on SD Curb, prepared by Architectural Testing, Inc., Test Report No. **94149.01-602-18**, dated 12/21/09, signed and sealed by Joseph A. Reed, P.E.

***"Submitted under NOA # 08-0519.01"***

2. Test report on 1) Uniform Static Air Pressure Test per FBC, TAS 202-94
   2) Large Missile Impact Test per FBC, TAS 201-94,
   along with marked-up drawings and installation diagram of Model USGF-200 Rooftop Fan w/ SD Curb, prepared by Hurricane Test Laboratory, LLC, Test Report No. **0325-1207-06**, dated 03/10/07, signed and sealed by Vinu J. Abraham, P.E.
3. Test reports on Large Missile Impact Test per FBC, TAS 201-94, along with marked-up drawings and installation diagram of Models H-CUBE-161 and 240 Fans with H-GPF Curbs, prepared by Architectural Testing, Inc, Test Reports No. **70535.01-602-18** and **70544.01-602-18**, both dated 03/05/07 and signed and sealed by Joseph A. Reed, P.E.

**C. CALCULATIONS** ***"Submitted under NOA # 08-0519.01"***

1. Anchor and structural calculations of USGF 180 Fan Housing and H-GPF and SD Curbs, prepared by Rice Engineering, dated 04/17/07, signed and sealed by L. David Rice, P.E.

**D. QUALITY ASSURANCE**

1. Miami Dade Building Code Compliance Office (BCCO)

**E. MATERIAL CERTIFICATIONS**

1. None.

**F. STATEMENTS**

1. Code compliance letter (**FBC 2007**) issued by Rice Engineering, dated 05/13/10, signed and sealed by L. David Rice, P.E.
2. No financial interest letter issued by Rice Engineering, dated 04/18/07, signed and sealed by L. David Rice, P.E.
3. Code compliance letter issued by Hurricane Test Laboratories, LLC, dated 03/10/07, signed and sealed by Vinu J. Abraham, P. E.
4. Code compliance letter issued by Architectural Testing, Inc, dated 12/22/09, signed and sealed by Joseph A. Reed, P.E.

6/14/10

**Carlos M. Utrera, P.E.**
**Product Control Examiner**
**NOA No. 10-0525.01**
**Expiration Date: July 12, 2012**
**Approval Date: July 07, 2010**

| REVISION | DCR | BY | DATE | SYM |
|---|---|---|---|---|
| ADDED UNITS NOTE | | DFY | 08/13 2008 | 3 |

NOTE:
ALL DIMENSIONS ARE IN INCHES

| ITEM | QUANTITY | DESCRIPTION | MATERIAL | DIMENSIONS |
|---|---|---|---|---|
| 1 | 1 | HOUSING ASSY. | CRS DS | 16 GA. X 20.35 X 27.70 |
| 2 | 1 | HOODBAND | CRS CS-B | 16 GA. X 20.94 X 17.00 |
| 3 | 1 | HOOD | CRS DS | 16 GA. X 21.24 X 2.13 |
| 4 | 1 | SUPPORT PAN | GALVANIZED G90 | 20 GA. X 20.90 X 1.50 |
| 5 | 8 | PAL NUT | SPRING STEEL | ¼-20 |
| 6 | 4 | SCREW | STAINLESS STEEL | ¼-20 X 5/8 |
| 7 | 16 | TREAD CUTTING SCREW | ANSI B18.6.4 | ¼-20 X 3/4 |
| 8 | 4 | RIVET, SEMI TUBULAR | 5052 ALUMINUM | ¼ X 5/16 |
| 9 | 4 | VERTICAL SUPPORT | GALVANIZED G90 | 16 GA. 11.50 X .89 X .59 |
| 10 | 4 | HOODBAND CLIP | GALVANIZED G90 | 16 GA. 2.44 X 1.25 X 1.13 |
| 11 | 4 | HORIZONTAL SUPPORT | GALVANIZED G90 | 16 GA. 4.68 X 1.03 X 1.50 |
| 12 | 1 | PLUG, 4" VITON SEAL | STEEL W. RUBBER SEAL | 4" Dia. |
| 13 | 1 | CLEAN OUT TUBE | CRS CS-B | 4.25 O.D. X 4.00 I.D. X 1.50 |
| 14 | 4 | CURB SUPPORT ANGLE | A572 STEEL | 12 GA. 2.00 X 2.00 X 22.61 FORMED ANGLE |
| 15 | 4 | SD CURB SIDE | A572 STEEL | 12 GA. 24.75 X 24 HIGH |
| 16 | 1 | HINGE FRAME | GALVANIZED G90 | 16 GA. 25.50 X 25.50 X 4.58 HIGH |
| 17 | 4 | HINGE BRACKET | 1100-H14ALUMINUM | .190 4.28 X 2.48 |
| 18 | 2 | CABLE ASSY. | .125 GALVANIZED 7 X 13 | ø.125 X 36.0 |
| 19 | 7 | NUT | GR2 IFI 100/107 | ¼-20 |
| 20 | 4 | WASHER, NYLON | NYLON | ½ X .257 X ⅛ |
| 21 | 2 | HEX BOLT | GR2 ANSI B18.2.2 | ¼-20 X 1 |
| 22 | 6 | WELD STUD | GR2 ANSI B18.2.2 | ¼-20 X ¾ |
| 23 | 4 | WASHER, FLAT | ANSI B18.2.1 | 1.25 X .25 X .063 |

PRODUCT REVISED
as complying with the Florida
Building Code
Acceptance No 10-0525.01
Expiration Date 07/12/2012
By [signature]
Miami Dade Product Control
Division

PRODUCT REVISED
as complying with the Florida
Building Code
Acceptance No 10-0112.02
Expiration Date 07/12/2012
By [signature]
Miami Dade Product Control
Division

| DESIGN LIMITS | |
|---|---|
| Max: Wind Velocity: | 150 mph (67 m/s) |
| Max: Desigh Load: | ±130 psf (6.2 Kpa) |
| Max: Overall Enclosure Dia.: | 28.95 in. (735 mm) |
| Max: Overall Unit Height W/Curb: | 53.00 in. (1346 mm) |
| Max: Overall Unit Height W/O Curb: | 29.00 in. (737 mm) |
| Max: Curb Cap Sq. Dim.: | 26.00 in. (660 mm) |
| Max: Roof Curb Sq. Dim.: | 24.75 in. (629 mm) |
| Max: Roof Curb Height: | 24.00 in. (610 mm) |
| Qualified Substrates | 3000 psi Concrete, ⅛" Steel |

PRODUCT REVISED
as complying with the Florida
Building Code
Acceptance No 08-0519.01
Expiration Date 7-12-12
By [signature]
Miami Dade Product Control
Division

RICE ENGINEERING
105 School Creek Trail
Luxemburg, WI 54217
Phone 920.845.1042
Fax 920.845.1048
www.rice-inc.com

Florida Firm No F-01000005061
Certificate of Authorization: #9090
L David Rice
Registration No: 50923

L. DAVID RICE

AUG 2 1 2008

GREENHECK
P.O.BOX 410 SCHOFIELD, WISCONSIN 54476-0410

TITLE
USGF-140/HP
USGF-160/HP/XP

DRAWN BY YAKLOVICH
DATE 08/13/2008
SUPERSEDES
SCALE 1/1
SHEET NO.
REV. 3
REV. DATE
SHEET 1 OF 6

| SYM | DATE | BY | DCR | REVISION |
|---|---|---|---|---|
| 3 | 08/13 2008 | DFY | | ADDED UNITS NOTE |

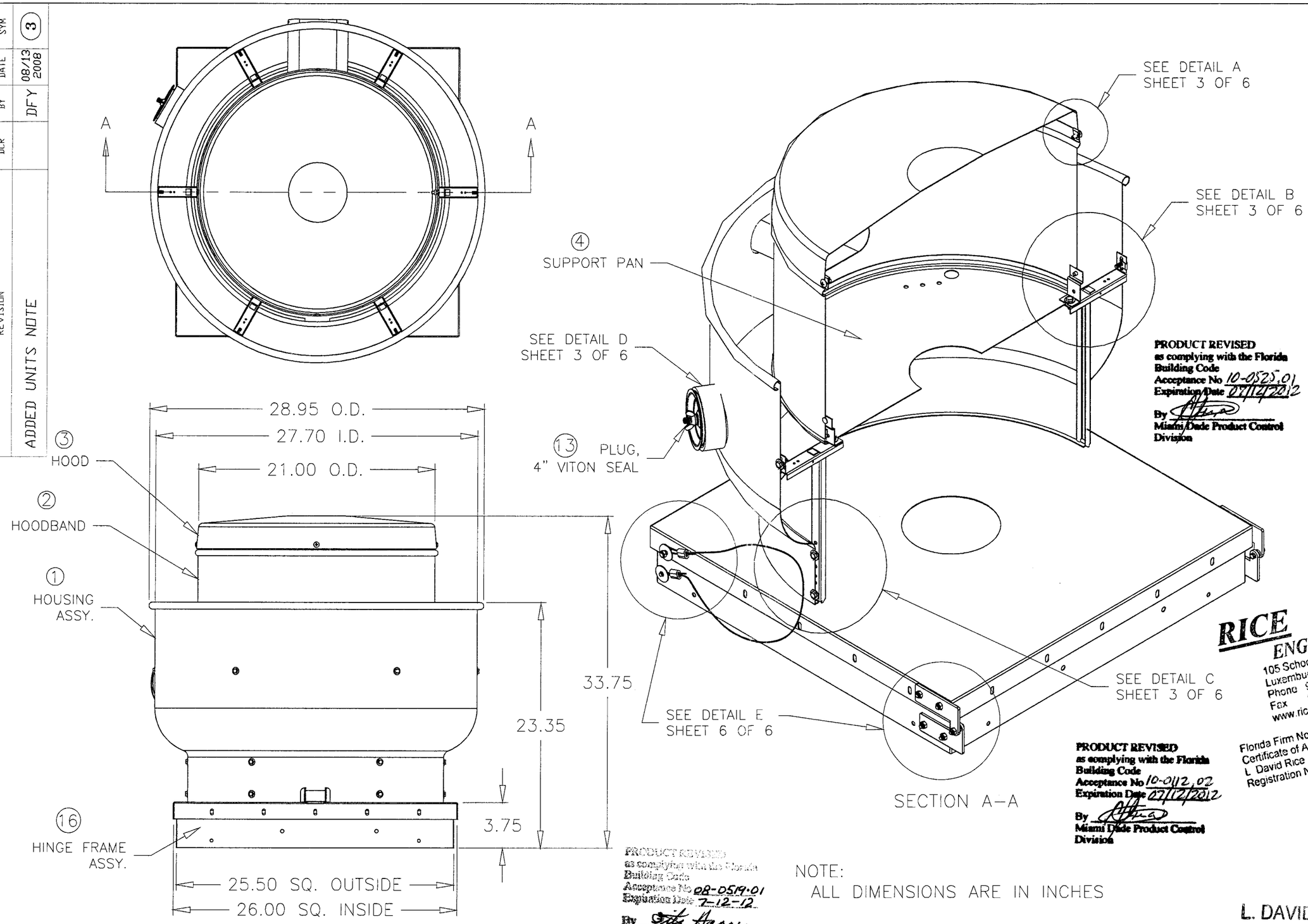


PRODUCT REVISED
as complying with the Florida Building Code
Acceptance No 10-0525.01
Expiration Date 07/12/2012
By
Miami-Dade Product Control Division

PRODUCT REVISED
as complying with the Florida Building Code
Acceptance No 10-0112.02
Expiration Date 07/12/2012
By
Miami Dade Product Control Division

PRODUCT REVISED
as complying with the Florida Building Code
Acceptance No 08-0519.01
Expiration Date 7-12-12
By Gilly Harris
Miami Dade Product Control Division

NOTE:
ALL DIMENSIONS ARE IN INCHES


RICE ENGINEERING
105 School Creek Trail
Luxemburg, WI 54217
Phone 920.845 1042
Fax 920.845 1048
www.rice-inc.com

Florida Firm No F-01000005061
Certificate of Authorization #9090
L David Rice
Registration No. 50923

L. DAVID RICE


AUG 21 2008

| | |
|---|---|
| REV | |
| REV. DATE | |
| REV. | 3 |
| DRAWN BY | YAKLOVICH |
| DATE | 08/13/2008 |
| SUPERSEDES | |
| SCALE | 1/10 |
| SHEET NO. | SHEET 2 OF 6 |


GREENHECK
P.O.BOX 410 SCHOFIELD, WISCONSIN 54476-0410


TITLE
USGF-140/HP
USGF-160/HP/XP

| SYM | DATE | BY | DCR | REVISION |
|---|---|---|---|---|
| 3 | 08/13 2008 | DFY | | ADDED UNITS NOTE |

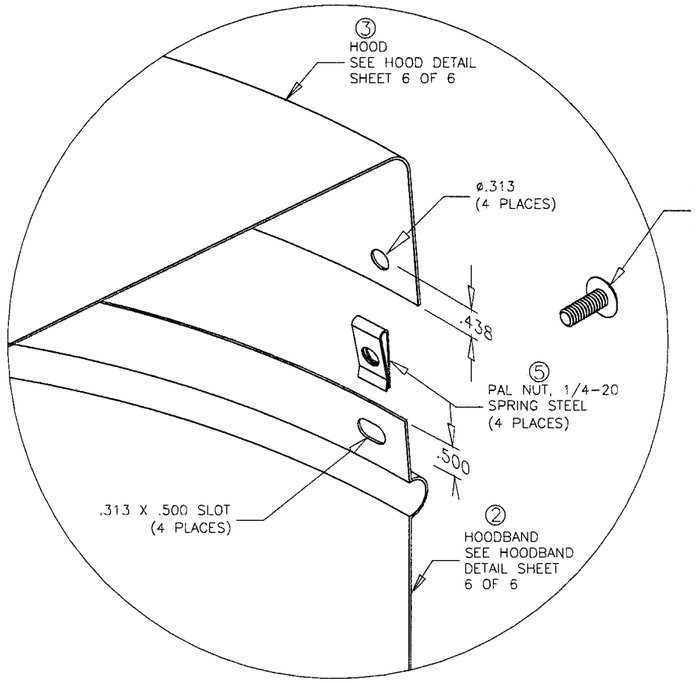


DETAIL A

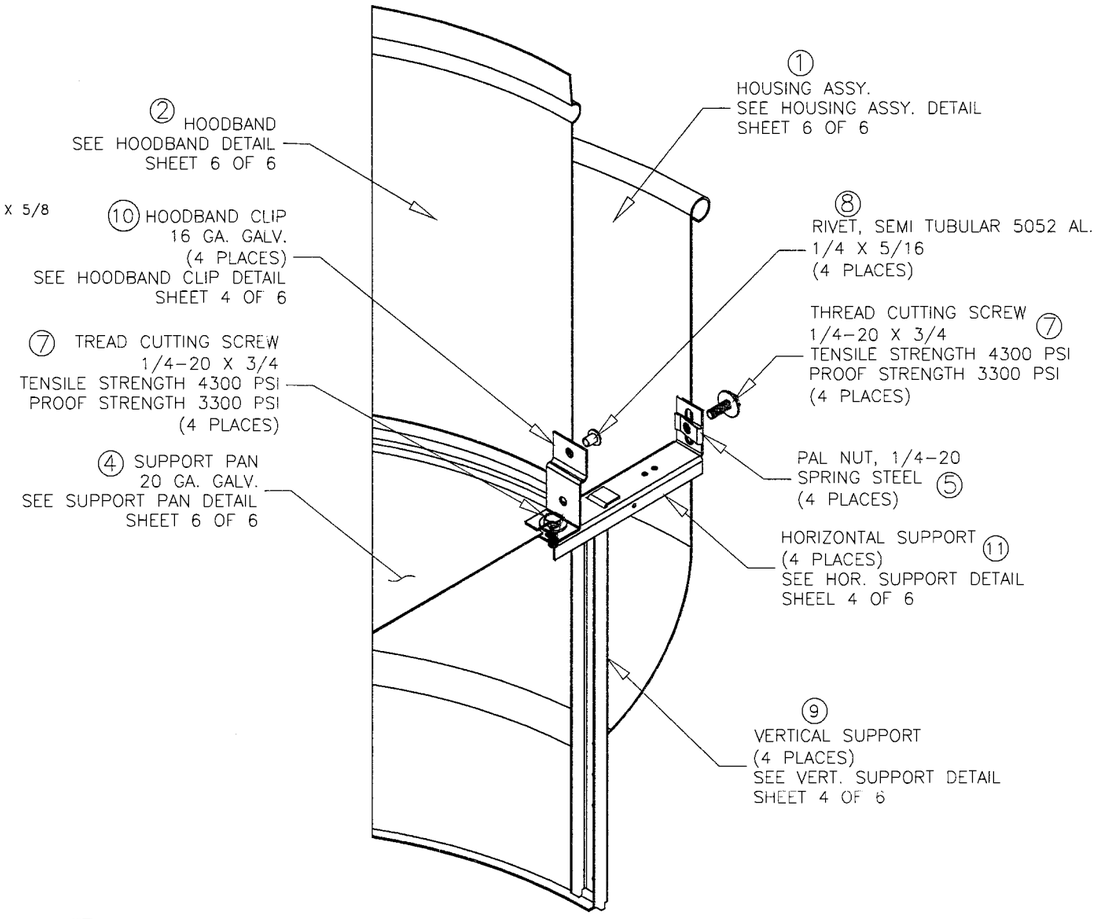


DETAIL B

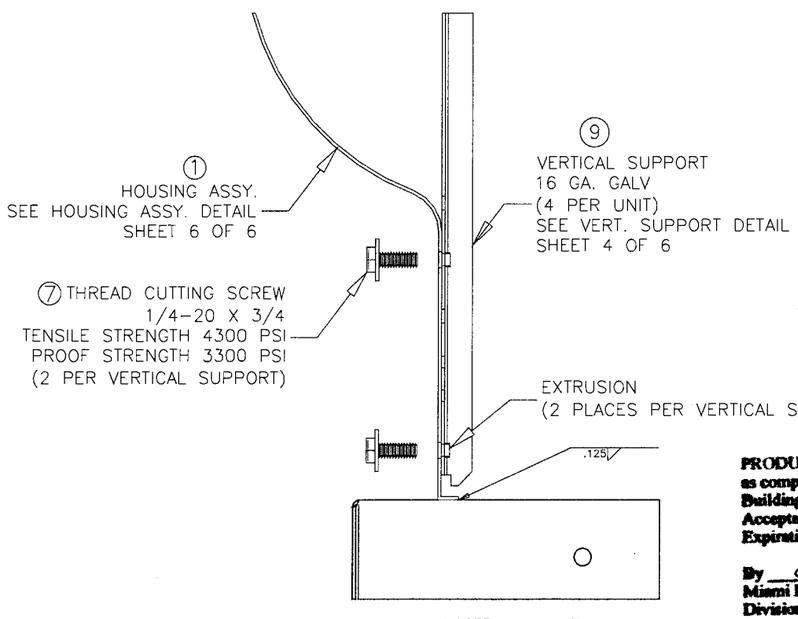


DETAIL C

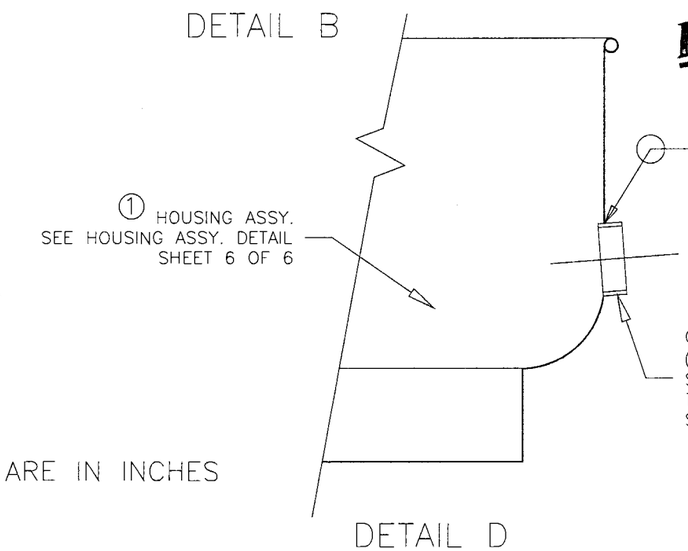


DETAIL D

NOTE:
ALL DIMENSIONS ARE IN INCHES

PRODUCT REVISED
as complying with the Florida
Building Code
Acceptance No 10-0525.01
Expiration Date 07/12/2012
By
Miami Dade Product Control
Division

PRODUCT REVISED
as complying with the Florida
Building Code
Acceptance No 08-0519.01
Expiration Date 7-12-12
By
Miami Dade Product Control
Division

PRODUCT REVISED
as complying with the Florida
Building Code
Acceptance No 10-0112.02
Expiration Date 07/12/2012
By
Miami Dade Product Control
Division


RICE ENGINEERING
105 School Creek Trail
Luxemburg, WI 54217
Phone 920.845.1042
Fax 920.845.1048
www.rice-inc.com
Florida Firm No F-01000005061
Certificate of Authorization #9090
L David Rice
Registration No. 50923


L. DAVID RICE

AUG 21 2008

| REV | REV. DATE |
|---|---|
| | |

REV. 3

DRAWN BY YAKLOVICH
DATE 08/13/2008
SUPERSEDES

SCALE 1/1
SHEET NO.

SHEET 3 OF 6


GREENHECK
P.O.BOX 410 SCHOFIELD, WISCONSIN 54476-0410


TITLE
USGF-140/HP
USGF-160/HP/XP

| SYM | DATE | BY | DCR | REVISION |
|---|---|---|---|---|
| 3 | 08/13 2008 | DFY | | ADDED UNITS NOTE |

NOTE:
ALL DIMENSIONS ARE IN INCHES

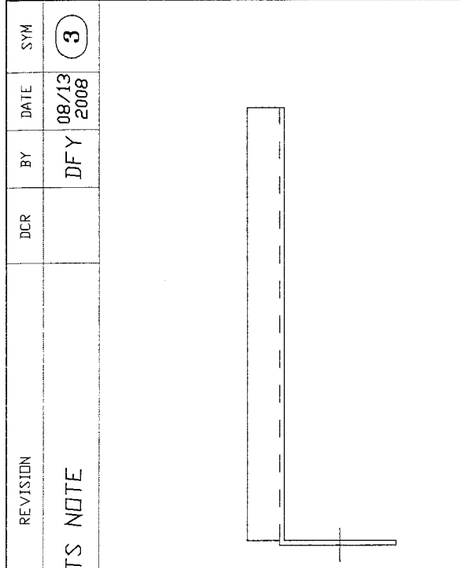


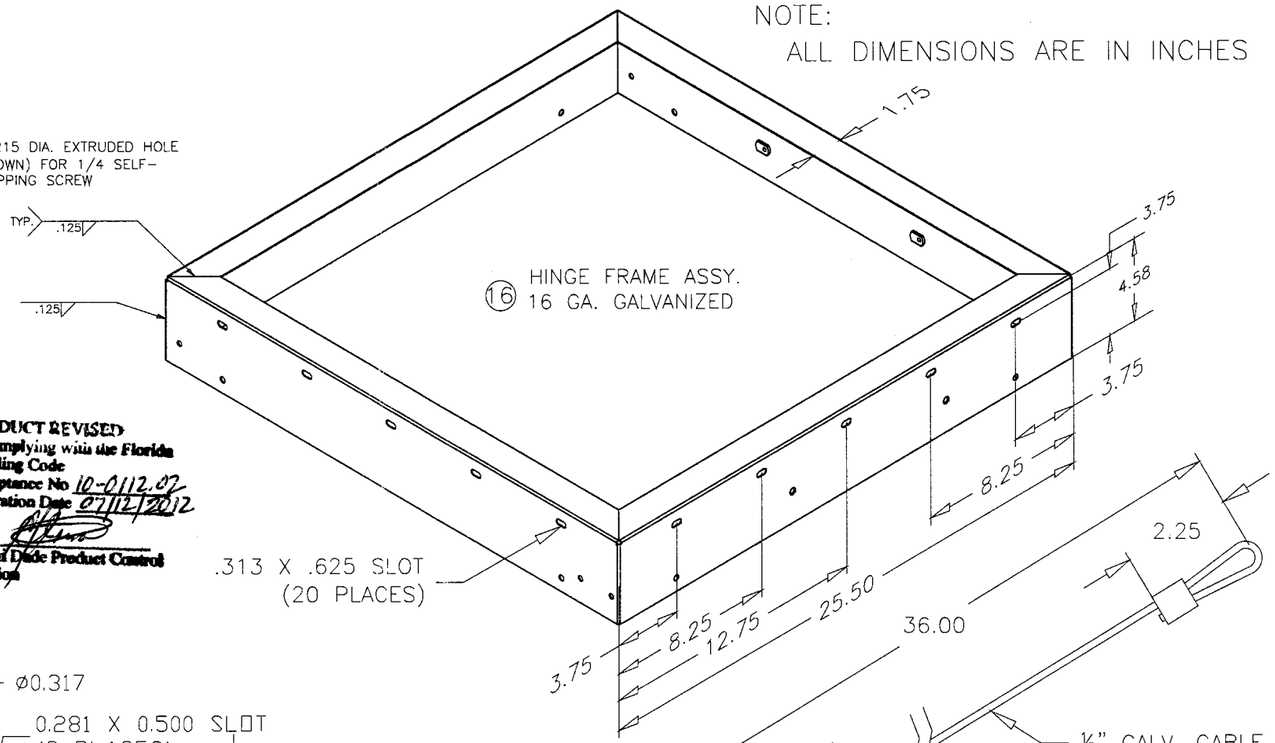


PRODUCT REVISED
as complying with the Florida Building Code
Acceptance No 10-0112.07
Expiration Date 07/12/2012
By
Miami Dade Product Control Division

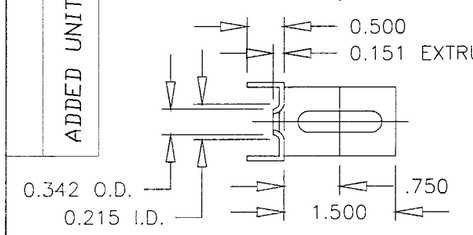


11 HOR. SUPPORT DETAIL
16 GA. GALVANIZED

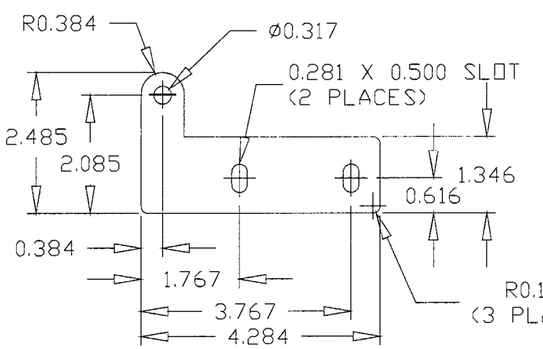


17 HINGE BRACKET DETAIL
.190 ALUM.

PRODUCT REVISED
as complying with the Florida Building Code
Acceptance No 08-0519
Expiration Date 7-12-12
By
Miami Dade Product Control Division

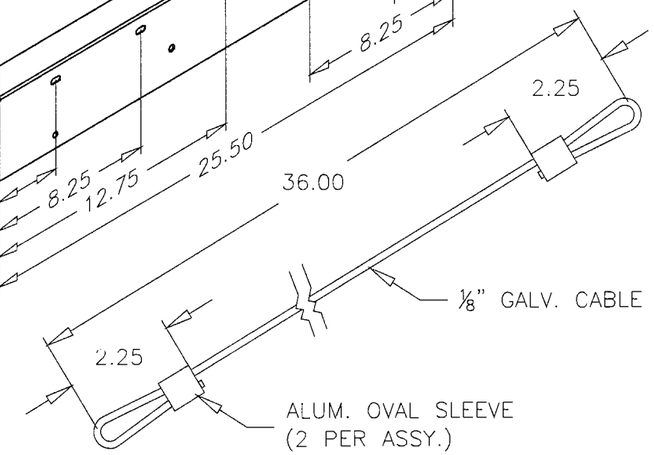


18 CABLE ASSY.
1/8" GALVANIZED CABLE

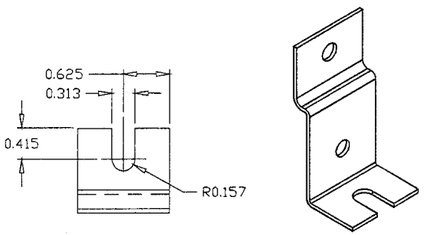


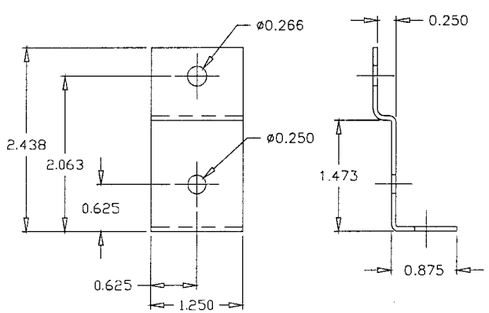


10 HOODBAND CLIP DETAIL
16 GA. GALVANIZED

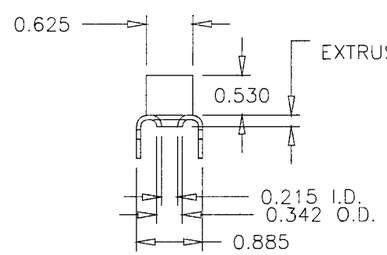


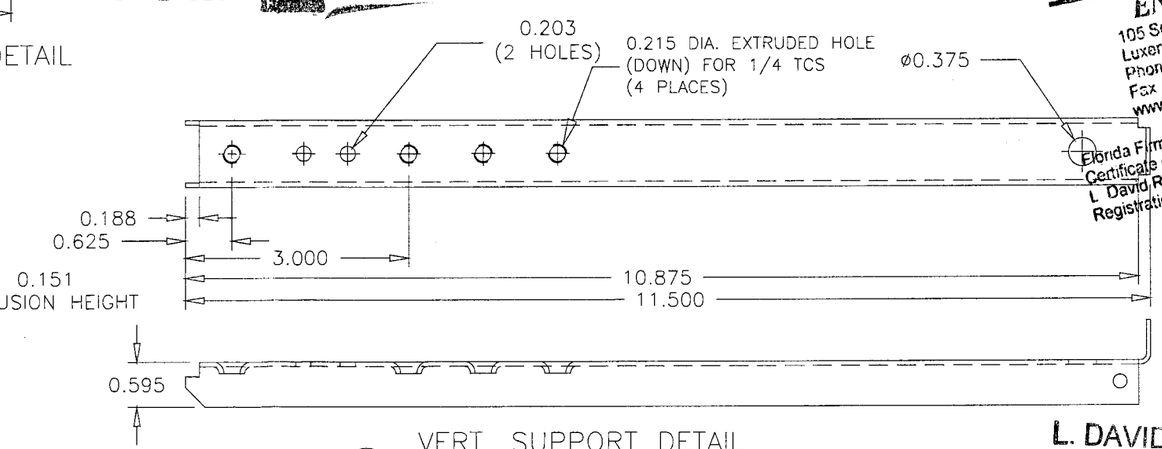


9 VERT. SUPPORT DETAIL
16 GA. GALVANIZED

PRODUCT REVISED
as complying with the Florida Building Code
Acceptance No 10-0525.01
Expiration Date 07/12/2012
By
Miami Dade Product Control Division

RICE ENGINEERING
105 School Creek Trail
Luxemburg, WI 54217
Phone 920.845.1042
Fax 920.845.1048
www.rice-inc.com
Florida Firm No. F-01000005061
Certificate of Authorization: #9000
L. David Rice
Registration No: 50923

L. DAVID RICE

| REV | REV. DATE |
|---|---|
| | |

REV. 3

DRAWN BY YAKLOVICH
DATE: 08/13/2008
SUPERSEDES
SCALE 1/1
SHEET NO.
SHEET 4 OF 6

GREENHECK
P.O.BOX 410 SCHOFIELD, WISCONSIN 54476-0410

TITLE
USGF-140/HP
USGF-160/HP/XP

AUG 21 2008

| REVISION | DCR | BY | DATE | SYM |
|---|---|---|---|---|
| ADDED UNITS NOTE | | DFY | 08/13 2008 | 3 |

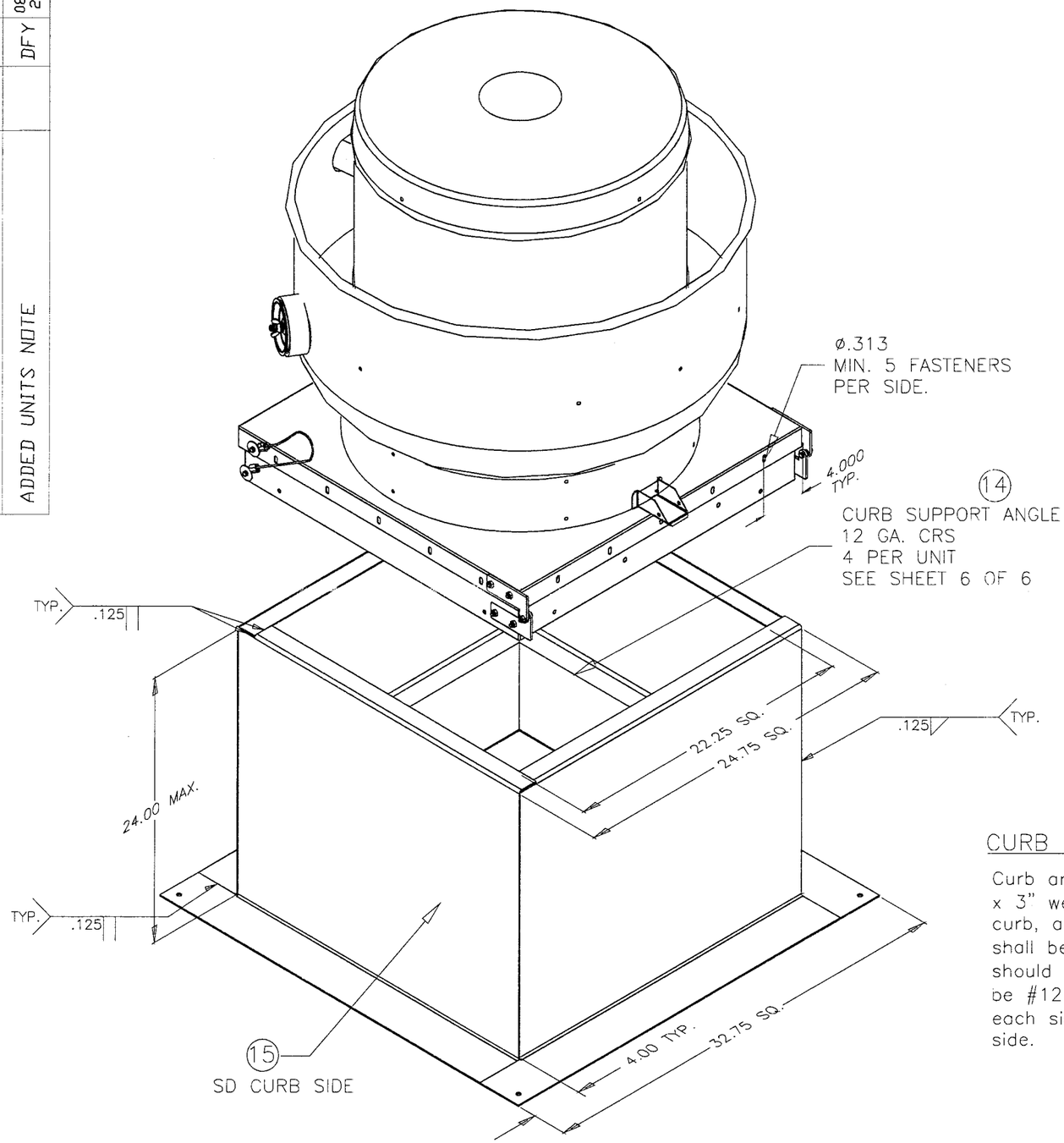


NOTE:
ALL DIMENSIONS ARE IN INCHES

PRODUCT REVISED
as complying with the Florida
Building Code
Acceptance No 10-0525.01
Expiration Date 07/12/2012
By
Miami Dade Product Control
Division

PRODUCT REVISED
as complying with the Florida
Building Code
Acceptance No 10-0112.02
Expiration Date 07/12/2012
By
Miami Dade Product Control
Division

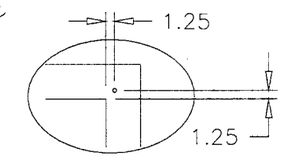


CURB CORNER
ANCHOR DETAIL

PRODUCT REVISED
as complying with the Florida
Building Code
Acceptance No 08-0519.01
Expiration Date 7-12-12
By
Miami Dade Product Control
Division

RICE ENGINEERING
105 School Creek Trail
Luxemburg, WI 54217
Phone 920.845.1042
Fax 920.845.1048
www.rice-inc.com

Florida Firm No F-01000005061
Certificate of Authorization #9000
L. David Rice
Registration No. 50923

CURB NOTE:

Curb anchorage should be into minimum 3000 PSI concrete. Use 3" x 3" wedge anchors or equal, one each corner, each side at center of curb, and maximum 8 inches on center spacing along the side. Anchors shall be minimum 1 5/8" embedment and 1 3/4" edge distance. Or should be into minimum 12 ga (1/8") steel member. Fasteners shall be #12-14 self drilling screws or equal, 1 fastener each corner, 1 each side at center of unit and maximum on center spacing of 8" each side.

L. DAVID RICE

AUG 21 2008

REV
REV. DATE

DRAWN BY YAKLOVICH
DATE: 08/13/2008
SUPERSEDES
SCALE 1/1
SHEET NO.
REV. 3
SHEET 5 OF 6

GREENHECK
P.O.BOX 410 SCHOFIELD, WISCONSIN 54476-0410

TITLE
USGF-140/HP
USGF-160/HP/XP

| SYM | DATE | BY | DCR | REVISION |
|---|---|---|---|---|
| 3 | 08/13 2008 | DFY | | ADDED UNITS NOTE |

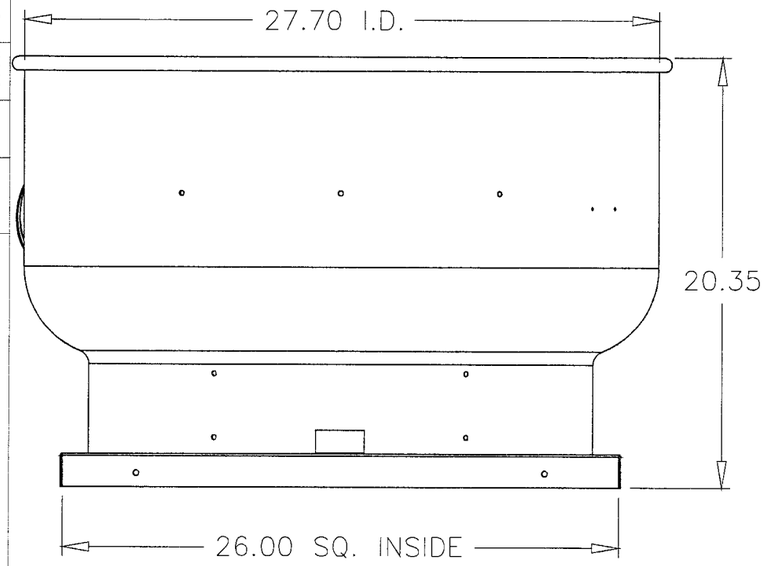


① HOUSING ASSY. CRS

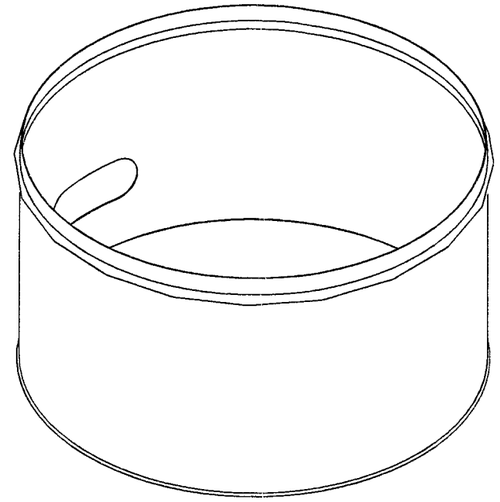

② HOODBAND 16 GA. CRS
ø20.94 .0 I.D. 17" TALL

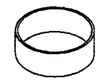

⑬ CLEANOUT TUBE
4.25 O.D. X 4.00 I.D. X 1.50

⑭ CURB SUPPORT ANGLE 12 GA. CRS
2.00 X 2.00 X 22.61

NOTE:
ALL DIMENSIONS ARE IN INCHES

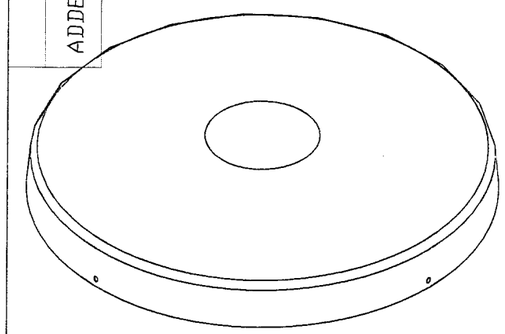

③ HOOD 16 GA. CRS
ø21.24 O.D. 2.13" TALL

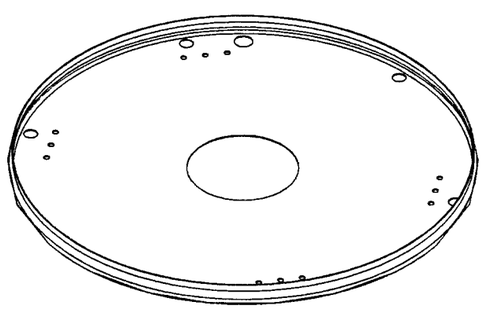

④ SUPPORT PAN 20 GA. GALVANIZED
ø20.9 O.D. 1.5" TALL

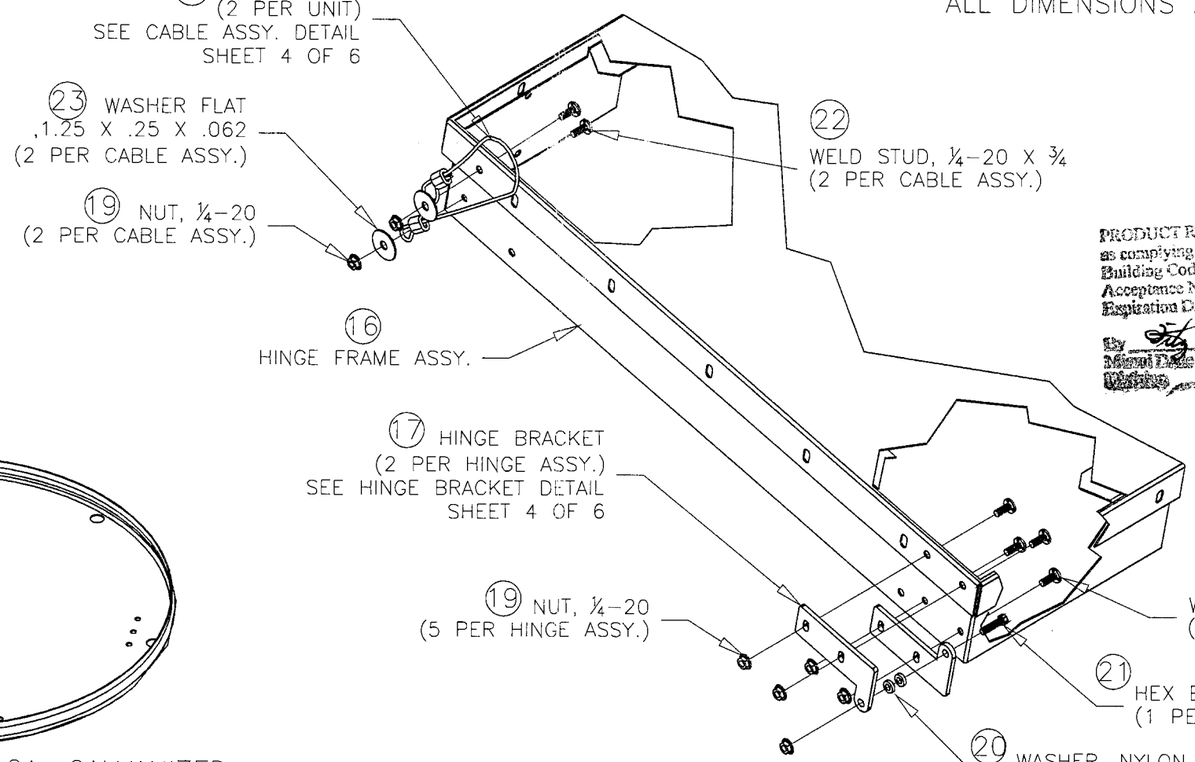


DETAIL E

PRODUCT REVISED
as complying with the Florida
Building Code
Acceptance No 10-0112.02
Expiration Date 07/12/2012
By
Miami Dade Product Control
Division

PRODUCT REVISED
as complying with the Florida
Building Code
Acceptance No 10-0525.01
Expiration Date 07/12/2012
By
Miami Dade Product Control
Division

PRODUCT REVISED
as complying with the Florida
Building Code
Acceptance No 08-0519.01
Expiration Date 7-12-12
By
Miami Dade Product Control
Division

RICE ENGINEERING
105 School Creek Trail
Luxemburg WI 54217
Phone 920 845 1042
Fax 920 845 1048
www.rice-inc.com

Florida Firm No F-01000005061
Certificate of Authorization: #9090
L David Rice
Registration No. 50923

L. DAVID RICE

AUG 21 2008

GREENHECK
P.O.BOX 410 SCHOFIELD, WISCONSIN 54476-0410

USGF-140/HP
USGF-160/HP/XP

| REV | REV. DATE | REV. |
|---|---|---|
| | | 3 |

DRAWN BY YAKLOVICH
DATE 08/13/2008
SUPERSEDES
SCALE 1/8
SHEET NO. SHEET 6 OF 6

| REVISION | DCR | BY | DATE | SYM |
|---|---|---|---|---|
| CORRECTED 'E' DIM FOR USGF-180/HP AND USGF-200/HP ADDED UNITS NOTE | | DFY | 08/13 2008 | 3 |

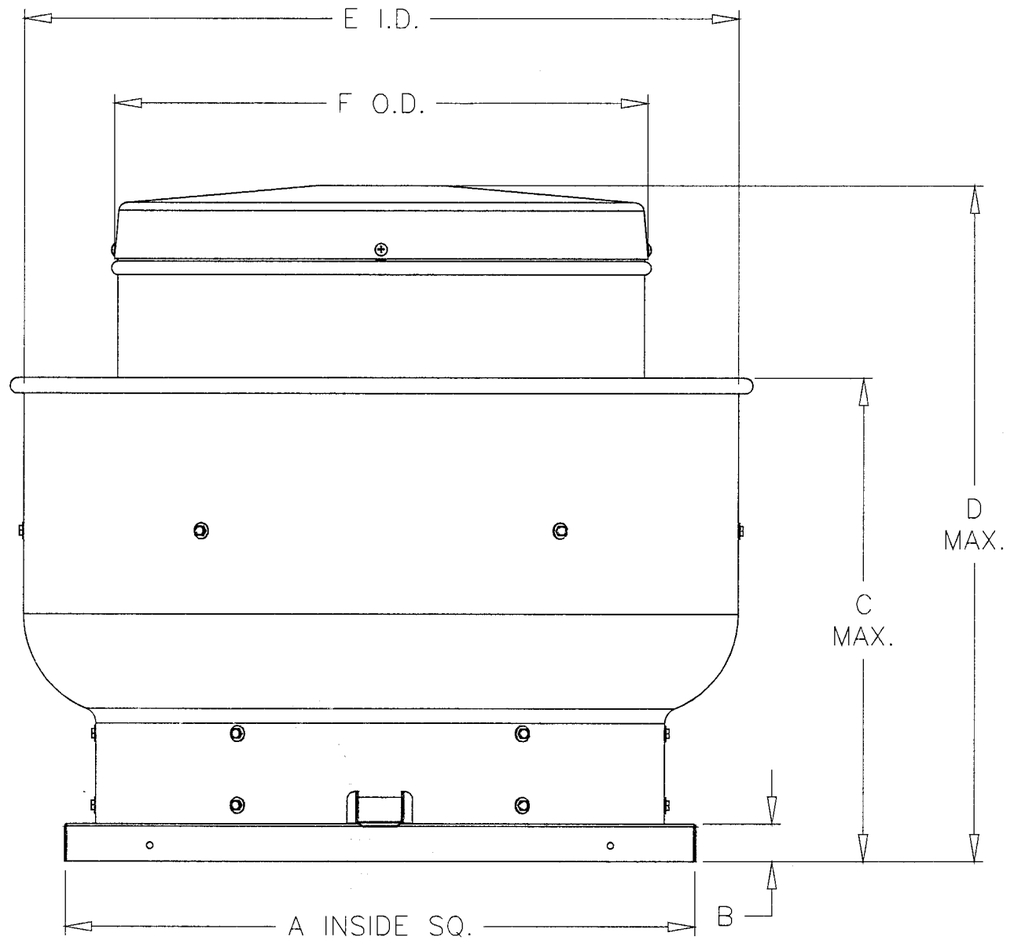


ALL DIMENSIONS ARE IN INCHES

| MODEL | A | B | C | D | E | F |
|---|---|---|---|---|---|---|
| H-CUE-060 | 17.00 | 1.75 | 13.13 | 15.41 | 18.38 | 12.63 |
| H-CUE-065 | 17.00 | 1.75 | 13.13 | 15.41 | 18.38 | 12.63 |
| H-CUE-070 | 17.00 | 1.75 | 13.13 | 15.41 | 18.38 | 12.63 |
| H-CUE-075 | 17.00 | 1.75 | 13.13 | 15.41 | 18.38 | 12.63 |
| H-CUE-080 | 19.00 | 1.75 | 13.13 | 15.37 | 21.00 | 14.38 |
| H-CUE-085 | 19.00 | 1.75 | 13.13 | 15.37 | 21.00 | 14.38 |
| H-CUE-090 | 19.00 | 1.75 | 13.13 | 15.37 | 21.00 | 14.38 |
| H-CUE-095 | 19.00 | 1.75 | 15.19 | 17.31 | 21.00 | 14.38 |
| H-CUE-098 | 19.00 | 1.75 | 19.50 | 15.37 | 23.63 | 14.38 |
| H-CUE-101 | 19.00 | 1.75 | 19.50 | 27.00 | 23.63 | 18.63 |
| H-CUE-121 | 19.00 | 1.75 | 19.50 | 27.00 | 23.63 | 18.63 |
| H-CUE-131 | 19.00 | 1.75 | 19.50 | 27.00 | 23.63 | 18.63 |
| H-CUE-141 | 22.00 | 1.75 | 20.35 | 32.20 | 27.70 | 21.00 |
| H-CUE-161/HP | 22.00 | 1.75 | 20.35 | 32.20 | 27.70 | 21.00 |
| H-CUE-180/HP | 30.00 | 1.75 | 22.72 | 31.57 | 34.20 | 25.20 |
| H-CUE-200 | 30.00 | 1.75 | 22.72 | 31.57 | 34.20 | 25.20 |
| H-CUBE-098 | 19.00 | 1.75 | 19.50 | 27.00 | 23.63 | 18.63 |
| H-CUBE-101/HP | 19.00 | 1.75 | 19.50 | 27.00 | 23.63 | 18.63 |
| H-CUBE-121 | 19.00 | 1.75 | 19.50 | 27.00 | 23.63 | 18.63 |
| H-CUBE-131 | 19.00 | 1.75 | 19.50 | 27.00 | 23.63 | 18.63 |
| H-CUBE-141/HP | 22.00 | 1.75 | 20.35 | 32.20 | 27.70 | 21.00 |
| H-CUBE-161/HP/XP | 22.00 | 1.75 | 20.35 | 32.20 | 27.70 | 21.00 |
| H-CUBE-180/HP | 30.00 | 1.75 | 22.72 | 33.75 | 34.20 | 25.20 |
| H-CUBE-200/HP | 30.00 | 1.75 | 22.72 | 33.75 | 34.20 | 25.20 |
| H-CUBE-220/HP | 34.00 | 1.75 | 27.25 | 40.00 | 40.90 | 29.20 |
| H-CUBE-240/HP/XP | 34.00 | 1.75 | 27.25 | 40.00 | 40.90 | 29.20 |
| H-CUBE-300/HP/XP | 40.00 | 1.75 | 30.84 | 44.50 | 48.31 | 36.02 |
| USGF-140/HP | 26.00 | 1.75 | 20.35 | 30.75 | 27.70 | 21.00 |
| USGF-160/HP/XP | 26.00 | 1.75 | 20.35 | 30.75 | 27.70 | 21.00 |
| USGF-180/HP | 30.00 | 1.75 | 22.72 | 36.75 | 34.20 | 21.00 |
| USGF-200/HP | 30.00 | 1.75 | 22.72 | 36.75 | 34.20 | 21.00 |

REV REV. DATE REV. 3

DRAWN BY YAKLOVICH DATE 08/12/2008 SUPERSEDES SCALE 1/1 SHEET NO. SHEET 1 OF 2

GREENHECK P.O.BOX 410 SCHOFIELD, WISCONSIN 54476-0410

TITLE UPBLAST SUMMARY

RICE ENGINEERING
105 School Creek Trail
Luxemburg, WI 54217
Phone: 920.845.1042
Fax: 920.845.1043
www.rice-inc.com

Florida Firm No: F-01000005061
Certificate of Authorization: #9090
L. David Rice
Registration No: 50923

PRODUCT REVISED
as complying with the Florida Building Code
Acceptance No 10-0525.01
Expiration Date 07/12/2012
By
Miami Dade Product Control Division

PRODUCT REVISED
as complying with the Florida Building Code
Acceptance No 10-0112.02
Expiration Date 07/12/2012
By
Miami Dade Product Control Division

PRODUCT REVISED
as complying with the Florida Building Code
Acceptance No 08-0519.01
Expiration Date 7-12-12
By Sity Harris
Miami Dade Product Control Division

NOTES:

1. MODELS H-CUE, H-CUBE, AND USGF HAVE BEEN SUCCESSFULLY TESTED IN ACCORDANCE WITH MAIAMI DADE TEST PROTOCOL TAS-201 (LARGE MISSILE IMPACT) AND TAS-202 (STATIC LOADING).
2. ROOF STRUCTURE MUST BE DESIGNED TO WITHSTAND THE WEIGHT AND LOADING TRANSMITTED BY ROOF TOP FANS. FASTENERS SHALL BE AS SPECIFIED AND INSTALLED AS DETAILED.
3. DESIGN TESTING AND INSTALLATION CONFORMS TO 2004 FLORIDA BUILDING CODE AND ITS 2005 AND 2006 SUPPLEMENTS.
4. DESIGN TESTING AND INSTALLATION CONFORMS TO AISC MANUAL OF STEEL CONSTRUCTION AND ALUMINUM DESIGN MANUAL.
5. FAN CURBS MUST BE ANCHORED TO ROOF FRAMING MEMBERS AND NOT TO THE ROOFING SYSTEM.

AUG 21 2008

L. DAVID RICE

| SYM | DATE | BY | DCR | REVISION |
|---|---|---|---|---|
| 1 | 08/13 2008 | DFY | | ADDED UNITS NOTE |

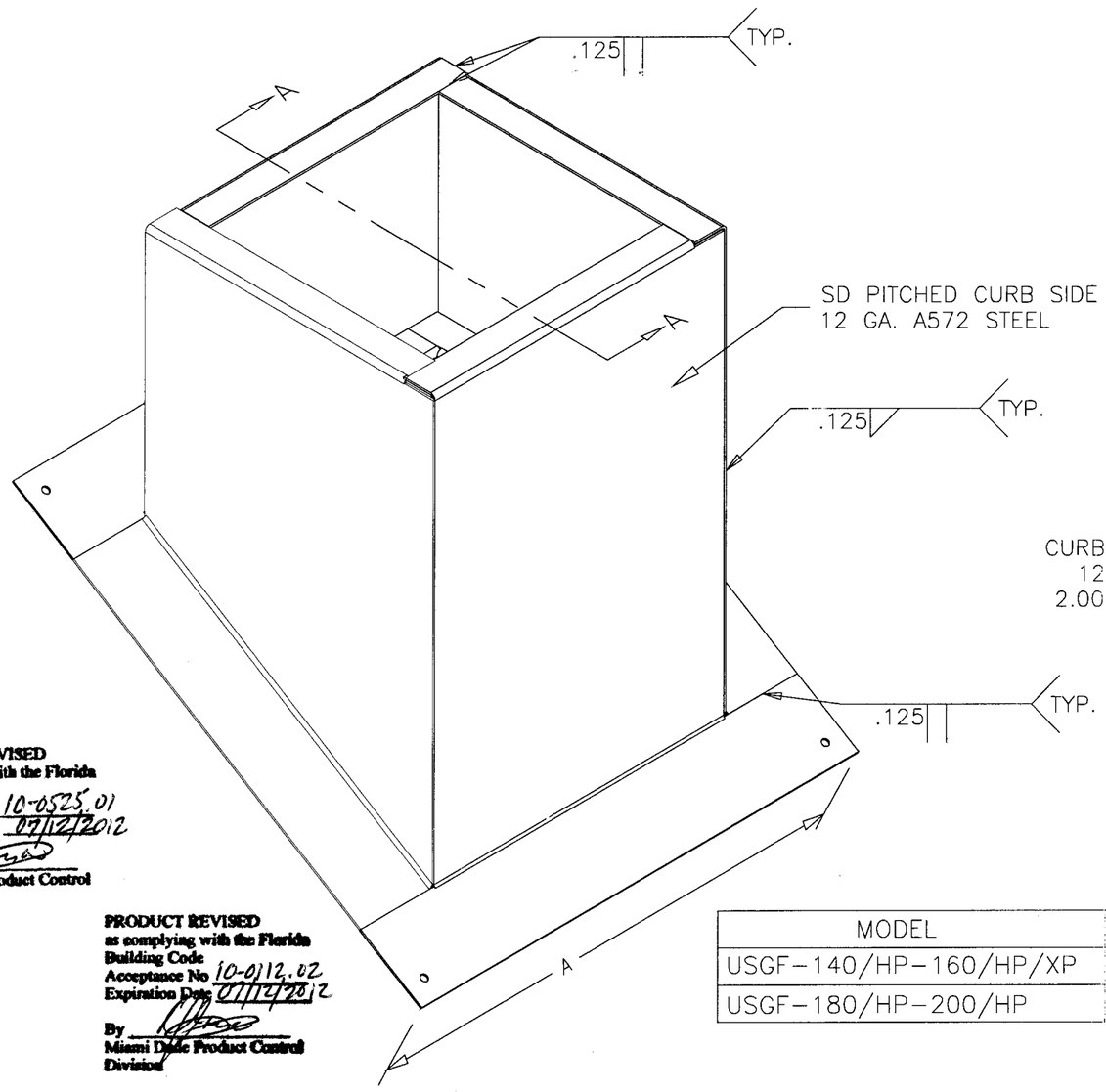


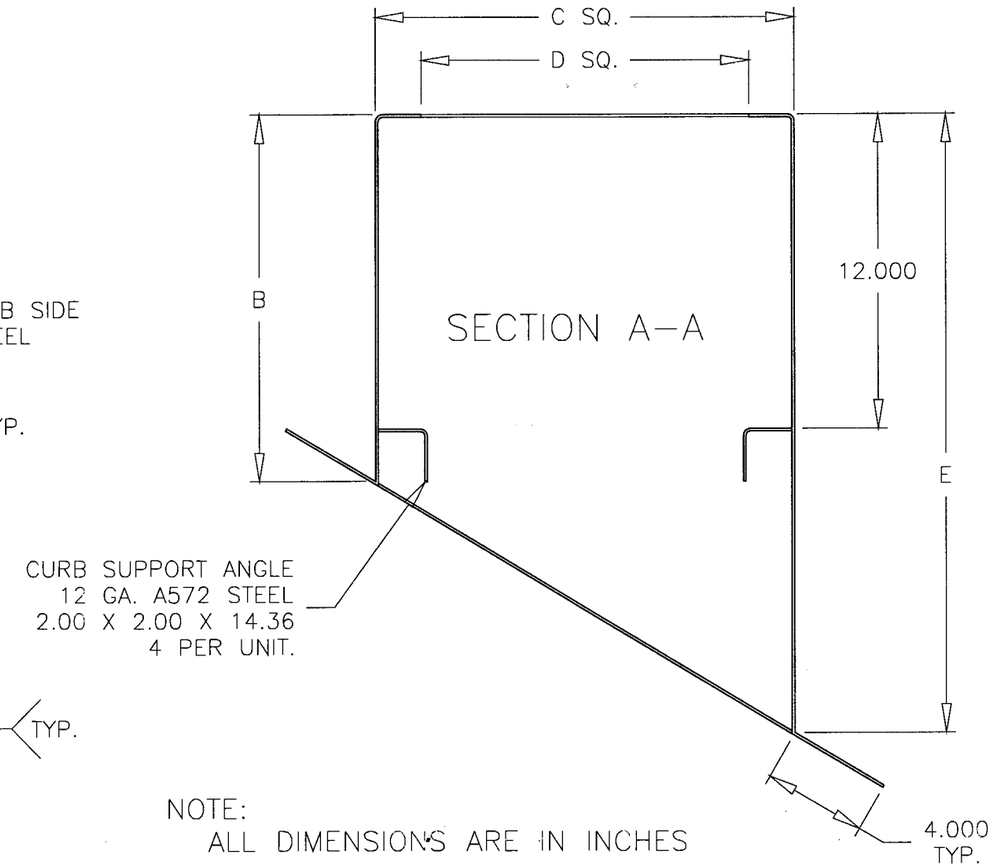


NOTE:
ALL DIMENSIONS ARE IN INCHES

| MODEL | CURB SIZE | A | B MIN. | B MAX. | C | D | E ACT. | E MAX. |
|---|---|---|---|---|---|---|---|---|
| USGF–140/HP–160/HP/XP | 26 | 32.75 | 14.00 | 18.00 | 24.75 | 21.25 | 22.25 | 24.00 |
| USGF–180/HP–200/HP | 30 | 36.75 | 14.00 | 18.00 | 28.75 | 25.25 | 23.58 | 24.00 |

PRODUCT REVISED
as complying with the Florida
Building Code
Acceptance No 10-0525.01
Expiration Date 07/12/2012
By
Miami/Dade Product Control
Division

PRODUCT REVISED
as complying with the Florida
Building Code
Acceptance No 10-0112.02
Expiration Date 07/12/2012
By
Miami Dade Product Control
Division

PRODUCT REVISED
as complying with the Florida
Building Code
Acceptance No 08-0519.01
Expiration Date 7-12-12
By
Miami Dade Product Control
Division

CURB NOTE:

Curb anchorage should be into minimum 2000 PSI concrete. Use 3/8" x 3" wedge anchors or equal, one each corner, each side at center of curb, and maximum 8 inches on center spacing along the side. Anchors shall be minimum 1 5/8" embedment and 1 3/4" edge distance. Or should be into minimum 12 ga (1/8") steel member. Fasteners shall be #12–14 self drilling scrwws or equal, 1 fastener each corner, 1 each side at center of unit and maximum on center spacing of 8" each side. Or shall be into minimum No.1/No.2 southern pine 2 x member (SG=0.55 or better). Fastners shall be #12 x 3" wood screws or equal. Fastenrers shall be installed one each corner, each side at centeer of unit, and at 6" maximum on center spacing along the side. Center fastener on supporting 2 x member with minimum 2" thread engagement and 2" end distance. Curbs must be anchored to roof framing members and not to the roofing system.

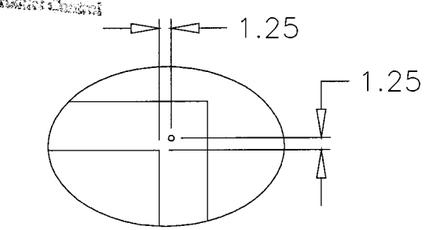


CURB CORNER
ANCHOR DETAIL

REV
REV. DATE
REV. 1

DRAWN BY YAKLOVICH
DATE 08/13/2008
SUPERSEDES
SCALE 1/6
SHEET NO. SHEET 2 OF 2

GREENHECK
P.O.BOX 410 SCHOFIELD, WISCONSIN 54476-0410

TITLE
SD PITCHED CURB

RICE ENGINEERING
105 School Creek Trail
Luxemburg, WI 54217
Phone 920.845.1042
Fax 920.845.1048
www.rice-inc.com

Florida Firm No. F-01000005061
Certificate of Authorization: #9090
L. David Rice
Registration No: 50923

SEP 1 1 2008

L. DAVID RICE

| SYM | DATE | BY | DCR | REVISION |
|---|---|---|---|---|
| 3 | 08/13 2008 | DFY | | ADDED UNITS NOTE |

ALL DIMENSIONS ARE IN INCHES

| ITEM | QUANTITY | DESCRIPTION | MATERIAL | DIMENSIONS |
|---|---|---|---|---|
| 1 | 1 | HOUSING ASSY. | CRS DS | 16 GA. X 22.75 X 34.20 |
| 2 | 1 | HOODBAND | CRS CS-B | 16 GA. X 25.00 X 19.00 |
| 3 | 1 | HOOD | CRS DS | 16 GA. X 25.20 X 3.00 |
| 4 | 1 | SUPPORT PAN | GALVANIZED G90 | 20 GA. X 25.20 X 1.19 |
| 5 | 10 | PAL NUT | SPRING STEEL | ¼-20 |
| 6 | 4 | SCREW | STAINLESS STEEL | ¼-20 X 5/8 |
| 7 | 24 | TREAD CUTTING SCREW | ANSI B18.6.4 | ¼-20 X 3/4 |
| 8 | 6 | RIVET, SEMI TUBULAR | 5052 ALUMINUM | ¼ X 5/16 |
| 9 | 6 | VERTICAL SUPPORT | GALVANIZED G90 | 16 GA. 12.94 X .89 X .59 |
| 10 | 6 | HOODBAND CLIP | GALVANIZED G90 | 16 GA. 2.44 X 1.25 X 1.13 |
| 11 | 6 | HORIZONTAL SUPPORT | GALVANIZED G90 | 16 GA. 5.72 X 1.03 X 1.50 |
| 12 | 1 | PLUG, 4" VITON SEAL | STEEL W. RUBBER SEAL | 4" Dia. |
| 13 | 1 | CLEAN OUT TUBE | CRS CS-B | 4.25 O.D. X 4.00 I.D. X 1.50 |
| 14 | 4 | CURB SUPPORT ANGLE | A572 STEEL | 12 GA. 2.00 X 2.00 X 26.61 FORMED ANGLE |
| 15 | 4 | SD CURB SIDE | A572 STEEL | 12 GA. 28.75 X 24.00 HIGH |
| 16 | 1 | HINGE FRAME | GALVANIZED G90 | 16 GA. 29.50 X 29.50 X 4.58 HIGH |
| 17 | 4 | HINGE BRACKET | 1100-H14ALUMINUM | .190 4.28 X 2.48 |
| 18 | 2 | CABLE ASSY. | .125 GALVANIZED 7 X 13 | ø.125 X 36.0 |
| 19 | 7 | NUT | GR2 IFI 100/107 | ¼-20 |
| 20 | 4 | WASHER, NYLON | NYLON | ½ X .257 X ⅛ |
| 21 | 2 | HEX BOLT | GR2 ANSI B18.2.1 | ¼-20 X 1 |
| 22 | 6 | WELD STUD | GR2 ANSI B18.2.1 | ¼-20 X ¾ |
| 23 | 4 | WASHER, FLAT | ANSI B18.2.1 | 1.25 X .25 X .063 |

PRODUCT REVISED
as complying with the Florida
Building Code
Acceptance No 10-0525.01
Expiration Date 07/12/2012
By
Miami Dade Product Control
Division

PRODUCT REVISED
as complying with the Florida
Building Code
Acceptance No 10-0112.02
Expiration Date 07/12/2012
By
Miami Dade Product Control
Division

PRODUCT REVISED
as complying with the Florida
Building Code
Acceptance No 08-0519.01
Expiration Date 7-12-12
By Gab Harris
Miami Dade Product Control
Division

| DESIGN LIMITS | |
|---|---|
| Max: Wind Velocity: | 150 mph (67 m/s) |
| Max: Desigh Load: | ±130 psf (6.2 Kpa) |
| Max: Overall Enclosure Dia.: | 35.45 in. (900 mm) |
| Max: Overall Unit Height W/Curb: | 69.00 in. (1499 mm) |
| Max: Overall Unit Height W/O Curb: | 35.00 in. (889 mm) |
| Max: Curb Cap Sq. Dim.: | 30.00 in. (762 mm) |
| Max: Roof Curb Sq. Dim.: | 28.75 in. (730 mm) |
| Max: Roof Curb Height: | 24.00 in. (610 mm) |
| Qualified Substrates | 3000 psi Concrete, ⅛" Steel |


RICE ENGINEERING
105 School Creek Trail
Luxemburg, WI 54217
Phone 920.845.1042
Fax 920.845.1048
www.rice-inc.com

Florida Firm No. F-01000005061
Certificate of Authorization: #9090
L. David Rice
Registration No: 50923

L. DAVID RICE


AUG 2 1 2008

REV
REV. DATE
REV. 3

DRAWN BY YAKLOVICH
DATE 08/13/2008
SUPERSEDES
SCALE 1/1
SHEET NO.
SHEET 1 OF 6

GREENHECK
P.O.BOX 410 SCHOFIELD, WISCONSIN 54476-0410

TITLE USGF-180/200/HP

| REVISION | DCR | BY | DATE | SYM |
|---|---|---|---|---|
| ADDED UNITS NOTE | | DFY | 08/13 2008 | 3 |

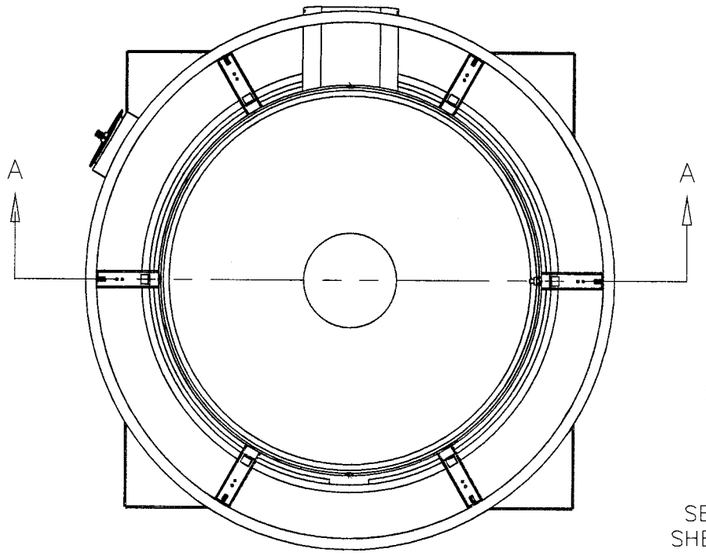


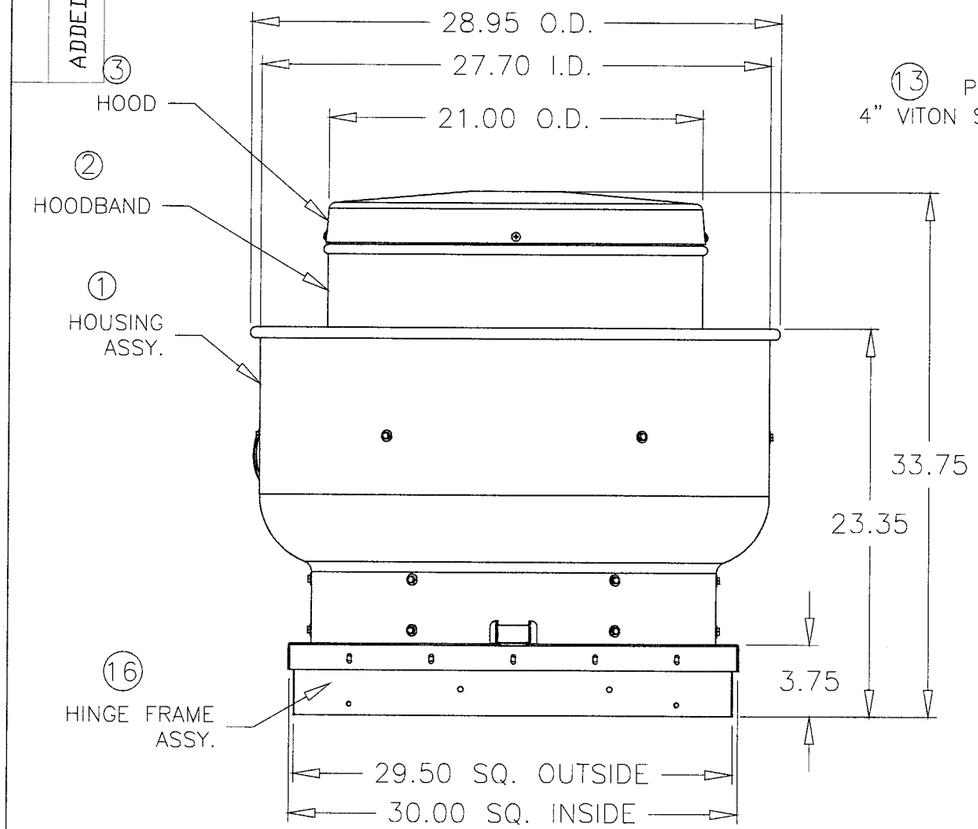


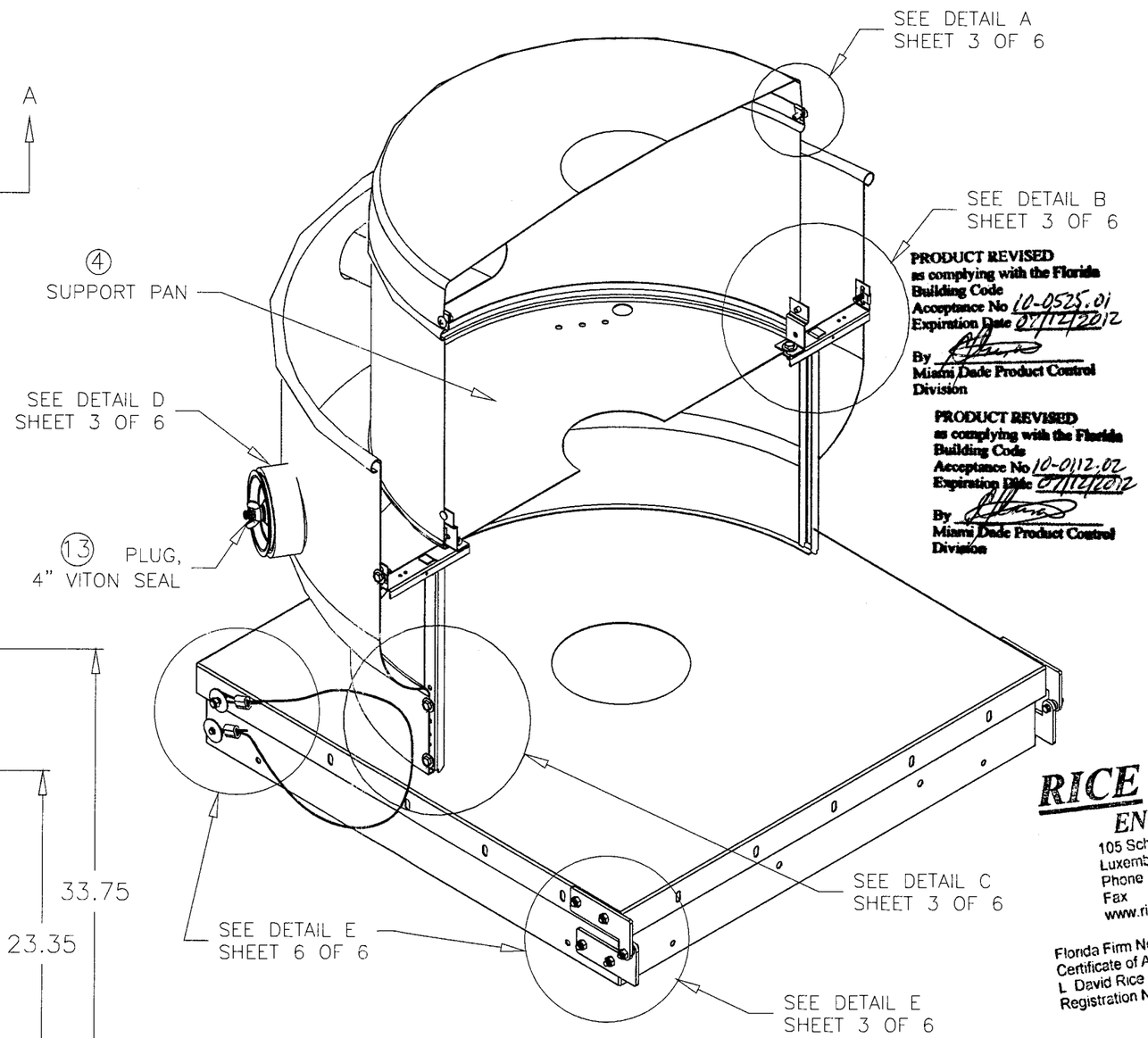


SECTION A–A

PRODUCT REVISED
as complying with the Florida Building Code
Acceptance No 10-0525.01
Expiration Date 07/12/2012
By
Miami Dade Product Control Division

PRODUCT REVISED
as complying with the Florida Building Code
Acceptance No 10-0112.02
Expiration Date 07/12/2012
By
Miami Dade Product Control Division

PRODUCT REVISED
as complying with the Florida Building Code
Acceptance No 08-0519.01
Expiration Date 7-12-12
By Fitz Harris
Miami Dade Product Control Division

NOTE:
ALL DIMENSIONS ARE IN INCHES


RICE ENGINEERING
105 School Creek Trail
Luxemburg, WI 54217
Phone 920.845 1042
Fax 920.845 1048
www.rice-inc.com

Florida Firm No F-01000005061
Certificate of Authorization: #909Q
L David Rice
Registration No: 50923

L. DAVID RICE


REV
REV. DATE
REV. 3

DRAWN BY YAKLOVICH
DATE 08/13/2008
SUPERSEDES
SCALE 1/10
SHEET NO. SHEET 2 OF 6

GREENHECK
P.O.BOX 410 SCHOFIELD, WISCONSIN 54476-0410

TITLE USGF-180/200/HP

AUG 21 2008

| REVISION | DCR | BY | DATE | SYM |
|---|---|---|---|---|
| ADDED UNITS NOTE | | DFY | 08/13 2008 | 3 |

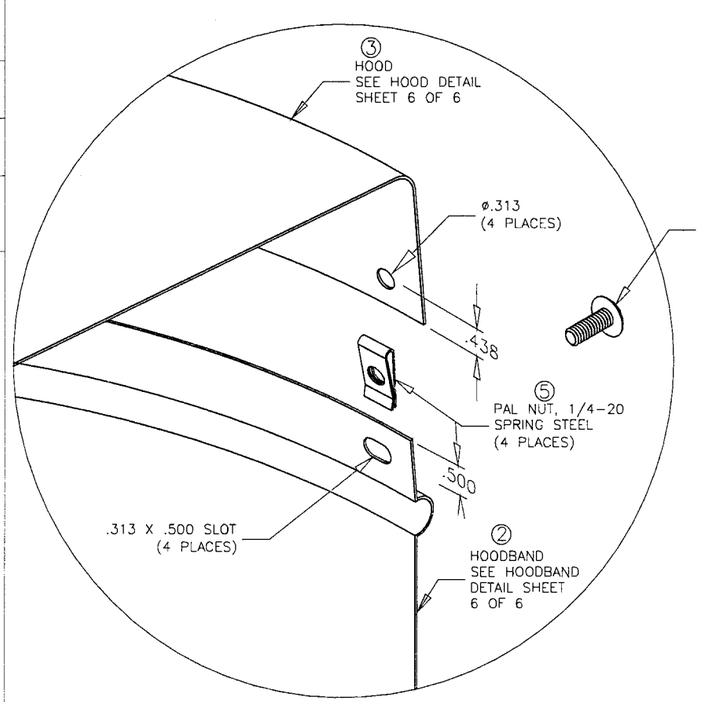


DETAIL A

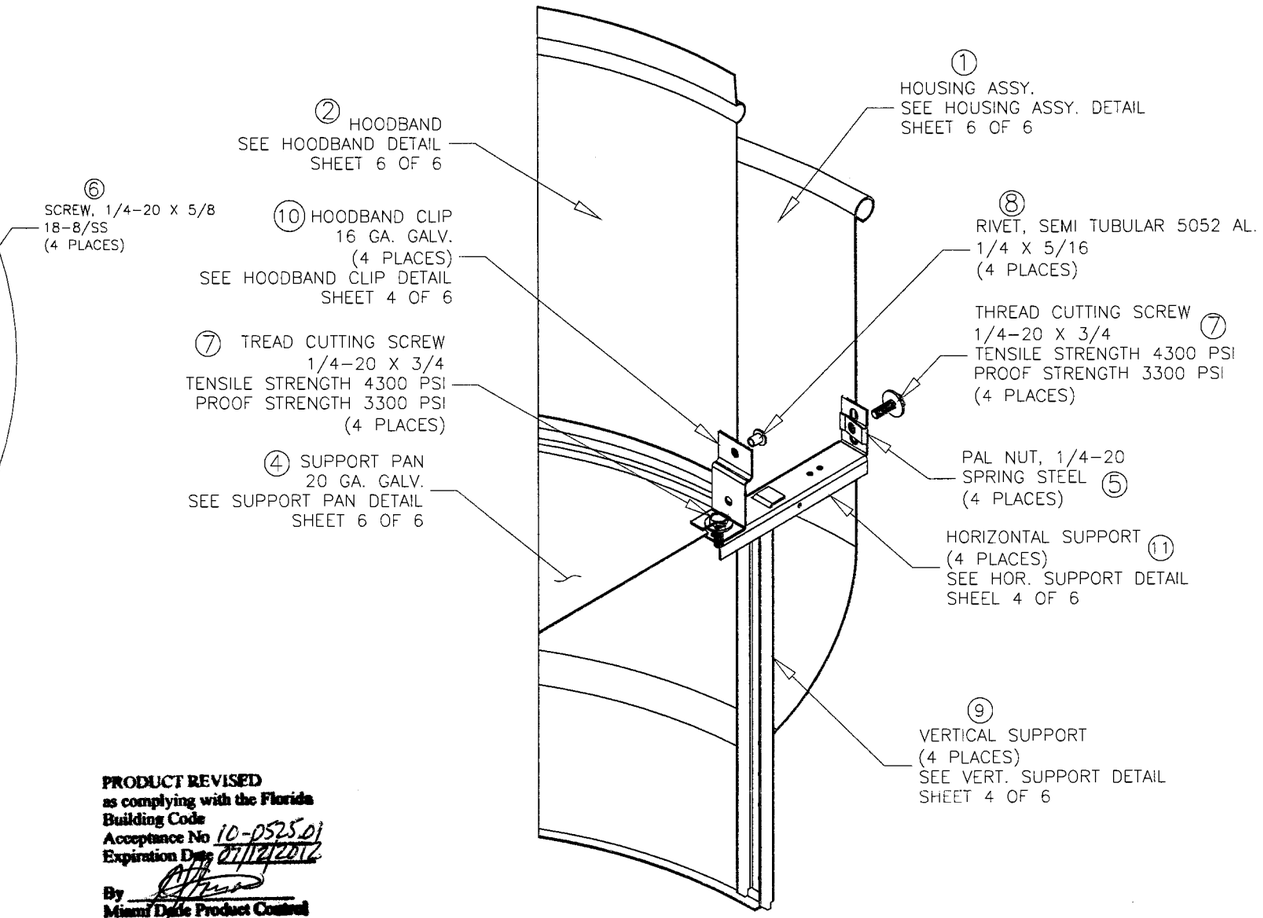


DETAIL B

**PRODUCT REVISED**
**as complying with the Florida**
**Building Code**
**Acceptance No** 10-0525.01
**Expiration Date** 07/12/2012
**By** _____
**Miami Dade Product Control**
**Division**

**PRODUCT REVISED**
**as complying with the Florida**
**Building Code**
**Acceptance No** 10-0112.02
**Expiration Date** 07/12/2012
**By** _____
**Miami Dade Product Control**
**Division**

PRODUCT REVISED
as complying with the Florida
Building Code
Acceptance No 08-0519.01
Expiration Date 7-12-12
By _____
Miami Dade Product Control
Division

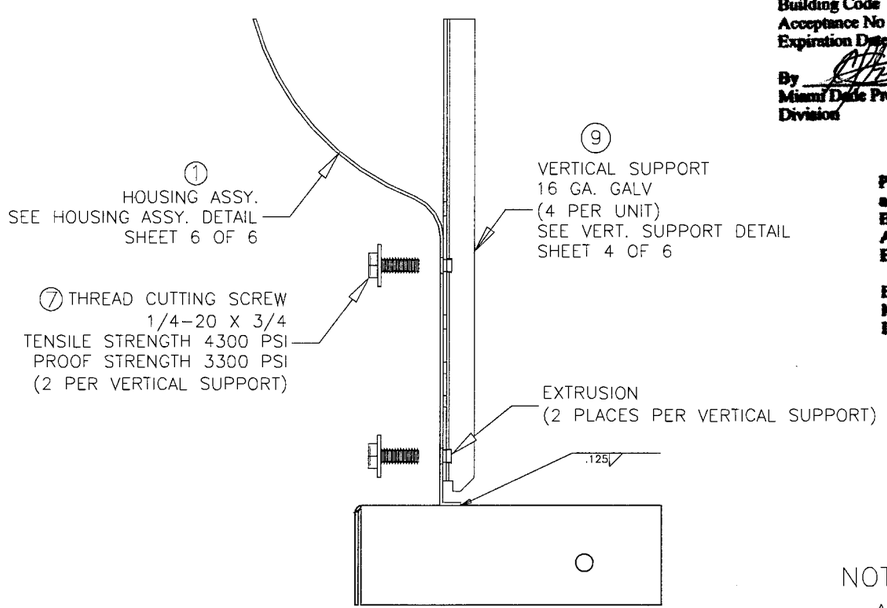


DETAIL C

NOTE:
ALL DIMENSIONS ARE IN INCHES

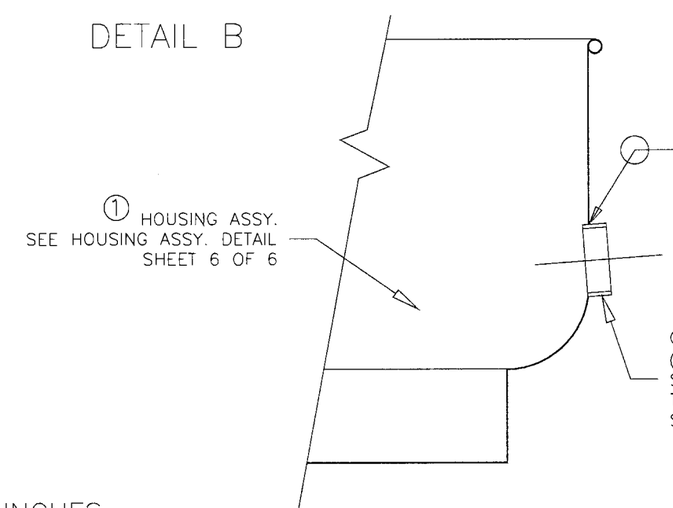


DETAIL D


RICE ENGINEERING
105 School Creek Trail
Luxemburg, WI 54217
Phone 920.845 1042
Fax 920.845 1048
www.rice-inc.com
Florida Firm No. F-01000005061
Certificate of Authorization #9090
L David Rice
Registration No. 50923
L. DAVID RICE


| REV | REV. DATE | REV. 3 |
|---|---|---|
| DRAWN BY YAKLOVICH | DATE: 08/13/2008 | SUPERSEDES |
| SCALE 1/1 | SHEET NO. | SHEET 3 OF 6 |

GREENHECK
P.O.BOX 410 SCHOFIELD, WISCONSIN 54476-0410

TITLE
USGF-180/200/HP

AUG 2 1 2008

| SYM | DATE | BY | DCR | REVISION |
|---|---|---|---|---|
| 3 | 08/13 2008 | DFY | | ADDED UNITS NOTE |

NOTE:
ALL DIMENSIONS ARE IN INCHES

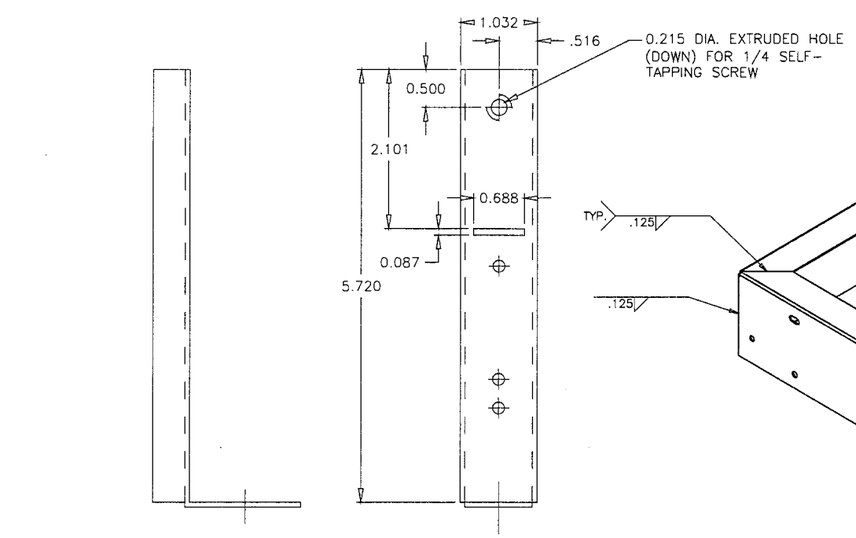


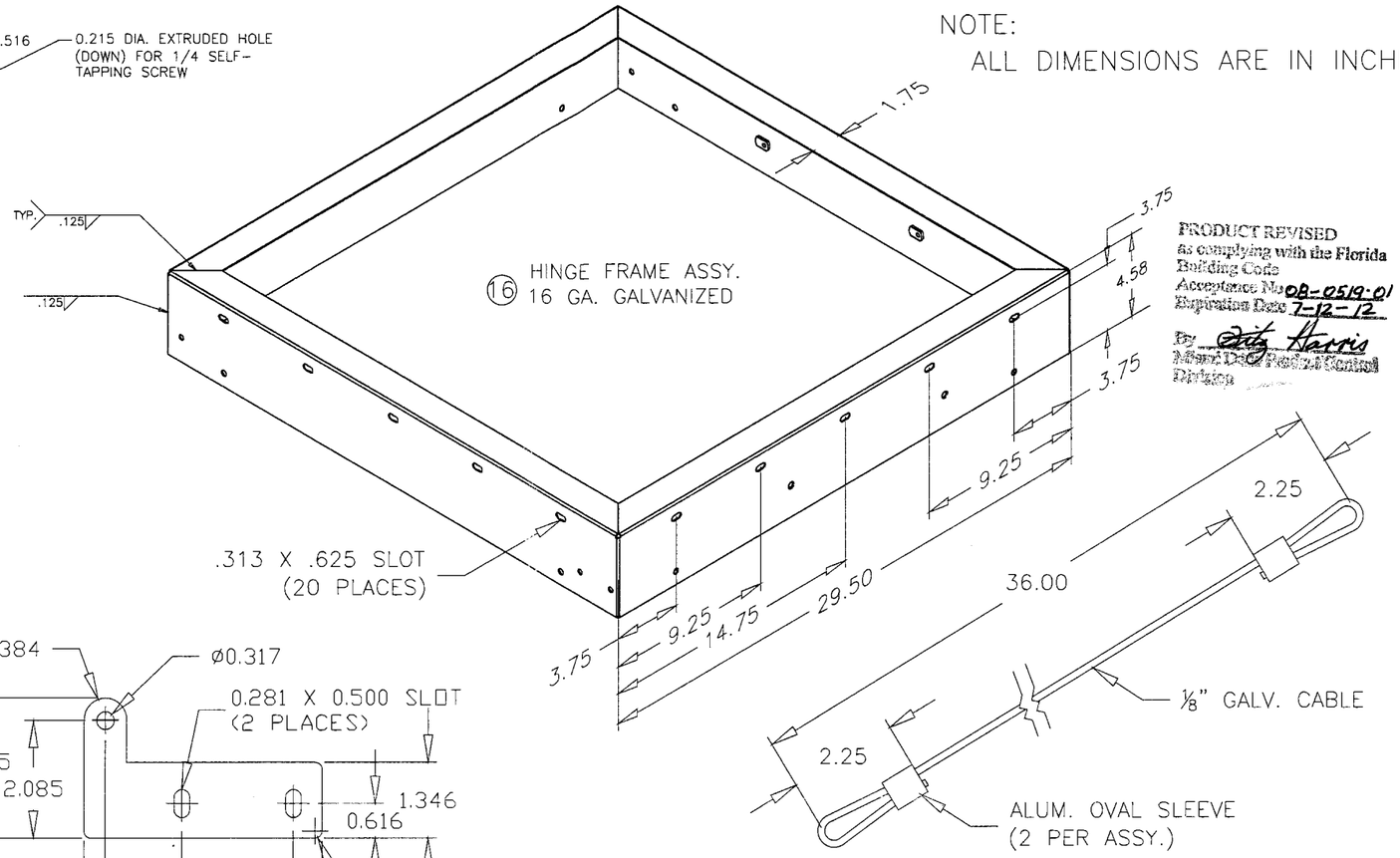


(16) HINGE FRAME ASSY.
16 GA. GALVANIZED

(18) CABLE ASSY.
⅛" GALVANIZED CABLE

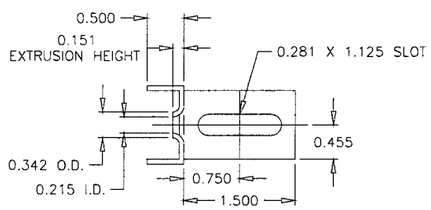


(11) HOR. SUPPORT DETAIL
16 GA. GALVANIZED

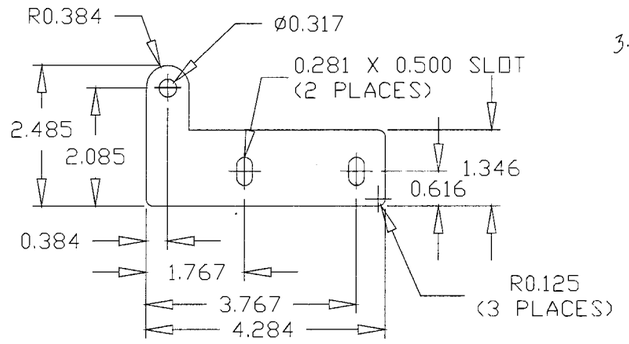


(17) HINGE BRACKET DETAIL
.190 ALUM.

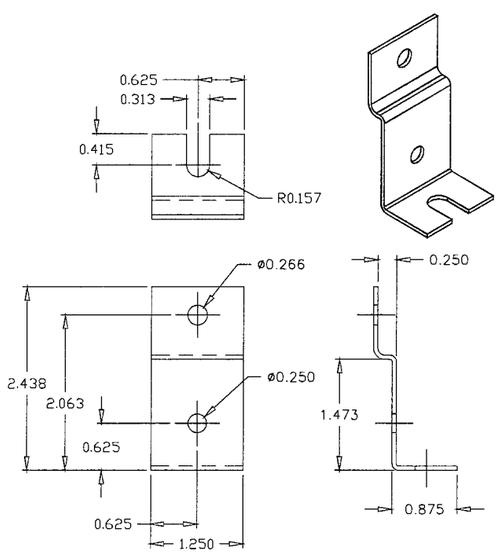


(10) HOODBAND CLIP DETAIL
16 GA. GALVANIZED

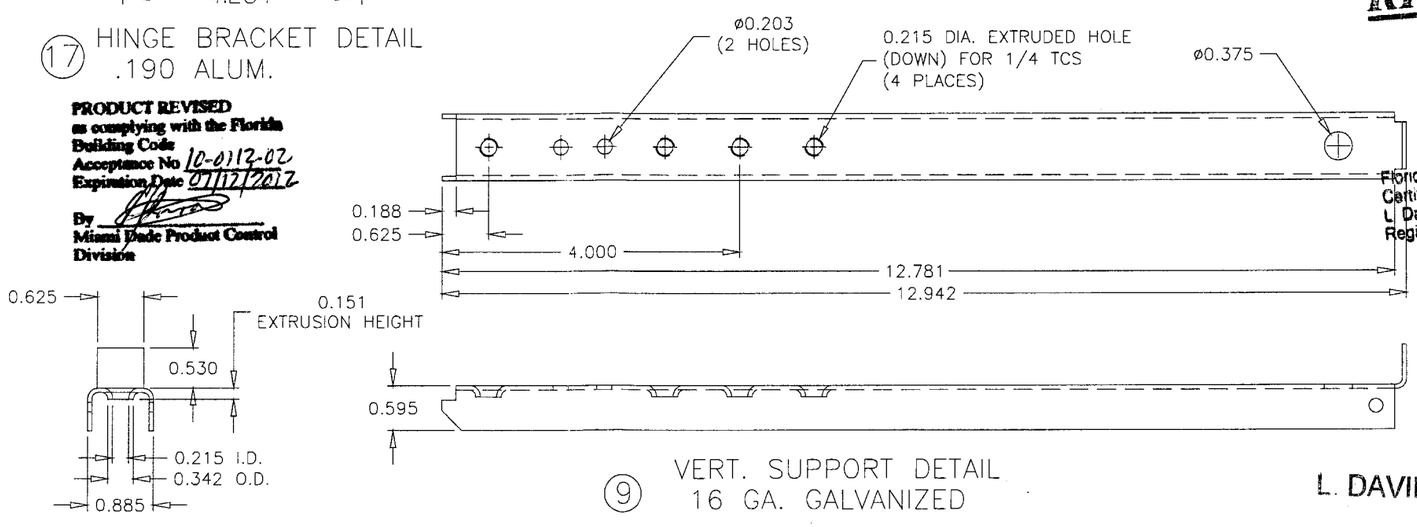


(9) VERT. SUPPORT DETAIL
16 GA. GALVANIZED

PRODUCT REVISED
as complying with the Florida Building Code
Acceptance No 08-0519.01
Expiration Date 7-12-12
By Miami Dade Product Control Division

PRODUCT REVISED
as complying with the Florida Building Code
Acceptance No 10-0112.02
Expiration Date 07/12/2012
By Miami Dade Product Control Division

PRODUCT REVISED
as complying with the Florida Building Code
Acceptance No 10-0525.01
Expiration Date 07/12/2012
By Miami Dade Product Control Division

RICE ENGINEERING
105 School Creek Trail
Luxemburg, WI 54217
Phone 920.845 1042
Fax 920.845 1048
www.rice-inc.com

Florida Firm No. F-01000005061
Certificate of Authorization: #9090
L. David Rice
Registration No: 50923

L. DAVID RICE

| REV | REV. DATE |
|---|---|
| | |

REV. 3

DRAWN BY YAKLOVICH
DATE 08/13/2008
SUPERSEDES
SCALE 1/1
SHEET NO.
SHEET 4 OF 6

GREENHECK
P.O.BOX 410 SCHOFIELD, WISCONSIN 54476-0410

TITLE USGF-180/200/HP

AUG 2 1 2008

| SYM | DATE | BY | DCR | REVISION |
|---|---|---|---|---|
| 3 | 08/13 2008 | DFY | | ADDED UNITS NOTE |

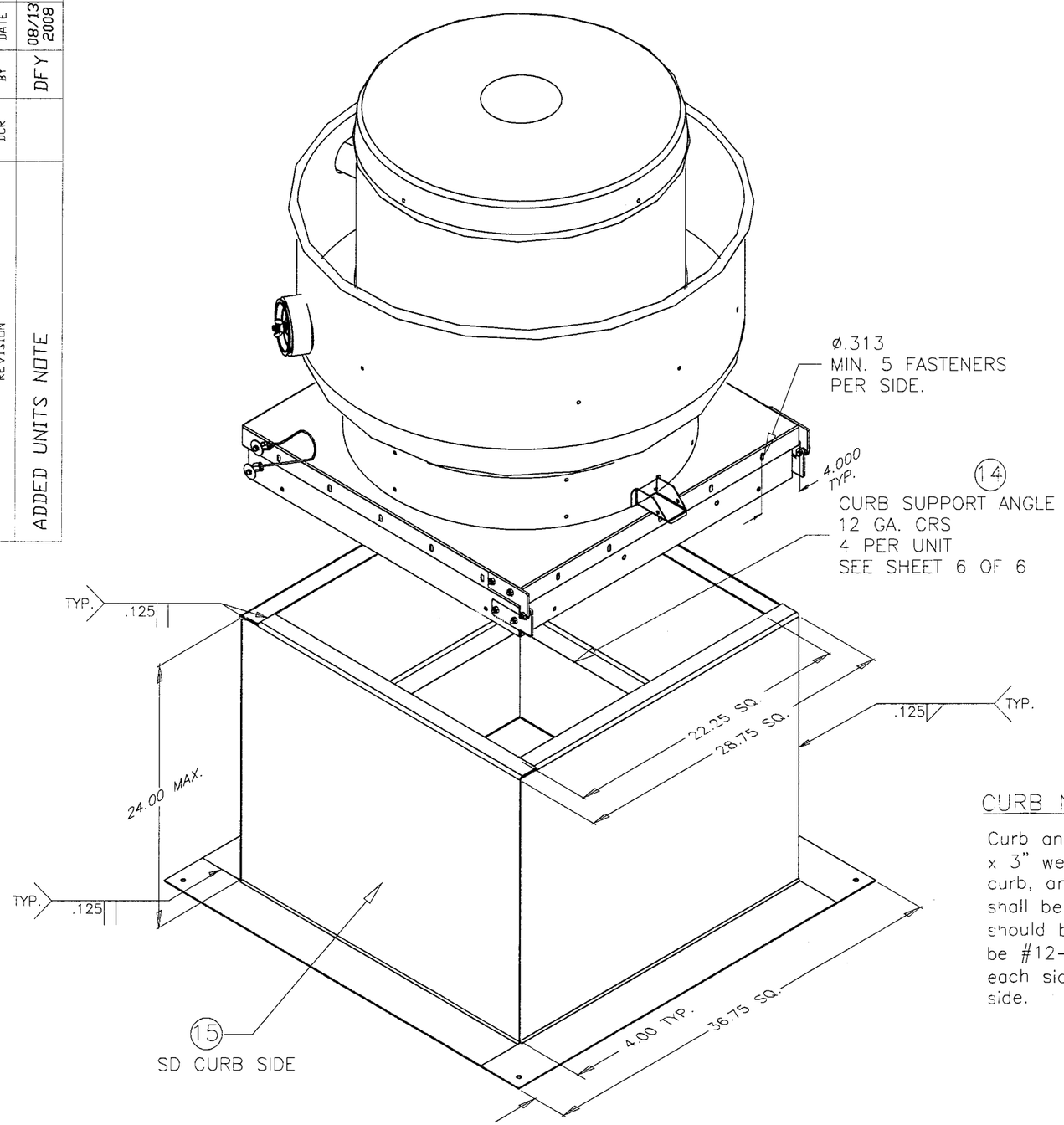


NOTE:
ALL DIMENSIONS ARE IN INCHES

PRODUCT REVISED
as complying with the Florida Building Code
Acceptance No 10-0112.02
Expiration Date 07/12/2012
By
Miami Dade Product Control Division

PRODUCT REVISED
as complying with the Florida Building Code
Acceptance No 08-0519.01
Expiration Date 7-12-12
By
Miami Dade Product Control Division

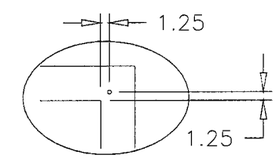


CURB CORNER
ANCHOR DETAIL

PRODUCT REVISED
as complying with the Florida Building Code
Acceptance No 10-0525.01
Expiration Date 07/12/2012
By
Miami Dade Product Control Division

RICE ENGINEERING
105 School Creek Trail
Luxemburg WI 54217
Phone 920.845 1042
Fax 920.845 1048
www.rice-inc.com
Florida Firm No F-01000005061
Certificate of Authorization: #9090
L. David Rice
Registration No: 50923

CURB NOTE:

Curb anchorage should be into minimum 3000 PSI concrete. Use 3/8" x 3" wedge anchors or equal, one each corner, each side at center of curb, and maximum 8 inches on center spacing along the side. Anchors shall be minimum 1 5/8" embedment and 1 3/4" edge distance. Or should be into minimum 12 ga (1/8") steel member. Fasteners shall be #12-14 self drilling screws or equal, 1 fastener each corner, each side at center of unit and maximum on center spacing of 8" each side.

L. DAVID RICE

AUG 2 1 2008

| | |
|---|---|
| REV | REV. DATE |
| DRAWN BY | YAKLOVICH |
| DATE | 08/13/2008 |
| SUPERSEDES | |
| SCALE | 1/1 |
| SHEET NO. | SHEET 5 OF 6 |
| REV. | 3 |

GREENHECK
P.O.BOX 410 SCHOFIELD, WISCONSIN 54476-0410

TITLE
USGF-180/200/HP

| SYM | DATE | BY | DCR | REVISION |
|---|---|---|---|---|
| 3 | 08/13 2008 | DFY | | ADDED UNITS NOTE |

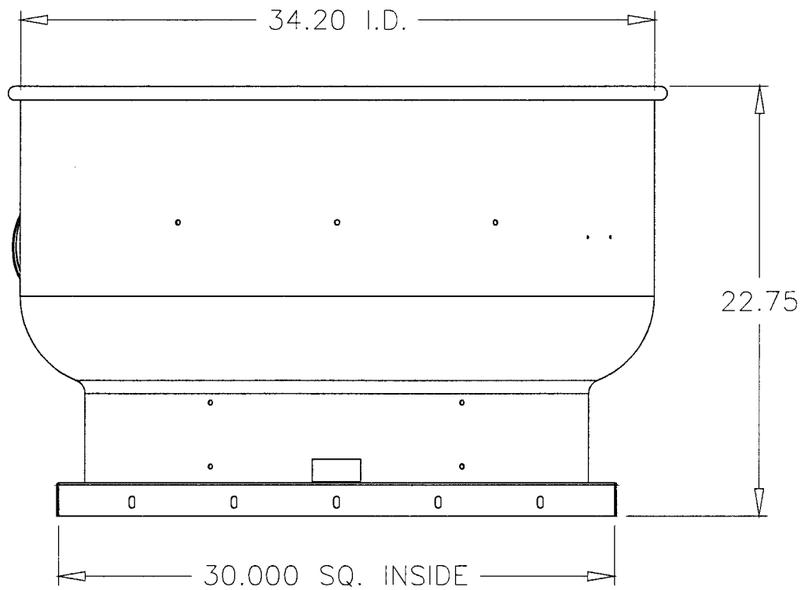


① HOUSING ASSY. CRS

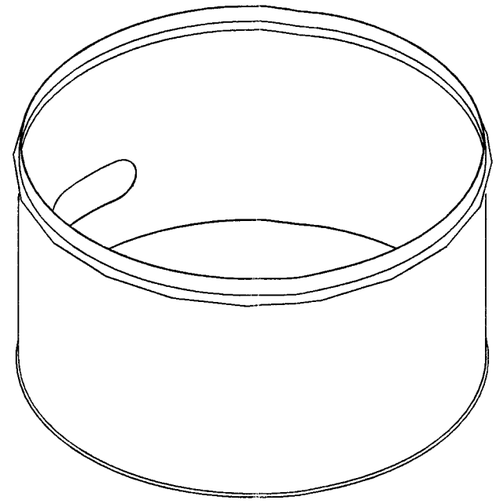

② HOODBAND 16 GA.CRS
ø25.0 I.D. 19" TALL

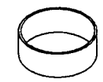

⑬ CLEANOUT TUBE
4.25 O.D. X 4.00 I.D. X 1.50

⑭ CURB SUPPORT ANGLE 12 GA. CRS
2.00 X 2.00 X 26.61

NOTE:
ALL DIMENSIONS ARE IN INCHES

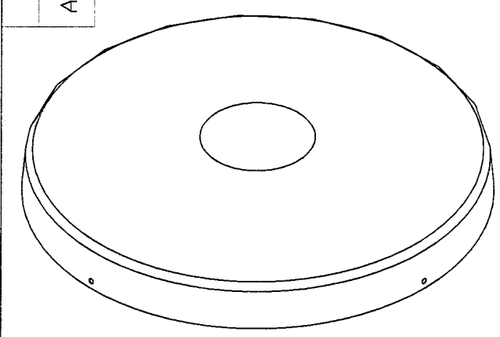

③ HOOD 16 GA.CRS
ø25.2 O.D. 3.0" TALL

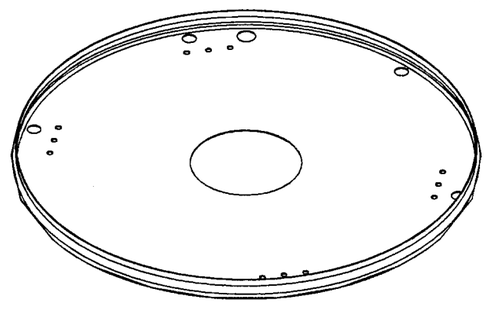

④ SUPPORT PAN 20 GA.GALVANIZED
ø25.2 O.D. 1.2" TALL

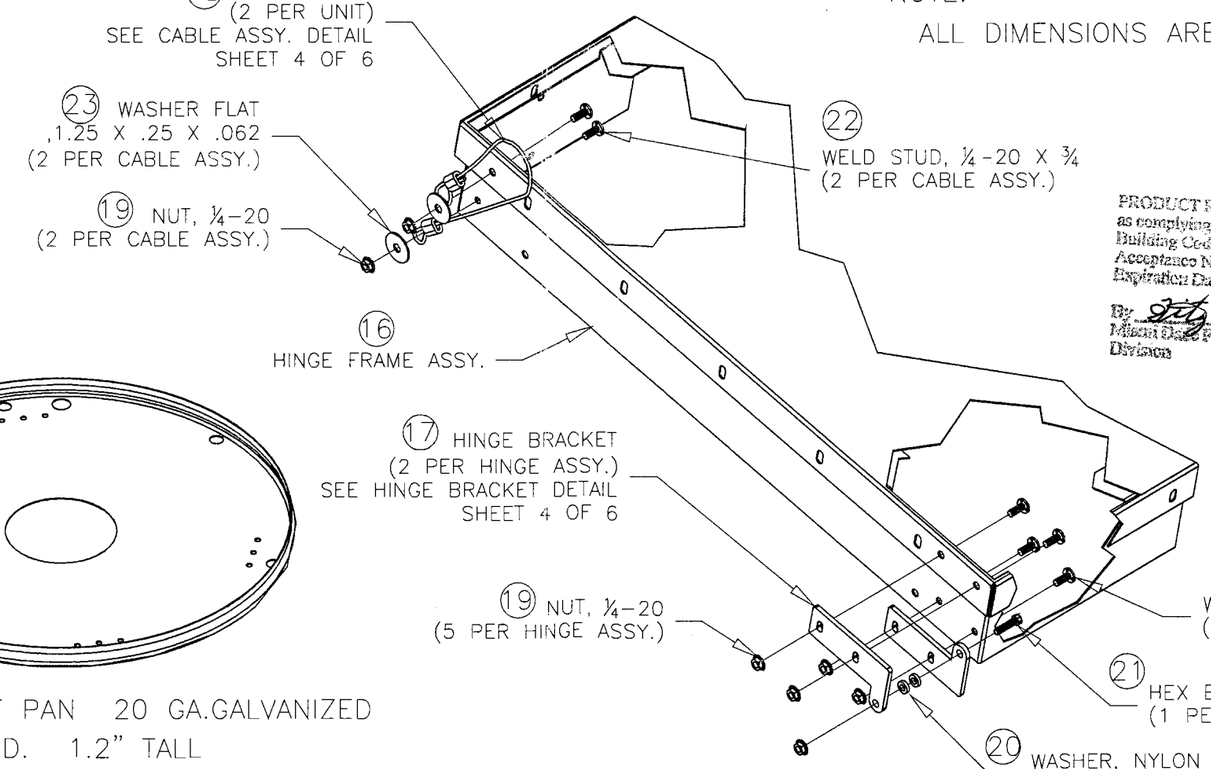


DETAIL E

PRODUCT REVISED
as complying with the Florida
Building Code
Acceptance No 10-0112.02
Expiration Date 07/12/2012
By
Miami Dade Product Control
Division

PRODUCT REVISED
as complying with the Florida
Building Code
Acceptance No 08-0519.01
Expiration Date 7-12-12
By Harris
Miami Dade Product Control
Division

PRODUCT REVISED
as complying with the Florida
Building Code
Acceptance No 10-0525.01
Expiration Date 07/12/2012
By
Miami Dade Product Control
Division

RICE
ENGINEERING
105 School Creek Trail
Luxemburg, WI 54217
Phone 920.845 1042
Fax 920.845 1048
www.rice-inc.com

Florida Firm No F-01000005061
Certificate of Authorization: #9090
L David Rice
Registration No: 50923

L. DAVID RICE

| REV | REV. DATE |
|---|---|
| REV. 3 | |

DRAWN BY YAKLOVICH
DATE 08/13/2008
SUPERSEDES
SCALE 1/8
SHEET NO. SHEET 6 OF 6

GREENHECK
P.O.BOX 410 SCHOFIELD, WISCONSIN 54476-0410

TITLE USGF-180/200/HP

AUG 2 1 2008