MIAMI-DADE COUNTY

BUILDING CODE COMPLIANCE OFFICE (BCCO)
PRODUCT CONTROL DIVISION

MIAMI-DADE COUNTY, FLORIDA
METRO-DADE FLAGLER BUILDING
140 WEST FLAGLER STREET, SUITE 1603
MIAMI, FLORIDA 33130-1563
(305) 375-2901 FAX (305) 375-2908

NOTICE OF ACCEPTANCE (NOA)

Sentrigard Metal Roofing Systems Association, Corp.
4625 Alexander Drive, Suite 135
Alpharetta, GA. 30022

SCOPE:
This NOA is being issued under the applicable rules and regulations governing the use of construction materials. The documentation submitted has been reviewed by Miami-Dade County Product Control Division and accepted by the Board of Rules and Appeals (BORA) to be used in Miami Dade County and other areas where allowed by the Authority Having Jurisdiction (AHJ).

This NOA shall not be valid after the expiration date stated below. The Miami-Dade County Product Control Division (In Miami Dade County) and/or the AHJ (in areas other than Miami Dade County) reserve the right to have this product or material tested for quality assurance purposes. If this product or material fails to perform in the accepted manner, the manufacturer will incur the expense of such testing and the AHJ may immediately revoke, modify, or suspend the use of such product or material within their jurisdiction. BORA reserves the right to revoke this acceptance, if it is determined by Miami-Dade County Product Control Division that this product or material fails to meet the requirements of the applicable building code.

This product is approved as described herein, and has been designed to comply with the Florida Building Code including the High Velocity Hurricane Zone of the Florida Building Code.

DESCRIPTION: Sentrigard ML 100 H

LABELING: Each unit shall bear a permanent label with the manufacturer's name or logo, city, state and following statement: "Miami-Dade County Product Control Approved", unless otherwise noted herein.

RENEWAL of this NOA shall be considered after a renewal application has been filed and there has been no change in the applicable building code negatively affecting the performance of this product.

TERMINATION of this NOA will occur after the expiration date or if there has been a revision or change in the materials, use, and/or manufacture of the product or process. Misuse of this NOA as an endorsement of any product, for sales, advertising or any other purposes shall automatically terminate this NOA. Failure to comply with any section of this NOA shall be cause for termination and removal of NOA.

ADVERTISEMENT: The NOA number preceded by the words Miami-Dade County, Florida, and followed by the expiration date may be displayed in advertising literature. If any portion of the NOA is displayed, then it shall be done in its entirety.

INSPECTION: A copy of this entire NOA shall be provided to the user by the manufacturer or its distributors and shall be available for inspection at the job site at the request of the Building Official.

This NOA consists of pages 1 through 7.
The submitted documentation was reviewed by Alex Tigera.

MIAMI-DADE COUNTY APPROVED

ROOFING SYSTEM APPROVAL:

Category:	Roofing
Sub-Category:	Non-Structural Metal Panels
Material:	Steel
Deck Type:	Wood
Maximum Design Pressure	**-146 psf**

TRADE NAMES OF PRODUCTS MANUFACTURED OR LABELED BY APPLICANT:

Product	Dimensions	Test Specifications	Product Description
ML 100 H	Length: various Height: 1" Width: 16-5/8" Thickness = 24ga (0.024")	TAS 110	Corrosion resistant, steel, coated mechanical-lock panel.

TRADE NAMES OF PRODUCTS MANUFACTURED BY OTHERS:

Product	Dimensions	Test Specifications	Product Description
DMP 1 ML Fixed EZ Seam Clip	Length: 2" Height: 1-1/8" Width: 1-1/4" Thickness 24 ga	TAS 125	One-Piece, Stainless Steel 24 gauge fixed clip.

EVIDENCE SUBMITTED:

Test Agency	Test Identifier	Test Name/Report	Date
Farabaugh Engineering and Testing Inc.	T231-07A	TAS 100	07/13/07
Force Engineering & Testing, Inc.	261-0464T-07A-C	TAS 125	007/11/07
Valspar Corporation		ASTM G23	03/16/05
Valspar Corporation		ASTM B 117	08/12/98

APPROVED ASSEMBLIES:

System:	ML 100 H 24ga Steel 16-5/8" wide panel
Deck Type:	Wood, Non-insulated
Deck Description:	New Construction $^{19}/_{32}$" or greater plywood or wood plank.
Slope Range:	2": 12" or greater
Maximum Uplift Pressure:	**See Table A below**

Deck Attachment:	In accordance with applicable Building Code, but in no case shall it be less than 8d annular ring shank nails spaced 6" o.c. In reroofing, where the deck is less than $^{19}/_{32}$" thick (Minimum $^{15}/_{32}$") The above attachment method must be in addition to existing attachment.
Underlayment:	Minimum underlayment shall be an ASTM D 226 Type II installed with a minimum 4" side-lap and 6" end-laps. Underlayment shall be fastened with corrosion resistant tin-caps and 12 gauge 1 ¼" annular ring-shank nails, spaced 6" o.c. at all laps and two staggered rows 12" o.c. in the field of the roll. Or, any approved underlayment having a current NOA. Additionally, install an 18" wide strip of W.R. Grace Ice and Water Shield along the entire eave and rake on top of the ASTM D 226 Type II underlayment.
Fire Barrier Board:	Any approved fire barrier having a current NOA, or for class A or B fire rating, install minimum ¼" thick Georgia Pacific "Dens Deck" (with current NOA) or minimum 4mm thick of Tritex, RockRoof (with current NOA) or $^{5}/_{8}$" water resistant type X gypsum sheathing with treated core and facer.
Valleys:	Valley construction shall be in compliance with Roofing Application Standard RAS 133 and with the current published installation instructions and details in Sentrigard Metal Roofing Systems Association, Inc.'s Installation Manual. Additionally, install a full sheet of W.R. Grace Ice and Water Shield underlayment, centered on the valley, on top of the ASTM D 226 Type II underlayment.

Metal Panels and Accessories:

Install the "ML 100 H 24ga Steel Panel" including flashing penetrations, valleys, end laps and accessories in compliance "Sentrigard Metal Roofing Systems Association, Inc.'s" current, published installation instructions and in compliance with the minimum requirements detailed in Roofing Application Standard RAS 133.

Panels shall be secured along the male rib with approved clips and two (2) corrosion resistant #12-11 Type A fasteners of sufficient length to penetrate through the sheathing a minimum of $^{3}/_{16}$". The panel clips were placed at a spacing listed in Table A below. The adjacent panel is placed over the secured panel/clip assembly and seamed with a double lock (180°) seam.

TABLE A
MAXIMUM DESIGN PRESSURES

Roof Areas	Field	Perimeter and Corner[1]
Maximum Design Pressures	-71 psf	-146 psf
Maximum Clip Spacing	24" o.c.	6" o.c.

1. Extrapolation shall not be allowed

LIMITATIONS

1 The maximum designed pressure listed herein shall be applicable to all roof pressure zones (i.e. field, perimeters, and corners). Neither rational analysis, nor extrapolation shall be permitted for enhanced fastening at enhanced pressure zones (i.e. perimeters, extended corners and corners).

2. Panels may be rolls formed in continuous lengths from eave to ridge. Maximum lengths shall be as described in Roofing Application Standard RAS 133

3. All panels shall be permanently labeled with the manufacturer's name and/or logo, and the following statement: "Miami-Dade County Product Control Approved" **or** with the Miami-Dade County Product Control Seal as seen below. All clips shall be permanently labeled with the manufacturer's name and/or logo, and/or model.

MIAMI-DADE COUNTY
APPROVED

4. Fire classification is not part of this acceptance; refer to a current Approved Roofing Materials Directory for fire ratings of this product.

5. All products listed herein shall have a quality assurance audit in accordance with the Florida Building Code and Rule 9B-72 of the Florida Administrative Code.

6. Panels may be jobsite roll formed with machine model **#Q98631039A** from Sentrigard Metal Roofing Systems Association, Inc..

PROFILE DRAWINGS

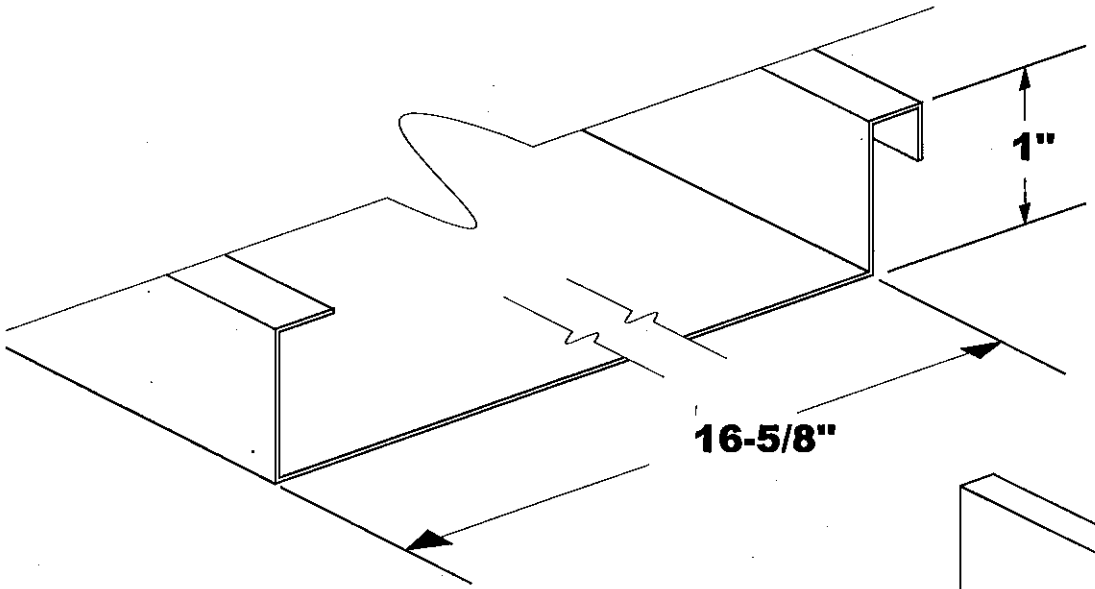

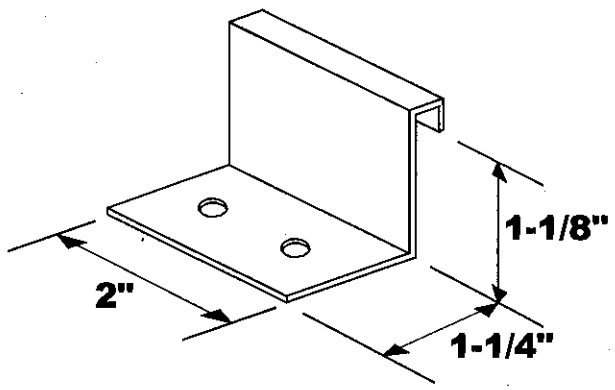

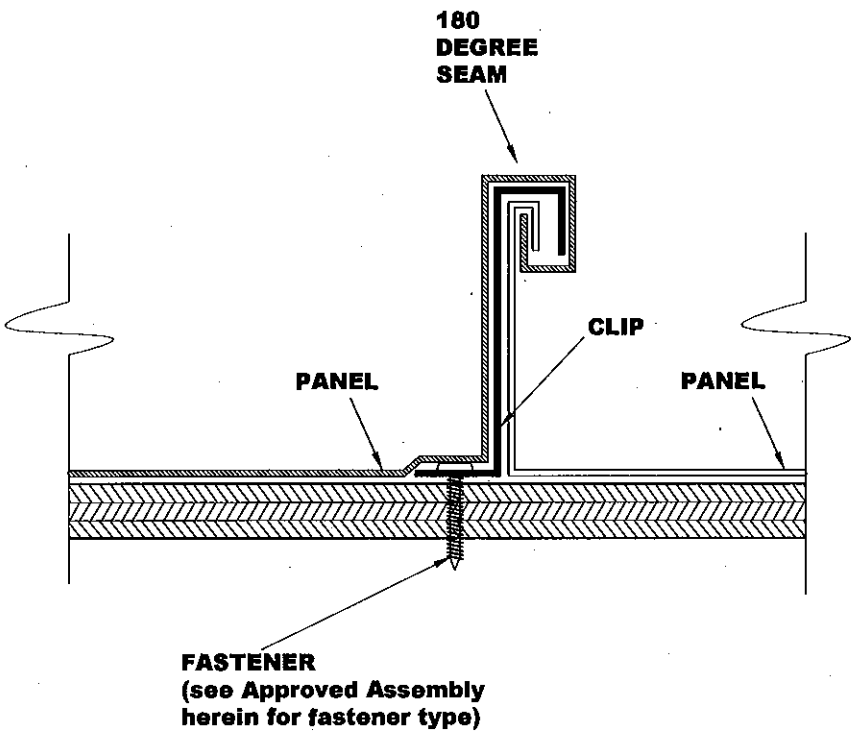

END OF THIS ACCEPTANCE

GREEN SUSTAINABLE ATTRIBUTES (GSA)

SCOPE: This document is solely for the purpose of verification of Sustainable Attributes of construction materials. The documentation submitted has been reviewed by Miami-Dade County Product Control Division.

G.1 - SOLAR REFLECTANCE AND THERMAL EMMITANCE

Metal Panel Color	Initial Reflectance	Aged Reflectance	Initial Emmitance	Aged Emmitance	Solar Reflectance Index (SRI)
1. Almond (T23)	0.61	0.60	0.87		73
2. Apothecary Blue (V32)	0.26	0.26	0.85		24
3. Banner Red (V93)	0.42	0.41	0.84		45
4. Bone White (V03)	0.65	0.65	0.86		78
5. Bright Copper (V25)	0.49	0.47	0.85		55
6. Bright Silver (V26)	0.60	0.60	0.77		68
7. Burgundy (V24)	0.25	0.23	0.85		23
8. Charcoal Gray (L01)	0.29	0.25	0.89		30
9. Classic Green (L02)	0.31	0.25	0.85		31
10. Colonial Red (L03)	0.35	0.23	0.85		36
11. Dark Bronze (L04)	0.28	0.25	0.89		29
12. Hartford Green (L05)	0.30	0.25	0.85		30
13. Hemlock Green (L06)	0.37	0.32	0.85		39
14. Mansard Brown (L07)	0.29	0.25	0.86		29
15. Matte Black (L08)	0.29	0.25	0.86		29
16. Medium Bronze (L09)	0.30	0.25	0.86		30
17. Musket Gray (L10)	0.33	0.31	0.85		34
18. Old Town Gray (L18)	0.40	0.35	0.86		43
19. Patina Green (V14)	0.29	0.28	0.87		29
20. Pewter (L11)	0.36	0.35	0.85		38
21. Regal Blue (L12)	0.28	0.25	0.89		29
22. Regal White (V38)	0.68	0.67	0.86		82
23. Sandstone (V17)	0.54	0.53	0.86		63
24. Sierra Tan (V70)	0.38	0.38	0.85		40
25. Slate Blue (L13)	0.29	0.25	0.86		29
26. Slate Gray (L14)	0.40	0.39	0.86		43
27. Stone White (V31)	0.61	0.61	0.85		72
28. Surrey Beige (V21)	0.40	0.39	0.86		43
29. Teal (L15)	0.30	0.28	0.85		30
30. Terra Cotta (V23)	0.39	0.38	0.84		41

G.4 - RECYCLED CONTENT / BIO-BASED MATERIAL / RAPIDLY RENEWABLE MATERIAL

Component Name	% Recycled Content at Manuf.	% Recycled at Disposal	% Bio-based Material	% Renewable Material
1. Sentrigard ML 100 H (Steel)	31.96%	100%		

G.6 - ROOF SYSTEM LIFE CYCLE

Years	Assemblies:
40	Sentigard Metal Roofing Systems Association, Corp – All Assemblies