MIAMI-DADE COUNTY
BUILDING CODE COMPLIANCE OFFICE (BCCO)
PRODUCT CONTROL DIVISION

MIAMI-DADE COUNTY, FLORIDA
METRO-DADE FLAGLER BUILDING
140 WEST FLAGLER STREET, SUITE 1603
MIAMI, FLORIDA 33130-1563
(305) 375-2901 FAX (305) 372-6339
www.miamidade.gov/buildingcode

NOTICE OF ACCEPTANCE (NOA)

Shildan, Inc.
2047 Briggs Road
Mount Laurel, NJ 08054

SCOPE:

This NOA is being issued under the applicable rules and regulations governing the use of construction materials. The documentation submitted has been reviewed by Miami-Dade County Product Control Division and accepted by the Board of Rules and Appeals (BORA) to be used in Miami Dade County and other areas where allowed by the Authority Having Jurisdiction (AHJ).

This NOA shall not be valid after the expiration date stated below. The Miami-Dade County Product Control Division (In Miami Dade County) and/or the AHJ (in areas other than Miami Dade County) reserve the right to have this product or material tested for quality assurance purposes. If this product or material fails to perform in the accepted manner, the manufacturer will incur the expense of such testing and the AHJ may immediately revoke, modify, or suspend the use of such product or material within their jurisdiction. BORA reserves the right to revoke this acceptance, if it is determined by Miami-Dade County Product Control Division that this product or material fails to meet the requirements of the applicable building code.

This product is approved as described herein, and has been designed to comply with the Florida Building Code, including the High Velocity Hurricane Zone.

DESCRIPTION: Longoton® Terracotta Siding System

APPROVAL DOCUMENT: Drawing No. **10-03**, titled "Longoton Terracotta Rainscreen System " sheets 1 through 9 of 9, dated 05/18/10, prepared by Al-Farooq Corporation, signed and sealed by Javad Ahmad, P.E., bearing the Miami-Dade County Product Control Approval stamp with the Notice of Acceptance number and approval date by the Miami-Dade County Product Control Division.

MISSILE IMPACT RATING: Large and Small Missile Impact Resistant

LABELING: Each unit shall bear a permanent label with the manufacturer's name or logo, city, state and following statement: "Miami-Dade County Product Control Approved", unless otherwise noted herein.

RENEWAL of this NOA shall be considered after a renewal application has been filed and there has been no change in the applicable building code negatively affecting the performance of this product.

TERMINATION of this NOA will occur after the expiration date or if there has been a revision or change in the materials, use, and/or manufacture of the product or process. Misuse of this NOA as an endorsement of any product, for sales, advertising or any other purposes shall automatically terminate this NOA. Failure to comply with any section of this NOA shall be cause for termination and removal of NOA.

ADVERTISEMENT: The NOA number preceded by the words Miami-Dade County, Florida, and followed by the expiration date may be displayed in advertising literature. If any portion of the NOA is displayed, then it shall be done in its entirety.

INSPECTION: A copy of this entire NOA shall be provided to the user by the manufacturer or its distributors and shall be available for inspection at the job site at the request of the Building Official.

This NOA consists of this page 1 and evidence page E-1, as well as approval document mentioned above.

The submitted documentation was reviewed by **Carlos M. Utrera, P.E.**

MIAMI-DADE COUNTY APPROVED

07/28/10

NOTICE OF ACCEPTANCE: EVIDENCE SUBMITTED

A. DRAWINGS

1. Drawing No. **10-03**, titled "Longoton Terracotta Rainscreen System" sheets 1 through 9 of 9, dated 05/18/10, prepared by Al-Farooq Corporation, signed and sealed by Javad Ahmad, P.E.

B. TESTS

1. Test reports on 1) Air Infiltration Test, per FBC, TAS 202-94
2) Uniform Static Air Pressure Test, Loading per FBC TAS 202-94
3) Water Resistance Test, per FBC, TAS 202-94
4) Large Missile Impact Test per FBC, TAS 201-94
5) Cyclic Wind Pressure Loading per FBC, TAS 203-94
6) Tile Transverse Breaking Strength per ASTM C1167

along with marked-up drawings and installation diagram of Series/Model Longoton Terra Cotta Tiles System, prepared by Fenestration Testing Laboratory, Inc, Test Report No. **FTL # 6218**, dated 05/28/10, signed and sealed by Jorge A. Causo, P.E.

C. CALCULATIONS

1. Anchor verification calculations and structural analysis, complying with FBC-2007, prepared by Al-Farooq Corporation, dated 06/18/10, signed and sealed by Javad Ahmad, P.E.

D. QUALITY ASSURANCE

1. Miami Dade Building Code Compliance Office (BCCO).

E. MATERIAL CERTIFICATIONS

1. None.

F. STATEMENTS

1. Statement letter of code conformance to 2007 FBC and no financial interest, issued by Al-Farooq Corporation, dated 06/18/10, signed and sealed by Javad Ahmad, P.E.

2. Distributor Agreement dated 07/13/10.

07/28/10

Carlos M. Utrera, P.E.
Product Control Examiner
NOA No. 10-0624.01
Expiration Date: August 18, 2015
Approval Date: August 18, 2010

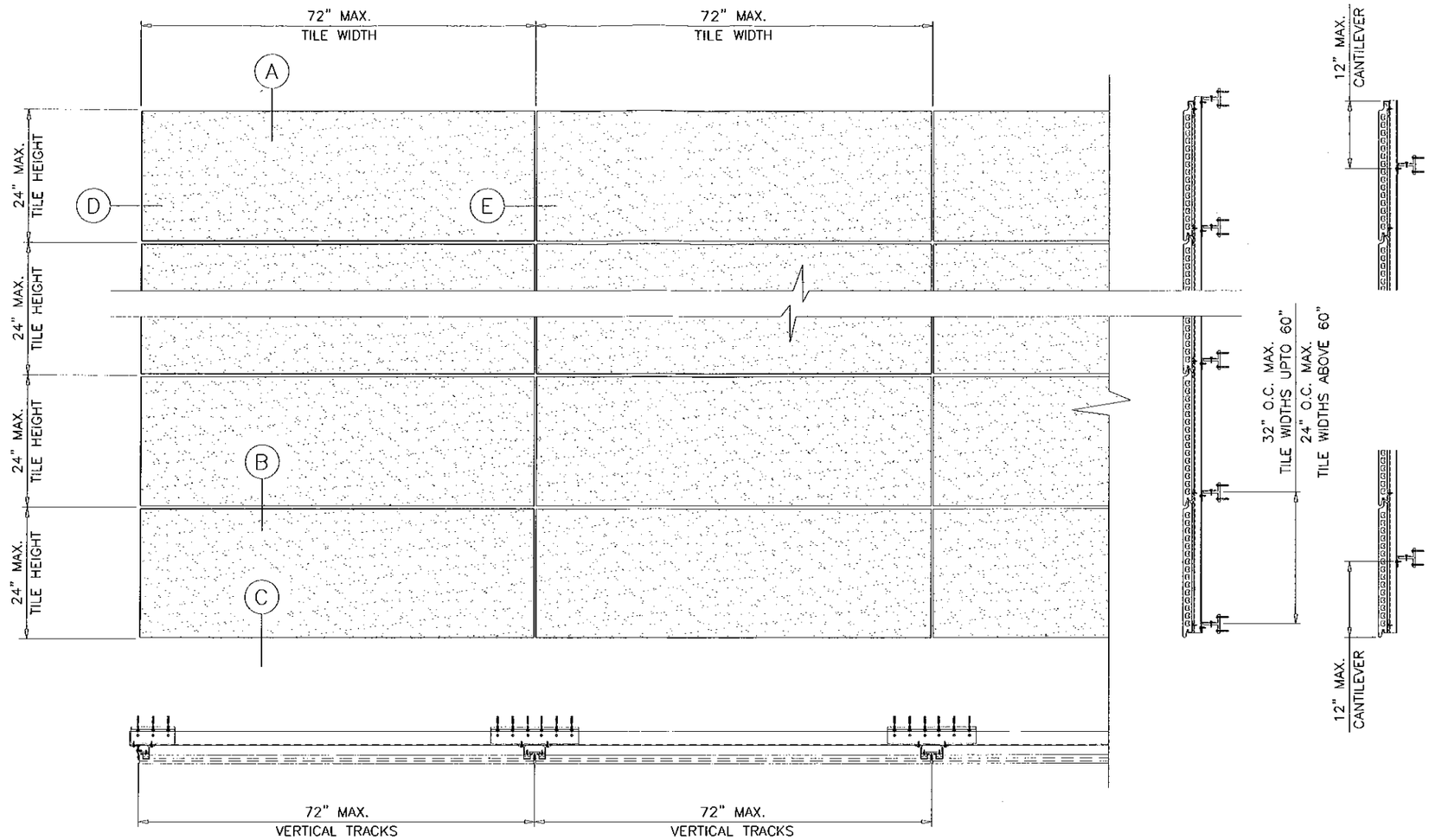

TYPICAL ELEVATION

MASONRY OR CONCRETE STRUCTURES

LONGOTON TERRACOTTA RAINSCREEN SYSTEM

TERRACOTTA TILES ANCHORED TO SHEAR WALLS AS EXTERIOR CLADDING.

APPROVAL APPLIES TO MULTIPLE UNIT INSTALLATIONS

MAX. DESIGN LOAD = + 80.0 PSF
− 80.0 PSF

MAX. VERTICAL TRACK SPACING = 72 IN.

MAX. TILE SIZE= 24" HIGH X 72" WIDE

THIS PRODUCT HAS BEEN DESIGNED AND TESTED TO COMPLY WITH THE REQUIREMENTS OF THE FLORIDA BUILDING CODE 2007 EDITION INCLUDING HIGH VELOCITY HURRICANE ZONE (HVHZ).

ANCHORS SHALL BE AS LISTED, SPACED AS SHOWN ON DETAILS, ANCHORS EMBEDMENT TO BASE MATERIAL SHALL BE BEYOND WALL DRESSING OR STUCCO.

ANCHORING OR LOADING CONDITIONS NOT SHOWN IN THESE DETAILS ARE NOT PART OF THIS APPROVAL.

MATERIALS INCLUDING BUT NOT LIMITED TO STEEL/METAL SCREWS, THAT COME INTO CONTACT WITH OTHER DISSIMILAR MATERIALS SHALL MEET THE REQUIREMENTS OF 2007 FLORIDA BLDG. CODE SECTION 2003.8.4.

AVERAGE BREAKING LOAD PER ASTM C1167 = 1260 Lbs

Engr: JAVED AHMAD
CIVIL
FLA. PE # 70590
C.A.N. 3938
JUL 21 2010

Approved as complying with the Florida Building Code
Date 03/18/2010
NOA# 10-0622.01
Miami Dade Product Control Division
By

AL-FAROOQ CORPORATION
ENGINEERS & PRODUCT DEVELOPMENT
1235 S.W. 87 AVE
MIAMI, FLORIDA 33174
TEL. (305) 264-8100 FAX. (305) 262-6978

STORE\10-03SNI

LONGOTON TERRACOTTA RAINSCREEN SYSTEM

SHILDAN INC.
2047 BRIGGS ROAD
MT. LAUREL, NJ. 08054
TEL. (215) 525-4510 FAX. (215) 525-4511

revisions:

no	date	by	description
A	07.20.10		REV. PER BCCO COMMENTS

date: 05-18-10
scale: 1/2"=1'-0"
dr. by: HAMID
chk. by:

drawing no.
10-03

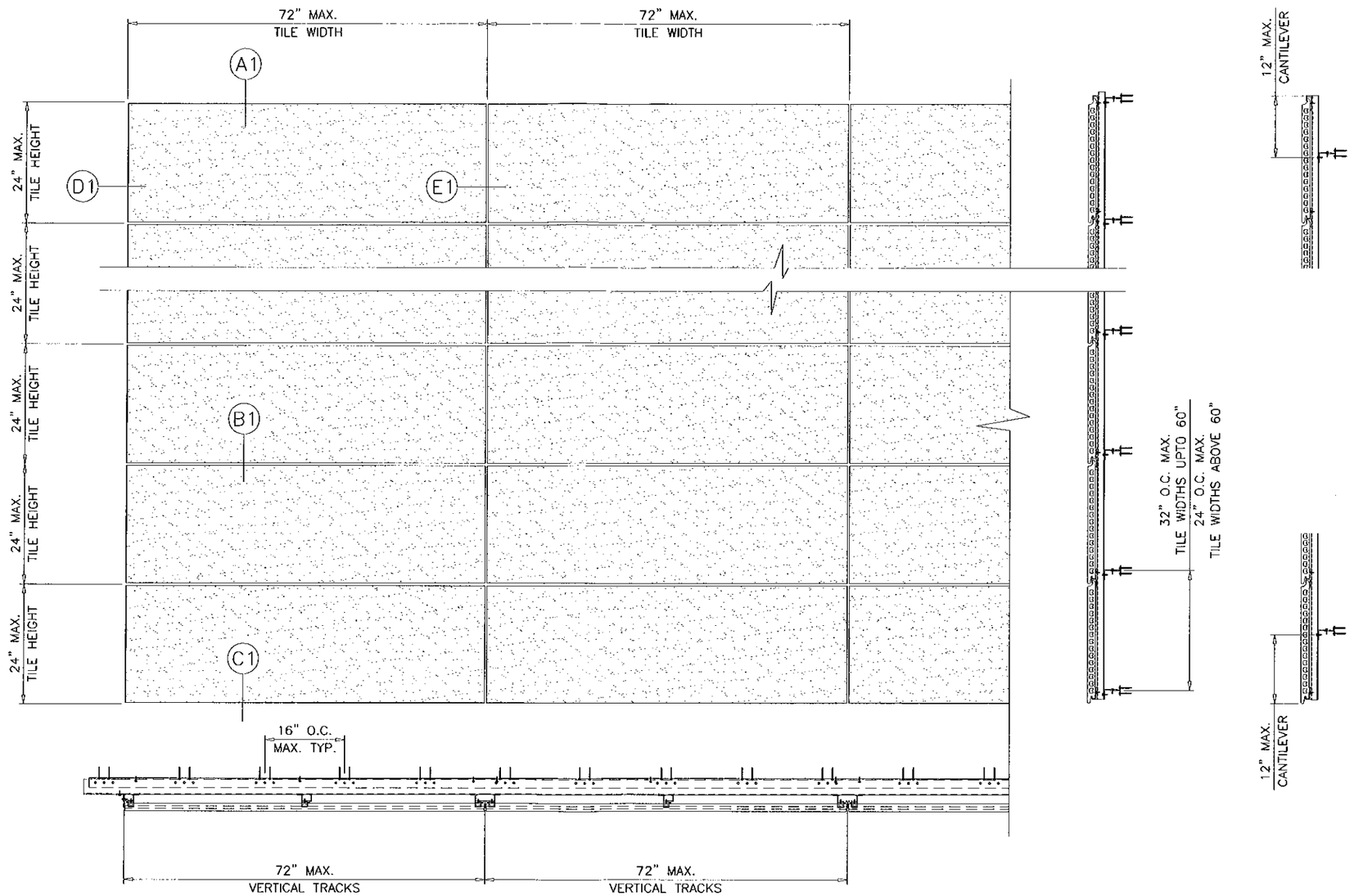

TYPICAL ELEVATION

AT STEEL STUD FRAMING SYSTEM

MAX. VERTICAL TRACK SPACING = 72 IN.
MAX. TILE SIZE= 24" HIGH X 72" WIDE

Engr: JAVAD AHMAD
CIVIL
FLA. PE # 70592
C.A.N. 3538

JUL 21 2010

Approved as complying with the Florida Building Code
Date 08/18/2010
NOA# 10-0624.01
Miami Dade Product Control Division
By

AL-FAROOQ CORPORATION
ENGINEERS & PROJECT DEVELOPMENT
1235 S.W. 87 AVE
MIAMI, FLORIDA 33174
TEL. (305) 264-8100 FAX. (305) 262-6978

STORE\10-03SNI

LONGOTON TERRACOTTA RAINSCREEN SYSTEM

SHILDAN INC.
2047 BRIGGS ROAD
MT. LAUREL, NJ. 08054
TEL. (215) 525-4510 FAX. (215) 525-4511

revisions:

no	date	by	description
A	07.20.10		NO CHANGE THIS SHEET

date: 05-18-10
scale: 1/2"=1'-0"
dr. by: HAMID
chk. by:

drawing no.
10-03

sheet 2 of 9

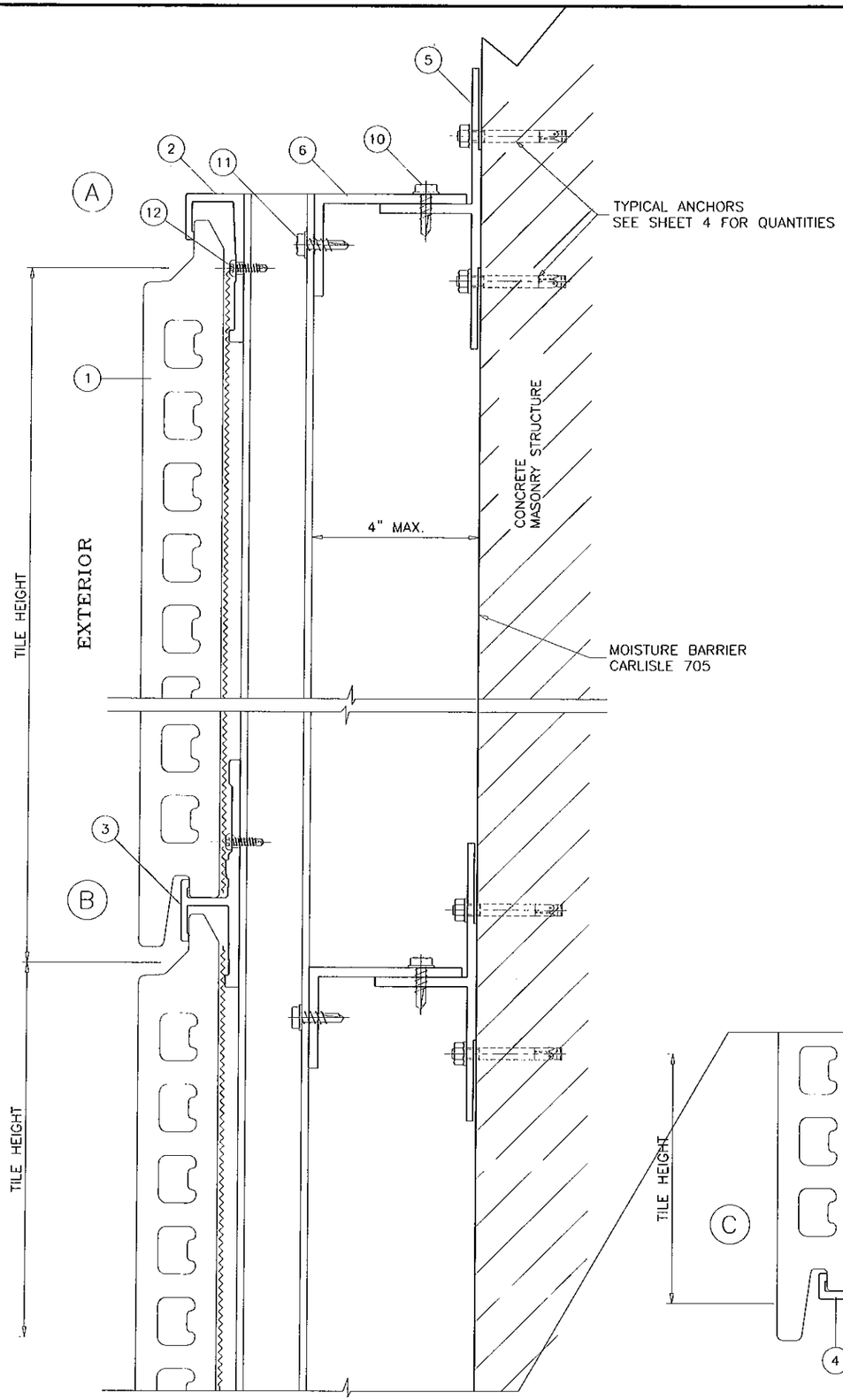

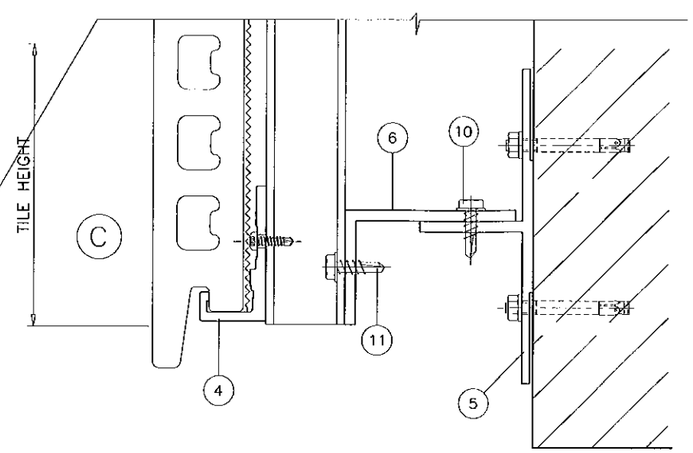

TYPICAL ANCHORS:

1/4" DIA. ULTRACON BY 'ELCO' (Fu=177 KSI, Fy=155 KSI)

INTO 2BY WOOD BUCKS OR WOOD STRUCTURES
1-3/8" MIN. PENETRATION INTO WOOD

DIRECTLY INTO CONC. OR MASONRY
1-1/4" MIN. EMBED INTO CONC. OR MASONRY

#14 SMS OR SELF DRILLING SCREWS (GRADE 2 CRS)
INTO METAL STRUCTURES

STEEL : 12 GA. MIN. (Fy = 36 KSI MIN.)
ALUMINUM : 1/8" THK. MIN. (6063-T5 MIN.)
(STEEL IN CONTACT WITH ALUMINUM TO BE PLATED OR PAINTED)

TYPICAL EDGE DISTANCE

INTO CONCRETE AND MASONRY = 2-1/2" MIN.
INTO WOOD STRUCTURE = 1" MIN.
INTO METAL STRUCTURE = 3/4" MIN.

CONCRETE f'c = 3000 PSI MIN.
C-90 HOLLOW/FILLED BLOCK f'm = 2000 PSI MIN.

Engr. JAVAD AHMAD
CIVIL
FLA. PE # 70592
C.A.N. 3538
JUL 21 2010

Approved as complying with the Florida Building Code
Date 08/18/2010
NOA# 10-0624.01
Miami Dade Product Control Division
By

AL-FAROOQ CORPORATION
ENGINEERS & PRODUCT DEVELOPMENT
1235 S.W. 87 AVE
MIAMI, FLORIDA 33174
TEL. (305) 264-8100 FAX. (305) 262-6978
STORE\10-03SNI

LONGOTON TERRACOTTA RAINSCREEN SYSTEM

SHILDAN INC.
2047 BRIGGS ROAD
MT. LAUREL, NJ. 08054
TEL. (215) 525-4510 FAX. (215) 525-4511

revisions:

no	date	by	description
A	07.20.10		REV. PER BCCO COMMENTS

date: 05-18-10
scale: 3/8" = 1"
dr. by: HAMID
chk. by:

drawing no.
10-03

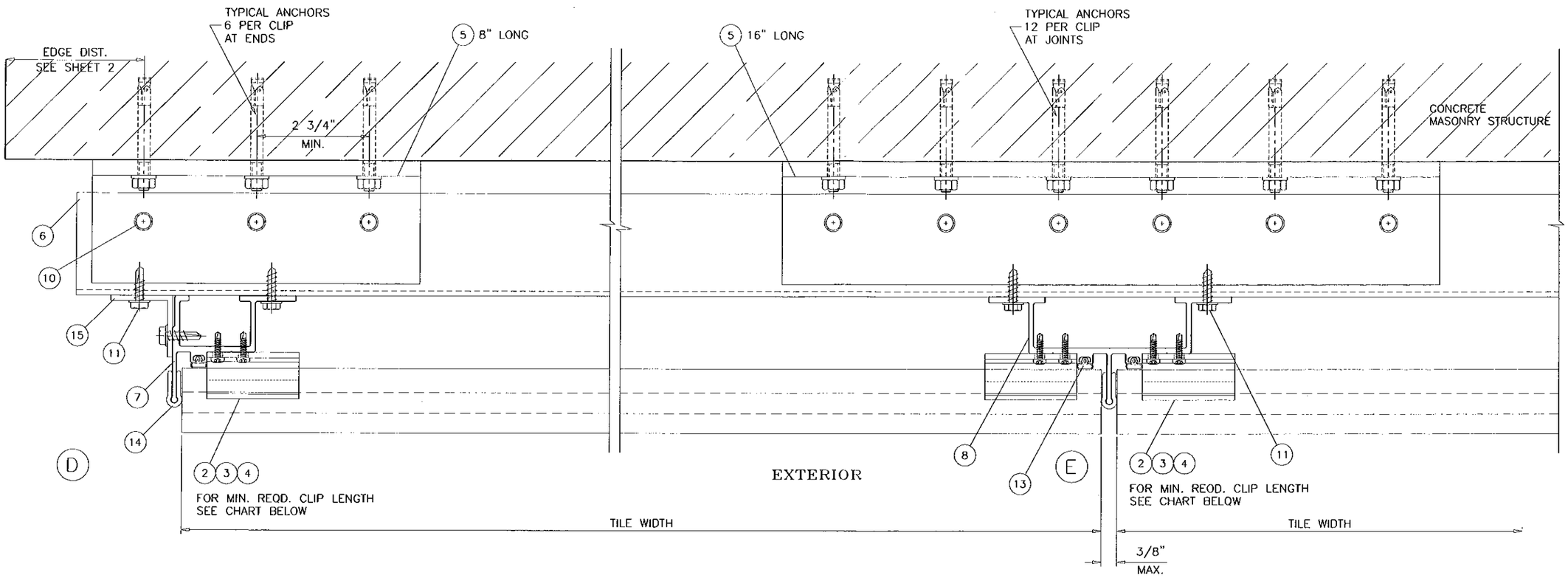

TILE WIDTH	CLIP LENGTH
72"	2-1/4"
60"	1-7/8"
48"	1-1/2"

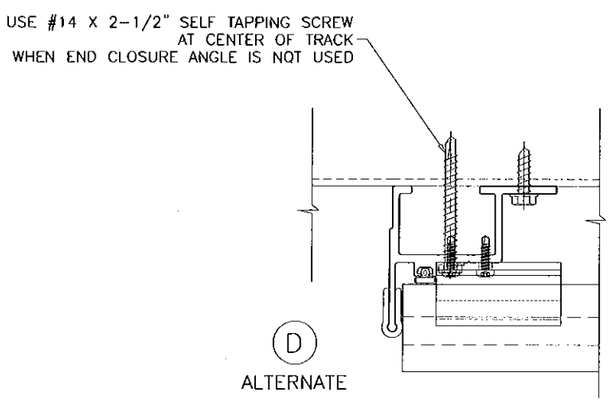

Engr: JAVAD AHMAD
CIVIL
FLA. PE # 70592
C.A.N. 3538
JUL 21 2010

Approved as complying with the
Florida Building Code
Date 08/18/2010
NOA# 10-0624.01
Miami Dade Product Control
Division
By

AL-FAROOQ CORPORATION
ENGINEERS & PRODUCT DEVELOPMENT
1235 S.W. 87 AVE
MIAMI, FLORIDA 33174
TEL. (305) 264-8100 FAX. (305) 262-6978

STORE\10-03SNI

LONGOTON TERRACOTTA RAINSCREEN SYSTEM

SHILDAN INC.
2047 BRIGGS ROAD
MT. LAUREL, N.J. 08054
TEL. (215) 525-4510 FAX. (215) 525-4511

revisions:

no.	date	by	description
A	07.20.10		REV. PER BCCO COMMENTS

date: 05-18-10
scale: 3/8" = 1"
dr. by: HAMID
chk. by:

drawing no.
10-03

sheet 4 of 9

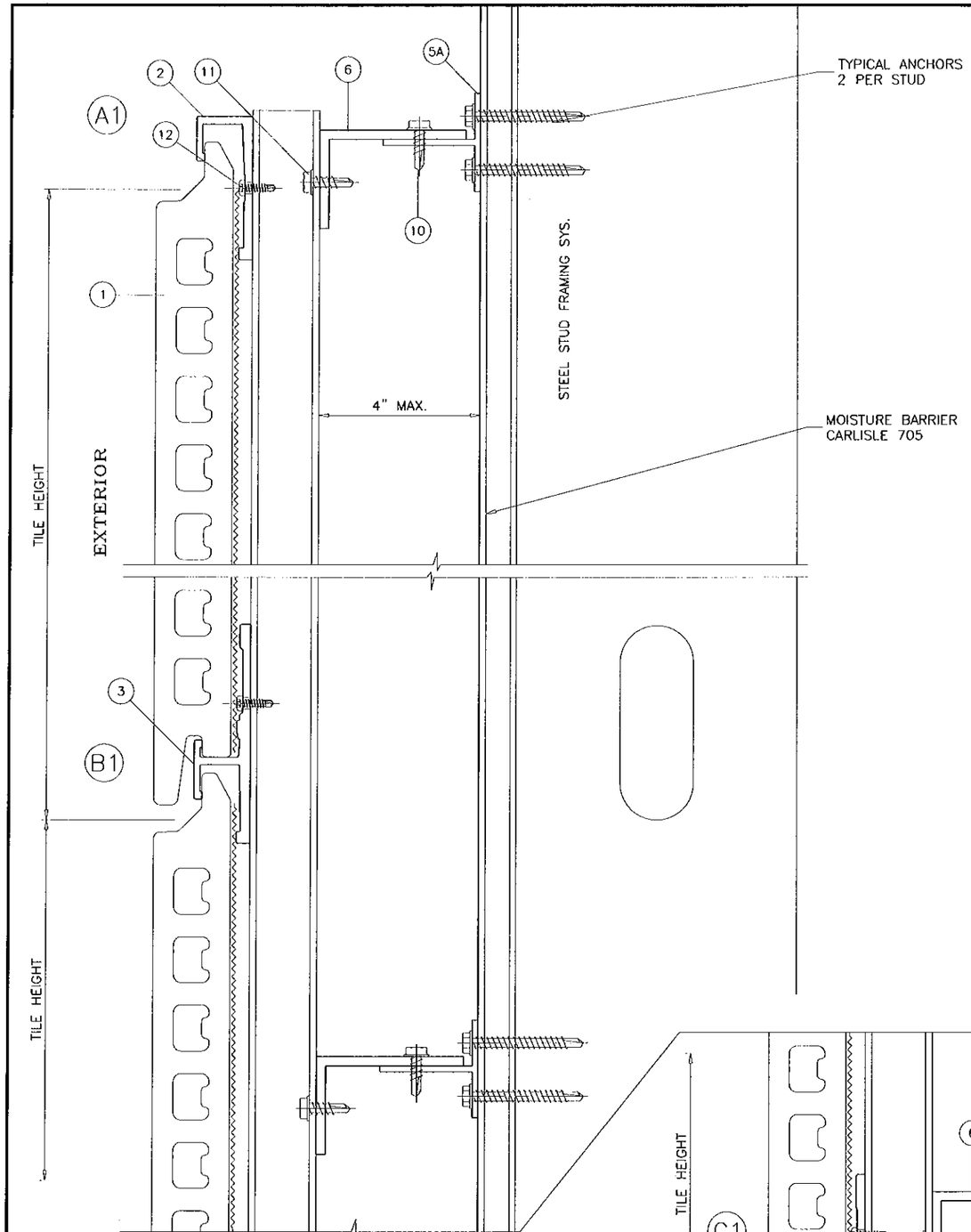

METAL STRUCTURES NOT BY SHILDAN INC.,
MUST SUSTAIN LOADS IMPOSED BY CLADDING SYSTEM AND
TRANSFER THEM TO THE BUILDING STRUCTURE.

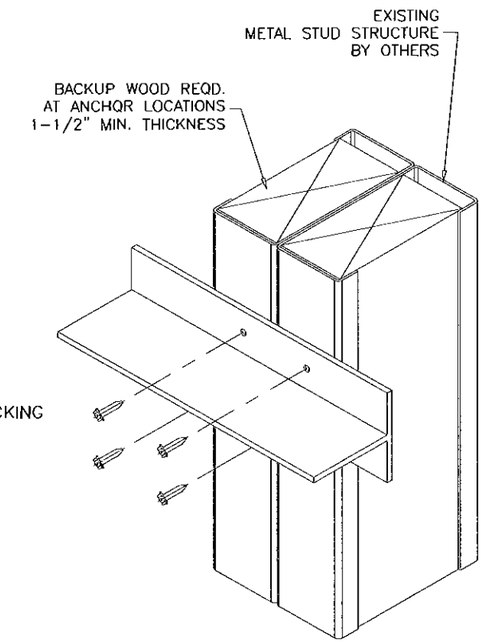

TYPICAL ANCHORS:

TYPE 'B' #12 SMS OR SELF DRILLING SCREWS
INTO METAL STUDS WITH WOOD BACKING
1-3/8" MIN. PENETRATION INTO WOOD BACKING

TYPICAL EDGE DISTANCE
INTO WOOD STRUCTURE = 1" MIN.

Engr: JAVAD AHMAD
CIVIL
FLA. PE # 70592
C.A.N. 3538

JUL 21 2010

Approved as complying with the
Florida Building Code
Date 08/18/2010
NOA# 10-0624.01
Miami Dade Product Control
Division
By

AL-FAROOQ CORPORATION
ENGINEERS & PRODUCT DEVELOPMENT
1235 S.W. 87 AVE
MIAMI, FLORIDA 33174
TEL. (305) 264-8100 FAX. (305) 262-6978

STORE\10-03SNI

LONGOTON TERRACOTTA RAINSCREEN SYSTEM

SHILDAN INC.
2047 BRIGGS ROAD
MT. LAUREL, NJ. 08054
TEL. (215) 525-4510 FAX. (215) 525-4511

revisions:

no.	date	by	description
A	07.20.10		REV. PER BCCO COMMENTS

date: 05-18-10
scale: 3/8" = 1"
dr. by: HAMID
chk. by:

drawing no.
10-03

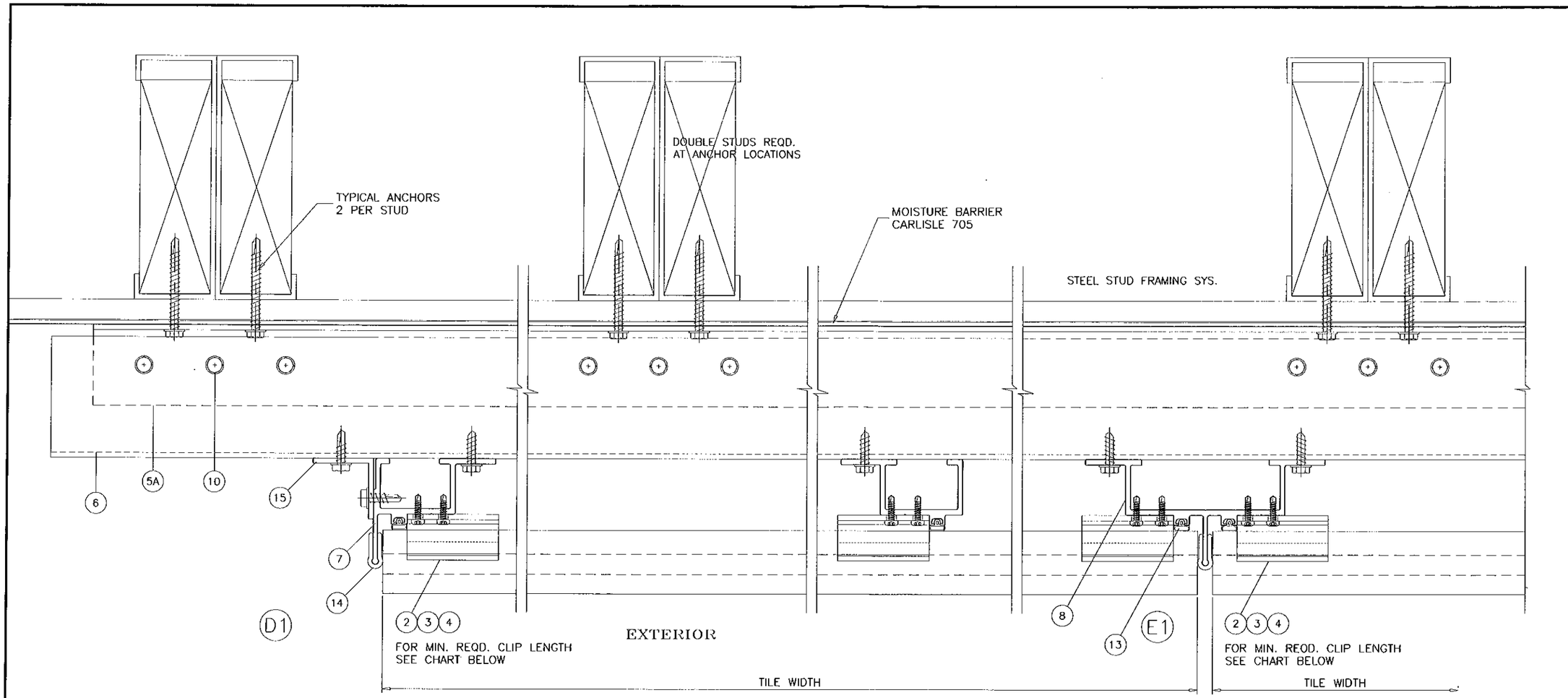

TILE WIDTH	CLIP LENGTH
72"	2-1/4"
60"	1-7/8"
48"	1-1/2"

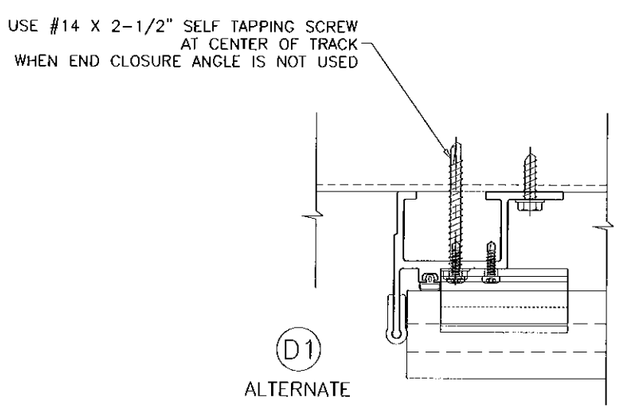

Engr: JAVAD AHMAD
CIVIL
FLA. PE # 70592
C.A.N. 3538

JUL 21 2010

Approved as complying with the
Florida Building Code
Date 08/18/2010
NOA# 10-0624.01
Miami Dade Product Control
Division
By

AL-FAROOQ CORPORATION
ENGINEERS & PRODUCT DEVELOPMENT
1235 S.W. 87 AVE
MIAMI, FLORIDA 33174
TEL. (305) 264-8100 FAX. (305) 262-6978

STORE\10-03SNI

LONGOTON TERRACOTTA RAINSCREEN SYSTEM

SHILDAN INC.
2047 BRIGGS ROAD
MT. LAUREL, NJ. 08054
TEL. (215) 525-4510 FAX. (215) 525-4511

revisions:

no	date	by	description
A	07.20.10		REV. PER BCCO COMMENTS

date: 05-18-10
scale: 3/8" = 1"
dr. by: HAMID
chk. by:

drawing no.
10-03

sheet 6 of 9

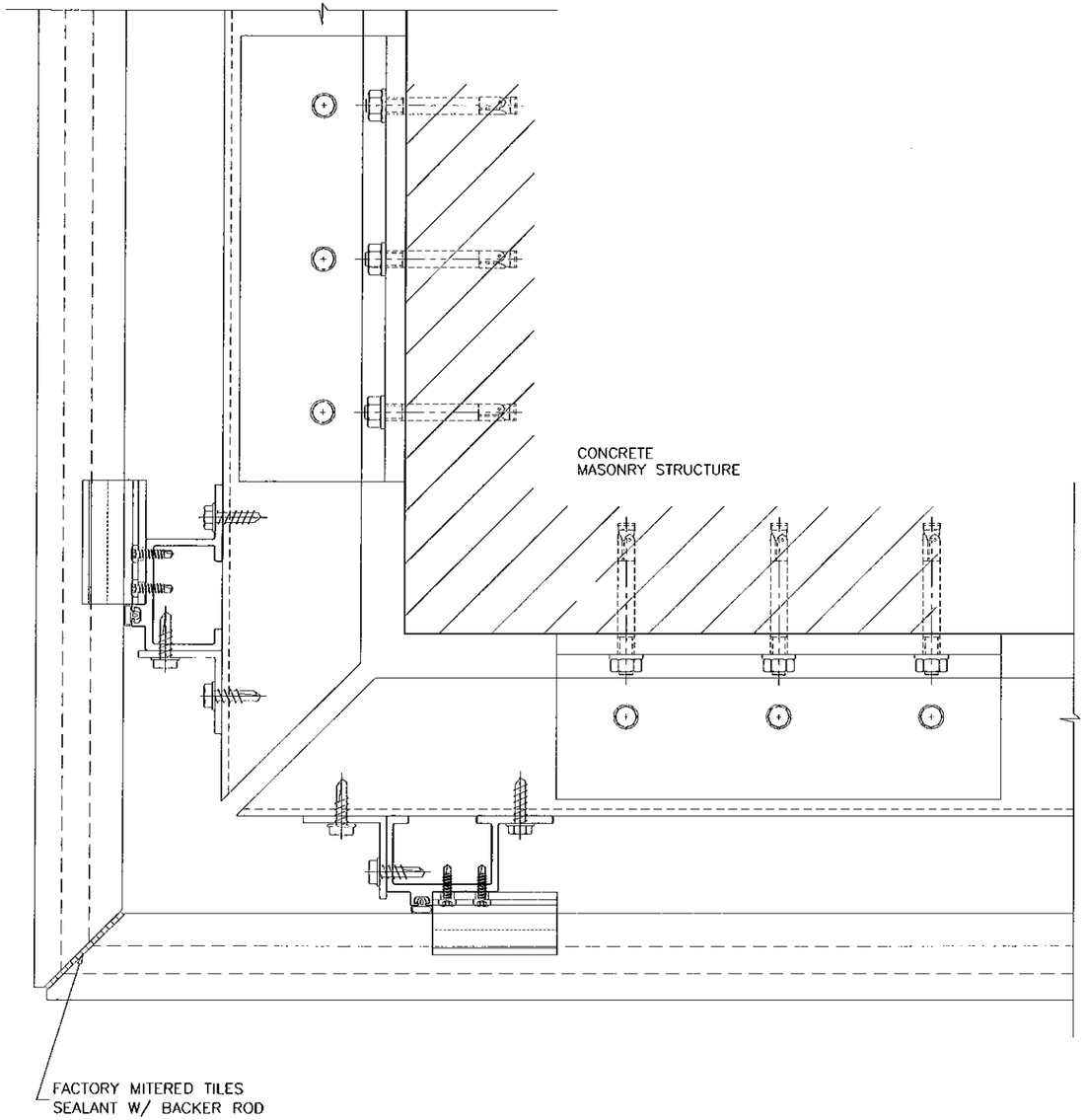

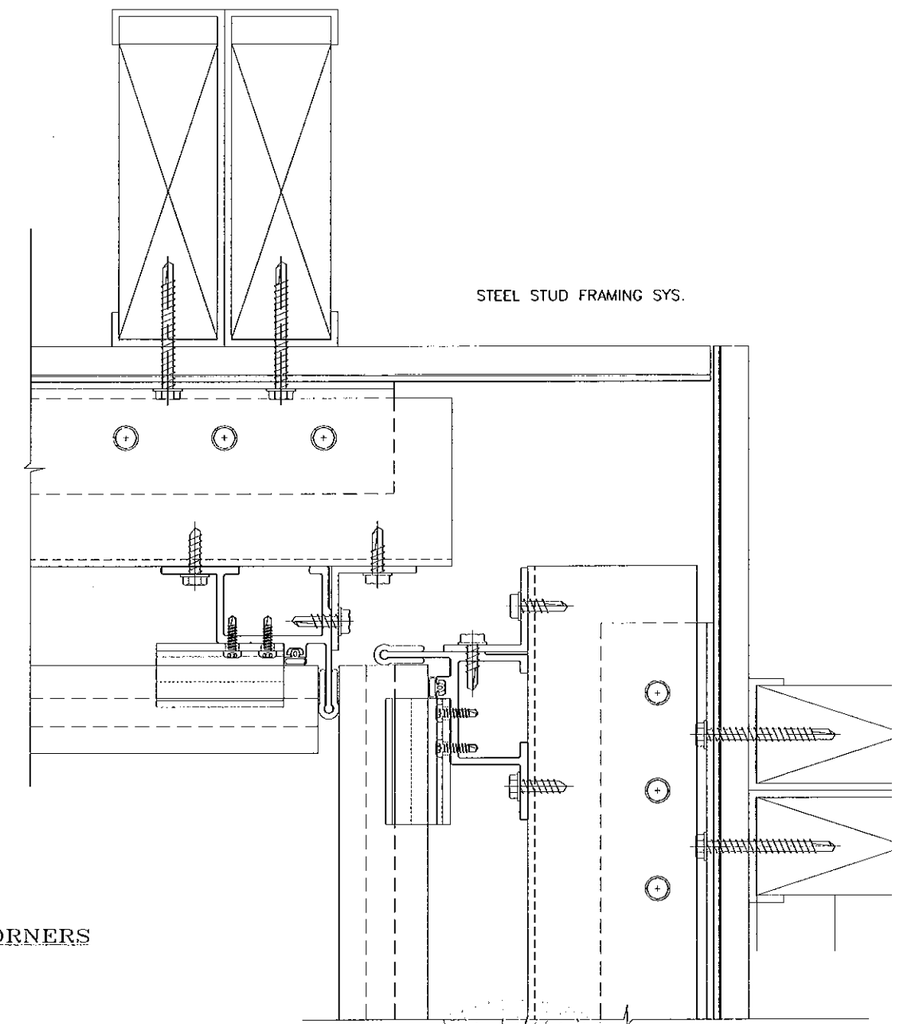

OUTSIDE OR INSIDE CORNERS

Engr: JAVAID AHMAD
CIVIL
FLA. PE # 70592
C.A.N. 3538
JUL 31 2010

Approved as complying with the Florida Building Code
Date 08/18/2010
NOA# 10-0624.01
Miami Dade Product Control Division
By

AL-FAROOQ CORPORATION
ENGINEERS & PRODUCT DEVELOPMENT
1235 S.W. 87 AVE
MIAMI, FLORIDA 33174
TEL. (305) 264-8100 FAX. (305) 262-6978
STORE\10-03SNI

LONGOTON TERRACOTTA RAINSCREEN SYSTEM

SHILDAN INC.
2047 BRIGGS ROAD
MT. LAUREL, NJ. 08054
TEL. (215) 525-4510 FAX. (215) 525-4511

revisions:

no	date	by	description
A	07.20.10		REV. PER BCCO COMMENTS

date: 05-18-10
scale: 3/8" = 1"
dr. by: HAMID
chk. by:

drawing no.
10-03

ITEM NO.	PART NUMBER	WEIGHT	QUANTITY	DESCRIPTION	MATERIAL	MANF./SUPPLIER/REMARKS
1	–	15.0 Lbs/Sq. Ft.	AS REQD.	LONGOTON TERRA COTTA TILE	TERRACOTTA	MOEDING KERAMIKFASSADEN GMBH
2	–	1.382 Lbs/Ft.	AS REQD.	TOP TILE CLIP, FOR LENGTHS SEE SHEETS 4 & 6	6063–T6	KEYMARK CORP.
3	–	1.352 Lbs/Ft.	AS REQD.	MID TILE CLIP, FOR LENGTHS SEE SHEETS 4 & 6	6005–T5	KEYMARK CORP.
4	–	1.074 Lbs/Ft.	AS REQD.	BOTTOM TILE CLIP, FOR LENGTHS SEE SHEETS 4 & 6	6005–T5	KEYMARK CORP.
5	–	1.418 Lbs/Ft.	AS REQD.	HORIZONTAL 'T' CLIP, 8" LONG @ ENDS, 16" LONG AT JOINTS	6005–T5	KEYMARK CORP.
5A	–	.562 Lbs/Ft.	AS REQD.	HORIZONTAL 'T' CLIP, CONTINUOUS	6063–T6	KEYMARK CORP.
6	–	.731 Lbs/Ft.	AS REQD.	CONTINUOUS ANGLE, 3/16" THK.	6061–T5	KEYMARK CORP.
7	–	1.132 Lbs/Ft.	AS REQD.	VERTICAL END TRACK	6063–T6	KEYMARK CORP.
8	–	1.663 Lbs/Ft.	AS REQD.	VERTICAL CENTER TRACK	6061–T6/6005–T5	KEYMARK CORP.
9	–	1.015 Lbs/Ft.	AS REQD.	VERTICAL CORNER TRACK	6061–T6/6005–T5	KEYMARK CORP.
10	#12 X 1"	–	AS REQD.	'T' BRACKET CLIP FASTENERS	–	SELF TAPPING HH
11	#14 X 1"	–	AS REQD.	VERTICAL TRACK TO ANGLE FASTENERS	–	SELF TAPPING HH
12	#14 X 1"	–	AS REQD.	TILE CLIP FASTENERS	–	SELF TAPPING HH
13	–	–	–	PRESSURE GASKET	–	TREMCO
14	–	–	–	SPACER GASKET	–	TREMCO
15	–	0.431 Lbs/Ft.	AS REQD.	END CLOSURE ANGLE	AUMINUM	KEYMARK CORP.

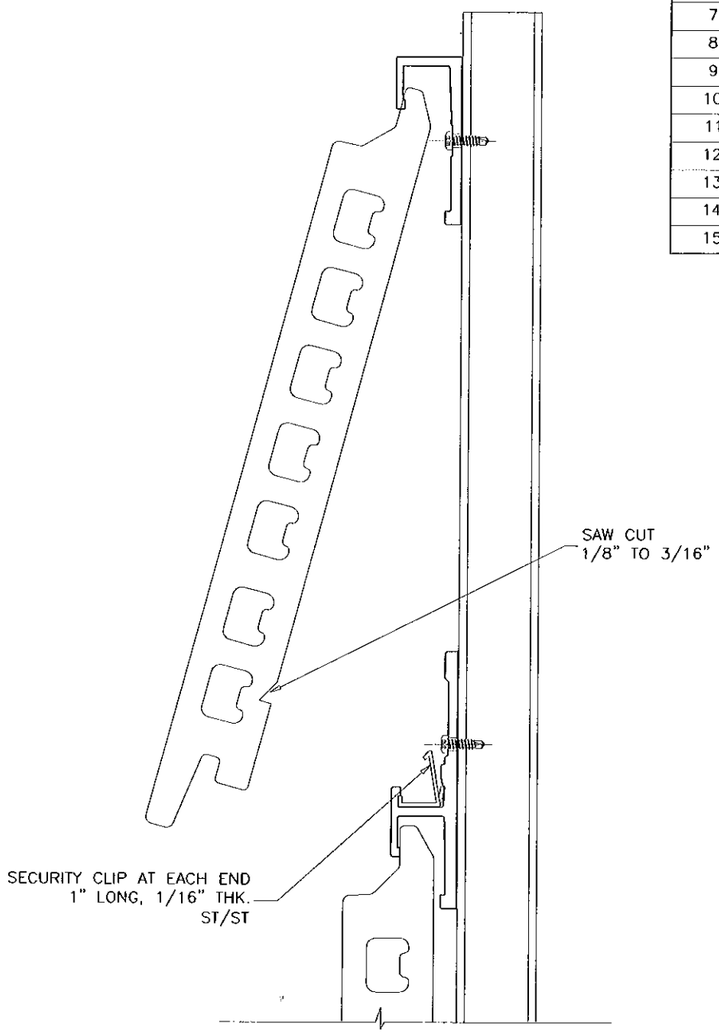

TILE REPLACEMENT DETAIL

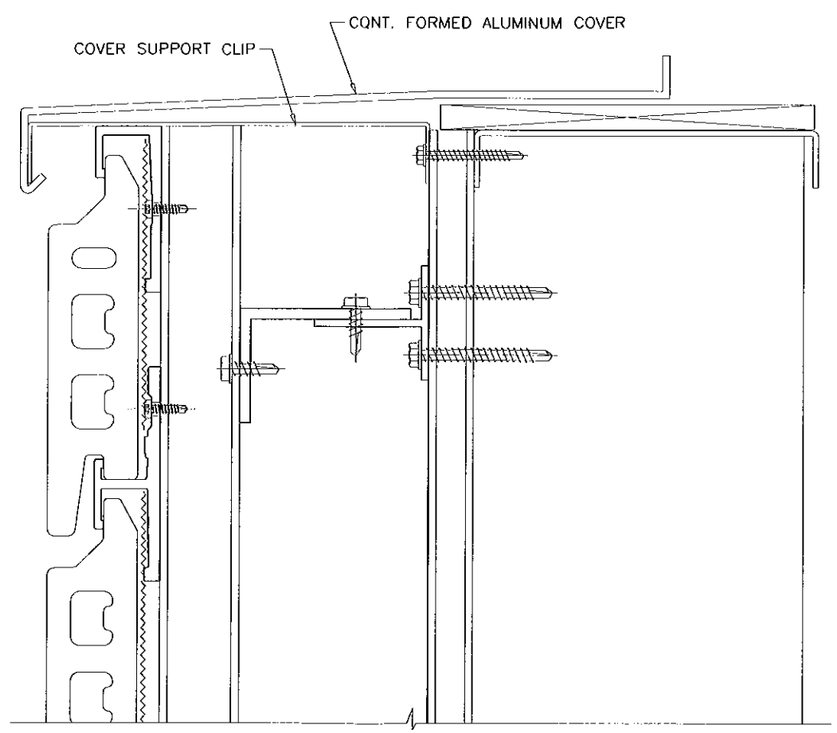

TOP CLOSURE DETAIL

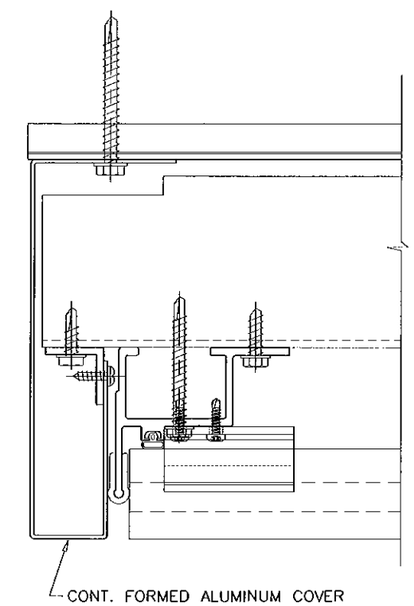

SIDE CLOSURE DETAIL

Engr: JAVAD AHMAD
CIVIL
FLA. REG. # 70592
C.A.N. 3538

JUL 21 2010

Approved as complying with the Florida Building Code
Date 08/19/2010
NOA# 10-0629.01
Miami Dade Product Control Division
By

AL-FAROOQ CORPORATION
ENGINEERS & PRODUCT DEVELOPMENT
1235 S.W. 87 AVE
MIAMI, FLORIDA 33174
TEL. (305) 264-8100 FAX. (305) 262-6978

STORE\10-03SNI

LONGOTON TERRACOTTA RAINSCREEN SYSTEM

SHILDAN INC.
2047 BRIGGS ROAD
MT. LAUREL, NJ. 08054
TEL. (215) 525-4510 FAX. (215) 525-4511

revisions:

no	date	by	description
A	07.20.10		REV. PER BCCO COMMENTS

date: 05-18-10
scale: 3/8" = 1"
dr. by: HAMID
chk. by:

drawing no.
10-03

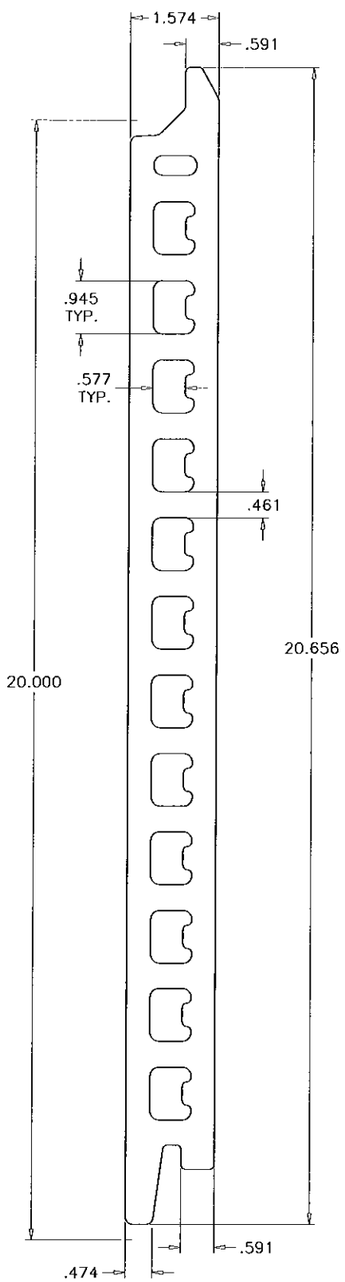

20"H X 72"W (SHOWN)
18"H X 72"W
16"H X 72"W
14"H X 72"W
12"H X 72"W

1 LONGOTON TERRACOTTA TILE

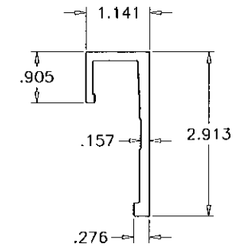

2 TOP TILE CLIP

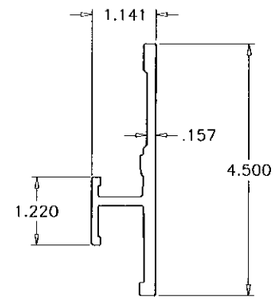

3 MID TILE CLIP

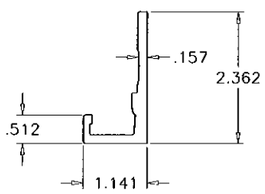

4 BOTTOM TILE CLIP

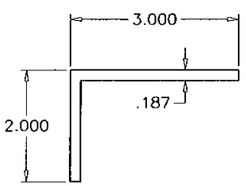

6 ALUM ANGLE

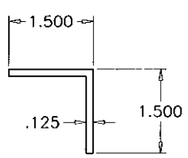

15 END CLOSURE ANGLE

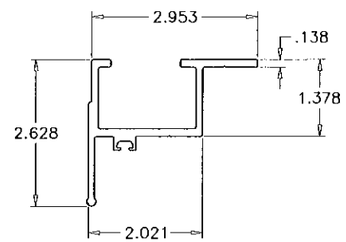

7 VERTICAL END TRACK

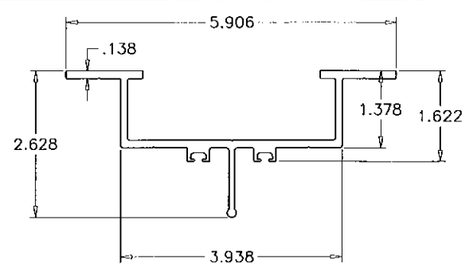

8 VERTICAL CENTER TRACK

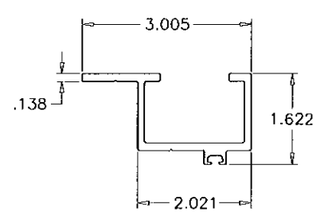

9 VERTICAL CORNER TRACK

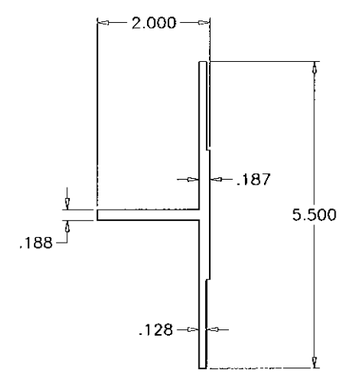

5 HORIZ. 'T' BRACKET

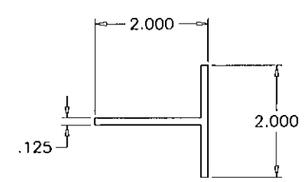

5A HORIZ. 'T' CONT.

Engr: JAVAD AHMAD
CIVIL
FLA. PE # 70592
C.A.N. 3538

JUL 8 2010

Approved as complying with the Florida Building Code
Date 08/18/2010
NOA# 10-0624.01
Miami Dade Product Control Division
By

AL-FAROOQ CORPORATION
ENGINEERS & PRODUCT DEVELOPMENT
1235 S.W. 87 AVE
MIAMI, FLORIDA 33174
TEL. (305) 264-8100 FAX. (305) 262-6978
STORE\10-03SNI

LONGOTON TERRACOTTA RAINSCREEN SYSTEM

SHILDAN INC.
2047 BRIGGS ROAD
MT. LAUREL, NJ. 08054
TEL. (215) 525-4510 FAX. (215) 525-4511

revisions:

no	date	by	description
A	07.20.10		REV. PER BCCO COMMENTS

date: 05-18-10
scale: 3/8" = 1"
dr. by: HAMID
chk. by:

drawing no.
10-03

sheet 9 of 9