MIAMI-DADE COUNTY
BUILDING CODE COMPLIANCE OFFICE (BCCO)
PRODUCT CONTROL DIVISION

MIAMI-DADE COUNTY, FLORIDA
METRO-DADE FLAGLER BUILDING
140 WEST FLAGLER STREET, SUITE 1603
MIAMI, FLORIDA 33130-1563
(305) 375-2901 FAX (305) 372-6339
www.miamidade.gov/buildingcode

NOTICE OF ACCEPTANCE (NOA)

USG Corporation
700 North Highway 45
Libertyville, IL 60048

SCOPE: This NOA is being issued under the applicable rules and regulations governing the use of construction materials. The documentation submitted has been reviewed by Miami-Dade County Product Control Division and accepted by the Board of Rules and Appeals (BORA) to be used in Miami Dade County and other areas where allowed by the Authority Having Jurisdiction (AHJ).

This NOA shall not be valid after the expiration date stated below. The Miami-Dade County Product Control Division (In Miami Dade County) and/or the AHJ (in areas other than Miami Dade County) reserve the right to have this product or material tested for quality assurance purposes. If this product or material fails to perform in the accepted manner, the manufacturer will incur the expense of such testing and the AHJ may immediately revoke, modify, or suspend the use of such product or material within their jurisdiction. BORA reserves the right to revoke this acceptance, if it is determined by Miami-Dade County Product Control Division that this product or material fails to meet the requirements of the applicable building code.

This product is approved as described herein, and has been designed to comply with the Florida Building Code, including the High Velocity Hurricane Zone.

DESCRIPTION: Drywall Suspension System with Glass-Mat Sheathing for Exterior Ceilings

APPROVAL DOCUMENT: Drawing No. **32815.3103**, titled "Drywall Suspension System with glass-mat sheathing for exterior applications", Sheets 1 through 5 of 5, dated 01/26/10, prepared by PEI Engineering Services, Inc, signed and sealed by Steve Maierle, P.E., bearing the Miami-Dade County Product Control approval stamp with the Notice of Acceptance number and approval date by the Miami-Dade County Product Control Division.

MISSILE IMPACT RATING: None

LABELING: Metal grid main tees shall bear a permanent label with "MDCPCA" and on each carton it shall state: USG Corp, Westlake, OH.

Securock sheathing boards shall be permanently labeled with one of the following:

Securock	Securock	Securock	Securock
Empire, NV	Hagersville, ON	Mediapolis, IA	Sweetwater, TX

and the statement: "Miami-Dade County Product Control Approved".

RENEWAL of this NOA shall be considered after a renewal application has been filed and there has been no change in the applicable building code negatively affecting the performance of this product.

TERMINATION of this NOA will occur after the expiration date or if there has been a revision or change in the materials, use, and/or manufacture of the product or process. Misuse of this NOA as an endorsement of any product, for sales, advertising or any other purposes shall automatically terminate this NOA. Failure to comply with any section of this NOA shall be cause for termination and removal of NOA.

ADVERTISEMENT: The NOA number preceded by the words Miami-Dade County, Florida, and followed by the expiration date may be displayed in advertising literature. If any portion of the NOA is displayed, then it shall be done in its entirety.

INSPECTION: A copy of this entire NOA shall be provided to the user by the manufacturer or its distributors and shall be available for inspection at the job site at the request of the Building Official.

This NOA consists of this page 1 and evidence page E-1, as well as approval document mentioned above.

The submitted documentation was reviewed by **Carlos M. Utrera, P.E.**

MIAMI-DADE COUNTY APPROVED

09/02/10

USG Corporation

NOTICE OF ACCEPTANCE: EVIDENCE SUBMITTED

A. DRAWINGS

1. Drawing No. **32815.3103**, , titled "Drywall Suspension System with glass-mat sheathing for exterior applications", Sheets 1 through 5 of 5, dated 01/26/10, prepared by PEI Engineering Services, Inc, signed and sealed by Steve Maierle, P.E.

B. TESTS

1. Test reports on 1) Air Infiltration Test, per FBC, TAS 202-94
   2) Uniform Static Air Pressure Test, Loading per FBC TAS 202-94
   3) Water Resistance Test, per FBC, TAS 202-94
   4) Cyclic Wind Pressure Loading per FBC, TAS 203-94

   along with marked-up drawings and installation diagram of Drywall Suspension System with Securock Glass-Mat Sheathing, prepared by Hurricane Test Laboratory, LLC, Test Report No. **0141-1101-09**, dated 04/13/10, signed and sealed by Vinu Abraham, P.E.

C. CALCULATIONS

1. Anchor verification calculations, prepared by PEI Engineering Services, Inc, dated 06/16/10, signed and sealed by Steve Maierle, P.E.

D. QUALITY ASSURANCE

1. Miami Dade Building Code Compliance Office (BCCO)

E. MATERIAL CERTIFICATIONS

1. None.

F. STATEMENTS

1. Statement letter of code conformance to FBC 2007, issued by PEI Engineering Services, Inc, dated 06/16/10, signed and sealed by Steve Maierle, P.E.
2. Statement letter of no financial interest, issued by PEI Engineering Services, Inc, dated 06/16/10, signed and sealed by Steve Maierle, P.E.

09/02/10

Carlos M. Utrera, P.E.
Product Control Examiner
NOA No. 10-0629.02
Expiration Date: September 08, 2015
Approval Date: September 08, 2010

PEI ENGINEERING SERVICES, INC.
58640 SR 15; GOSHEN, IN 46528
PHONE 574-534-7333
COA 27447

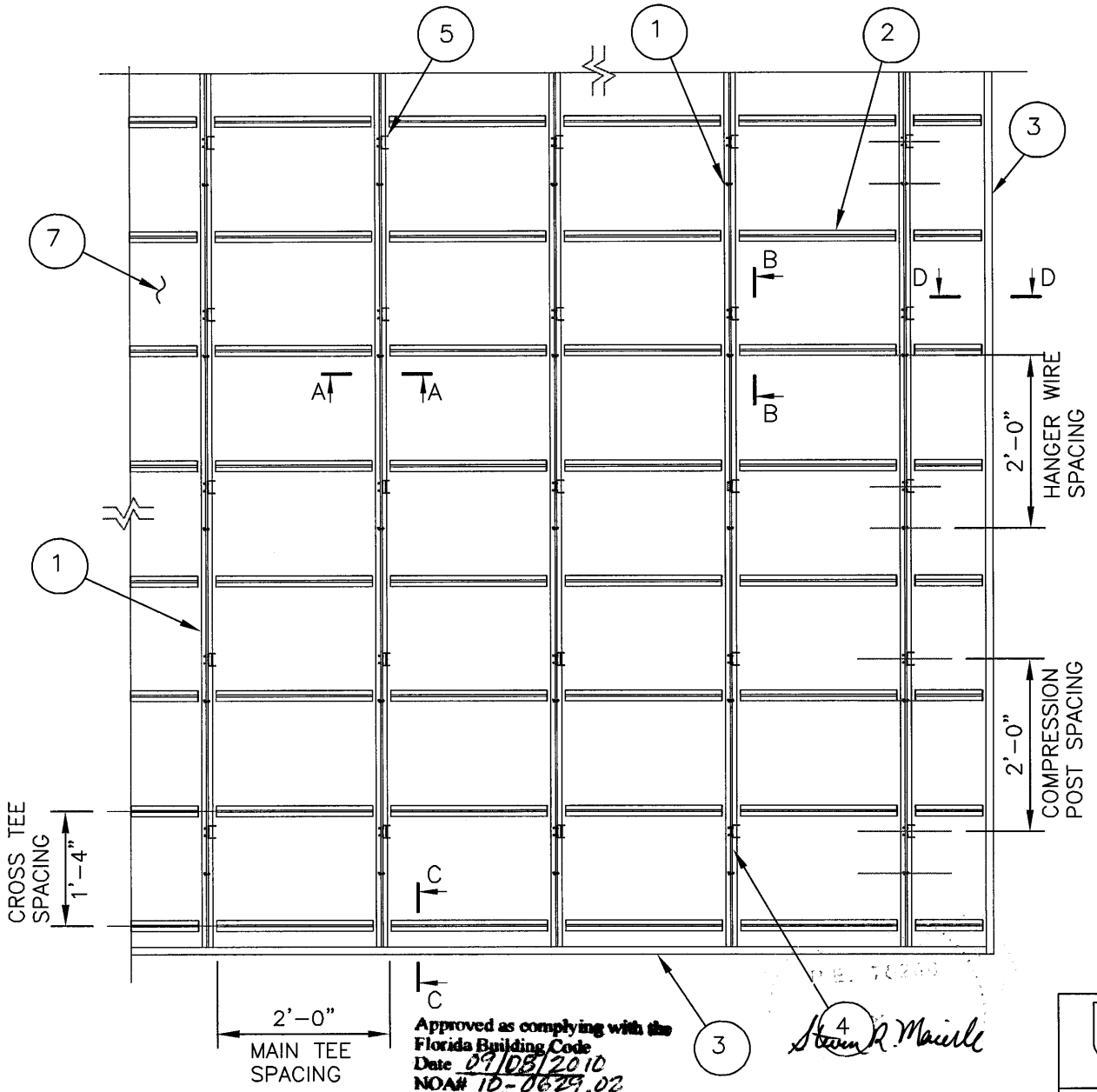

Approved as complying with the Florida Building Code
Date 09/08/2010
NOA# 10-0629.02
Miami Dade Product Control Division
By

PLAN

DESIGN PRESSURE
+75 PSF/-75 PSF

JUN 1 6 2010

NOTES:

1. COMPRESSION POSTS SHALL BE ATTACHED TO MAIN TEES AT MAX. 24" ON CENTER.

2. HANGER WIRES SHALL BE INSTALLED ON MAIN TEES AT MAX. 24" ON CENTER AND MUST BE SECURED WITH MINIMUM OF THREE TURNS, FITTED IN 3" AT EACH END, SEE SECTION B-B ON SHEET 3.

3. SECUROCK SHEATHING MUST BE ATTACHED WITH #8 – 1¼" MODIFIED TRUSS HEAD K LATH SHARP POINT (TYPE S) SCREWS TO MAIN TEES, CROSS TEES AND PERIMETER CHANNEL MOLDING AT MAXIMUM SPACING 8" ON CENTER.

4. PERIMETER CHANNEL SHALL BE ATTACHED TO MAIN STRUCTURE AT 8" O.C. MAX, REFER TO PAGE 4 FOR DETAILS.

5. REFER TO PAGE 5 FOR DIRECT APPLIED EXTERIOR SYSTEM DESCRIPTION.

6. MAIN TEE SPLICE – IF MAIN TEE HAS TO BE SPLICED, THE SPLICE CLIP DGSC-180 MUST BE ATTACHED TO MAIN TEES WITH 2-#8 – ¾" S12 FASTENERS ON EACH END. THE HANGER WIRE AND COMPRESSION POST MUST BE LOCATED WITHIN 6" ON ONE SIDE OF THE SPLICE.

USG

USG CORPORATION
Corporate Innovation Center
700 N. HWY. 45, Libertyville, Illinois

Drywall Suspension System with glass-mat sheathing for exterior applications.

PROD: DWSS-USG	DR. BY ES		APVD. BY
	CH. BY		REV. NO.
PROJ. 32815.3103	SCALE NOT TO SCALE		BY
	DATE 1/26/2010		DATE
SHEET 1 OF 5	DWG. PLAN		

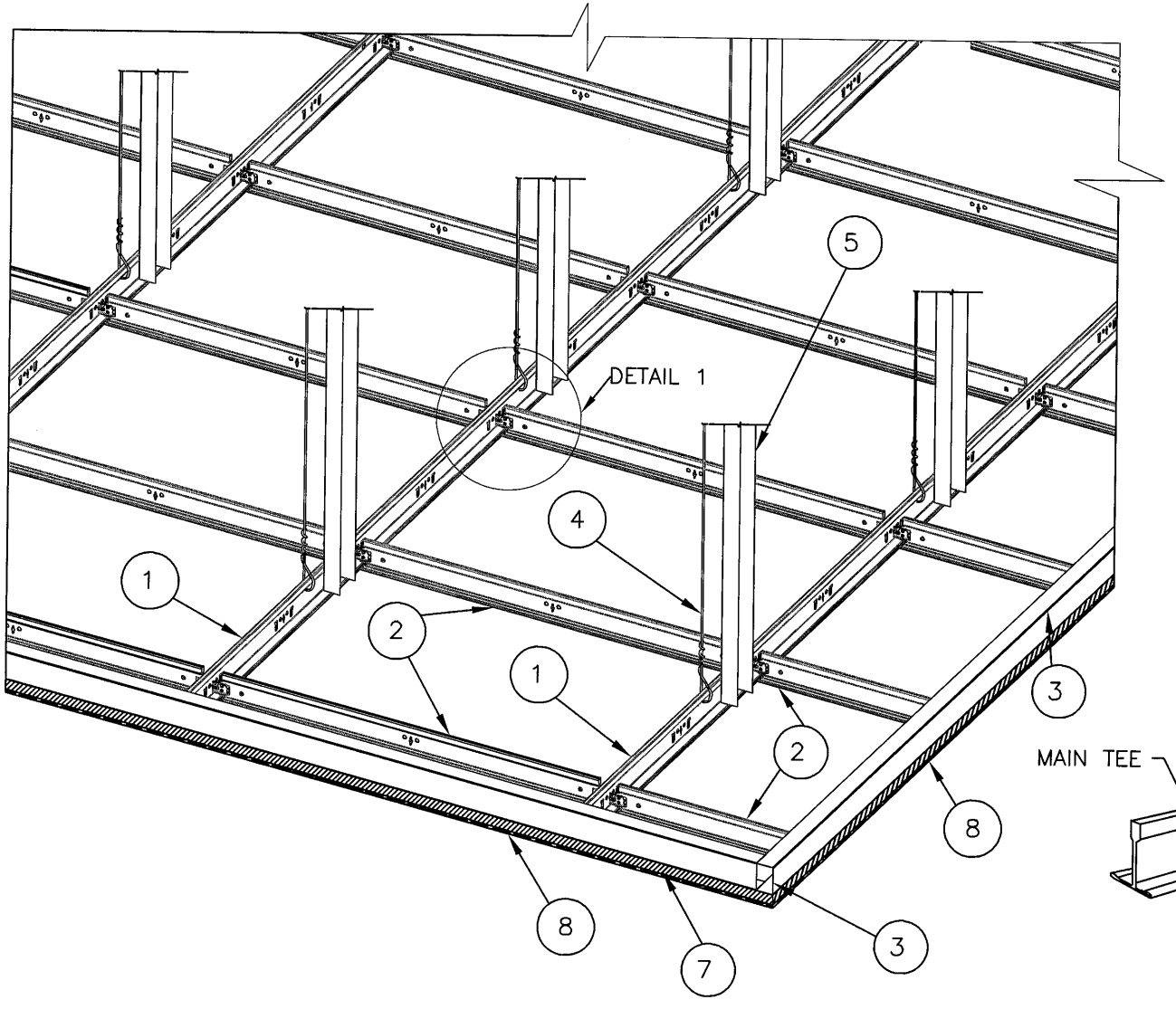

ISOMETRIC VIEW

PEI ENGINEERING SERVICES, INC.
58640 SR 15; GOSHEN, IN 46528
PHONE 574-534-7333
COA 29447

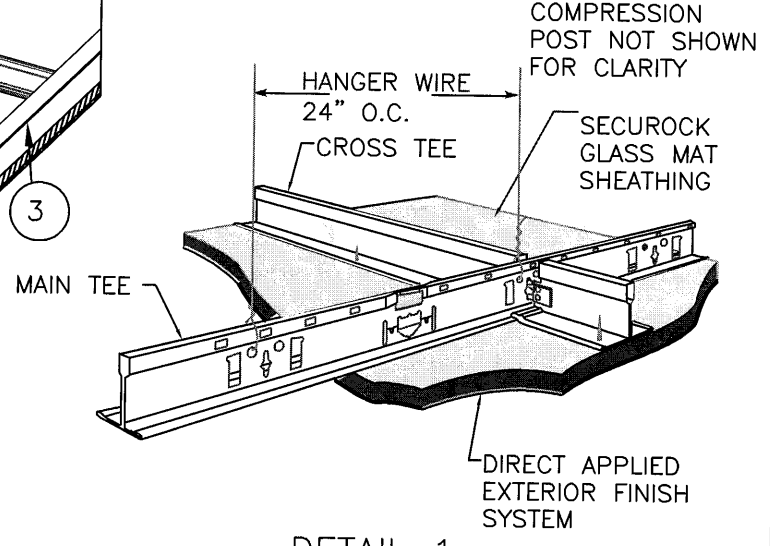

DETAIL 1

Approved as complying with the Florida Building Code
Date 09/08/2010
NOA# 10-0629.02
Miami Dade Product Control Division
By

DESIGN PRESSURE
+75 PSF/−75 PSF

Steven R. Maiuk

JUN 1 6 2010

USG

USG CORPORATION
Corporate Innovation Center
700 N. HWY. 45, Libertyville, Illinois

Drywall Suspension System with glass-mat sheathing for exterior applications.

PROD: DWSS-USG	DR. BY ES	APVD. BY
	CH. BY	REV. NO.
PROJ. 32815.3103	SCALE NOT TO SCALE	BY
	DATE 1/26/2010	DATE
SHEET 2 OF 5	DWG. 3-D VIEW AND DETAILS	

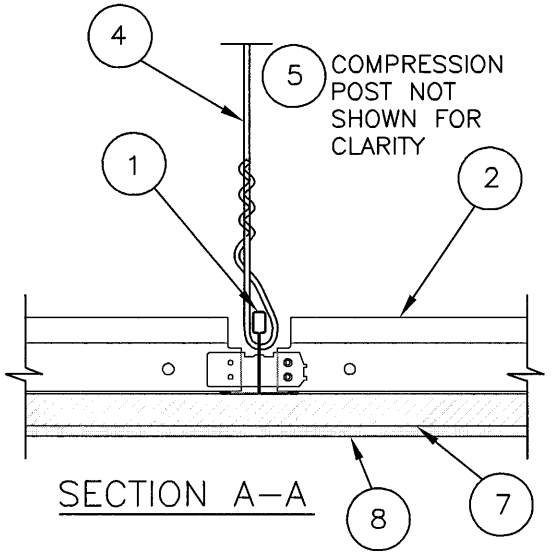

SECTION A–A

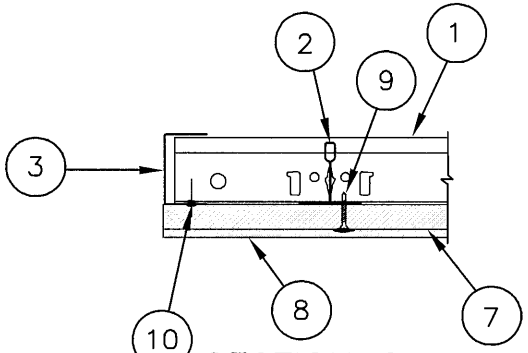

SECTION C–C

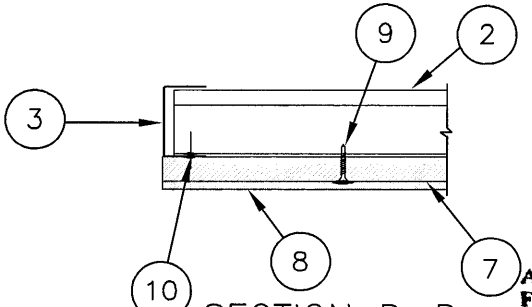

SECTION D–D

DESIGN PRESSURE
+75 PSF/–75 PSF

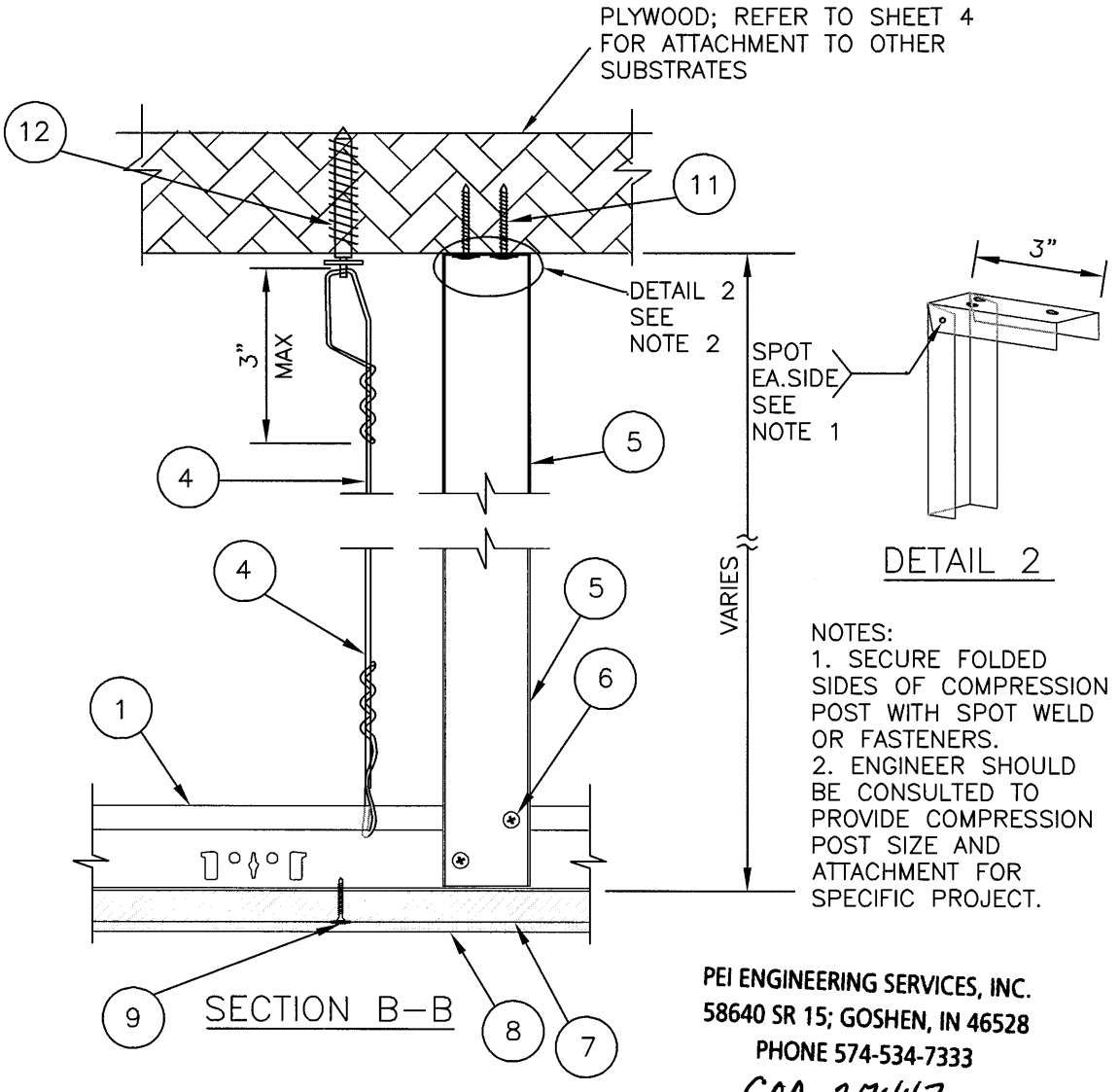

SECTION B–B

DETAIL 2

NOTES:
1. SECURE FOLDED SIDES OF COMPRESSION POST WITH SPOT WELD OR FASTENERS.
2. ENGINEER SHOULD BE CONSULTED TO PROVIDE COMPRESSION POST SIZE AND ATTACHMENT FOR SPECIFIC PROJECT.

PEI ENGINEERING SERVICES, INC.
58640 SR 15; GOSHEN, IN 46528
PHONE 574-534-7333
COA 27447

Steven R. Maurle

Approved as complying with the Florida Building Code
Date 09/08/2010
NOA# 10-0629.02
Miami Dade Product Control Division
By

JUN 1 6 2010

USG

USG CORPORATION
Corporate Innovation Center
700 N. HWY. 45, Libertyville, Illinois

Drywall Suspension System with glass-mat sheathing for exterior applications.

PROD: DWSS-USG	DR. BY ES	APVD. BY	
	CH. BY	REV. NO.	
PROJ. 32815.3103	SCALE NOT TO SCALE	BY	
	DATE 1/26/2010	DATE	
SHEET 3 OF 5	DWG. SECTIONS AND DETAILS		

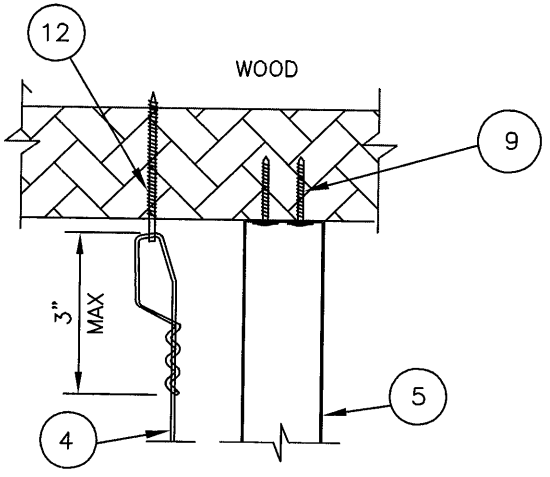

DETAIL 1

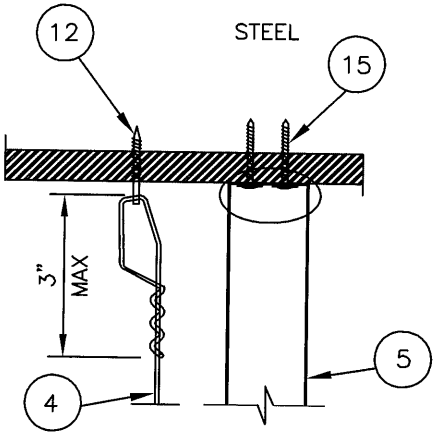

DETAIL 2

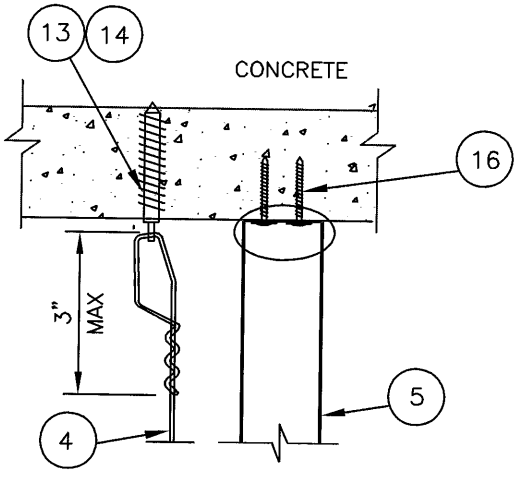

DETAIL 3

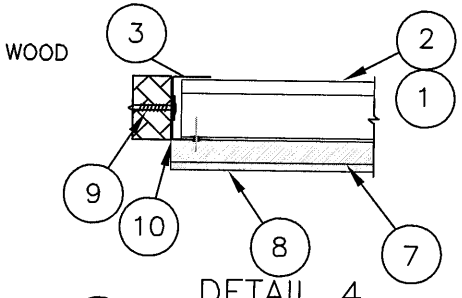

DETAIL 4

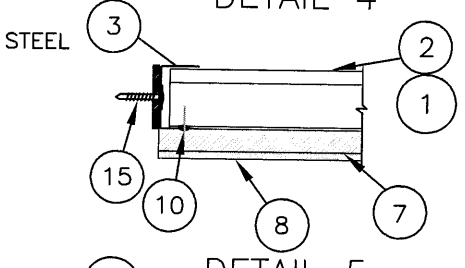

DETAIL 5

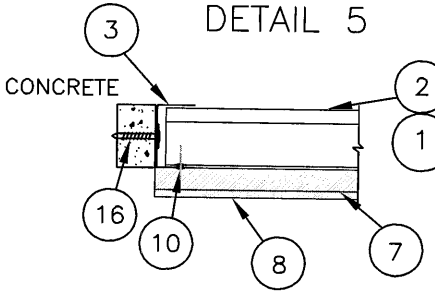

DETAIL 6

ANCHORING NOTES:
UNLESS ANCHORING TO THE MAIN STRUCTURE IS DESIGNED BY ENGINEER OR ARCHITECT OF RECORD, USE DETAILS 1 THROUGH 6 FOR ATTACHMENT.

1. WOOD SUBSTRATE DETAIL 1 & 4
   - HANGER WIRE: USE 1–#10 EYE SCREW OR EQUIVALENT WITH $1\frac{1}{4}$" MINIMUM PENETRATION
   - COMPRESSION POST: USE 3 – #8 SCREWS OR EQUIVALENT WITH $1\frac{1}{4}$" MINIMUM PENETRATION.
   - MOLDING CHANNEL: USE 1–#8 SCREW OR EQUIVALENT WITH $\frac{1}{2}$" MINIMUM PENETRATION AT 8" O.C.
2. STEEL SUBSTRATE, DETAIL 2 & 5
   - HANGER WIRE: USE 1–#10 EYE SCREW OR EQUIVALENT ATTACHED TO MINIMUM 14 GA. STEEL.
   - COMPRESSION POST: USE 3 – #8 SCREWS OR EQUIVALENT ATTACHED TO MINIMUM 18 GA. STEEL.
   - MOLDING CHANNEL: USE 1–#8 SCREW OR EQUIVALENT AT 8" O.C.
3. CONCRETE SUBSTRATE, DETAIL 3 & 6
   - HANGER WIRE: USE 1/4" HILTI HHDCA ANCHOR OR X–CW X–U 27 CEILING WIRE ANCHOR OR EQUIVALENT IN LIGHT OR NORMAL WEIGHT CONCRETE (f'c = 3500 PSI MIN.)
   - COMPRESSION POST: USE 3 –$\frac{3}{16}$" DIA. TAPCON CARBON STEEL OR STAINLESS ANCHOR OR EQUIVALENT WITH 2" MINIMUM EMBEDMENT AND $1\frac{1}{8}$" MIN. EDGE DISTANCE IN 3000 PSI CONCRETE.
   - MOLDING CHANNEL: USE 1– $\frac{3}{16}$" DIA. TAPCON ANCHOR OR EQUIVALENT WITH 1" MINIMUM EMBEDMENT AND 2" MIN. EDGE DISTANCE IN 3000 PSI CONCRETE OR MEDIUM–WEIGHT CMU BLOCKS.

Approved as complying with the Florida Building Code
Date 09/08/2010
NOA# 10-0627.02
Miami Dade Product Control Division
By

Steven R. Maiale

PEI ENGINEERING SERVICES, INC.
58640 SR 15; GOSHEN, IN 46528
PHONE 574-534-7333

JUN 1 6 2010

DESIGN PRESSURE
+75 PSF/–75 PSF

CDA 27447

USG CORPORATION
Corporate Innovation Center
700 N. HWY. 45, Libertyville, Illinois

Drywall Suspension System with glass-mat sheathing for exterior applications.

PROD: DWSS-USG	DR. BY ES	APVD. BY	
	CH. BY	REV. NO.	
PROJ. 32815.3103	SCALE NOT TO SCALE	BY	
	DATE 1/26/2010	DATE	
SHEET 4 OF 5	DWG. ANCHORING DETAILS		

LIST OF MATERIALS

ITEM	DESCRIPTION
1	DGLW26 MAIN TEE BY USG INTERIORS, MIN. G40.
2	DGLW224 CROSS TEE BY USG INTERIORS, MIN. G40.
3	DGCM27 PERIMETER CHANNEL MOLDING BY USG INTERIORS, MIN. G40.
4	12 GAUGE HANGER WIRE, MINIMUM 3 WRAPS.
5	COMPRESSION POST, MIN. 26 GAUGE THICKNESS; SECTION PROPERTIES AND ATTACHMENT TO BE DETERMINED BY ENGINEER OF RECORD TO MEET SITE SPECIFIC CONDITIONS, INCLUDING BUT NOT LIMITED TO PLENUM HEIGHT AND SUPPORTING STRUCTURE MATERIAL.
6	MIN. #8–3/4" TYPE S12 SHEET METAL SCREW.
7	MIN. 1/2" USG SECUROCK GLASS MAT SHEATHING.
8	DIRECT APPLIED EXTERIOR FINISH SYSTEM – SEE NOTE 1.
9	MIN. #8–1¼" MODIFIED TRUSS HEAD K LATH SHARP POINT (TYPE S) SCREW.
10	1/8" RIVET, ONE PER TEE TO PERIMETER CHANNEL MOLDING CONNECTION.
11	3 – #8–1¼" TYPE S MODIFIED TRUSS HEAD K LATH SCREW.
12	#10 EYE SCREW OR EQUIVALENT.
13	HILTI X–CW X–U–27 FASTENER
14	HILTI HHDCA CEILING HANGER WITH 1–1/4" EMBEDMENT.
15	#8 – 1¼" SCREW.
16	3/16" CARBON STEEL OR STAINLESS STEEL TAPCON ANCHOR.

NOTES:
1. BELOW ARE 4 OPTIONS FOR DIRECT APPLIED EXTERIOR FINISH SYSTEM. ALL PRODUCTS SHALL BE APPLIED PER MANUFACTURER INSTALLATION INSTRUCTIONS.

OPTION 1: DRYVIT
BASE COAT: PRIMUS DM
MESH: STANDARD 4.3 oz. REINFORCING MESH
FINISH COAT: DRYVIT DPR FINISH

OPTION 2: PAREX
BASE COAT: PAREX 121
MESH: PAREX MESH 355
FINISH: PAREX DPR STANDARD FINISH

OPTION 3: SENERGY
BASE COAT : SENERGY ALPHA DRY BASE COAT
MESH: FLEXGUARD 4 MESH
FINISH: SENERFLEX FINISH

OPTION 4: STO
BASE COAT: STO PRIMER/ADHESIVE–B
MESH: STO MESH 4.5 oz.
FINISH: STO ESSENCE DPR FINISH

Approved as complying with the Florida Building Code
Date 09/08/2010
NOA# 10-0629.02
Miami Dade Product Control Division
By

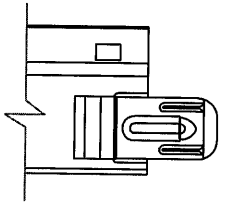

TYPICAL MAIN TEE SPLICE CLIP

PEI ENGINEERING SERVICES, INC.
58640 SR 15; GOSHEN, IN 46528
PHONE 574-534-7333
COA 27447

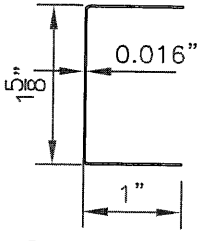

DGCM27 DRYWALL PERIMETER CHANNEL MOLDING AND COMPRESSION POST

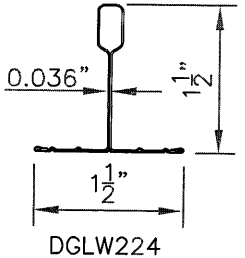

DGLW224 FIRE RATED CROSS TEE

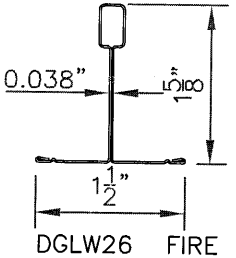

DGLW26 FIRE RATED MAIN TEE

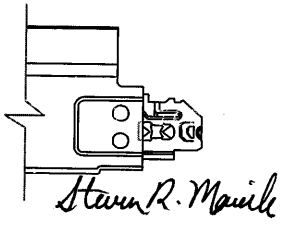

TYPICAL CROSS TEE CLIP

JUN 16 2010

USG

USG CORPORATION
Corporate Innovation Center
700 N. HWY. 45, Libertyville, Illinois

Drywall Suspension System with glass-mat sheathing for exterior application.

PROD: DWSS-USG	DR. BY ES	APVD. BY
	CH. BY	REV. NO.
PROJ. 32815.3103	SCALE NOT TO SCALE.	BY
	DATE 1/26/2010	DATE
SHEET 5 OF 5	DWG. LIST OF MATERIALS AND SYSTEM COMPONENTS	