MIAMI-DADE COUNTY
BUILDING CODE COMPLIANCE OFFICE (BCCO)
PRODUCT CONTROL DIVISION

MIAMI-DADE COUNTY, FLORIDA
METRO-DADE FLAGLER BUILDING

140 WEST FLAGLER STREET, SUITE 1603
MIAMI, FLORIDA 33130-1563
(305) 375-2901 FAX (305) 375-2908
www.buildingcodeonline.com

NOTICE OF ACCEPTANCE (NOA)

Crimsafe North America LLC
P. O. Box 2440
Eaton Park, Florida 33840-2440

SCOPE:
This NOA is being issued under the applicable rules and regulations governing the use of construction materials. The documentation submitted has been reviewed by Miami-Dade County Product Control Division and accepted by the Board of Rules and Appeals (BORA) to be used in Miami Dade County and other areas where allowed by the Authority Having Jurisdiction (AHJ).

This NOA shall not be valid after the expiration date stated below. The Miami-Dade County Product Control Division (In Miami Dade County) and/or the AHJ (in areas other than Miami Dade County) reserve the right to have this product or material tested for quality assurance purposes. If this product or material fails to perform in the accepted manner, the manufacturer will incur the expense of such testing and the AHJ may immediately revoke, modify, or suspend the use of such product or material within their jurisdiction. BORA reserves the right to revoke this acceptance, if it is determined by Miami-Dade County Product Control Division that this product or material fails to meet the requirements of the applicable building code.

This product is approved as described herein, and has been designed to comply with the High Velocity Hurricane Zone of the Florida Building Code.

DESCRIPTION: Hinged Aluminum Framed with Stainless Steel Screen Door

APPROVAL DOCUMENT: Drawing titled "Hinged Door Hurricane Screen", prepared by Crimsafe North America LLC, dated September 24, 2010, sheets 1 through 8 of 8, signed and sealed by Robert L. Clark, P.E., on October 17, 2010, bearing the Miami-Dade County Product Control Approval stamp with the Notice of Acceptance number and the approval date by the Miami-Dade County Product Control Division.

MISSILE IMPACT RATING: Large and Small Missile Impact Resistant

LABELING: A permanent label with the manufacturer's name or logo, Lakeland, Florida and the following statement: "Miami-Dade County Product Control Approved", unless otherwise noted herein.

RENEWAL of this NOA shall be considered after a renewal application has been filed and there has been no change in the applicable building code negatively affecting the performance of this product.

TERMINATION of this NOA will occur after the expiration date or if there has been a revision or change in the materials, use, and/or manufacture of the product or process. Misuse of this NOA as an endorsement of any product, for sales, advertising or any other purposes shall automatically terminate this NOA. Failure to comply with any section of this NOA shall be cause for termination and removal of NOA.

ADVERTISEMENT: The NOA number preceded by the words Miami-Dade County, Florida, and followed by the expiration date may be displayed in advertising literature. If any portion of the NOA is displayed, then it shall be done in its entirety.

INSPECTION: A copy of this entire NOA shall be provided to the user by the manufacturer or its distributors and shall be available for inspection at the job site at the request of the Building Official.

This NOA consists of this page 1, evidence submitted page E-1 as well as approval document mentioned above. The submitted documentation was reviewed by **Helmy A. Makar, P.E., M.S.**

MIAMI-DADE COUNTY APPROVED

Helmy A. Makar
10/20/2010

NOA No. 10-0706.05
Expiration Date: 10/20/2015
Approval Date: 10/20/2010

Crimsafe North America LLC

NOTICE OF ACCEPTANCE: EVIDENCE SUBMITTED

A. DRAWINGS

1. *Drawing titled "Hinged Door Hurricane Screen", prepared by Crimsafe North America LLC, dated September 24, 2010, sheets 1 through 8 of 8, signed and sealed by Robert L. Clark, P.E., on October 17, 2010.*

B. TESTS

1. *Test report on Large Missile Impact Test, Cyclic Wind Pressure Test, and Uniform Static Air Pressure Test of a Hinged Aluminum framed with stainless steel mesh screen Door, prepared by Architectural Testing, Report No. 98889.01-401-18, dated May 06, 2010, signed and sealed by Joseph A. Reed, P.E.*
2. *Test report on Large Missile Impact Test, Cyclic Wind Pressure Test, and Uniform Static Air Pressure Test of a Hinged Aluminum framed with stainless steel mesh screen Door, prepared by Architectural Testing, Report No. 98889.03-401-18, dated August 09, 2010, signed and sealed by Joseph A. Reed, P.E.*

C. CALCULATIONS

1. *Calculation prepared by Robert L. Clark, P.E., dated June 29, 2010, 4 pages, signed and sealed by Robert L. Clark, P.E.*

D. QUALITY ASSURANCE

1. *By Miami-Dade County Building Code Compliance Office.*

E. MATERIAL CERTIFICATIONS

1. *None.*

F. STATEMENTS

1. *Letter prepared by Robert L. Clark, P.E., dated June 29, 2010, signed & sealed by Robert L. Clark, P.E., stating that he has no financial involvement with architectural Testing Lab and the product meets the requirements of the 2007 Florida building Code with the 2009 revision.*

Helmy A. Makar, P.E., M.S.
Senior Product Control Examiner
NOA No. 10-0706.05
Expiration Date: 10/20/2015
Approval Date: 10/20/2010

HINGED DOOR HURRICANE SCREEN

MAXIMUM ALLOWABLE DESIGN PRESSURES:

+63.5 PSF

−63.5 PSF

MIN SEPERATION FROM GLAZING:
MIAMI DADE COUNTY: 3.25"

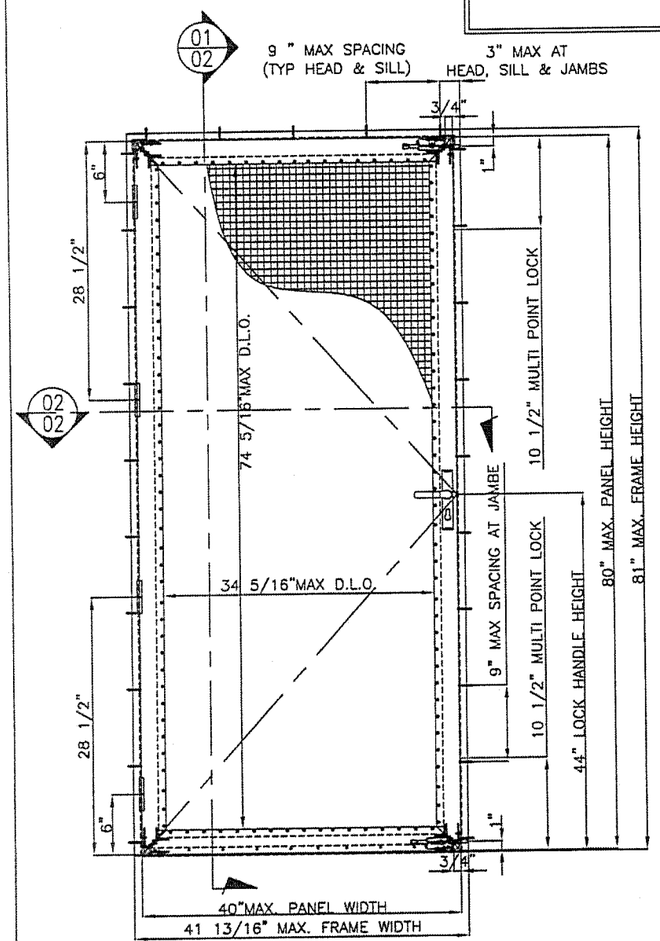

01/01 TYPICAL ELEVATION
SCALE EXTER ELEV

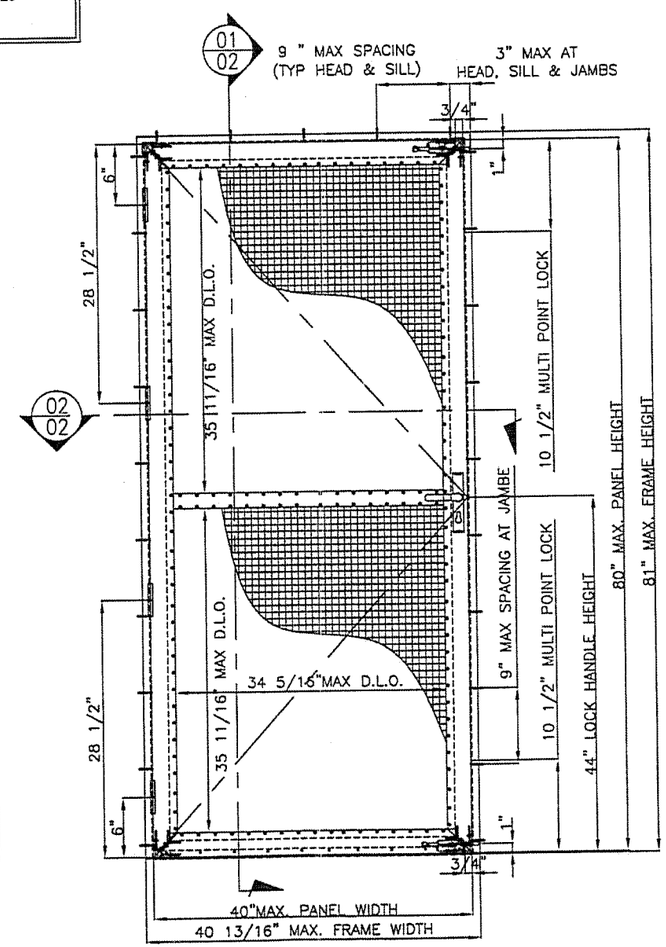

01/01 TYPICAL ELEVATION WITH MIDRAIL
SCALE EXTER ELEV

GENERAL NOTES :

1. THE DOOR SCREEN SYSTEM DESCRIBED HEREIN HAS BEEN DESIGNED AND TESTED IN COMPLIANCE WITH THE 2007 FLORIDA BUILDING CODE WITH 2009 SUPPLEMENTS AND TEST PROTOCOLS TAS 201, 202 & 203. THIS SYSTEM MAY BE USED WITHIN THE HIGH VELOCITY HURRICANE ZONE (HVHZ) AS WELL AS THROUGHOUT THE STATE OF FLORIDA.

2. POSITIVE AND NEGATIVE DESIGN PRESSURES SHALL BE CALCULATED IN ACCORDANCE WITH THE GOVERNING CODE.

3. INSTALLATION OF ALL UNITS SHALL ALLOW FOR RESPECTIVE MINIMUM SEPARATION FROM GLAZING AS NOTED ON THIS PAGE. REF SECTION DETAILS FOR DESCRIPTION OF THIS DISTANCE.

4. MULTIPLE UNITS SHALL BE INSTALLED USING APPROVED ALUMINIUM STRUCTURAL FRAME OF ALLOY 6063-T5(MIN). FRAME SHALL MEET ALL APPLICABLE IMPACT & WINDLOAD CRITERIA, AND SHALL BE INSTALLED PER RESPECTIVE PRODUCT APPROVAL DOCUMENTATION.

5. THE SYSTEM DETAILED HEREIN IS GENERIC AND DOES NOT PROVIDE INFORMATION FOR A SPECIFIC SITE. FOR SITE CONDITIONS DEFFERENT FROM THE CONDITIONS DETAILED HEREIN, A PROFESSIONAL ENGINEER OR REGISTERED ARCHITECT SHALL PREPARE SITE SPECIFIC DOCUMENTS.

6. PERMIT HOLDER SHALL VERIFY THE ADEQUACY OF THE EXISTING STRUCTURE TO WITHSTAND SUPERIMPOSED LOADS.

7. PERIMETER SQUARE TUBE MAY BE ANCHORED TO VERTICAL FACE("FACE MOUNT") OF HOST STRUCTURE.

8. SYSTEM MAY BE INSTALLED VERTICALLY OR HORIZONTALLY (AS SHOWN IN THIS PAGE).

SYSTEM NOTES :

1. FRAME & PANEL CONSTRUCTION: EXTRUDED ALUMINIUM FRAME CORNERS ARE MITERED, AND SCREWED.

2. FRAME DOES CONTAIN MULTI POINT LOCK HARDWARE.

3. MESH CONSTRUCTION: STAINLESS STEEL GRADE MESH IS MADE UP OF 304 "HIGH TENSILE" STAINLESS STEEL, WITH ø 0.035" STRANDS ARRANGED 10 STRANDS BY 10 STRANDS PER SQUARE INCH THE MESH INFORMATION IS DESCRIBED IN SHEET 5.

4. THE MESH IS ATTACHED ONTO THE MAIN FRAME BY A REMOVABLE ALUMINIUM CLAMP WITH TAMPER RESISTANT SECURITY HEAD SCREW.

ALL DIMENSION IN INCHES

Manufacturer:

Crimsafe North America
PO Box 2440 Eaton Park
FL 33840-2440
Phone: +1 863 510 0188
Fax: +1 863 665 0485

Product:
HINGED DOOR HURRICANE SCREEN

Engineering:
Robert J. [signature]
10/17/10
39712

Rev.	Rev. Description
26/8/10	Adding face mount drawing into one drawing together with the reveal fit

Date: 24 Sep 2010
Scale: NA
Design by: CRIMSAFE

PRODUCT CONTROL DIVISION
Approved as complying with the Florida Building Code
Date 10/20/2010
NOAS 10-0706.05
Miami Dade Product Control Division
By [signature]

Drawing Number
MD-301-STD

Sheet
01 of 08

HINGED DOOR HURRICANE SCREEN

MAXIMUM ALLOWABLE DESIGN PRESSURES:

+63.5 PSF

−63.5 PSF

MIN SEPERATION FROM GLAZING:

MIAMI DADE COUNTY: 4.81"

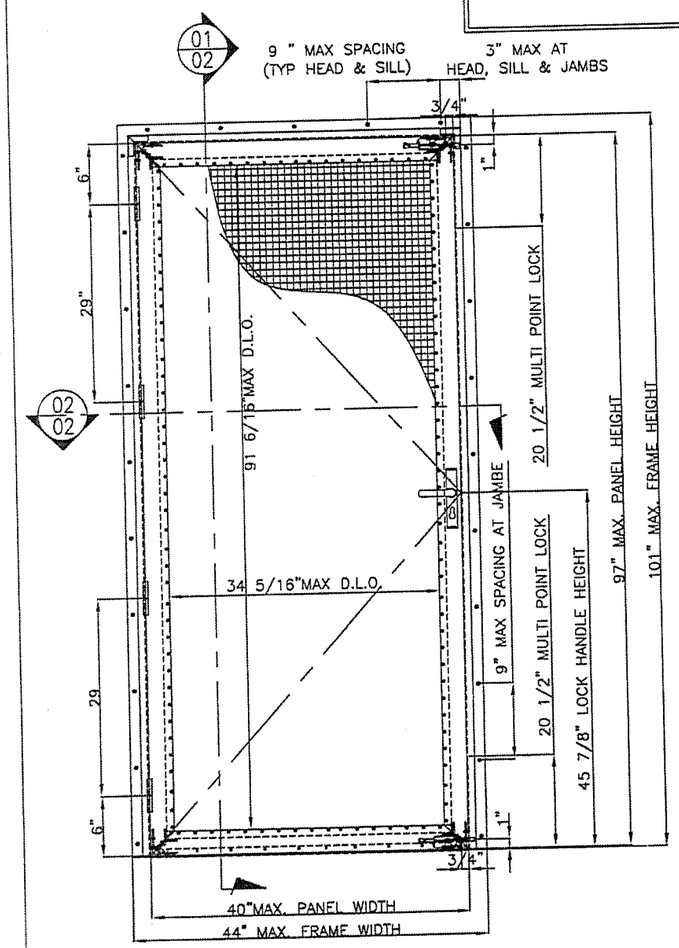

01/01 TYPICAL ELEVATION

SCALE EXTER ELEV

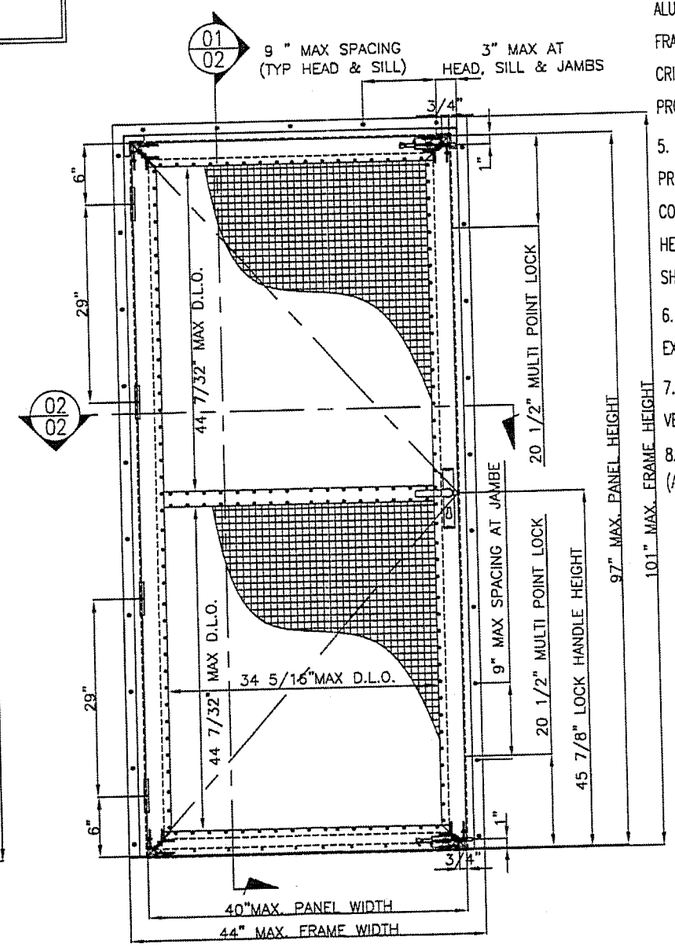

01/01 TYPICAL ELEVATION WITH MIDRAIL

SCALE EXTER ELEV

GENERAL NOTES :

1. THE DOOR SCREEN SYSTEM DESCRIBED HEREIN HAS BEEN DESIGNED AND TESTED IN COMPLIANCE WITH THE 2007 FLORIDA BUILDING CODE WITH 2009 SUPPLEMENTS AND TEST PROTOCOLS TAS 201, 202 & 203. THIS SYSTEM MAY BE USED WITHIN THE HIGH VELOCITY HURRICANE ZONE (HVHZ) AS WELL AS THROUGHOUT THE STATE OF FLORIDA.
2. POSITIVE AND NEGATIVE DESIGN PRESSURES SHALL BE CALCULATED IN ACCORDANCE WITH THE GOVERNING CODE.
3. INSTALLATION OF ALL UNITS SHALL ALLOW FOR RESPECTIVE MINIMUM SEPARATION FROM GLAZING AS NOTED ON THIS PAGE. REF SECTION DETAILS FOR DESCRIPTION OF THIS DISTANCE.
4. MULTIPLE UNITS SHALL BE INSTALLED USING APPROVED ALUMINIUM STRUCTURAL FRAME OF ALLOY 6063-T5(MIN). FRAME SHALL MEET ALL APPLICABLE IMPACT & WINDLOAD CRITERIA, AND SHALL BE INSTALLED PER RESPECTIVE PRODUCT APPROVAL DOCUMENTATION.
5. THE SYSTEM DETAILED HEREIN IS GENERIC AND DOES NOT PROVIDE INFORMATION FOR A SPECIFIC SITE. FOR SITE CONDITIONS DEFFERENT FROM THE CONDITIONS DETAILED HEREIN, A PROFESSIONAL ENGINEER OR REGISTERED ARCHITECT SHALL PREPARE SITE SPECIFIC DOCUMENTS.
6. PERMIT HOLDER SHALL VERIFY THE ADEQUACY OF THE EXISTING STRUCTURE TO WITHSTAND SUPERIMPOSED LOADS.
7. PERIMETER SQUARE TUBE MAY BE ANCHORED TO VERTICAL FACE("FACE MOUNT") OF HOST STRUCTURE.
8. SYSTEM MAY BE INSTALLED VERTICALLY OR HORIZONTALLY (AS SHOWN IN THIS PAGE).

SYSTEM NOTES :

1. FRAME & PANEL CONSTRUCTION: EXTRUDED ALUMINIUM FRAME CORNERS ARE MITERED, AND SCREWED.
2. FRAME DOES CONTAIN MULTI POINT LOCK HARDWARE.
3. MESH CONSTRUCTION: STAINLESS STEEL GRADE MESH IS MADE UP OF 304 "HIGH TENSILE" STAINLESS STEEL, WITH ø 0.035" STRANDS ARRANGED 10 STRANDS BY 10 STRANDS PER SQUARE INCH THE MESH INFORMATION IS DESCRIBED IN SHEET 5.
4. THE MESH IS ATTACHED ONTO THE MAIN FRAME BY A REMOVABLE ALUMINIUM CLAMP WITH TAMPER RESISTANT SECURITY HEAD SCREW.

ALL DIMENSION IN INCHES

Manufacturer:

Crimsafe North America
PO Box 2440 Eaton Park
FL 33840-2440
Phone: +1 863 510 0188
Fax: +1 863 665 0485

Product:

HINGED DOOR HURRICANE SCREEN

Engineering:

Robert J. [illegible]
10/17/10
#39712

Rev.	Rev. Description
26/8/10	Adding face mount drawing into one drawing together with the reveal fit

Date: 24 Sep 2010
Scale: NA
Design by: CRIMSAFE

PRODUCT CONTROL DIVISION
Approved as complying with the Florida Building Code
Date 10/20/2010
NOA# 10-0706.05
Miami Dade Product Control Division
By [illegible]

Drawing Number
MD-301-STD

Sheet
02 of 08

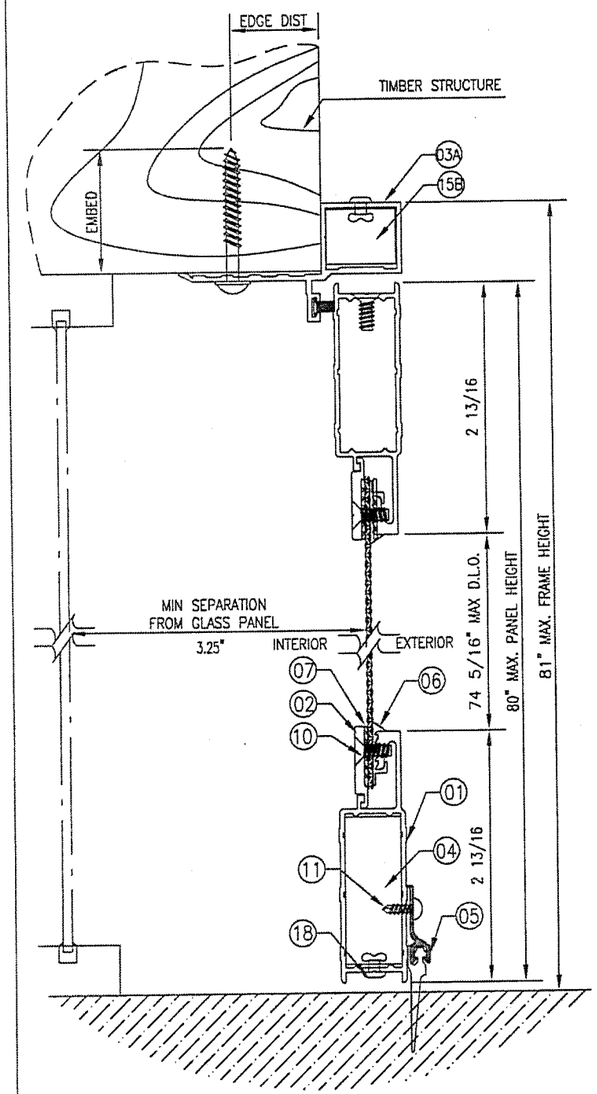

ATTACHMENT TO WOOD

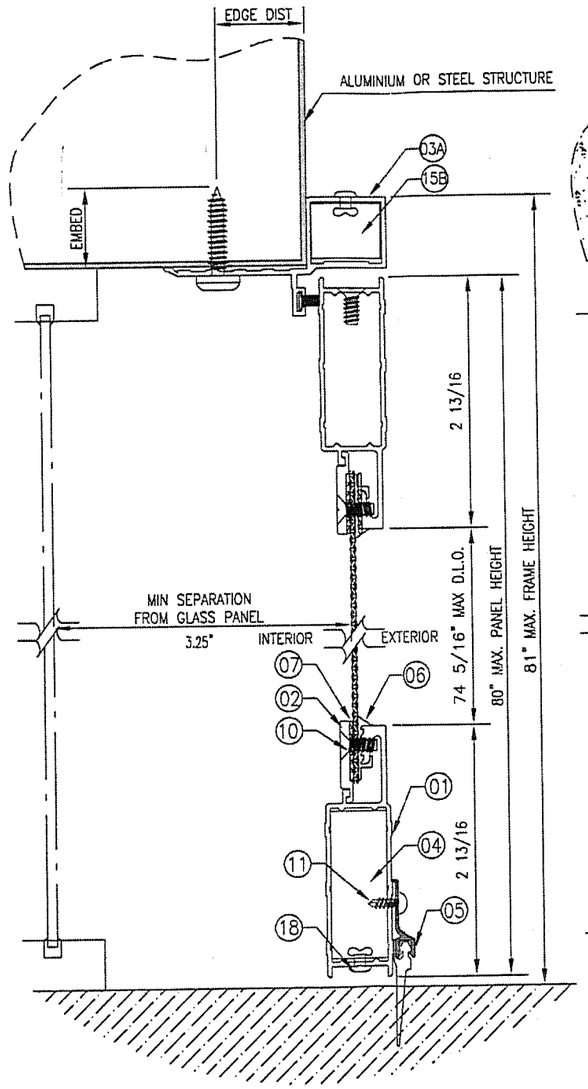

ATTACHMENT TO ALUMINIUM OR STEEL

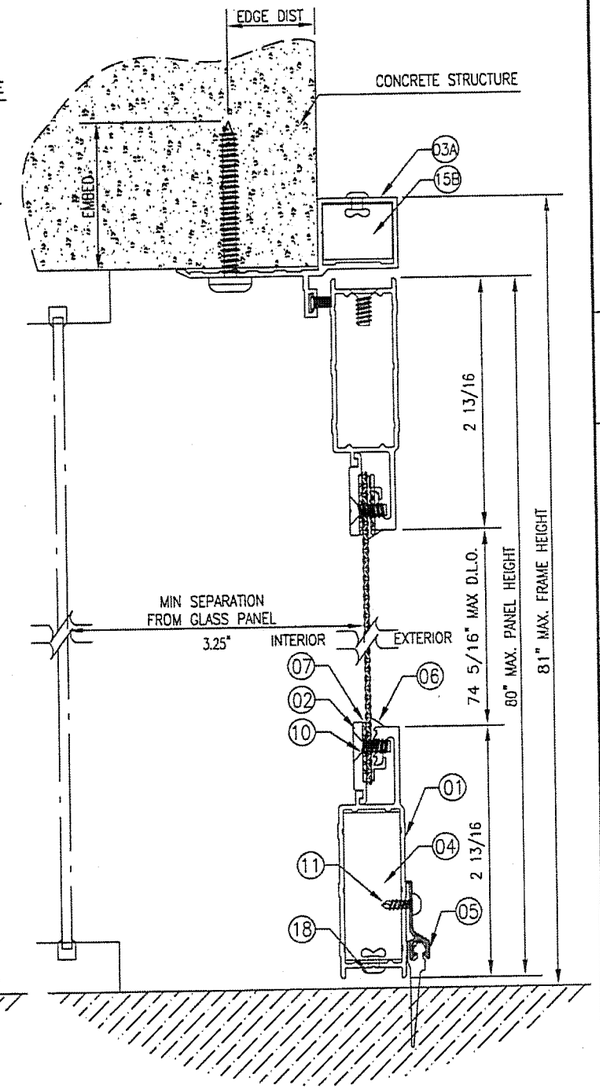

ATTACHMENT TO HOLLOW BLOCK OR CONCRETE

01 VERTICAL CROSS SECTION
02 SIDE HURRICANE STANDARD DOOR

ANCHOR TABLE:

TYPE	STRUCTURE	MIN EMBD.
1/4"	CONCRETE OR HOLLOW BLOCK WITH MIN EDGE DISTANCE x 2 1/2"	1 3/8"
#12 SELF TAPPING SHEET METAL SCREW	ALUMINIUM OR STEEL BLOCK WITH MIN EDGE DISTANCE x 1 3/8"	3/4"
#10	WOOD /TIMBER WITH MIN EDGE DISTANCE x 1 3/8"	1 3/8"

NOTE: INSTALLATION SHOWN IS FOR WOOD FRAME CONCRETE, CMU AND ALUMINIUM, STEEL TUBE AS SIMILAR

ALL DIMENSION IN INCHES

Manufacturer:

Crimsafe North America
PO Box 2440 Eaton Park
FL 33840-2440
Phone: +1 863 510 0188
Fax: +1 863 665 0485

Product:

HINGED DOOR HURRICANE SCREEN

Engineering:

Robert J. Chu
10/17/10
#39712

Rev.	Rev. Description
26/8/10	Adding face mount drawing into one drawing together with the reveal fit

Date: 24 Sep 2010
Scale: NA
Design by: CRIMSAFE

PRODUCT CONTROL DIVISION
Approved as complying with the Florida Building Code
Date 10/20/2010
NOAA 10-0706.05
Miami Dade Product Control Division
By Helmy A. Mahon

Drawing Number
MD-301-STD

Sheet
03 of 08

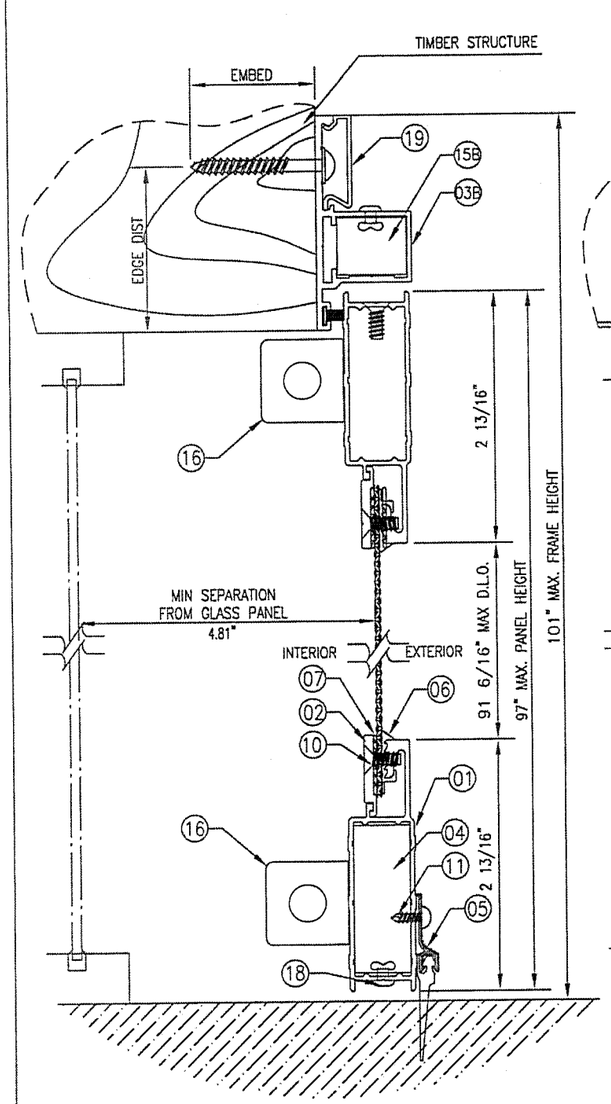

ATTACHMENT TO WOOD

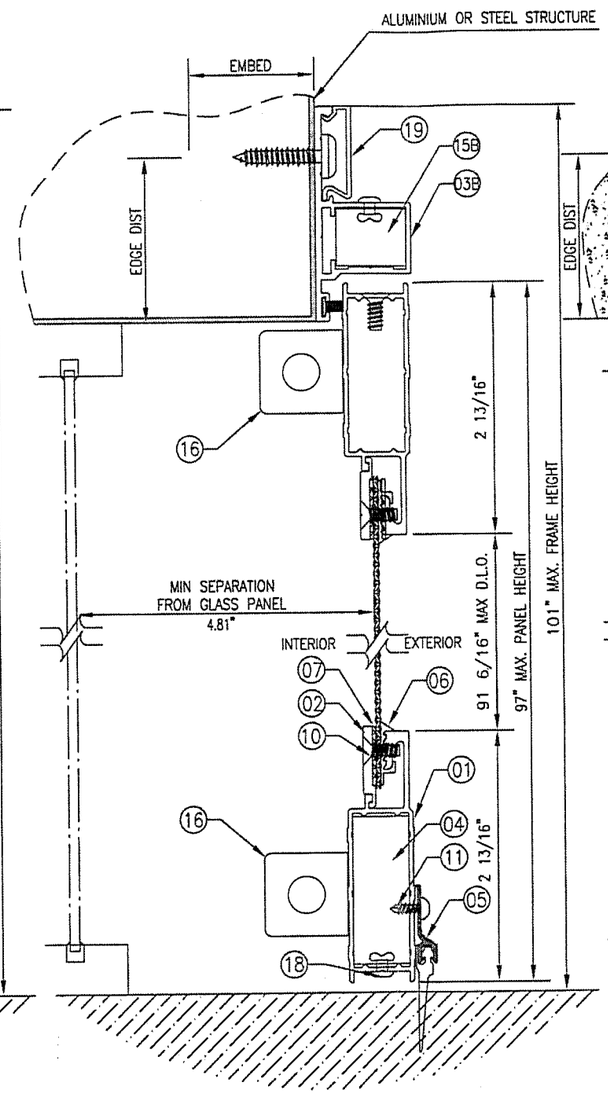

ATTACHMENT TO ALUMINIUM OR STEEL

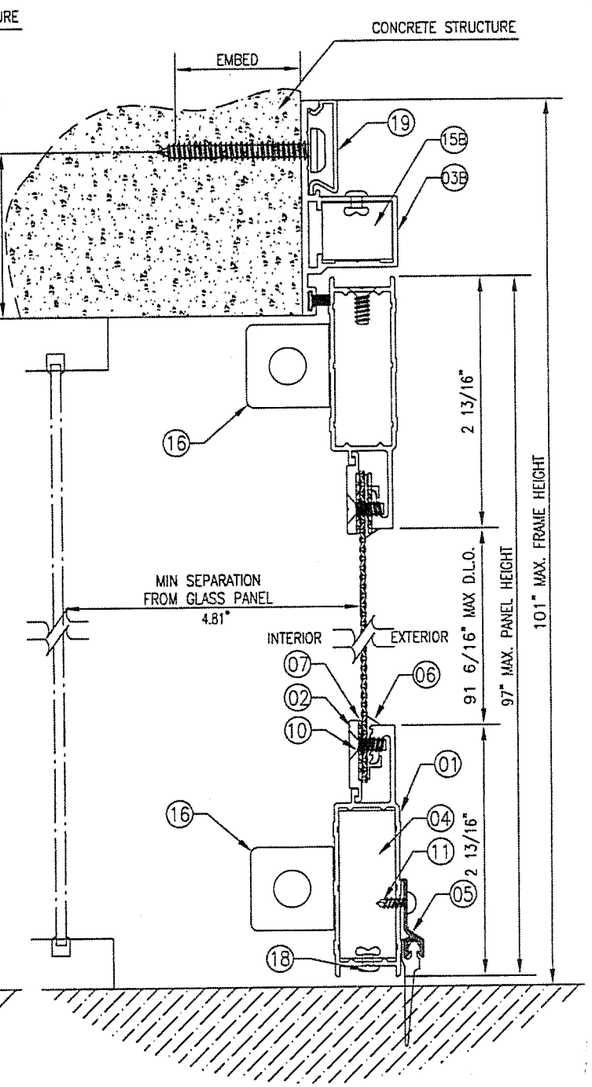

ATTACHMENT TO HOLLOW BLOCK OR CONCRETE

01 VERTICAL CROSS SECTION
02 SIDE HURRICANE STANDARD DOOR

ANCHOR TABLE:

TYPE	STRUCTURE	MIN EMBD.
1/4"	CONCRETE OR HOLLOW BLOCK WITH MIN EDGE DISTANCE x 2 1/2"	1 3/8"
#12 SELF TAPPING SHEET METAL SCREW	ALUMINIUM OR STEEL BLOCK WITH MIN EDGE DISTANCE x 1 3/8"	3/4"
#10	WOOD /TIMBER WITH MIN EDGE DISTANCE x 1 3/8"	1 3/8"

NOTE: INSTALLATION SHOWN IS FOR WOOD FRAME
CONCRETE, CMU AND ALUMINIUM, STEEL TUBE AS SIMILAR

ALL DIMENSION IN INCHES

Manufacturer:

Crimsafe North America
PO Box 2440 Eaton Park
FL 33840-2440
Phone: +1 863 510 0188
Fax: +1 863 665 0485

Product:

HINGED DOOR HURRICANE SCREEN

Engineering:

10/17/10
#3972

Rev.	Rev. Description
26/8/10	Adding face mount drawing into one drawing together with the reveal fit

Date: 30 June 2010
Scale: NA
Design by: CRIMSAFE

PRODUCT CONTROL DIVISION
Approved as complying with the Florida Building Code
Date 10/20/2010
NOA# 10-0706.05
Miami-Dade Product Control Division
By

Drawing Number
MD-301-STD

Sheet
04 of 08

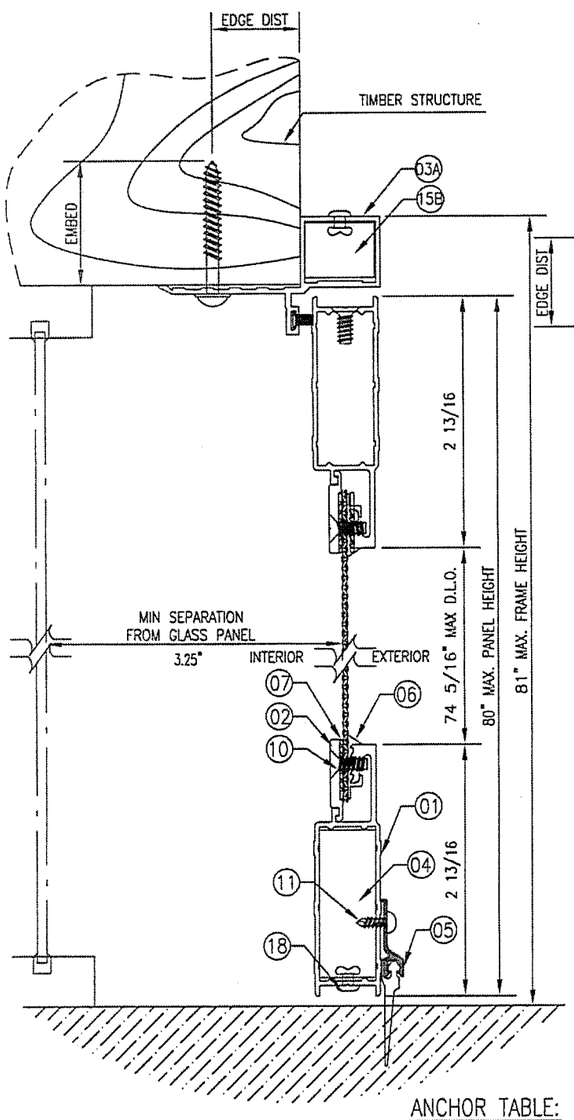

01/02 VERTICAL CROSS SECTION
SIDE HURRICANE STANDARD DOOR

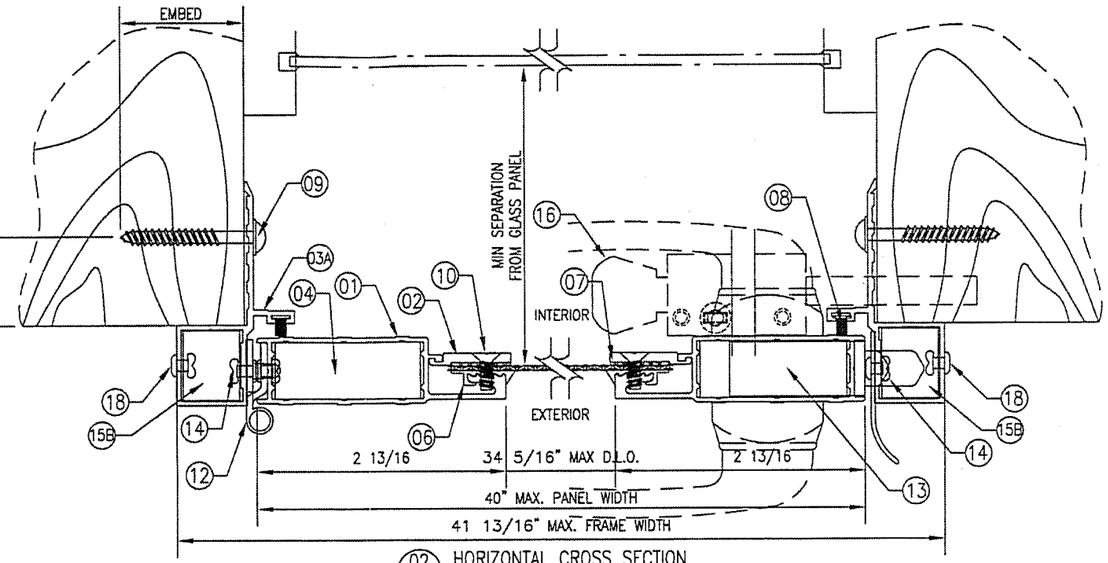

02/02 HORIZONTAL CROSS SECTION
SIDE HURRICANE STANDARD DOOR

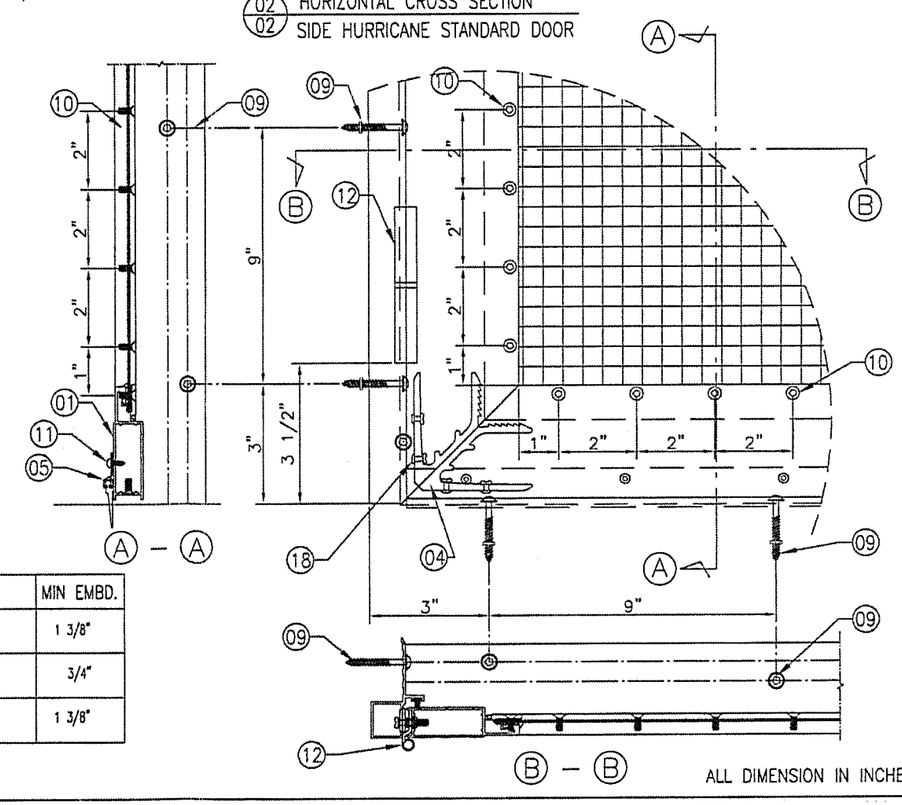

ANCHOR TABLE:

TYPE	STRUCTURE	MIN EMBD.
1/4"	CONCRETE OR HOLLOW BLOCK WITH MIN EDGE DISTANCE x 2 1/2"	1 3/8"
#12 SELF TAPPING SHEET METAL SCREW	ALUMINIUM OR STEEL BLOCK WITH MIN EDGE DISTANCE x 1 3/8"	3/4"
#10	WOOD /TIMBER WITH MIN EDGE DISTANCE x 1 3/8"	1 3/8"

NOTE: INSTALLATION SHOWN IS FOR WOOD FRAME
CONCRETE, CMU AND ALUMINIUM, STEEL TUBE AS SIMILAR

ALL DIMENSION IN INCHES

Manufacturer:

Crimsafe North America
PO Box 2440 Eaton Park
FL 33840-2440
Phone: +1 863 510 0188
Fax: +1 863 665 0485

Product:

HINGED DOOR HURRICANE SCREEN

Engineering:

10/19/10
#39712

Rev.	Rev. Description
26/8/10	Adding face mount drawing into one drawing together with the reveal fit

Date: 24 Sep 2010
Scale: NA
Design by: CRIMSAFE

PRODUCT CONTROL DIVISION
Approved as complying with the Florida Building Code
Date 10/20/2010
NOA# 10-0706.05
Miami-Dade Product Control Division
By

Drawing Number
MD-301-STD

Sheet
05 of 08

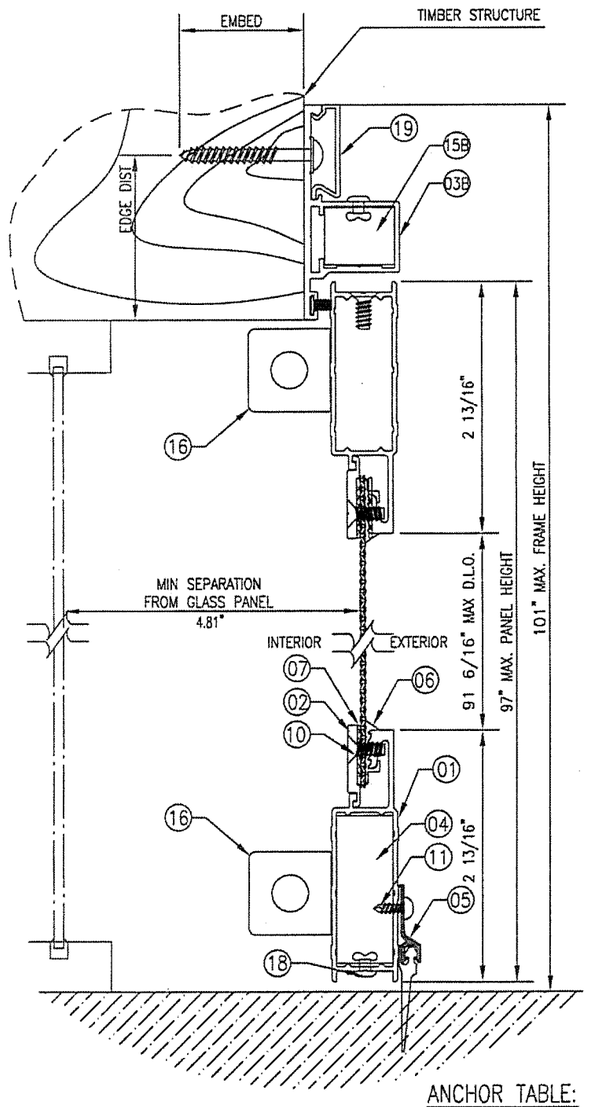

01/02 VERTICAL CROSS SECTION
SIDE HURRICANE STANDARD DOOR

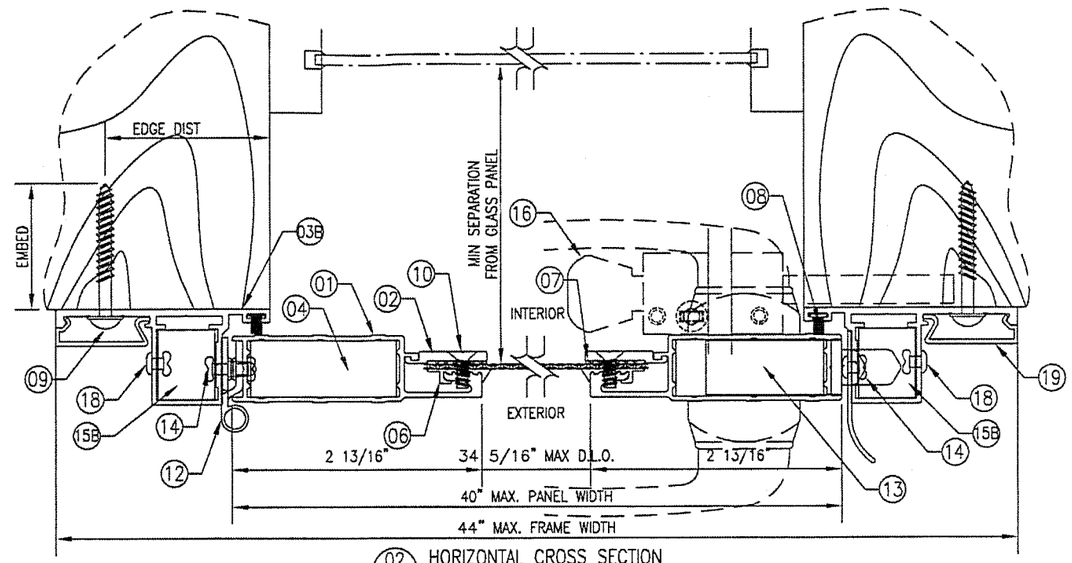

02/02 HORIZONTAL CROSS SECTION
SIDE HURRICANE STANDARD DOOR

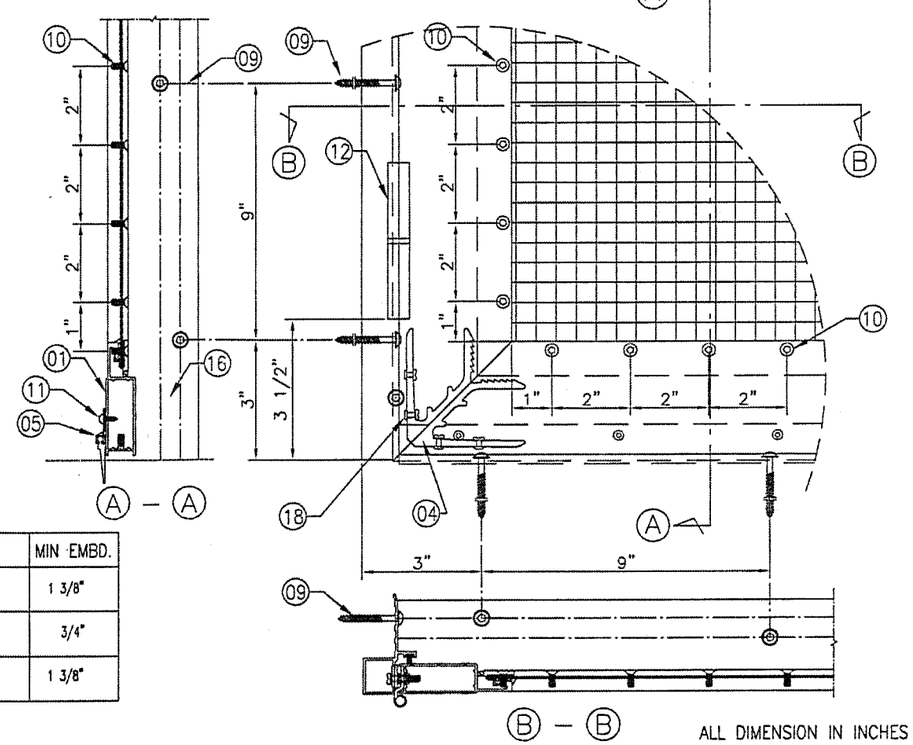

ANCHOR TABLE:

TYPE	STRUCTURE	MIN EMBD.
1/4"	CONCRETE OR HOLLOW BLOCK WITH MIN EDGE DISTANCE x 2 1/2"	1 3/8"
#12 SELF TAPPING SHEET METAL SCREW	ALUMINIUM OR STEEL BLOCK WITH MIN EDGE DISTANCE x 1 3/8"	3/4"
#10	WOOD /TIMBER WITH MIN EDGE DISTANCE x 1 3/8"	1 3/8"

NOTE: INSTALLATION SHOWN IS FOR WOOD FRAME
CONCRETE, CMU AND ALUMINIUM, STEEL TUBE AS SIMILAR

ALL DIMENSION IN INCHES

Manufacturer:

Crimsafe North America
PO Box 2440 Eaton Park
FL 33840-2440
Phone: +1 863 510 0188
Fax: +1 863 665 0485

Product:
HINGED DOOR HURRICANE SCREEN

Engineering:
Robert J. Clark
10/17/10
#39712

Rev.	Rev. Description
26/8/10	Adding face mount drawing into one drawing together with the reveal fit

Date: 24 Sep 2010
Scale: NA
Design by: CRIMSAFE

PRODUCT CONTROL DIVISION
Approved as complying with the Florida Building Code
Date 10/20/2010
NOA# 10-0706.05
Miami-Dade Product Control Division
By

Drawing Number
MD-301-STD

Sheet
06 of 08

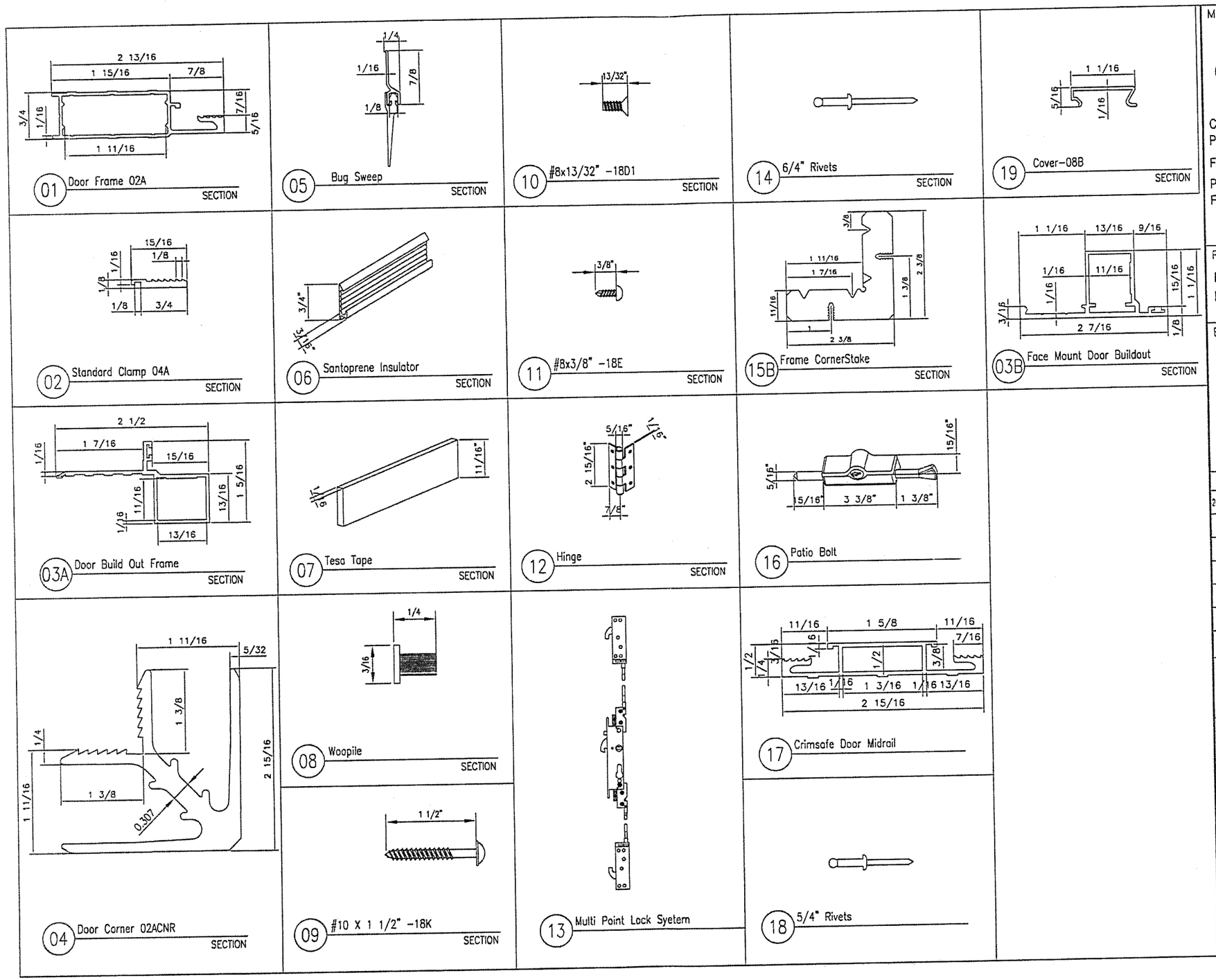

Manufacturer:

Crimsafe North America
PO Box 2440 Eaton Park
FL 33840-2440
Phone: +1 863 510 0188
Fax: +1 863 665 0485

Product:

HINGED DOOR HURRICANE SCREEN

Engineering:

Robert L. Clark
10/17/10
#39712

Rev.	Rev. Description
26/8/10	Adding face mount drawing into one drawing together with the reveal fit

Date: 24 Sep 2010
Scale: NA
Design by: CRIMSAFE

PRODUCT CONTROL DIVISION
Approved as complying with the Florida Building Code
Date 10/20/2010
NOAA 10-0706.05
Miami Dade Product Control Division
By Helmy A. Mahr

Drawing Number
MD-301-STD

Sheet
07 of 08

BILL OF MATERIAL

ITEM	DESCRIPTION	MATERIAL	QTY
01	Door Frame 02A	6063-T5	4
02	Standard Clamp 04A	6063-T5	6
03A	Door Build Out Frame	6063-T5	3
03B	Face Mount Door Buildout	6063-T5	3
04	Door Corner 02ACNR	6063-T5	4
05	Crimsafe Bug Seal and Retainer	6063-T5	1
06	Santoprene Insulator	Santoprene	4
07	Tesa Tape	-	4
08	Woolpile	-	4
09	#10 X 1 1/2" -18K	Stainless Steel	30
10	#8x13/32" -18D1	Stainless Steel	270
11	#8x3/8" -18E	Stainless Steel	11
12	Hinge	Steel	4
13	Multi Point Lock Syetem	Steel	1
14	6/4" Rivets	Stainless Steel	27
15B	Frame CornerStake	6063-T5	2
16	Patio Bolt	Steel	2
17	Crimsafe Door Midrail	6063-T5	1
18	5/4" Rivets	Stainless Steel	32
19	Cover-08B	6063-T5	3

ANCHOR NOTES:

1. ALLOWABLE ANCHORS SHALL BE AS LISTED IN APPROPRIATE ANCHOR SCEDULE AND SPACED SHOWN ON SHEET 1 ELEVATIONS.

2. ANCHORS SHALL BE INSTALLED IN ACCORDANCE WITH MANUFACTURES RECOMENDATIONS. MINIMUM EMBEDMENT DEPTHS AND EDGE DISTANCES SHALL APPLY AS NOTED IN APPROPRITE ANCHOR SCHEDULE.

3. SYSTEM MAY BE INSTALLED TO CONCRETE, HOLLOW BLOCK, WOOD, STEEL OR AN APPROVED IMPACT RESISTANT ALUMINUM FRAME OF ALLOY 6063-T5 (MIN). FRAME SHALL BE INSTALLED PER RESPECTIVE APPROVAL DOCUMENTATION.

4. WHERE EXISTING STRUCTURE IS WOOD FRAMING, EXISTING CONDITIONS MAY VARY, FIELD VERIFY THAT FASTENERS ARE INTO ADEQUATE WOOD FRAMING MEMBERS, NOT PLYWOOD.

5. WHERE WOOD SCREWS FASTEN TO NARROW FACE OF STUD FRAMING, FASTENER SHALL BE LOCATED IN CENTER OF NOMINAL (MIN) WOOD STUD (19mm. EDGE DISTANCE IS ACCEPTABLE FOR WOOD FRAMEING), AND SHALL PENETRATE 1.5" MIN WOOD STUD SHALL BE "SOUTHERN PINE" G=0.55 OR GREATER DENSITY, WOOD SCREW SHALL HAVE PHILILIPS PAN HEAD OR HEX HEAD.

6. MINIMUM EMBEDMENT AND EDGE DISTANCE EXCLUDES STUCCO, FOAM, BRICK, AND OTHER WALL FINISHS.

7. ALL SCREW TO ALUMINUM SHALL BE INSTALLED WITH FULL THREAD PENETRATION AND MINIMUM 0.5" EDGE DISTANCE TO APPROVED 6063-T5 (MIN) ALUMINUM FRAME (0.125" MIN THICKNESS).

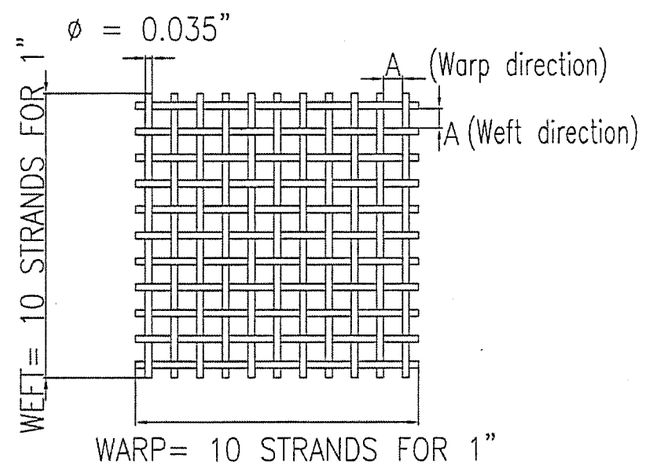

SCREEN INFORMATION

ALL DIMENSION IN INCHES

Manufacturer:

Crimsafe North America
PO Box 2440 Eaton Park
FL 33840-2440
Phone: +1 863 510 0188
Fax: +1 863 665 0485

Product:

HINGED DOOR HURRICANE SCREEN

Engineering:

Robert J. Clark
10/17/10
#39712

Rev.	Rev. Description
26/8/10	Adding face mount drawing into one drawing together with the reveal fit

Date: 30 June 2010
Scale: NA
Design by: CRIMSAFE

PRODUCT CONTROL DIVISION
Approved as complying with the Florida Building Code
Date: 10/20/2010
NOA# 10-0706.05
Miami Dade Product Control Division
By: Helmy A. Mahdi

Drawing Number
MD-301-STD

Sheet
08 of 08