MIAMI-DADE COUNTY
BUILDING CODE COMPLIANCE OFFICE (BCCO)
PRODUCT CONTROL DIVISION

MIAMI-DADE COUNTY, FLORIDA
METRO-DADE FLAGLER BUILDING
140 WEST FLAGLER STREET, SUITE 1603
MIAMI, FLORIDA 33130-1563
(305) 375-2901 FAX (305) 372-6339
www.miamidade.gov/buildingcode

NOTICE OF ACCEPTANCE (NOA)

Trainor Glass Company
1101 13th Street
Riviera Beach, FL 33404

SCOPE:
This NOA is being issued under the applicable rules and regulations governing the use of construction materials. The documentation submitted has been reviewed by Miami-Dade County Product Control Division and accepted by the Board of Rules and Appeals (BORA) to be used in Miami Dade County and other areas where allowed by the Authority Having Jurisdiction (AHJ).
This NOA shall not be valid after the expiration date stated below. The Miami-Dade County Product Control Division (In Miami Dade County) and/or the AHJ (in areas other than Miami Dade County) reserve the right to have this product or material tested for quality assurance purposes. If this product or material fails to perform in the accepted manner, the manufacturer will incur the expense of such testing and the AHJ may immediately revoke, modify, or suspend the use of such product or material within their jurisdiction. BORA reserves the right to revoke this acceptance, if it is determined by Miami-Dade County Product Control Division that this product or material fails to meet the requirements of the applicable building code. This product is approved as described herein, and has been designed to comply with the Florida Building Code, including the High Velocity Hurricane Zone.

DESCRIPTION: Series "TCW-250P LMR" Aluminum Curtain Wall System w/Reinforced Mullion – L.M.I.

APPROVAL DOCUMENT: Drawing No. **TCW250P-LMR,** titled "TCW-250P Series w/Reinforced Mullions – Large Missile Impact", sheets 1 through 9 of 9, dated 10/20/10, prepared by manufacturer, signed and sealed by William D. Cook, P.E., bearing the Miami-Dade County Product Control Revision stamp with the Notice of Acceptance number and expiration date by the Miami-Dade County Product Control Division.

MISSILE IMPACT RATING: Large and Small Missile Impact Resistant

LABELING: Each unit shall bear a permanent label with the manufacturer's name or logo, city, state and following statement: "Miami-Dade County Product Control Approved", unless otherwise noted herein.

RENEWAL of this NOA shall be considered after a renewal application has been filed and there has been no change in the applicable building code negatively affecting the performance of this product.

TERMINATION of this NOA will occur after the expiration date or if there has been a revision or change in the materials, use, and/or manufacture of the product or process. Misuse of this NOA as an endorsement of any product, for sales, advertising or any other purposes shall automatically terminate this NOA. Failure to comply with any section of this NOA shall be cause for termination and removal of NOA.

ADVERTISEMENT: The NOA number preceded by the words Miami-Dade County, Florida, and followed by the expiration date may be displayed in advertising literature. If any portion of the NOA is displayed, then it shall be done in its entirety.

INSPECTION: A copy of this entire NOA shall be provided to the user by the manufacturer or its distributors and shall be available for inspection at the job site at the request of the Building Official.
This NOA **revises and renews NOA # 05-0624.03** and consists of this page 1 and Evidence pages E-1, E-2 and E-3, as well as approval document mentioned above.
The submitted documentation was reviewed by **Manuel Perez, P.E.**

MIAMI-DADE COUNTY APPROVED

NOA No. 10-0728.07
Expiration Date: August 25, 2015
Approval Date: December 30, 2010

Trainor Glass Company

NOTICE OF ACCEPTANCE: EVIDENCE SUBMITTED

A. DRAWINGS

1. Manufacturer's die drawings and sections.
2. Drawing No. **TCW250P-LMR,** titled "TCW-250P Series w/Reinforced Mullions – Large Missile Impact", sheets 1 through 9 of 9, dated 10/20/10, prepared by manufacturer, signed and sealed by William D. Cook, P.E.

B. TESTS

1. Test reports on: 1) Air Infiltration Test, per FBC, TAS 202-94
   2) Uniform Static Air Pressure Test, Loading per FBC, TAS 202-94
   3) Water Resistance Test, per FBC, TAS 202-94
   4) Large Missile Impact Test per FBC, TAS 201-94
   5) Cyclic Wind Pressure Loading per FBC, TAS 203-94

   along with marked-up drawings and installation diagram of an aluminum window wall system, prepared by Hurricane Test Laboratory, LLC Test Report No. **HTL-0062-1020-03,** dated 10/24-27/03, signed and sealed by Vinu J. Abraham, P.E. ***(Submitted under previous NOA #05-0624.03)***
2. Test reports on: 1) Air Infiltration Test, per FBC, TAS 202-94
   2) Uniform Static Air Pressure Test, Loading per FBC, TAS 202-94
   3) Water Resistance Test, per FBC, TAS 202-94
   4) Large Missile Impact Test per FBC, TAS 201-94
   5) Cyclic Wind Pressure Loading per FBC, TAS 203-94

   along with marked-up drawings and installation diagram of an aluminum window wall system, prepared by Hurricane Test Laboratory, LLC Test Report No. **HTL-0062-0302-04,** dated 02/23-4/07/04, signed and sealed by Vinu J. Abraham, P.E. ***(Submitted under previous NOA #05-0624.03)***
3. Test reports on: 1) Large Missile Impact Test per FBC, TAS 201-94
   2) Cyclic Wind Pressure Loading per FBC, TAS 203-94

   along with marked-up drawings and installation diagram of an aluminum window wall system, prepared by Hurricane Test Laboratory, LLC Test Report No. **HTL-0062-0406-04,** dated 02/23-04/07/04, signed and sealed by Vinu J. Abraham, P.E. ***(Submitted under previous NOA #05-0624.03)***
4. Test reports on: 1) Air Infiltration Test, per FBC, TAS 202-94
   2) Uniform Static Air Pressure Test, Loading per FBC, TAS 202-94
   3) Water Resistance Test, per FBC, TAS 202-94
   4) Large Missile Impact Test per FBC, TAS 201-94
   5) Cyclic Wind Pressure Loading per FBC, TAS 203-94

   along with marked-up drawings and installation diagram of an aluminum window wall system, prepared by Hurricane Test Laboratory, LLC Test Report No. **HTL-0062-0916-03,** dated 09/23-24/03, signed and sealed by Vinu J. Abraham, P.E. ***(Submitted under previous NOA #05-0624.03)***

Manuel Perez, P.E.
Product Control Examiner
NOA No. 10-0728.07
Expiration Date: August 25, 2015
Approval Date: December 30, 2010

NOTICE OF ACCEPTANCE: EVIDENCE SUBMITTED

B. TESTS (CONTINUED)

5. Test reports on: 1) Air Infiltration Test, per FBC, TAS 202-94
2) Uniform Static Air Pressure Test, Loading per FBC, TAS 202-94
3) Water Resistance Test, per FBC, TAS 202-94
4) Large Missile Impact Test per FBC, TAS 201-94
5) Cyclic Wind Pressure Loading per FBC, TAS 203-94
along with marked-up drawings and installation diagram of an aluminum window wall system, prepared by Hurricane Test Laboratory, LLC Test Report No. **HTL-0062-0916-03,** dated 11/10-12/05/03, signed and sealed by Vinu J. Abraham, P.E. ***(Submitted under previous NOA #05-0624.03)***

6. Test reports on: 1) Air Infiltration Test, per FBC, TAS 202-94
2) Uniform Static Air Pressure Test, Loading per FBC, TAS 202-94
3) Water Resistance Test, per FBC, TAS 202-94
4) Large Missile Impact Test per FBC, TAS 201-94
5) Cyclic Wind Pressure Loading per FBC, TAS 203-94
along with marked-up drawings and installation diagram of an aluminum window wall system, prepared by Hurricane Test Laboratory, LLC Test Report No. **HTL-0062-1113-03,** dated 02/23-4/07/04, signed and sealed by Vinu J. Abraham, P.E. ***(Submitted under previous NOA #05-0624.03)***

7. Test reports on: 1) Air Infiltration Test, per FBC, TAS 202-94
2) Uniform Static Air Pressure Test, Loading per FBC, TAS 202-94
3) Water Resistance Test, per FBC, TAS 202-94
4) Large Missile Impact Test per FBC, TAS 201-94
5) Cyclic Wind Pressure Loading per FBC, TAS 203-94
along with marked-up drawings and installation diagram of an aluminum window wall system, prepared by Hurricane Test Laboratory, LLC Test Report No. **HTL-0062-0512-04,** dated 03/18-5/11/04, signed and sealed by Vinu J. Abraham, P.E. ***(Submitted under previous NOA #05-0624.03)***

C. CALCULATIONS

1. Anchor verification calculations and structural analysis, complying with FBC-2007, prepared by Bromley-Cook Engineering, dated 10/20/10, signed and sealed by William D. Cook, P.E.
Complies with ASTM E1300-04

D. QUALITY ASSURANCE

1. Miami Dade Building Code Compliance Office (BCCO).

Manuel Perez, P.E.
Product Control Examiner
NOA No. 10-0728.07
Expiration Date: August 25, 2015
Approval Date: December 30, 2010

NOTICE OF ACCEPTANCE: EVIDENCE SUBMITTED

E. MATERIAL CERTIFICATIONS

1. Notice of Acceptance No. **07-1116.04** issued to **E.I. DuPont DeNemours & Co.**, Inc. for their "**DuPont SentryGlas ® Plus**" dated 01/03/08, expiring on 01/14/12.
2. Notice of Acceptance No. **08-0206.01** issued to **Solutia, Inc.** for their "**Saflex HP Glass Interlayer**" dated 04/17/08, expiring on 04/14/13.
3. Notice of Acceptance No. **08-0520.08** issued to **Solutia, Inc.** for their "**Vanceva Composites Glass Interlayer**" dated 07/17/08, expiring on 12/11/13.
4. Notice of Acceptance No. **10-0201.01** issued to **Viracon, Inc.** for their "**Viracon HRG-2 Glass Interlayer**", dated 03/24/10, expiring on 02/12/14. NEW

F. STATEMENTS

1. Statement letter of conformance, dated November 17, 2010, signed and sealed by William W. Cook, P.E.
2. Statement letter of no financial interest, dated November 8, 2010, signed and sealed by William W. Cook, P.E.
3. Laboratory compliance letter for Test Reports No. **HTL-0062-0916-03, HTL-0062-1020-03, HTL-0062-0105-04, HTL-0062-0302-04, HTL-0062-0406-04 and HTL-0062-0512-04**, issued by Hurricane Test Laboratory, LLC, dated September 16, 2004, signed and sealed by Vinu J. Abraham, P.E.
   (Submitted under previous NOA #05-0624.03)

G. OTHERS

1. Notice of Acceptance No. **05-0624.03**, issued to Trainor Glass Company for their Series "TCW250P" Aluminum Curtain Wall System W/Reinforced Mullions - LMR, approved on 08/25/05 and expiring on 08/25/10.

Manuel Perez

Manuel Perez, P.E.
Product Control Examiner
NOA No. 10-0728.07
Expiration Date: August 25, 2015
Approval Date: December 30, 2010

TCW-250P SERIES WINDOW WALL SYSTEM
W/ REINFORCED MULLIONS
APPROVED FOR VERTICAL FACE COVERS OR BUTT JOINTS
LARGE MISSILE IMPACT

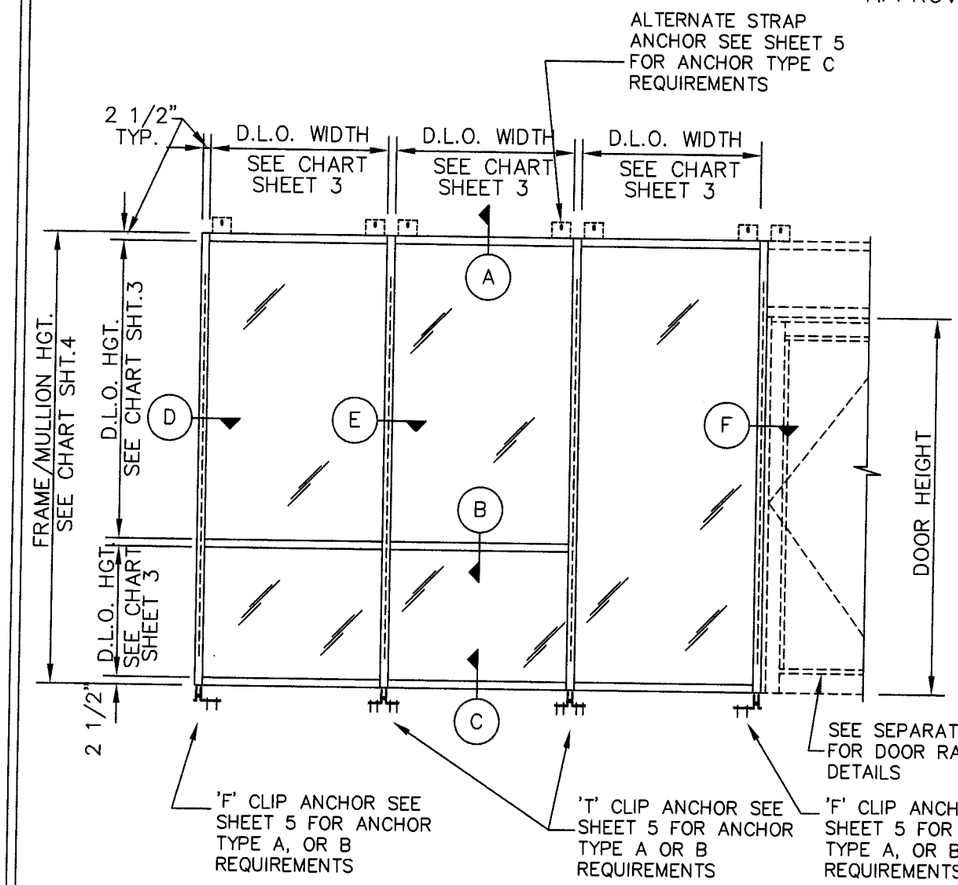

TYPICAL ELEVATION

MULTIPLE UNITS
W/ TGF-209 FACE COVER

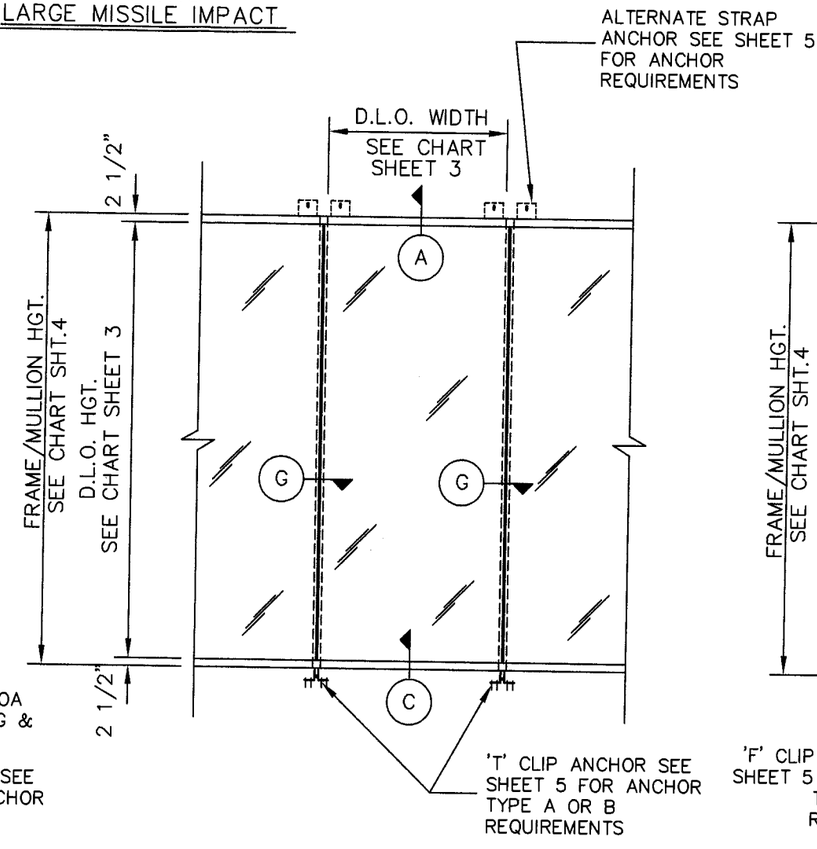

TYPICAL ELEVATION

W/ VERTICAL BUTT JOINTS
(STRUCTURALLY GLAZED OPTION)

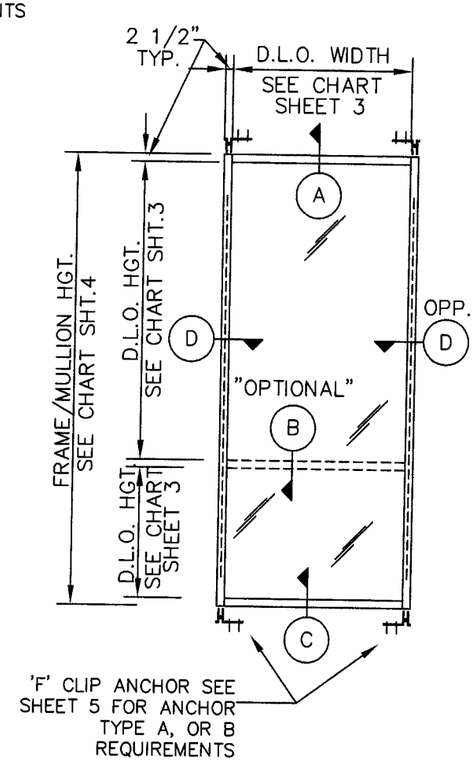

TYPICAL ELEVATION

SINGLE FIXED WINDOW
(PUNCHED OPENING)

NOTES:

1.)ALUMINUM WINDOW WALL SYSTEM IS RATED FOR LARGE MISSILE IMPACT. SHUTTERS ARE NOT REQUIRED.
2.)THIS SYSTEM MAY BE USED IN CONJUNCTION WITH APPROVED ENTRANCE DOORS.
3.)CODE REQUIREMENTS FOR SAFEGUARDS MUST BE OBSERVED.
4.)THIS PRODUCT IS DESIGNED TO COMPLY WITH THE HIGH VELOCITY HURRICANE ZONE OF THE 2007 FLORIDA BUILDING CODE.
5.)WOOD BUCKS BY OTHERS MUST BE ANCHORED PROPERLY TO TRANSFER LOADS TO THE STRUCTURE. BUCKS SHALL BE DESIGNED BY PROFESSIONAL ENGINEER OF RECORD
6.)ANCHORS SHALL BE AS LISTED IN CHARTS AND SPACED AS DETAILED.
7.)ANCHOR EMBEDMENT TO BASE MATERIAL SHALL BE BEYOND WALL DRESSING OR STUCCO.
8.)ALL STEEL IN CONTACT WITH ALUMINUM TO BE PAINTED OR PLATED. COATING SHALL BE BITUMINOUS OR ASPHALTIC IN CONFORMANCE WITH FBC 2003.8.4.1.

INSTRUCTIONS:

STEP 1: DETERMINE DESIGN WIND LOAD REQUIREMENT BASED ON WIND VELOCITY, BLDG. HEIGHT, WIND ZONE. USING APPLICABLE ASCE 7 STANDARDS.

STEP 2: SEE CHARTS ON SHEET 3 FOR DESIGN LOAD CAPACITY OF DESIRED GLASS SIZE. MATCH GLASS SIZE AND DESIGN LOAD

STEP 3: CHECK MULLION CAPACITY FOR GIVEN SPACING AND HEIGHT USING CHARTS ON SHEET 4. THE CAPACITY SHOULD EQUAL OR EXCEED THE DESIGN LOAD.

STEP 4: USING CHARTS ON SHEET 5 SELECT ANCHOR OPTION WITH WITH DESIGN RATING EQUAL TO OR GREATER THAN DESIGN LOAD SPECIFIED IN STEP 1.

PRODUCT REVISED
as complying with the Florida Building Code
Acceptance No 10-0728.07
Expiration Date AUG. 25, 2015
By Maurel Perez
Miami Dade Product Control Division

BROMLEY COOK ENGINEERING, INC.
STRUCTURAL ENGINEERING SERVICES
5440 N.W. 33RD AVENUE SUITE 100
FT. LAUDERDALE, FLORIDA 33309
PH. (954) 772-4624 FAX (954) 772-4634

WILLIAM D. COOK LICENSE No 43904 STATE OF FLORIDA PROFESSIONAL ENGINEER
NOV 23 2010
WILLIAM D. COOK P.E.
FLA. REG. No. 43904
SHEET # 2008

TRAINOR GLASS COMPANY
1101 13th STREET WEST, RIVIERA BEACH, FL 33404
PH. (561) 863-7078 FAX (561) 863-7088
www.trainorglass.com
ATLANTA,GA. CHICAGO,IL. DENVER,CO. ORLANDO, FL. NEWARK, N.J.

NO.	DATE	BY	REVISIONS

PROJECT NAME: TCW-250P SERIES W/REINFORCED MULLIONS
LARGE MISSILE IMPACT

DATE: 10/20/10
SCALE: N.T.S.
DRAWN:
CHECKED BY:
DRAWING NUMBER: TCW250P-LMR
SHEET NO. 1 of 9

GLASS SCHEDULE

TYPE	NOMINAL THCKNSS	DESCRIPTION		MISSILE TYPE
G-1	9/16"	LAMINATED GLASS (VISION OR SPANDREL)	1/4" HS OUTBOARD 0.100" SOLUTIA H.P. INTERLAYER 1/4" HS INBOARD	LARGE
G-2	9/16"	LAMINATED "VANCEVA STORM"	1/4" HS OUTBOARD 0.075" VANCEVA STORM INTERLAYER 1/4" HS INBOARD	LARGE
G-3	5/8"	LAMINATED "HRG-2"	1/4" HS OUTBOARD/0.050" URETHANE/0.080" POLYCARB 0.050" URETHANE/1/4" HS INBOARD	LARGE
G-4	9/16"	LAMINATED "SENTRYGLAS PLUS"	1/4" HS OUTBOARD 0.090" S.G.P. INTERLAYER 1/4" HS INBOARD	LARGE
G-5	1 3/8"	INSULATED "HRG-2"	1/4" TEMP. OUTBOARD / 1/2" AIRSPACE 1/4" HS/0.050" URETHANE/0.080" POLYCARB/0.050" URETHANE 1/4" HS INBOARD	LARGE
G-6	1 5/16"	INSULATED LAMINATED GLASS (VISION OR SPANDREL)	1/4" TEMP. OUTBOARD / 1/2" AIRSPACE 1/4" HS/0.100" SOLUTIA HP INTERLAYER/ 1/4" HS INBOARD	LARGE

OPTIONAL: 6mm THK. COMPOSITE ALUMINUM PANEL IN LIEU OF GLAZING (COMPOSITION: .030" ALUM. SHEET – 3/16" PLYWOOD – .030" ALUM. SHEET)

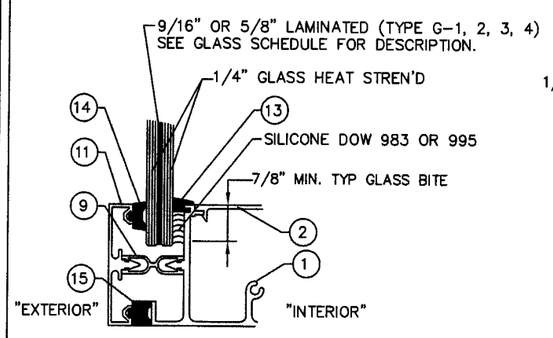

NON INSULATED

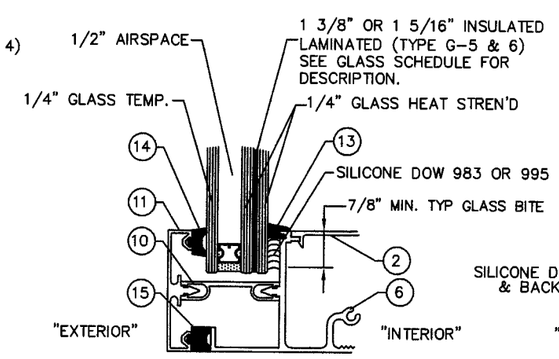

INSULATED

GLAZING DETAILS

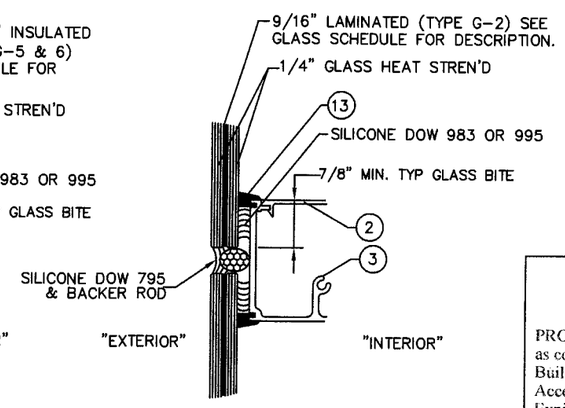

STRUCTURAL GLAZED

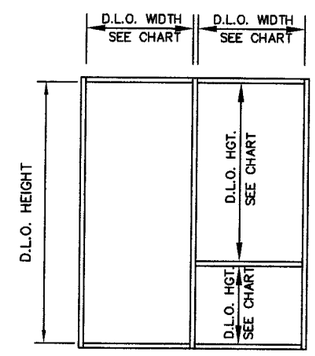

PRODUCT REVISED
as complying with the Florida Building Code
Acceptance No 10-0728.07
Expiration Date AUG. 25, 2015
By Manuel Perez
Miami/Dade Product Control Division

BROMLEY COOK ENGINEERING, INC.
STRUCTURAL ENGINEERING SERVICES
5440 N.W. 33RD AVENUE SUITE 100
FORT LAUDERDALE, FLORIDA 33309
TEL: (954) 772-4624 FAX: (954) 772-4634

WILLIAM D. COOK, P.E.
FLA P.E. # 43904
FLA S.I. # 2008

TRAINOR GLASS COMPANY
1101 13th STREET WEST, RIVIERA BEACH, FL 33404
PH. (561) 863-7078 FAX (561) 863-7088
www.trainorglass.com
ATLANTA,GA. CHICAGO,IL. DENVER,CO. ORLANDO, FL. NEWARK, NJ.

NO.	DATE	BY	REVISIONS
1	7/21/05	M.G.	GENERAL REVISIONS PER B.C.C.O. COMMENTS

PROJECT NAME: TCW-250P LMR SERIES

LARGE MISSILE IMPACT W/ REINFORCED MULLIONS

DRAWING NUMBER: TCW250P-LMR

SHEET NO. 2 OF 9

DATE: 10/20/10

SCALE: N.T.S.

DRAWN:

CHECKED BY:

GLASS LOAD CAPACITY – P.S.F.

NOMINAL DIM'S.		LAMINATED GLASS GLASS TYPE: G1, G4		LAMINATED GLASS (STRUCTURALLY GLAZED) GLASS TYPE: G2		LAMINATED GLASS GLASS TYPE: G3		LAMINATED–INSULATED GLASS TYPE: G5		LAMINATED–INSULATED GLASS TYPE: G6	
D.L.O. WIDTH	D.L.O. HEIGHT	EXT. (+)	EXT. (–)	EXT. (+)	EXT. (–)	EXT. (+)	EXT. (–)	EXT. (+)	EXT. (–)	EXT. (+)	EXT. (–)
42"	81"	80	110	80	102	80	90	80	95	80	110
45"		80	110	80	102	80	90				
48"		80	110	80	102	80	90				
51"		80	110	80	102	80	90				
54"		80	110	80	102	80	90				
57"		80	110	80	102	80	90				
60"		80	110	80	100	80	90				
63"		80	109	80	98	80	90				
66"		80	107	80	95	80	90				
42"	84"	80	110	80	102	80	90				
45"		80	110	80	102	80	90				
48"		80	110	80	102	80	90				
51"		80	110	80	102	80	90				
54"		80	110	80	102	80	90				
57"		80	107	80	102	80	90				
60"		80	105	80	100	80	90				
64"		80	102	80	96	80	90				
42"	87"	80	110	80	102	80	90				
45"		80	110	80	102	80	90				
48"		80	110	80	102	80	90				
51"		80	110	80	102	80	90				
54"		80	105	80	102	80	90				
57"		80	102	80	102	80	90				
60"		80	99	80	100	80	90				
62"		80	98	80	98	80	90				
39"	90"	80	110	80	102	80	90				
42"		80	110	80	102	80	90				
45"		80	110	80	102	80	90				
48"		80	107	80	102	80	90				
51"		80	103	80	102	80	90				
54"		80	100	80	102	80	90				
57"		80	97	80	102	80	90				
60"		80	94	80	100	80	90				
36"	93"	80	110	80	102	80	90				
39"		80	110	80	102	80	90				
42"		80	110	80	102	80	90				
45"		80	107	80	102	80	90				
48"		80	102	80	102	80	90				
51"		80	98	80	102	80	90				
54"		80	95	80	102	80	90				
58"		80	91	80	102	80	90				

GLASS LOAD CAPACITY – P.S.F.

NOMINAL DIM'S.		LAMINATED GLASS GLASS TYPE: G1, G4		LAMINATED GLASS (STRUCTURALLY GLAZED) GLASS TYPE: G2		LAMINATED GLASS GLASS TYPE: G3		LAMINATED–INSULATED GLASS TYPE: G5		LAMINATED–INSULATED GLASS TYPE: G6	
D.L.O. WIDTH	D.L.O. HEIGHT	EXT. (+)	EXT. (–)	EXT. (+)	EXT. (–)	EXT. (+)	EXT. (–)	EXT. (+)	EXT. (–)	EXT. (+)	EXT. (–)
39"	95"	80	110	80	102	80	90	80	95	80	110
42"		80	109	80	102	80	90				
45"		80	104	80	102	80	90				
48"		80	99	80	102	80	90				
51"		80	96	80	102	80	90				
54"		80	92	80	102	80	90				
56"		80	90	80	102	80	90				
36"	99"	80	110	80	102	80	90				
39"		80	109	80	102	80	90				
42"		80	103	80	102	80	90				
45"		80	98	80	102	80	90				
48"		80	94	80	102	80	90				
51"		80	90	80	102	80	90				
54"		80	90	80	102	80	90				
36"	102"	80	110	80	102	80	90				
39"		80	105	80	102	80	90				
42"		80	100	80	102	80	90				
45"		80	95	80	102	80	90				
48"		80	90	80	102	80	90				
51"		80	90	80	102	80	90				
53"		80	90	80	102	80	90				
36"	105"	80	108	80	102	80	90				
39"		80	102	80	102	80	90				
42"		80	96	80	102	80	90				
45"		80	91	80	102	80	90				
48"		80	90	80	102	80	90				
51"		80	90	80	102	80	90				
36"	108"	80	105	80	102	80	90				
39"		80	98	80	102	80	90				
42"		80	93	80	102	80	90				
45"		80	90	80	102	80	90				
48"		80	90	80	102	80	90				
50"		80	90	80	102	80	90				
36"	111"	80	101	80	102	80	90				
39"		80	95	80	102	80	90				
42"		80	90	80	102	80	90				
45"		80	90	80	102	80	90				
48"		80	90	80	102	80	90				
36"	114"	80	98	80	102	80	90				
39"		80	92	80	102	80	90				
42"		80	90	80	102	80	90				
45"		80	90	80	102	80	90				
47"		80	90	80	102	80	90				

PRODUCT REVISED
as complying with the Florida
Building Code
Acceptance No 10-0728.07
Expiration Date AUG. 25, 2015
By Manuel Perez
Miami-Dade Product Control
Division

BROMLEY COOK ENGINEERING, INC.
STRUCTURAL ENGINEERING SERVICES
5440 N.W. 33RD AVENUE SUITE 100
FORT LAUDERDALE, FLORIDA 33309
TEL: (954) 772-4624 FAX: (954) 772-4634

WILLIAM D. COOK LICENSE No 43904 STATE OF FLORIDA PROFESSIONAL ENGINEER
NOV. 2, 2010
WILLIAM D. COOK, P.E.
FLORIDA LICENSE #43904

TRAINOR GLASS COMPANY
1101 13th STREET WEST, RIVIERA BEACH, FL 33404
PH. (561) 863-7078 FAX (561) 863-7088
www.trainorglass.com
ATLANTA,GA. CHICAGO,IL. DENVER,CO. ORLANDO, FL. NEWARK, N.J.

NO.	DATE	BY

REVISIONS

PROJECT NAME: TCW–250P LMR SERIES

LARGE MISSILE IMPACT W/ REINFORCED MULLIONS

DATE: 10/20/10
SCALE: N.T.S.
DRAWN:
CHECKED BY:
DRAWING NUMBER: TCW250P–LMR
SHEET NO. 3 of 9

JAMB & MULLION LOAD CAPACITY – P.S.F. (REINFORCED MULLIONS)			
NOMINAL DIM'S.		INTERMEDIATE MULLION JAMB/DOOR MULLION	
WIDTH (W)	MULLION HGT.	EXT. (+)	EXT. (–)
49"	108"	80	110
55"			
61"			
67"			
73"			
74"			
79"			
45"	114"		
51"			
57"			
63"			
69"			
75"			
35"	120"		
41"			
47"			
53"			
59"			
65"			
71"			
32"	126"		
38"			
44"			
50"			
56"			
62"			
68"		80	110

JAMB & MULLION LOAD CAPACITY – P.S.F. (REINFORCED MULLIONS)			
NOMINAL DIM'S.		INTERMEDIATE MULLION JAMB/DOOR MULLION	
WIDTH (W)	MULLION HGT.	EXT. (+)	EXT. (–)
35"	132"	80	110
41"			
47"			
53"			
59"			
65"			
32"	138"		
38"			
44"			
50"			
56"			
62"			
30"	143"		
36"			
42"			
48"			
54"			
60"		80	110

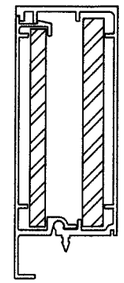

FRAME JAMB

TGF–201/110

REINFORCING: 1/2" X 5" & 3/8" X 4 3/4" STEEL BAR (A36)

ALUMINUM: $I_{xx} = 9.33\ in^4$, $S_{xx} = 3.39\ in^3$

STEEL: (NOT CONVERTED) $I_{xx} = 8.55\ in^4$, $S_{xx} = 3.49\ in^3$

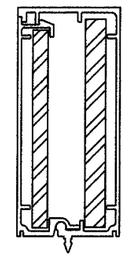

INTERMEDIATE MULLION

TGF–201/202

REINFORCING: 1/2" X 5" & 3/8" X 4 3/4" STEEL BAR (A36)

ALUMINUM: $I_{xx} = 9.33\ in^4$, $S_{xx} = 3.39\ in^3$

STEEL: (NOT CONVERTED) $I_{xx} = 8.55\ in^4$, $S_{xx} = 3.49\ in^3$

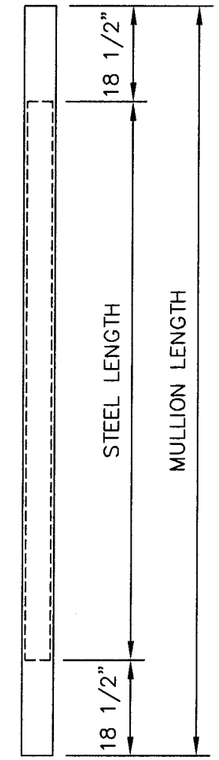

STEEL REINFORCING DIAGRAM

STEEL LENGTH = MULLION LENGTH –37"

CENTER REINFORCING IN SPAN

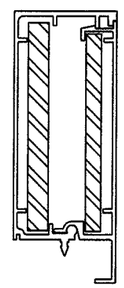

DOOR JAMB @ MULLION

TGF–201/110

REINFORCING: 1/2" X 5" & 3/8" X 4 3/4" STEEL BAR (A36)

ALUMINUM: $I_{xx} = 9.33\ in^4$, $S_{xx} = 3.39\ in^3$

STEEL: (NOT CONVERTED) $I_{xx} = 8.55\ in^4$, $S_{xx} = 3.49\ in^3$

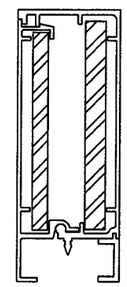

DOOR JAMB @ WALL

TGF–201/110

REINFORCING: 1/2" X 5" & 3/8" X 4 3/4" STEEL BAR (A36)

ALUMINUM: $I_{xx} = 9.33\ in^4$, $S_{xx} = 3.39\ in^3$

STEEL: (NOT CONVERTED) $I_{xx} = 8.55\ in^4$, $S_{xx} = 3.49\ in^3$

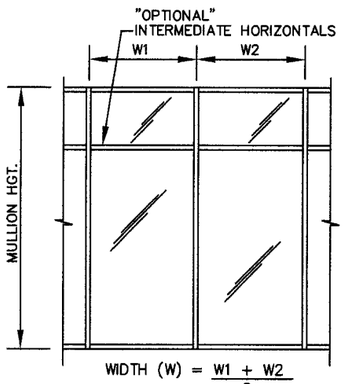

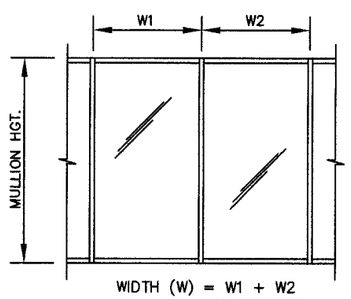

PRODUCT REVISED
as complying with the Florida Building Code
Acceptance No 10-0728.07
Expiration Date AUG. 25, 2015
By
Miami Dade Product Control Division

BROMLEY COOK ENGINEERING, INC.
STRUCTURAL ENGINEERING SERVICES
5440 N.W. 33RD AVENUE, SUITE 100
FORT LAUDERDALE, FLORIDA 33309
TEL: (954) 772-4624 FAX: (954) 772-4634

WILLIAM D. COOK LICENSE No 43904 STATE OF FLORIDA PROFESSIONAL ENGINEER

WILLIAM D. COOK, P.E.
LICENSE No. 43904
FEBRUARY 10, 2010

TRAINOR GLASS COMPANY
1101 13th STREET WEST, RIVIERA BEACH, FL 33404
PH. (561) 863-7078 FAX (561) 863-7088
www.trainorglass.com
ATLANTA,GA. CHICAGO,IL. DENVER,CO. ORLANDO, FL. NEWARK, NJ.

NO.	DATE	BY	REVISIONS

PROJECT NAME: TCW–250P LMR SERIES

LARGE MISSILE IMPACT W/ REINFORCED MULLIONS

DRAWING NUMBER: TCW250P–LMR

SHEET NO. 4 OF 9

DATE: 10/20/10

SCALE: N.T.S.

DRAWN:

CHECKED BY:

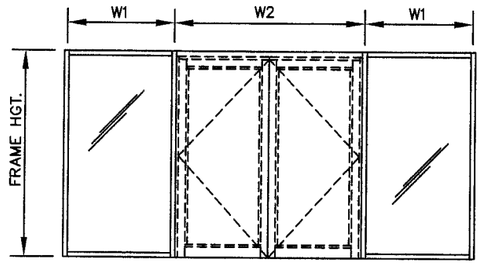

WIDTH (W) = $\frac{W1}{2} + \frac{W2}{4}$ (MULLION)

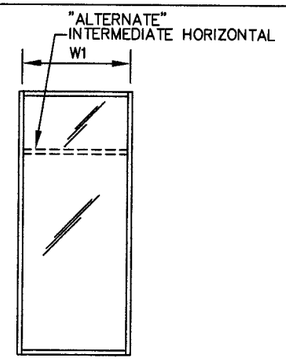

WIDTH (W) = W1
@ JAMB

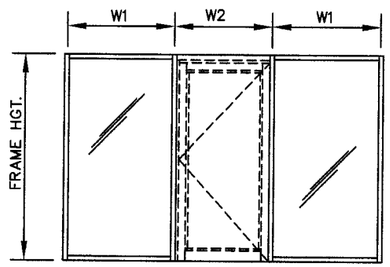

WIDTH (W) = $\frac{W1 + W2}{2}$ (MULLION)

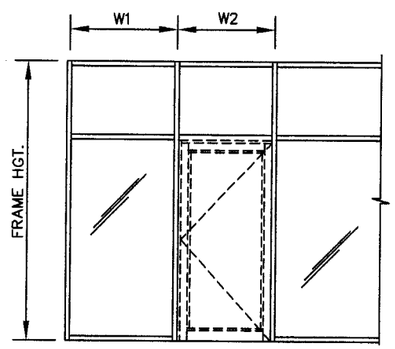

WIDTH (W) = $\frac{W1 + W2}{2}$ (MULLION)

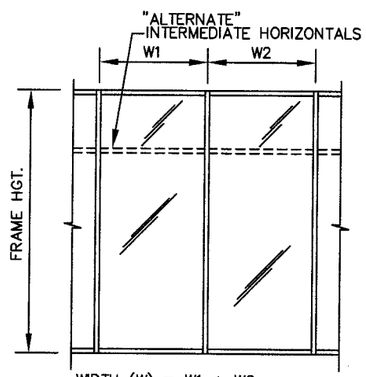

WIDTH (W) = $\frac{W1 + W2}{2}$ (MULLION)

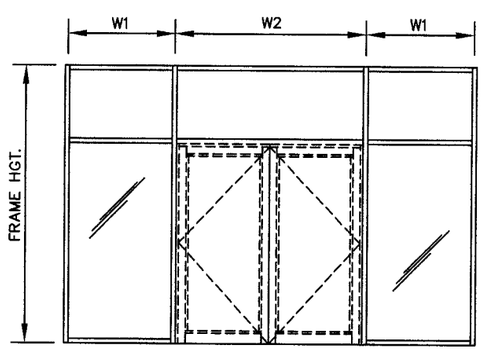

WIDTH (W) = $\frac{W1 + W2}{2}$ (MULLION)

FRAME ANCHOR LOAD CAPACITY – P.S.F. Pmax (+) & (–)				
NOMINAL DIM'S.		ANCHOR TYPES		
WIDTH (W)	MULLION HGT.	A6	B2	C2
49"	108"	110	110	110
55"		110	99	110
61"		110	90	103
67"		110	82	94
73"		105	75	86
79"		97	69	79
45"	114"	110	110	110
51"		110	102	110
57"		110	91	105
63"		110	82	94
69"		105	75	86
75"		96	69	79
35"	120"	110	110	110
41"		110	110	110
47"		110	105	110
53"		110	93	106
59"		110	83	96
65"		106	76	87
71"		97	86	79
32"	126"	110	110	110
38"		110	110	110
44"		110	107	110
50"		110	94	107
56"		110	84	96
62"		106	76	87
68"		96	69	79

FRAME ANCHOR LOAD CAPACITY – P.S.F. Pmax (+) & (–)				
NOMINAL DIM'S.		ANCHOR TYPES		
WIDTH (W)	MULLION HGT.	A6	B2	C2
35"	132"	110	110	110
41"		110	109	110
47"		110	95	110
53"		110	84	97
59"		106	76	87
65"		96	69	79
32"	138"	110	110	110
38"		110	110	110
44"		110	97	110
50"		110	86	98
56"		106	76	87
62"		96	69	79
30"	143"	110	110	110
36"		110	110	110
42"		110	98	110
48"		110	86	99
54"		106	77	88
60"		95	69	79

ANCHORAGE NOTES: SEE BELOW FOR TYPES/DESCRIPTIONS

A6 = (6) ANCHORS TYPE 'A' AT EACH MULLION INTO TGF–14 "T" ANCHOR CLIP. (4) AT EA. JAMB INTO TGF–13 "F" ANCHOR CLIP

B2 = (2) ANCHORS TYPE 'B' AT EACH MULLION INTO TGF–14 "T" ANCHOR CLIP. (2) AT EA. JAMB INTO TGF–13 "F" ANCHOR CLIP

ALTERNATE ANCHORAGE:
C2 = (2) STRAP ANCHORS PER MULLION END (1. EA. SIDE OF MULLION) WITH (1) ANCHOR PER STRAP.
(1) STRAP ANCHOR PER JAMB END

ANCHOR TYPE SCHEDULE	
SUBSTRATE	ANCHOR TYPES
METAL (1/8" THICK)	TYPE 'A' – #14 S.M.S. OR 1/4" SELF DRILLING SCREWS INTO METAL STRUCTURES (A36 STEEL OR 6061–T6)
CONCRETE (3000 PSI MIN)	TYPE 'B' – 3/8" POWERS WEDGE BOLTS DIRECTLY INTO CONC. 2 1/2" MIN. EMBED MIN. EDGE DISTANCE: 3 1/2" MIN. C/C SPACING: 4 1/2" NOTE: FOR 'F' CLIP AT JAMB ONLY USE 2 1/2" C/C SPACING
CONCRETE (3000 PSI MIN)	TYPE 'C' – 3/8" POWERS WEDGE BOLTS DIRECTLY INTO CONC. 2 1/2" MIN. EMBED MIN. EDGE DISTANCE: 3" MIN. C/C SPACING: 4 1/2"

PRODUCT REVISED
as complying with the Florida
Building Code
Acceptance No 10-0723.07
Expiration Date AUG.25,2015
By Maurice Diaz
Miami Dade Product Control
Division

BROMLEY COOK ENGINEERING, INC.
STRUCTURAL ENGINEERING SERVICES
5440 N.W. 33RD AVENUE SUITE 100
FORT LAUDERDALE, FLORIDA 33309
TEL: (954) 772-4624 FAX: (954) 772-4634

WILLIAM D. COOK P.E. LICENSE No 43904 STATE OF FLORIDA PROFESSIONAL ENGINEER

TRAINOR GLASS COMPANY
1101 13th STREET WEST, RIVIERA BEACH, FL 33404
PH. (561) 863-7078 FAX (561) 863-7088
www.trainorglass.com
ATLANTA,GA. CHICAGO,IL. DENVER,CO. ORLANDO, FL. NEWARK, N.J.

NO.	DATE	BY	REVISIONS

PROJECT NAME: TCW–250P LMR SERIES

LARGE MISSILE IMPACT W/ REINFORCED MULLIONS

DRAWING NUMBER: TCW250P–LMR

SHEET NO. 5 OF 9

DATE: 10/20/10
SCALE: N.T.S.
DRAWN:
CHECKED BY:

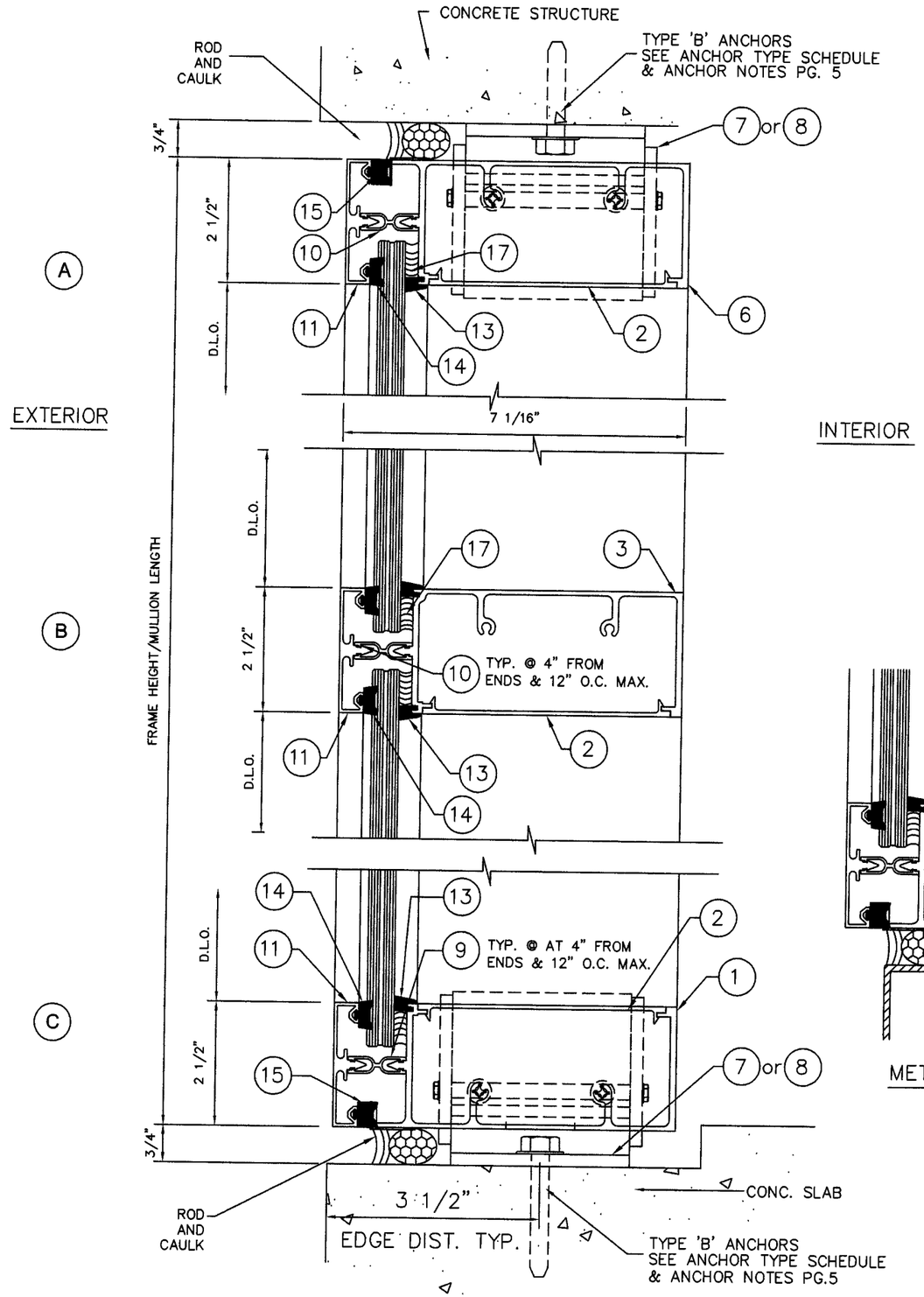

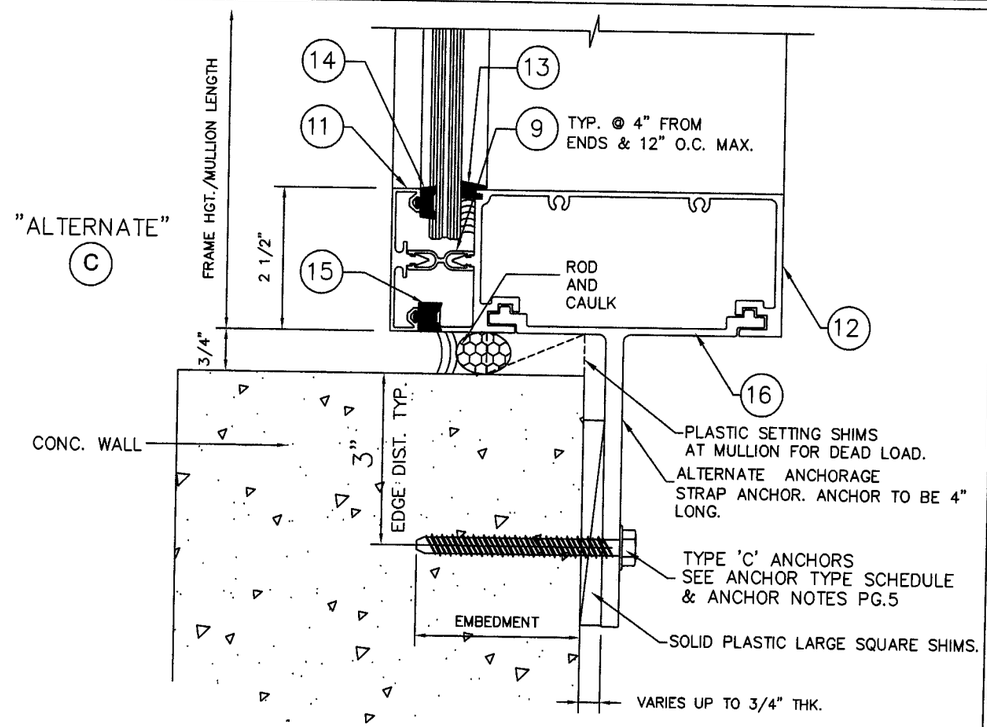

STRAP ANCHOR CONDITION

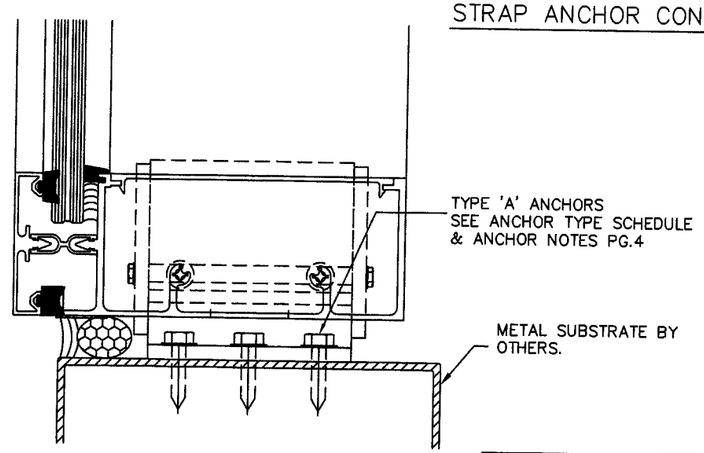

METAL SUBSTRATE CONDITION

SEALANT NOTES:

GLAZING BEAD AT FRAME SEALED TO GLASS WITH DOW CORNING 983/995

FRAME PERIMETER TO STRUCTURE SEALED WITH DOW CORNING 795

PRODUCT REVISED
as complying with the Florida Building Code
Acceptance No 10-0728.07
Expiration Date AUG. 25, 2015
By Manuel Perez
Miami/Dade Product Control Division

BROMLEY COOK ENGINEERING, INC.
STRUCTURAL ENGINEERING SERVICES
5440 N.W. 33RD AVENUE SUITE 100
FORT LAUDERDALE, FLORIDA 33309
TEL: (954) 772-4624 FAX: (954) 772-4634

WILLIAM D. COOK, P.E.
FLA. REG. # 43904
FLA. ST. # 2008

NOV 03 2010

TRAINOR GLASS COMPANY
1101 13th STREET WEST, RIVIERA BEACH, FL 33404
PH. (561) 863-7078 FAX (561) 863-7088
www.trainorglass.com
ATLANTA,GA. CHICAGO,IL. DENVER,CO. ORLANDO, FL. NEWARK, NJ.

NO.	DATE	BY	REVISIONS

PROJECT NAME: TCW-250P LMR SERIES

LARGE MISSILE IMPACT W/ REINFORCED MULLIONS

DRAWING NUMBER: TCW250P-LMR

SHEET NO. 6 OF 9

DATE: 10/20/10
SCALE: N.T.S.
DRAWN:
CHECKED BY:

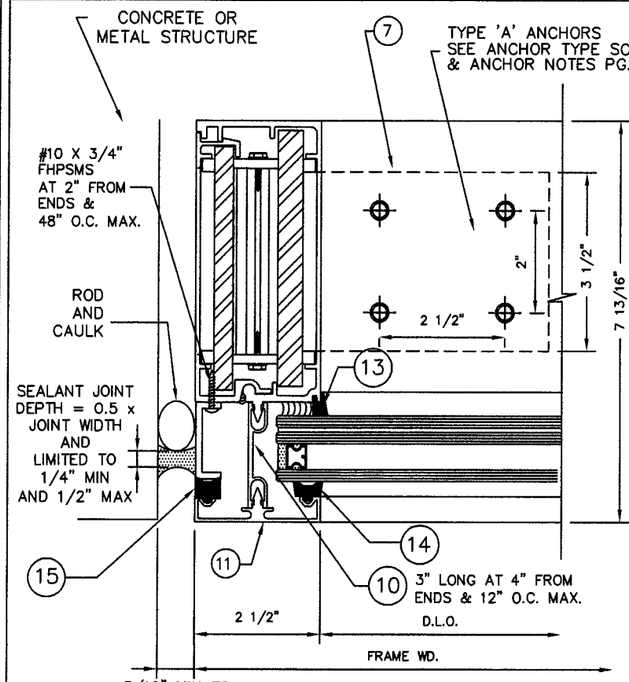

D JAMB

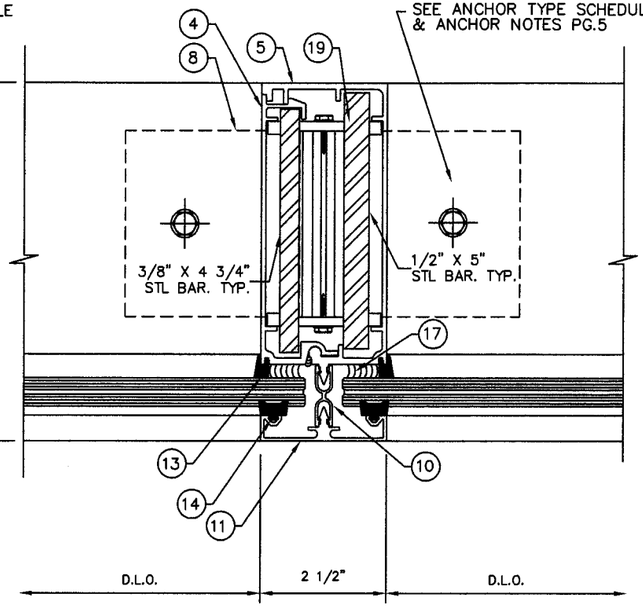

E MULLION

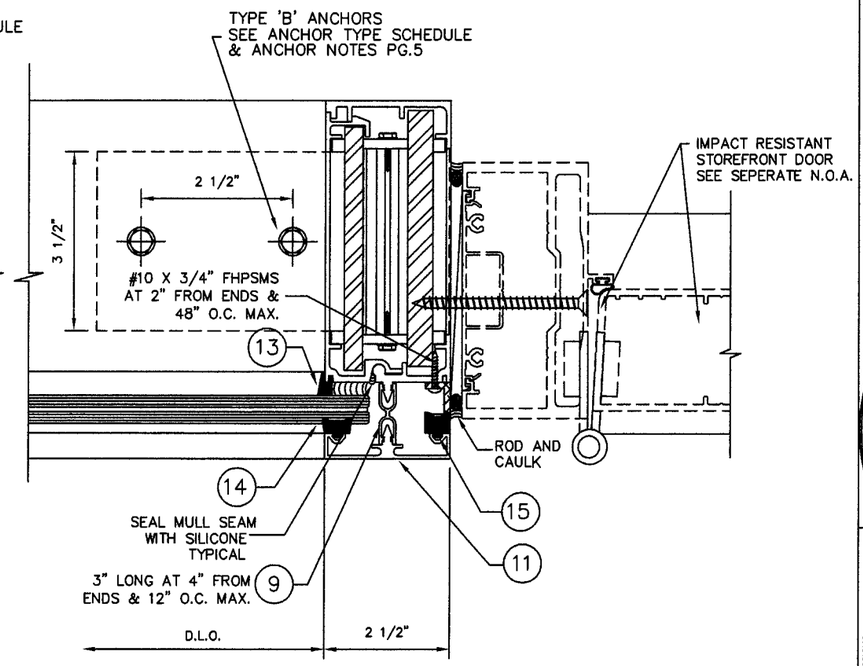

F MULLION AT DOOR JAMB

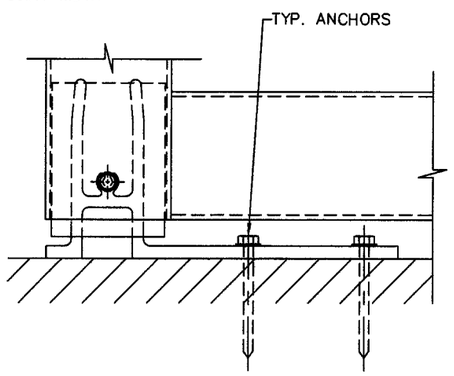

G "F" ANCHOR CLIP TGF-13 FRONT VIEW

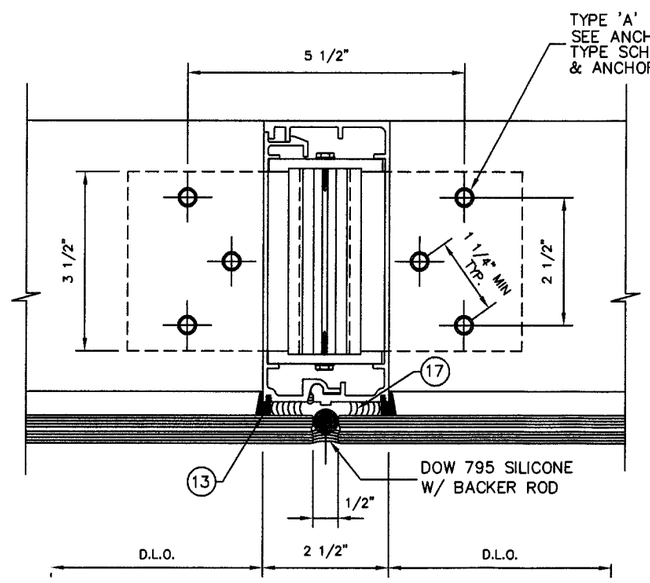

H BUTT JOINT MULLION STRUCTURAL GLAZED

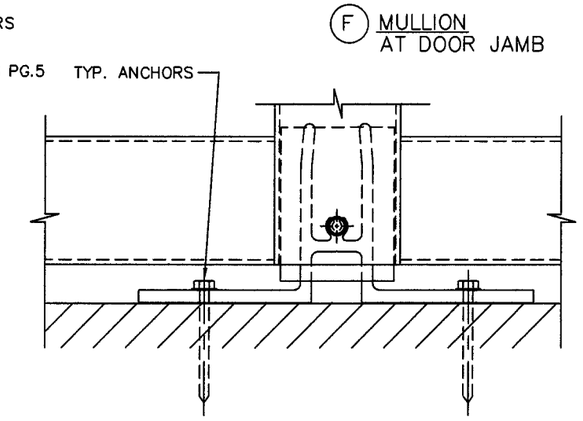

I "T" ANCHOR CLIP TGF-14 FRONT VIEW

JAMB SEALANT NOTES:

PERIMETER SEALANT OPTIONS:
DOW-CORNING 795 SILICONE

ALTERNATE SEALANTS AND JAMB GAPS:
TO BE APPROVED BY DESIGN PROFESSIONAL OF RECORD AND SEALANT MANUFACTURER

PRODUCT REVISED
as complying with the Florida Building Code
Acceptance No 10-0728.07
Expiration Date AUG. 25, 2015
By Manuel Perez
Miami Dade Product Control Division

BROMLEY COOK ENGINEERING, INC.
STRUCTURAL ENGINEERING SERVICES
5440 N.W. 33RD AVENUE SUITE 100
FORT LAUDERDALE, FLORIDA 33309
TEL: (954) 772-4624 FAX: (954) 772-4634

WILLIAM D. COOK LICENSE No 43904 STATE OF FLORIDA PROFESSIONAL ENGINEER
NOV. 27, 2010
WILLIAM D. COOK, P.E.
FLA. P.E. #43904
FLA. REG. #2008

TRAINOR GLASS COMPANY
1101 13th STREET WEST, RIVIERA BEACH, FL 33404
PH. (561) 863-7078 FAX (561) 863-7088
www.trainorglass.com
ATLANTA,GA. CHICAGO,IL. DENVER,CO. ORLANDO, FL. NEWARK, N.J.

NO.	DATE	BY

REVISIONS

PROJECT NAME: TCW-250P LMR SERIES

LARGE MISSILE IMPACT W/ REINFORCED MULLIONS

DRAWING NUMBER: TCW250P-LMR
SHEET NO.: 7 OF 9

DATE: 10/20/10
SCALE: N.T.S.
DRAWN:
CHECKED BY:

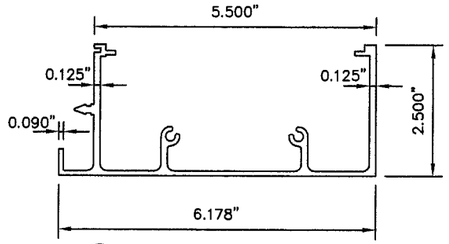

1 FRAME – HEAD/SILL TGF–212

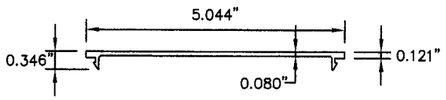

2 FILLER TGF–17

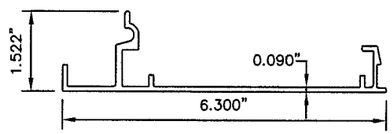

22 JAMB TGF–110

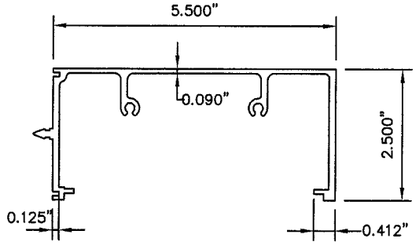

3 INTERMEDIATE TGF–23

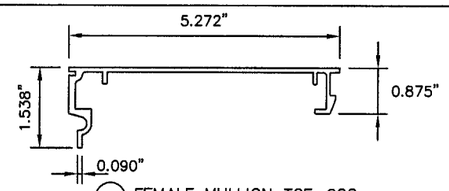

4 FEMALE MULLION TGF–202

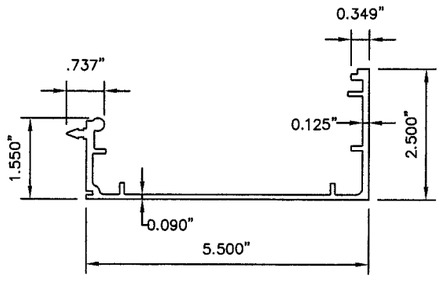

5 MALE MULLION TGF–201

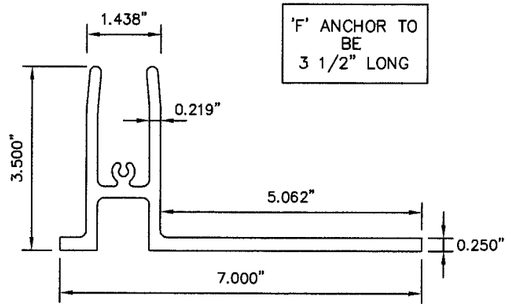

7 ANCHOR "F" TGF–13

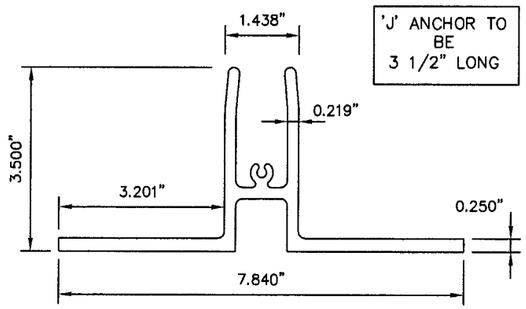

8 ANCHOR "T" TGF–14

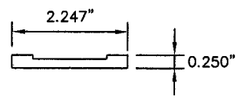

19 END PLATE TGF–104

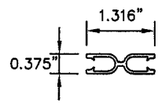

9 COVER CLIP TGF–101

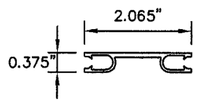

10 COVER CLIP TGF–102

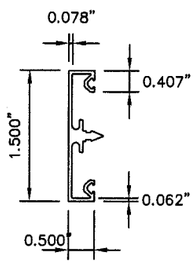

11 COVER TGF–209

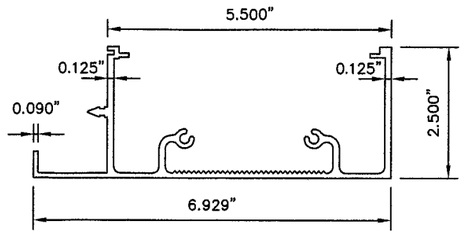

6 FRAME – HEAD/SILL TGF–207

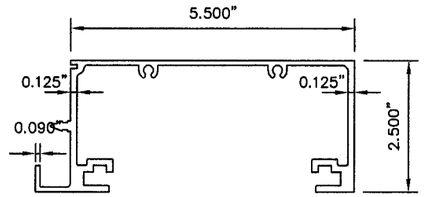

12 FRAME HEAD/SILL TGF–86

ITEM #	PART NUMBER	QUANTITY	DESCRIPTION	MATERIAL	MANF./SUPPLIER/REMARKS
1	TGF-212	AS REQ'D	FRAME HEAD/SILL	ALUM. 6063-T5	TRAINOR GLASS CO.
2	TGF-17	AS REQ'D	FILLER	ALUM. 6063-T5	TRAINOR GLASS CO.
3	TGF-23	AS REQ'D	INTERMEDIATE HORT.	ALUM. 6063-T5	TRAINOR GLASS CO.
4	TGF-202	AS REQ'D	FEMALE MULLION	ALUM. 6063-T6	TRAINOR GLASS CO.
5	TGF-201	AS REQ'D	MALE MULLION	ALUM. 6063-T6	TRAINOR GLASS CO.
6	TGF-207	AS REQ'D	FRAME HEAD/SILL	ALUM. 6063-T5	TRAINOR GLASS CO.
7	TGF-13	1/JAMB	"F" ANCHOR AT JAMBS	ALUM. 6063-T5	TRAINOR GLASS CO.
8	TGF-14	1/MULLION	"T" ANCHOR AT MULLIONS	ALUM. 6063-T5	TRAINOR GLASS CO.
9	TGF-101	AS REQ'D	COVER CLIP	ALUM. 6063-T5	TRAINOR GLASS CO.
10	TGF-102	AS REQ'D	COVER CLIP	ALUM. 6063-T5	TRAINOR GLASS CO.
11	TGF-209	AS REQ'D	COVER	ALUM. 6063-T5	TRAINOR GLASS CO.
12	TGF-86	AS REQ'D	FRAME HEAD/SILL/JAMB	ALUM. 6063-T6	TRAINOR GLASS CO.
13	TR-5796	AS REQ'D	BLOW-OUT GASKET	VINYL	TREMCO- SILICONE COMPAT.
14	TR-6049	AS REQ'D	GLAZING GASKET	NEOPRENE	TREMCO
15	TR-6050	AS REQ'D	GLAZING GASKET	NEOPRENE	TREMCO
16	TGF-22,54,87,213,214	AS REQ'D	"STRAP" ANCHORS	ALUM. 6063-T5	TRAINOR GLASS CO.
17	983/995	AS REQ'D	GLAZING COMPOUND	SILICONE	DOW CORNING
18	TGF-203	AS REQ'D	FRAME HEAD/SILL/JAMB	ALUM. 6063-T6	TRAINOR GLASS CO.
19	TGF-104	2/"T" or "F"	END PLATE	ALUM. 6063-T5	TRAINOR GLASS CO.
20	-	AS REQ'D	CHANNEL 1/2" X 1 1/2"	ALUM. 6063-T5	TRAINOR GLASS CO. 1/8" THK.
21	TGF-15	AS REQ'D	SHEAR BLOCK	ALUM. 6063-T5	TRAINOR GLASS CO.
22	TGF-110	AS REQ'D	JAMB MEMBER	ALUM. 6063-T6	TRAINOR GLASS CO.

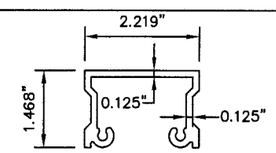

21 SHEAR BLOCK TGF–15

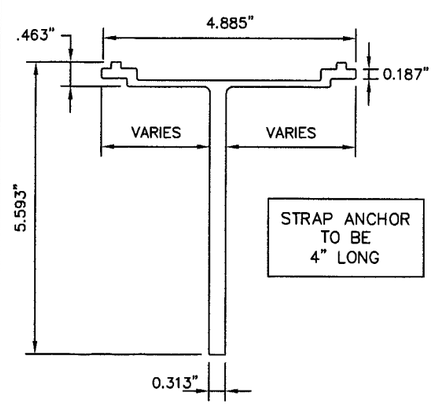

16 "STRAP" ANCHOR TGF–22, 54, 87, 213, 214

18 FRAME HEAD/SILL/JAMB TGF–203

PRODUCT REVISED
as complying with the Florida
Building Code
Acceptance No 10-0728.07
Expiration Date AUG. 25, 2015
By Manuel Sera
Miami Dade Product Control
Division

BROMLEY COOK ENGINEERING, INC.
STRUCTURAL ENGINEERING SERVICES
3440 N.W. 33RD AVENUE SUITE 102
FORT LAUDERDALE, FLORIDA 33309
TEL: (954) 772-0824 FAX: (954) 772-0834

WILLIAM D. COOK No. 43904 STATE OF FLORIDA PROFESSIONAL ENGINEER 2010

WILLIAM D. COOK P.E.
FLA P.E. # 43904
FLA S.I. # 2008

TRAINOR GLASS COMPANY
1101 13th STREET WEST, RIVIERA BEACH, FL 33404
PH. (561) 863-7078 FAX (561) 863-7088
www.trainorglass.com
ATLANTA,GA. CHICAGO,IL. DENVER,CO. ORLANDO, FL. NEWARK, N.J.

REVISIONS

NO.	DATE	BY	

PROJECT NAME: TCW–250P LMR SERIES

LARGE MISSILE IMPACT W/ REINFORCED MULLIONS

DRAWING NUMBER: TCW250P–LMR

SHEET NO. 8 OF 9

DATE: 10/20/10
SCALE: N.T.S.
DRAWN:
CHECKED BY:

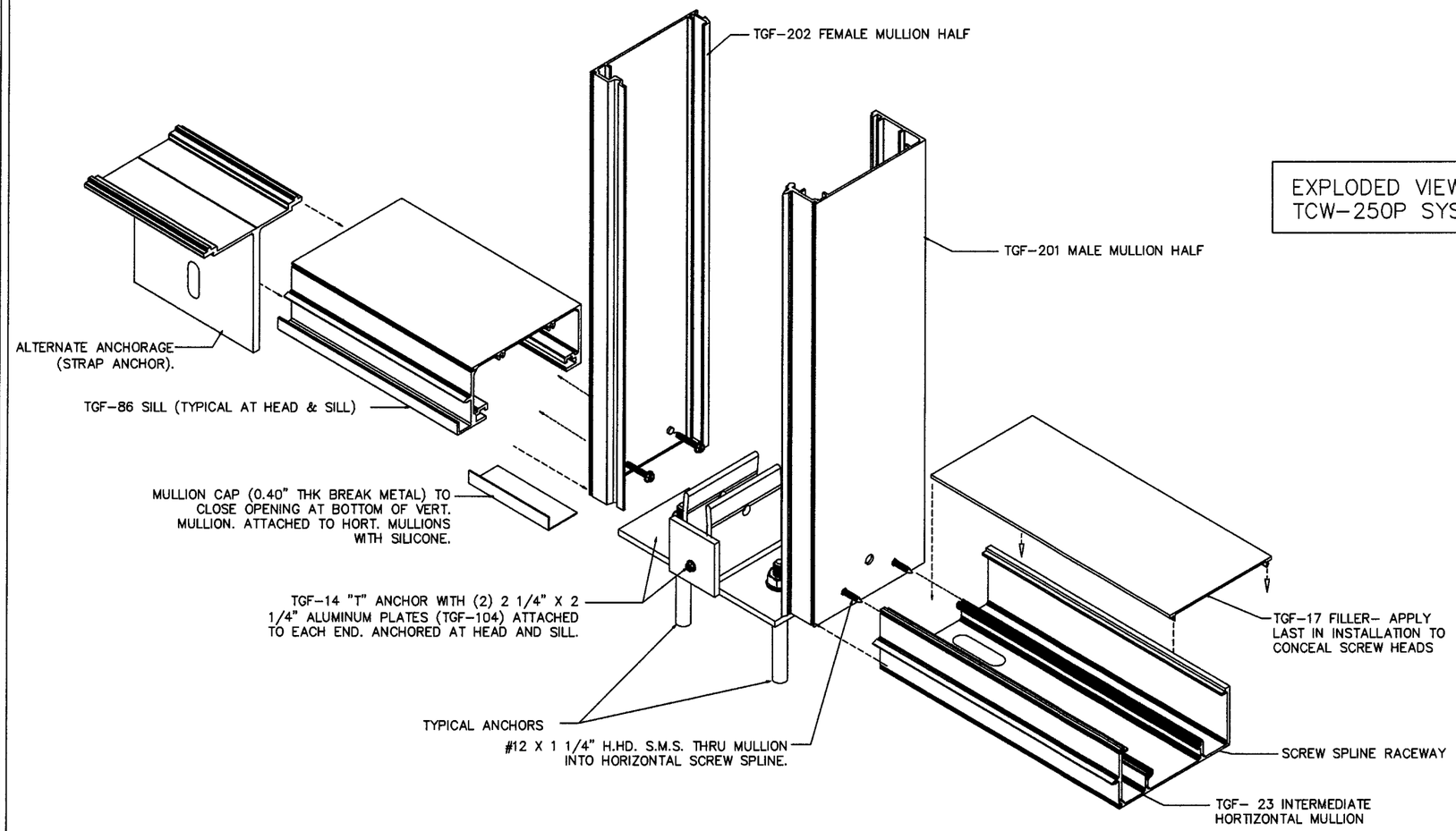

EXPLODED VIEW OF TCW-250P SYSTEM

PRODUCT REVISED
as complying with the Florida Building Code
Acceptance No 10-0728.07
Expiration Date AUG. 25, 2015
By [signature]
Miami Dade Product Control Division

BROMLEY COOK ENGINEERING, INC.
STRUCTURAL ENGINEERING SERVICES
5440 N.W. 33RD AVENUE SUITE 100
FORT LAUDERDALE, FLORIDA 33309
TEL: (954) 772-4624 FAX: (954) 772-4634

WILLIAM D. COOK, P.E.
FLA P.E. # 43904
FLA S.I. # 2008

WILLIAM D. COOK, P.E. LICENSED No 43904 STATE OF FLORIDA PROFESSIONAL ENGINEER
NOV 2 1 2010

TRAINOR GLASS COMPANY
1101 13th STREET WEST, RIVIERA BEACH, FL 33404
PH. (561) 863-7078 FAX (561) 863-7088
www.trainorglass.com
ATLANTA,GA. CHICAGO,IL. DENVER,CO. ORLANDO, FL. NEWARK, N.J.

NO.	DATE	BY	REVISIONS

PROJECT NAME: TCW-250P LMR SERIES

LARGE MISSILE IMPACT W/REINFORCED MULLIONS

DRAWING NUMBER: TCW250P-LMR
SHEET NO. 9 OF 9

DATE: 10/20/10
SCALE: N.T.S.
DRAWN: TOM C.
CHECKED BY: