MIAMI-DADE COUNTY
BUILDING CODE COMPLIANCE OFFICE (BCCO)
PRODUCT CONTROL DIVISION

MIAMI-DADE COUNTY, FLORIDA
METRO-DADE FLAGLER BUILDING
140 WEST FLAGLER STREET, SUITE 1603
MIAMI, FLORIDA 33130-1563
(305) 375-2901 FAX (305) 372-6339
www.miamidade.gov/buildingcode

NOTICE OF ACCEPTANCE (NOA)

Trainor Glass Company
1101 13th Street
Riviera Beach, FL 33404

SCOPE:

This NOA is being issued under the applicable rules and regulations governing the use of construction materials. The documentation submitted has been reviewed by Miami-Dade County Product Control Division and accepted by the Board of Rules and Appeals (BORA) to be used in Miami Dade County and other areas where allowed by the Authority Having Jurisdiction (AHJ).

This NOA shall not be valid after the expiration date stated below. The Miami-Dade County Product Control Division (In Miami Dade County) and/or the AHJ (in areas other than Miami Dade County) reserve the right to have this product or material tested for quality assurance purposes. If this product or material fails to perform in the accepted manner, the manufacturer will incur the expense of such testing and the AHJ may immediately revoke, modify, or suspend the use of such product or material within their jurisdiction. BORA reserves the right to revoke this acceptance, if it is determined by Miami-Dade County Product Control Division that this product or material fails to meet the requirements of the applicable building code. This product is approved as described herein, and has been designed to comply with the Florida Building Code, including the High Velocity Hurricane Zone.

DESCRIPTION: Series "TCW-250 TS" Aluminum Curtain Wall System w/Reinforced Mullion – L.M.I.

APPROVAL DOCUMENT: Drawing No. **TCW250TSLMI,** titled "TCW 250TS Series – Large Missile Impact W/Reinforced Mullions", sheets 1 through 15 of 15, dated 11/09/10, prepared by manufacturer, signed and sealed by William D. Cook, P.E., bearing the Miami-Dade County Product Control Revision stamp with the Notice of Acceptance number and expiration date by the Miami-Dade County Product Control Division.

MISSILE IMPACT RATING: Large and Small Missile Impact Resistant

LABELING: Each unit shall bear a permanent label with the manufacturer's name or logo, city, state and following statement: "Miami-Dade County Product Control Approved", unless otherwise noted herein.

RENEWAL of this NOA shall be considered after a renewal application has been filed and there has been no change in the applicable building code negatively affecting the performance of this product.

TERMINATION of this NOA will occur after the expiration date or if there has been a revision or change in the materials, use, and/or manufacture of the product or process. Misuse of this NOA as an endorsement of any product, for sales, advertising or any other purposes shall automatically terminate this NOA. Failure to comply with any section of this NOA shall be cause for termination and removal of NOA.

ADVERTISEMENT: The NOA number preceded by the words Miami-Dade County, Florida, and followed by the expiration date may be displayed in advertising literature. If any portion of the NOA is displayed, then it shall be done in its entirety.

INSPECTION: A copy of this entire NOA shall be provided to the user by the manufacturer or its distributors and shall be available for inspection at the job site at the request of the Building Official.

This NOA **revises and renews NOA # 05-0624.07** and consists of this page 1 and Evidence pages E-1 and E-2, as well as approval document mentioned above.

The submitted documentation was reviewed by **Manuel Perez, P.E.**

MIAMI-DADE COUNTY APPROVED

Trainor Glass Company

NOTICE OF ACCEPTANCE: EVIDENCE SUBMITTED

A. DRAWINGS

1. Manufacturer's die drawings and sections.
2. Drawing No. **TCW250TSLMI,** titled "TCW 250TS Series – Large Missile Impact W/Reinforced Mullions", sheets 1 through 15 of 15, dated 10/09/10, prepared by manufacturer, signed and sealed by William D. Cook, P.E.

B. TESTS

1. Test reports on: 1) Air Infiltration Test, per FBC, TAS 202-94
   2) Uniform Static Air Pressure Test, Loading per FBC, TAS 202-94
   3) Water Resistance Test, per FBC, TAS 202-94
   4) Large Missile Impact Test per FBC, TAS 201-94
   5) Cyclic Wind Pressure Loading per FBC, TAS 203-94

   along with installation diagram of a series TCW 250-TS aluminum curtain wall system, marked-up by Hurricane Test Laboratory, LLC Test Report No. **HTL-0062-1113-03**, dated 11/19-12/15/03, signed and sealed by Vinu J. Abraham, P.E. ***(Submitted under previous NOA #05-0624.07)***

C. CALCULATIONS

1. Anchor verification calculations and structural analysis, complying with FBC-2007, prepared by Bromley-Cook Engineering, dated 11/09/10, signed and sealed by William D. Cook, P.E.
   Complies with ASTM E1300-04

D. QUALITY ASSURANCE

1. Miami Dade Building Code Compliance Office (BCCO).

E. MATERIAL CERTIFICATIONS

1. Notice of Acceptance No. **07-1116.04** issued to **E.I. DuPont DeNemours & Co.**, Inc. for their "**DuPont SentryGlas ® Plus**" dated 01/03/08, expiring on 01/14/12.
2. Notice of Acceptance No. **08-0206.01** issued to **Solutia, Inc.** for their "**Saflex HP Glass Interlayer**" dated 04/17/08, expiring on 04/14/13.
3. Notice of Acceptance No. **08-0520.08** issued to **Solutia, Inc.** for their "**Vanceva Composites Glass Interlayer**" dated 07/17/08, expiring on 12/11/13.
4. Notice of Acceptance No. **10-0201.01** issued to **Viracon, Inc.** for their "**Viracon HRG-2 Glass Interlayer**", dated 03/24/10, expiring on 02/12/14.

Manuel Perez, P.E.
Product Control Examiner
NOA No. 10-0728.11
Expiration Date: October 20, 2015
Approval Date: February 10, 2011

NOTICE OF ACCEPTANCE: EVIDENCE SUBMITTED

F. STATEMENTS

1. Statement letter of conformance and no financial interest, 11/08/10, signed and sealed by William W. Cook, P.E.
2. Statement letter of no financial interest, dated 11/08/10, signed and sealed by William W. Cook, P.E.
3. Laboratory compliance letter for Test Report No. **HTL-0062-1113-03**, issued by Hurricane Test Laboratory, LLC, dated November 3, 2004, signed and sealed by Vinu J. Abraham, P.E.
   (Submitted under previous NOA #05-0624.07)

G. OTHERS

1. Notice of Acceptance No. **05-0624.07**, issued to Trainor Glass Company for their Series TCW250 TS Aluminum Curtain Wall System – L.M.I., approved on 10/20/05 and expiring on 10/20/10.

Manuel Perez, P.E.
Product Control Examiner
NOA No. 10-0728.11
Expiration Date: October 20, 2015
Approval Date: February 10, 2011

TCW-250TS SERIES
WINDOW WALL SYSTEM
W/ REINFORCED MULLIONS
(LARGE MISSILE IMPACT)

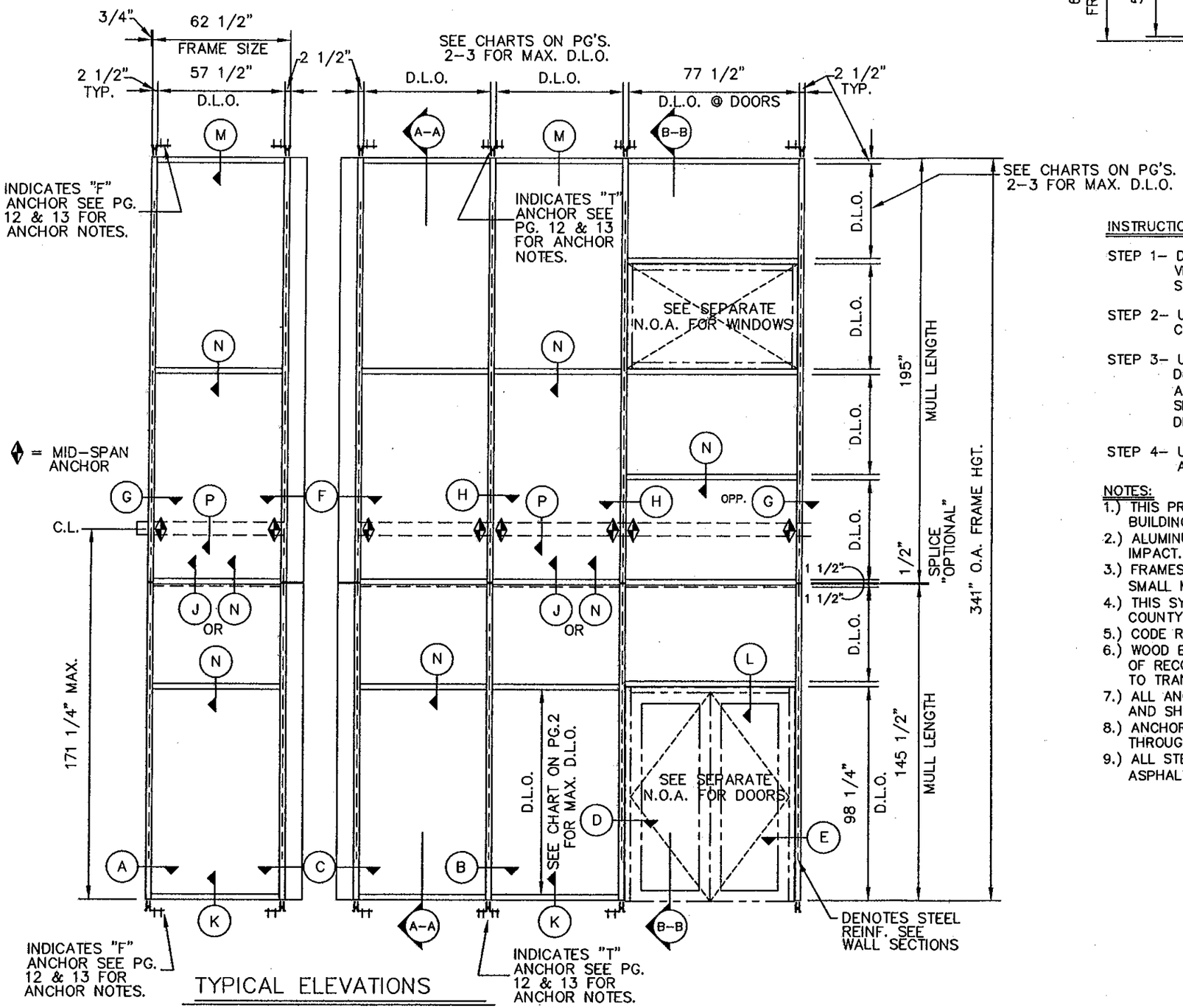

TYPICAL ELEVATIONS

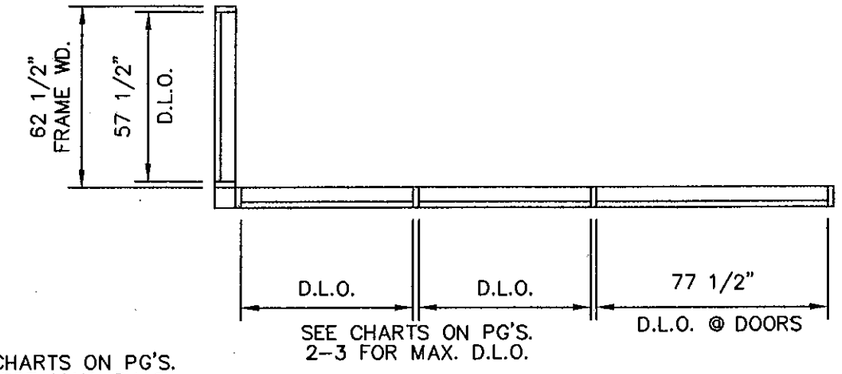

FLOOR PLAN

INSTRUCTIONS:

STEP 1– DETERMINE DESIGN WIND LOAD REQUIREMENT BASED ON WIND VELOCITY, BLDG. HEIGHT, AND WIND ZONE USING APPLICABLE STANDARDS FROM ASCE 7.

STEP 2– USE CHARTS ON SHEETS 2 AND 3 TO DETERMINE DESIGN LOAD CAPACITY OF DESIRED GLASS SIZE AND TYPE.

STEP 3– USE CHARTS ON SHEET 4 TO DETERMINE ALLOWABLE DESIGN PRESSURE BASED ON GIVEN MULLION LENGTH AND ANCHOR SPACING. (THE MAXIMUM ALLOWABLE DESIGN PRESSURE SHOULD BE EQUAL TO OR GREATER THAN THE DSIGN PRESSURE DETERMINED FOR THE OPENING).

STEP 4– USE DEATAILS AND CHARTS ON SHEETS 12 AND 13 TO DETERMINE ANCHOR OPTIONS BASED ON SUBSTRATE AND LOADING

NOTES:

1.) THIS PRODUCT IS DESIGNED TO COMPLY WITH THE 2007 FLORIDA BUILDING CODE INCLUDING THE HIGH VELOCITY HURRICANE ZONE
2.) ALUMINUM WINDOW WALL SYSTEM IS TESTED FOR LARGE MISSILE IMPACT. HURRICANE SHUTTERS ARE NOT REQUIRED.
3.) FRAMES INSTALLED 30' ABOVE GRADE OR HIGHER SHALL BE SMALL MISSILE IMPACT RESISTANT. (NO HURRICANE SHUTTERS)
4.) THIS SYSTEM MAY BE USED IN CONJUNCTION WITH MIAMI-DADE COUNTY APPROVED ENTRANCE DOORS AND OR WINDOWS.
5.) CODE REQUIREMENTS FOR SAFEGUARDS MUST BE OBSERVED.
6.) WOOD BUCKS MUST BE ENGINEERED SEPERATELY BY THE ENGINEER OF RECORD AND SHALL BE ANCHORED TO THE STRUCTURE PROPERLY TO TRANSFER LOADS TO THE STRUCTURE.
7.) ALL ANCHORS SHALL BE AS LISTED IN ANCHOR NOTES & CHARTS AND SHALL BE LOCATED AS DETAILED HEREIN.
8.) ANCHOR EMBEDMENT INTO BASE MATERIAL (SUBSTRATE) SHALL BE THROUGH WALL DRESSING, WOOD BUCKS AND OR STUCCO.
9.) ALL STEEL IN CONTACT WITH ALUMINUM OR CONC. SHALL BE PAINTED WITH ASPHALTIC/BITUMINUOUS COATING AS PER FBC 2003.8.4.1

PRODUCT REVISED
as complying with the Florida Building Code
Acceptance No 16-0728.11
Expiration Date Oct 20, 2015
By
Miami Dade Product Control

BROMLEY COOK ENGINEERING, INC.
STRUCTURAL ENGINEERING SERVICES
5440 N.W. 33RD AVENUE SUITE 100
FORT LAUDERDALE, FLORIDA 33309
TEL. (954) 772-4624 FAX (954) 772-4634

STATE OF FLORIDA PROFESSIONAL ENGINEER 43904
JAN 2 2009
WILLIAM D. COOK P.E.
FLA P.E. # 43904
FLA S.I. # 2008

TRAINOR GLASS COMPANY
1101 13th STREET WEST, RIVIERA BEACH, FL 33404
PH. (561) 863-7078 FAX (561) 863-7088
www.trainorglass.com
ATLANTA,GA. CHICAGO,IL. DENVER,CO. ORLANDO, FL. NEWARK, NJ.

NO.	DATE	BY	REVISIONS

PROJECT NAME: TCW 250TS SERIES

LARGE MISSILE IMPACT W/REINFORCED MULLIONS

DRAWING NUMBER: TCW250TSLMI

SHEET NO. 1 of 15

DATE: 11/09/10
SCALE: NOTED
DRAWN: TOM C.
CHECKED BY:

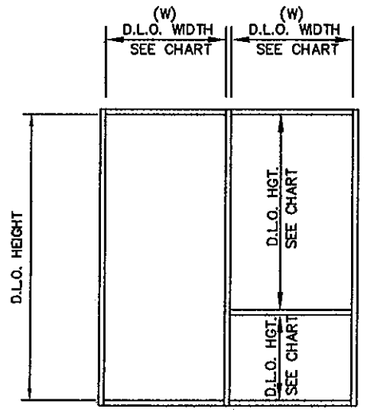

GLASS SCHEDULE (L.M.I.)

TYPE	NOMINAL THCKNSS	DESCRIPTION		MISSILE TYPE
G-1	9/16"	LAMINATED GLASS (VISION OR SPANDREL)	1/4" HS OUTBOARD 0.100" SOLUTIA H.P. INTERLAYER 1/4" HS INBOARD	LARGE
G-2	9/16"	LAMINATED "VANCEVA STORM"	1/4" HS OUTBOARD 0.075" INTERLAYER 1/4" HS INBOARD	LARGE
G-3	5/8"	LAMINATED "HRG-2"	1/4" HS OUTBOARD/0.050" URETHANE/0.080" POLYCARB 0.050" URETHANE/1/4" HS INBOARD	LARGE
G-4	9/16"	LAMINATED "SENTRYGLAS PLUS"	1/4" HS OUTBOARD 0.090" INTERLAYER 1/4" HS INBOARD	LARGE
G-5	1 3/8"	INSULATED "HRG-2"	1/4" TEMP. OUTBOARD / 1/2" AIRSPACE 1/4" HS/0.050" URETHANE/0.080" POLYCARB/0.050" URETHANE 1/4" HS INBOARD	LARGE
G-6	1 5/16"	INSULATED LAMINATED GLASS (VISION OR SPANDREL)	1/4" TEMP. OUTBOARD / 1/2" AIRSPACE 1/4" HS/0.100" SOLUTIA HP INTERLAYER/ 1/4" HS INBOARD	LARGE

OPTIONAL: 6mm THK. COMPOSITE ALUMINUM PANEL IN LIEU OF GLAZING. (COMPOSITION: 030" ALUM. SHEET – 3/16" PLYWOOD – .030" ALUM. SHEET)

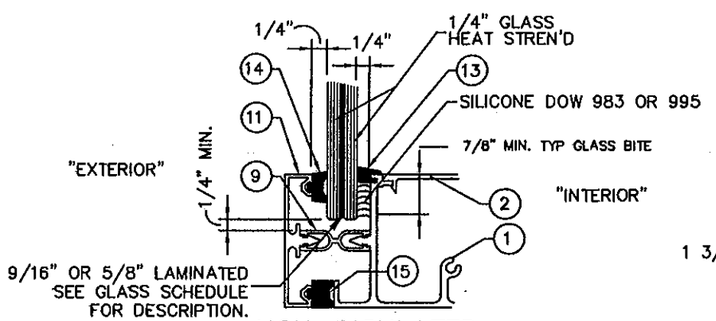

NON-INSULATED

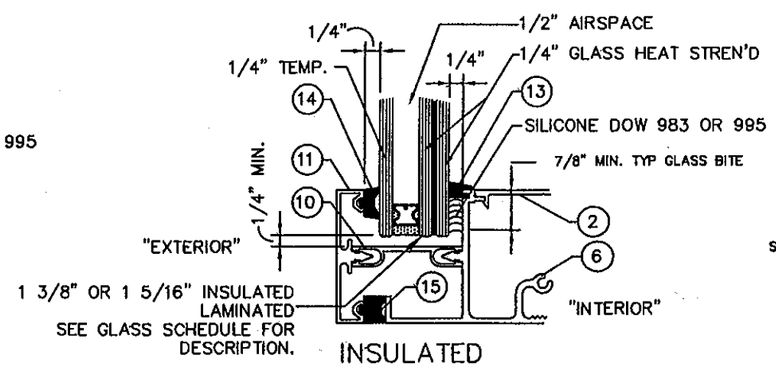

INSULATED

GLAZING DETAILS

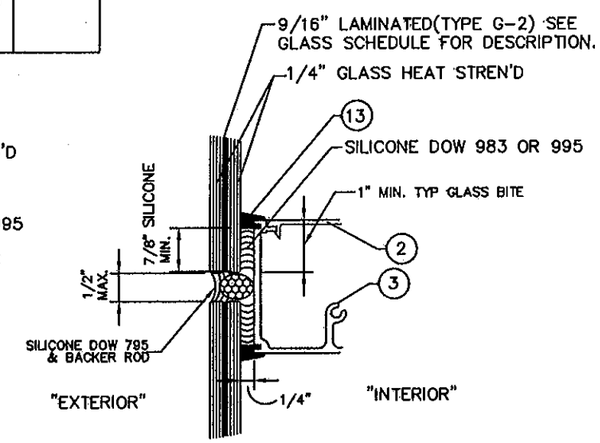

BUTT JOINT
STRUCTURAL GLAZED

PRODUCT REVISED
as complying with the Florida Building Code
Acceptance No 10-0728.01
Expiration Date Oct. 29, 2015
By Miami-Dade Product Control

WILLIAM D. COOK
STATE OF FLORIDA
PROFESSIONAL ENGINEER
JAN 24, 2011

BROMLEY COOK ENGINEERING, INC.
STRUCTURAL ENGINEERING SERVICES
7440 N.W. 33RD AVENUE SUITE 100
FORT LAUDERDALE, FLORIDA 33309
TEL: (954) 772-4624 FAX: (954) 772-4634
WILLIAM D. COOK P.E.
FLA P.E. # 43904
FLA S.I. # 2008

GLASS COMPANY

TRAINOR

REVISIONS

NO.	DATE	BY

PROJECT NAME: TCW 250TS SERIES

LARGE MISSILE IMPACT W/REINFORCED MULLIONS

DRAWING NUMBER: TCW250TSLMI

SHEET NO. 2 of 15

DATE: 11/09/10

SCALE: NOTED

DRAWN: TOM C.

CHECKED BY:

GLASS LOAD CAPACITY (L.M.I.) – P.S.F.

NOMINAL DIM'S.		LAMINATED GLASS GLASS TYPE: G1, G4		LAMINATED GLASS STRUCTURALLY GLAZED GLASS TYPE: G2		LAMINATED GLASS GLASS TYPE: G3		LAMINATED–INSULATED GLASS TYPE: G5		LAMINATED–INSULATED GLASS TYPE: G6	
D.L.O. WIDTH	D.L.O. HEIGHT	EXT. (+)	EXT. (–)	EXT. (+)	EXT. (–)	EXT. (+)	EXT. (–)	EXT. (+)	EXT. (–)	EXT. (+)	EXT. (–)
42"	81"	80	110	80	102	80	90	80	95	80	110
45"		80	110	80	102	80	90				
48"		80	110	80	102	80	90				
51"		80	110	80	102	80	90				
54"		80	110	80	102	80	90				
57"		80	110	80	102	80	90				
60"		80	110	80	100	80	90				
63"		80	109	80	98	80	90				
66"		80	107	80	95	80	90				
42"	84"	80	110	80	102	80	90				
45"		80	110	80	102	80	90				
48"		80	110	80	102	80	90				
51"		80	110	80	102	80	90				
54"		80	110	80	102	80	90				
57"		80	107	80	102	80	90				
60"		80	105	80	100	80	90				
64"		80	102	80	96	80	90				
42"	87"	80	110	80	102	80	90				
45"		80	110	80	102	80	90				
48"		80	110	80	102	80	90				
51"		80	110	80	102	80	90				
54"		80	105	80	102	80	90				
57"		80	102	80	102	80	90				
60"		80	99	80	100	80	90				
62"		80	98	80	98	80	90				
39"	90"	80	110	80	102	80	90				
42"		80	110	80	102	80	90				
45"		80	110	80	102	80	90				
48"		80	107	80	102	80	90				
51"		80	103	80	102	80	90				
54"		80	100	80	102	80	90				
57"		80	97	80	102	80	90				
60"		80	94	80	100	80	90				
38"	93"	80	110	80	102	80	90				
39"		80	110	80	102	80	90				
42"		80	110	80	102	80	90				
45"		80	107	80	102	80	90				
48"		80	102	80	102	80	90				
51"		80	98	80	102	80	90				
54"		80	95	80	102	80	90				
58"		80	91	80	102	80	90				

GLASS LOAD CAPACITY (L.M.I.) – P.S.F.

NOMINAL DIM'S.		LAMINATED GLASS GLASS TYPE: G1, G4		LAMINATED GLASS STRUCTURALLY GLAZED GLASS TYPE: G2		LAMINATED GLASS GLASS TYPE: G3		LAMINATED–INSULATED GLASS TYPE: G5		LAMINATED–INSULATED GLASS TYPE: G6	
D.L.O. WIDTH	D.L.O. HEIGHT	EXT. (+)	EXT. (–)	EXT. (+)	EXT. (–)	EXT. (+)	EXT. (–)	EXT. (+)	EXT. (–)	EXT. (+)	EXT. (–)
39"	95"	80	110	80	102	80	90	80	95	80	110
42"		80	109	80	102	80	90				
45"		80	104	80	102	80	90				
48"		80	99	80	102	80	90				
51"		80	96	80	102	80	90				
54"		80	92	80	102	80	90				
56"		80	90	80	102	80	90				
36"	99"	80	110	80	102	80	90				
39"		80	109	80	102	80	90				
42"		80	103	80	102	80	90				
45"		80	98	80	102	80	90				
48"		80	94	80	102	80	90				
51"		80	90	80	102	80	90				
54"		80	90	80	102	80	90				
36"	102"	80	110	80	102	80	90				
39"		80	105	80	102	80	90				
42"		80	100	80	102	80	90				
45"		80	95	80	102	80	90				
48"		80	90	80	102	80	90				
51"		80	90	80	102	80	90				
53"		80	90	80	102	80	90				
36"	105"	80	108	80	102	80	90				
39"		80	102	80	102	80	90				
42"		80	96	80	102	80	90				
45"		80	91	80	102	80	90				
48"		80	90	80	102	80	90				
51"		80	90	80	102	80	90				
36"	108"	80	105	80	102	80	90				
39"		80	98	80	102	80	90				
42"		80	93	80	102	80	90				
45"		80	90	80	102	80	90				
48"		80	90	80	102	80	90				
50"		80	90	80	102	80	90				
36"	111"	80	101	80	102	80	90				
39"		80	95	80	102	80	90				
42"		80	90	80	102	80	90				
45"		80	90	80	102	80	90				
48"		80	90	80	102	80	90				
36"	114"	80	98	80	102	80	90				
39"		80	92	80	102	80	90				
42"		80	90	80	102	80	90				
45"		80	90	80	102	80	90				
47"		80	90	80	102	80	90				

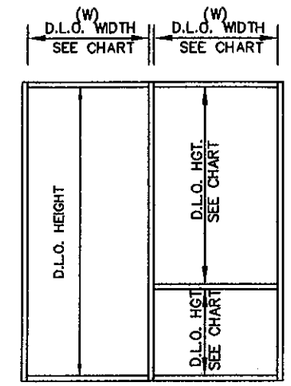

PRODUCT REVISED
as complying with the **Florida**
Building Code
Acceptance No 10-0728.11
Expiration Date Oct. 20, 2015
By Manuel Perez
Miami Dade Product Control

BROMLEY · COOK · ENGINEERING, INC.
STRUCTURAL ENGINEERING SERVICES
5440 N.W. 33RD AVENUE, SUITE 100
FORT LAUDERDALE, FLORIDA 33309
TEL: (954) 772-4824 FAX: (954) 772-4634
WILLIAM D. COOK P.E.
FLA. R.E.I. # 43904
FLA S.I. # 2008

WILLIAM D. COOK · 43904 · STATE OF FLORIDA · PROFESSIONAL ENGINEER
JAN 24 2011

GLASS COMPANY
1101 13th STREET WEST, RIVIERA BEACH, FL 33404
PH. (561) 863-7078 FAX (561) 863-7088
www.trainorglass.com
TRAINOR
ATLANTA,GA. CHICAGO,IL. DENVER,CO. ORLANDO, FL. NEWARK, NJ.

NO.	DATE	BY	REVISIONS

PROJECT NAME: TCW 250TS SERIES

LARGE MISSILE IMPACT W/REINFORCED MULLIONS

DATE: 11/09/10
SCALE: NOTED
DRAWN: TOM. C.
CHECKED BY:
DRAWING NUMBER: TCW250TSLMI
SHEET NO. 3 of 15

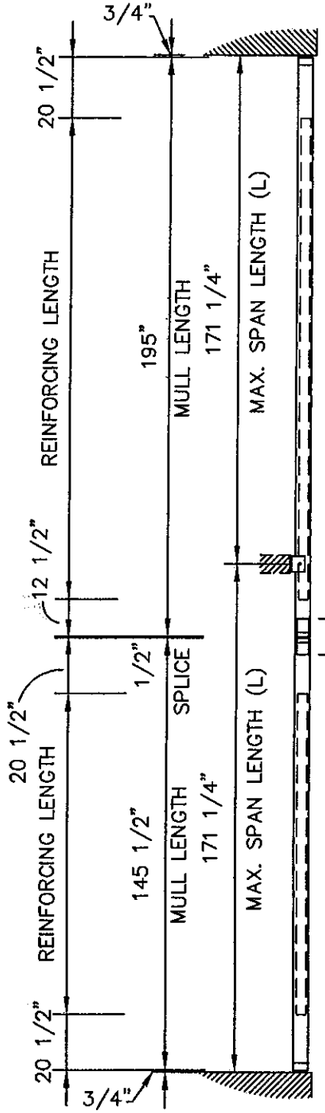

SECTION "A–A"

STACKED MULLION
W/ SPLICE

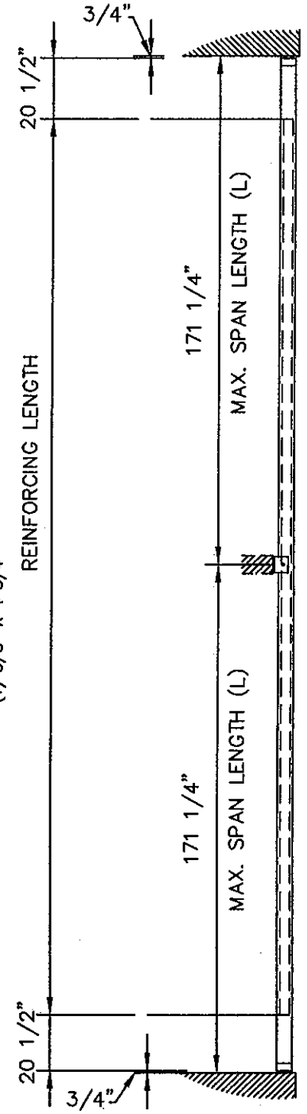

SECTION "B–B"

TWIN SPAN MULLION
NO SPLICE

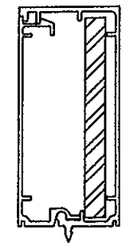

JAMB MULLION ① TGF-201/202

REINFORCING: 1/2" X 5" STEEL BAR (A36)

ALUMINUM: $I_{xx} = 9.33\ in^4$, $S_{xx} = 3.39\ in^3$

STEEL: (NOT CONVERTED) $I_{xx} = 5.21\ in^4$, $S_{xx} = 2.08\ in^3$

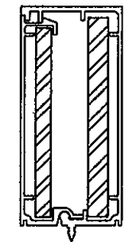

MULLION ② TGF-201/202

REINFORCING: 1/2" X 5" & 3/8" X 4 3/4" STEEL BAR (A36)

ALUMINUM: $I_{xx} = 9.33\ in^4$, $S_{xx} = 3.39\ in^3$

STEEL: (NOT CONVERTED) $I_{xx} = 8.56\ in^4$, $S_{xx} = 3.49\ in^3$

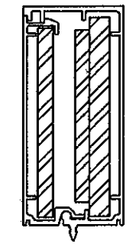

MULLION ③ TGF-201/202

REINFORCING: 1/2" X 5" W/ 1/4 X 3 1/2" (WELDED) & 3/8" X 4 3/4" STEEL BAR (A36)

ALUMINUM: $I_{xx} = 9.33\ in^4$, $S_{xx} = 3.39\ in^3$

STEEL: (NOT CONVERTED) $I_{xx} = 9.45\ in^4$, $S_{xx} = 4.00\ in^3$

JAMB & MULLION LOAD CAPACITY – P.S.F.
(REINFORCED MULLIONS)

NOMINAL DIM'S.		① TWIN SPAN JAMB		① STACKED JAMB		② TWIN SPAN MULLION		② STACKED MULLION		③ TWIN SPAN MULLION		③ STACKED MULLION	
WIDTH (W)	MULLION SPAN (L)	EXT. (+)	EXT. (–)	EXT. (+)	EXT. (–)	EXT. (+)	EXT. (–)	EXT. (+)	EXT. (–)	EXT. (+)	EXT. (–)	EXT. (+)	EXT. (–)
48"	171 1/4" MAX.	80	95	80	95	80	91.5	80	95	80	95	80	95
54"						80	81.5	80	95	80	87.5		
60"						73.5	73.5	80	95	79	79		
62"						70.5	70.5	80	92	76	76		
68"		80	93			64.5	64.5	80	84	69.5	69.5		
74"		80	85			59	59	77	77	67	67		90
80"		79.5	79.5	60	95	55	55	71.5	71.5	62	62	60	65

L= SPAN BETWEEN SUPPORTS/ANCHOR POINTS

CHART DATA IS BASED ON MAXIMUM TESTED LENGTH. FOR SHORTER SPANS, ENGINEERED CALCULATIONS SHALL BE PROVIDED ON A JOB SPECIFIC BASIS.

SEE PAGE 12 & 13 FOR ANCHOR TYPES & OPTIONS.

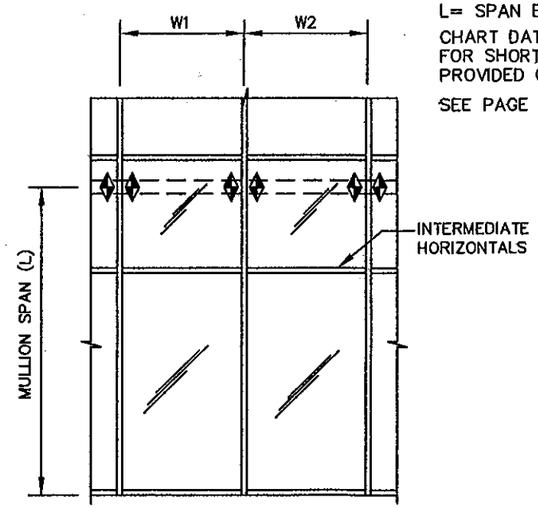

$$WIDTH\ (W) = \frac{W1 + W2}{2}$$

PRODUCT REVISED
as complying with the Florida
Building Code
Acceptance No 10-0728.11
Expiration Date Oct. 20, 2015
By Miami/Dade Product Control

BROMLEY COOK ENGINEERING, INC.
STRUCTURAL ENGINEERING SERVICES
5440 N.W. 33RD AVENUE SUITE 100
FORT LAUDERDALE, FLORIDA 33309
TEL: (954) 772-4624 FAX: (954) 772-4634

STATE OF FLORIDA PROFESSIONAL ENGINEER LICENSE No 43904 WILLIAM D. COOK
JAN 24 2011

GLASS COMPANY
1101 13th STREET WEST, RIVIERA BEACH, FL 33404
PH. (561) 863-7078 FAX (561) 863-7088
www.trainorglass.com
ATLANTA, GA. CHICAGO, IL DENVER, CO. ORLANDO, FL NEWARK, NJ.

TRAINOR

NO.	DATE	BY	REVISIONS

PROJECT NAME: TCW 250TS SERIES

LARGE MISSILE IMPACT W/REINFORCED MULLIONS

DRAWING NUMBER: TCW250TSLMI

SHEET NO. 4 OF 15

DATE: 11/09/10
SCALE: NOTED
DRAWN: TOM C.
CHECKED BY:

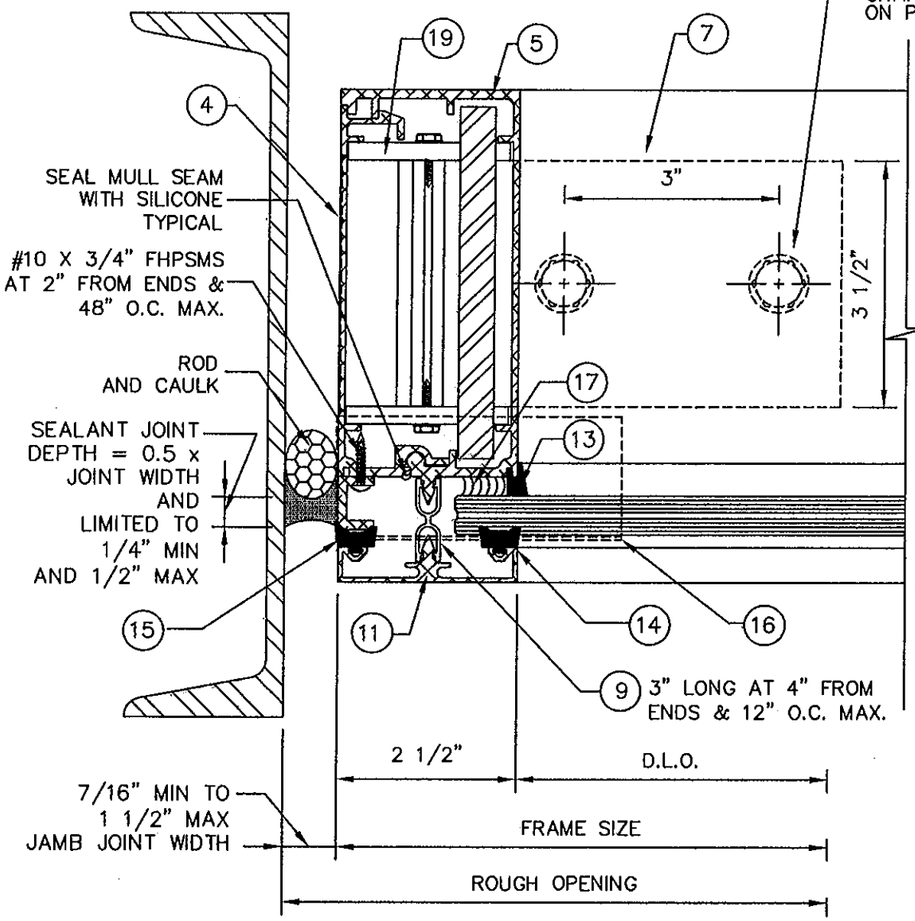

A JAMB

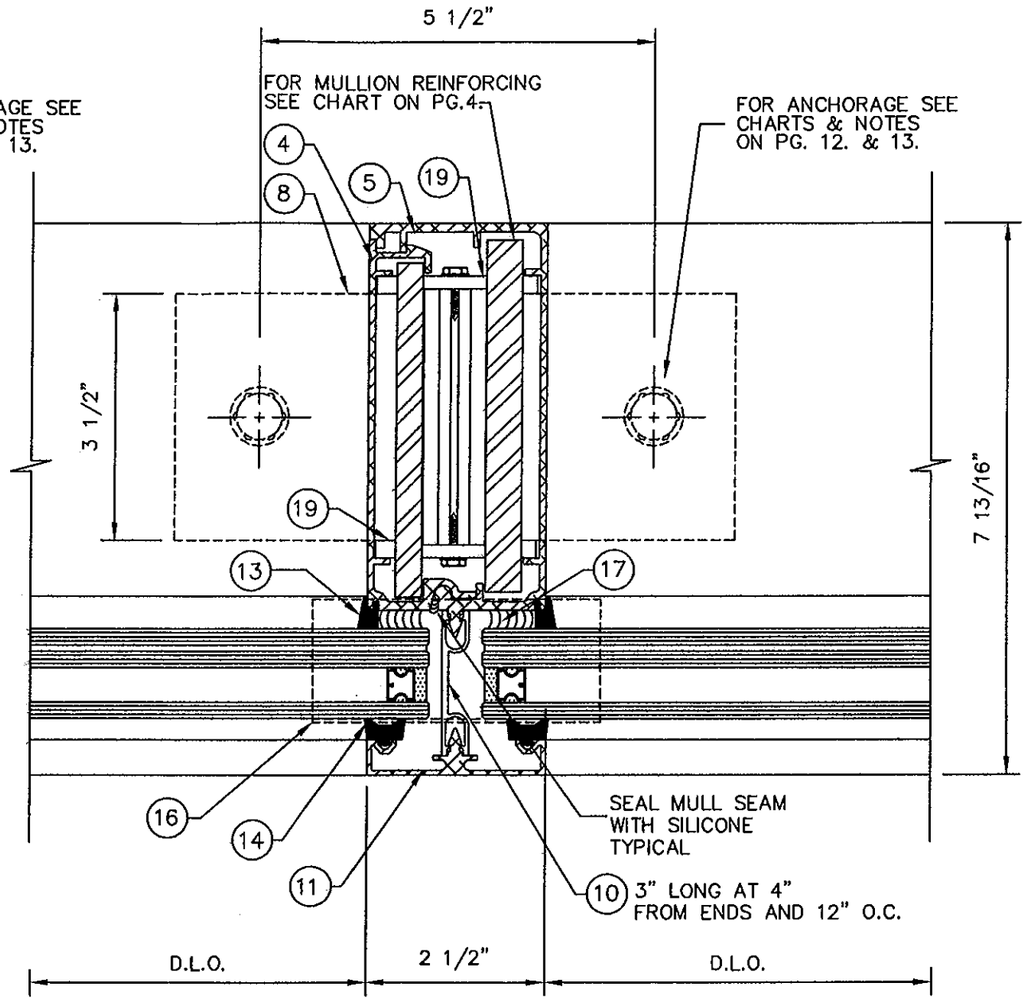

B MULLION

JAMB SEALANT NOTES:

PERIMETER SEALANT OPTIONS:
DOW-CORNING 795 SILICONE

ALTERNATE SEALANTS AND JAMB GAPS:
TO BE APPROVED BY DESIGN PROFESSIONAL OF RECORD AND SEALANT MANUFACTURER

SEALANT NOTES:

GLAZING BEAD AT FRAME SEALED TO GLASS WITH DOW CORNING 983/995

FRAME PERIMETER TO STRUCTURE SEALED WITH DOW CORNING 795

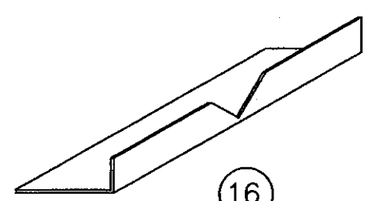

16

.040" ALUM. BOTTOM MULL CAP
4" LONG
(ATTACHED WITH SILICONE)

PRODUCT REVISED
as complying with the Florida
Building Code
Acceptance No 10-0728.11
Expiration Date Oct. 20, 2015
By
Miami Dade Product Control

BROMLEY COOK ENGINEERING, INC.
STRUCTURAL ENGINEERING SERVICES
6440 N.W. 33RD AVENUE, SUITE 100
FORT LAUDERDALE, FLORIDA 33309
TEL. (954) 772-4623 FAX. (954) 772-4634

STATE OF FLORIDA
WILLIAM G. COOK
LICENSE
No 43904
PROFESSIONAL ENGINEER

DATE 8-4-2011

WILLIAM G. COOK P.E.
FLA. R.E. # 43904
FLA S.I. # 2008

TRAINOR GLASS COMPANY
1101 13th STREET WEST, RIVIERA BEACH, FL 33404
PH. (561) 863-7078 FAX (561) 863-7088
www.trainorglass.com
ATLANTA, GA. CHICAGO, IL. DENVER, CO. ORLANDO, FL. NEWARK, N.J.

NO.	DATE	BY	REVISIONS

PROJECT NAME: TCW-250TS SERIES

LARGE MISSILE IMPACT W/ REINFORCED MULLIONS

DATE: 11/09/10
SCALE: NOTED
DRAWING: TOM C.
CHECKED BY:
DRAWING NUMBER: TCW250TSLMI
SHEET NO. 5 OF 15

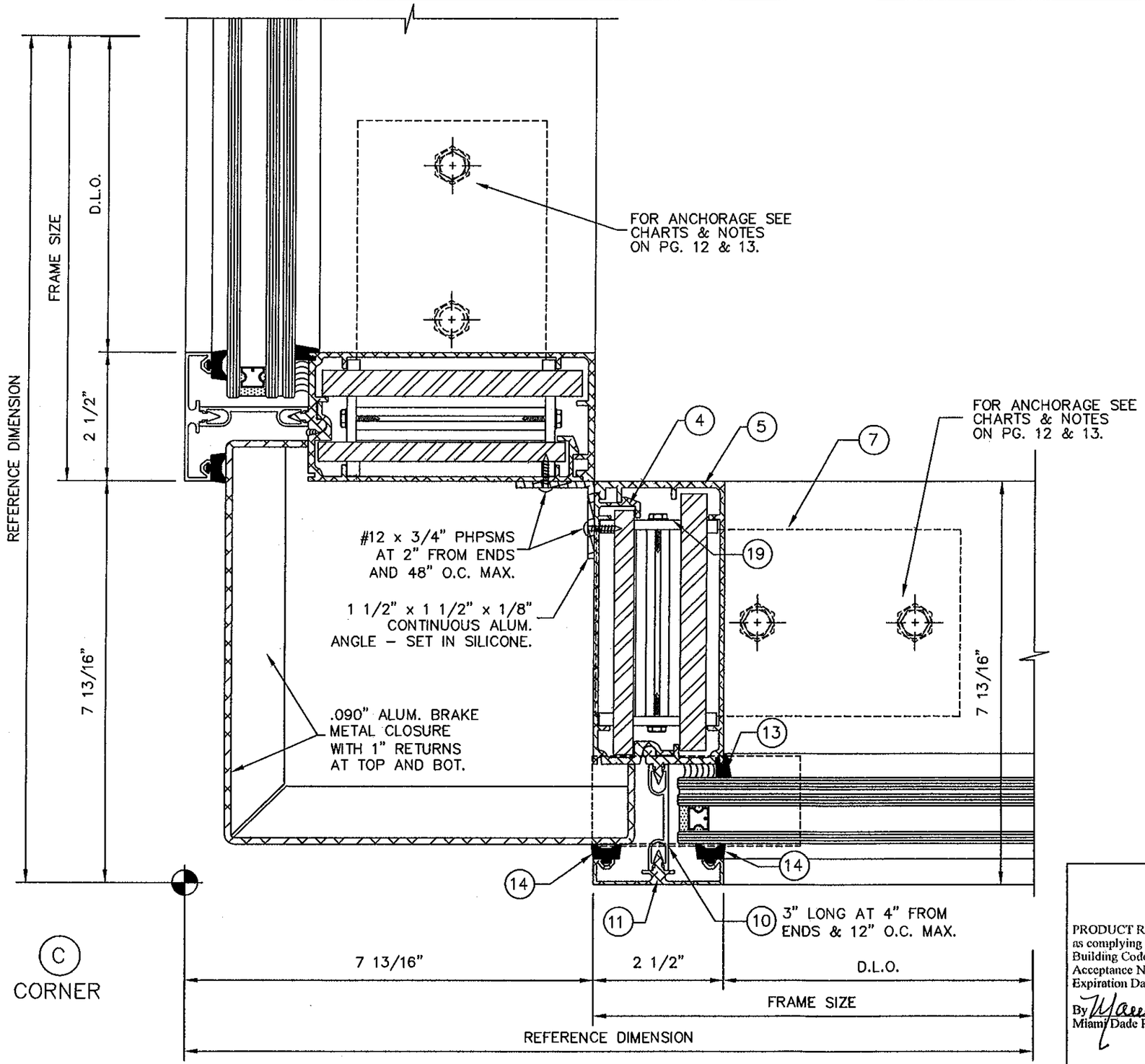

PRODUCT REVISED
as complying with the Florida
Building Code
Acceptance No 10-0728.11
Expiration Date Oct. 20, 2015
By Manuel Perez
Miami Dade Product Control

BROMLEY COOK ENGINEERING, INC.
STRUCTURAL ENGINEERING SERVICES
5440 N.W. 33RD AVENUE SUITE 100
FORT LAUDERDALE, FLORIDA 33309
TEL (954) 772-4824 FAX (954) 772-4834

LICENSE NO 43904 STATE OF FLORIDA PROFESSIONAL ENGINEER
JAN 2 4 2011
WILLIAM D. COOK P.E.
FL(P.E.) # 43904
FL(A.S.I.) # 2008

TRAINOR GLASS COMPANY
1101 13th STREET WEST, RIVIERA BEACH, FL 33404
PH. (561) 863-7078 FAX (561) 863-7088
www.trainorglass.com
ATLANTA, GA. CHICAGO, IL. DENVER, CO. ORLANDO, FL NEWARK, N.J.

NO.	DATE	BY	REVISIONS

PROJECT NAME: TCW-250TS SERIES

LARGE MISSILE IMPACT W/ REINFORCED MULLIONS

DRAWING NUMBER: TCW250TSLMI
SHEET NO. 6 OF 15

DATE: 11/09/10
SCALE: NOTED
DRAWN: TOM C.
CHECKED BY:

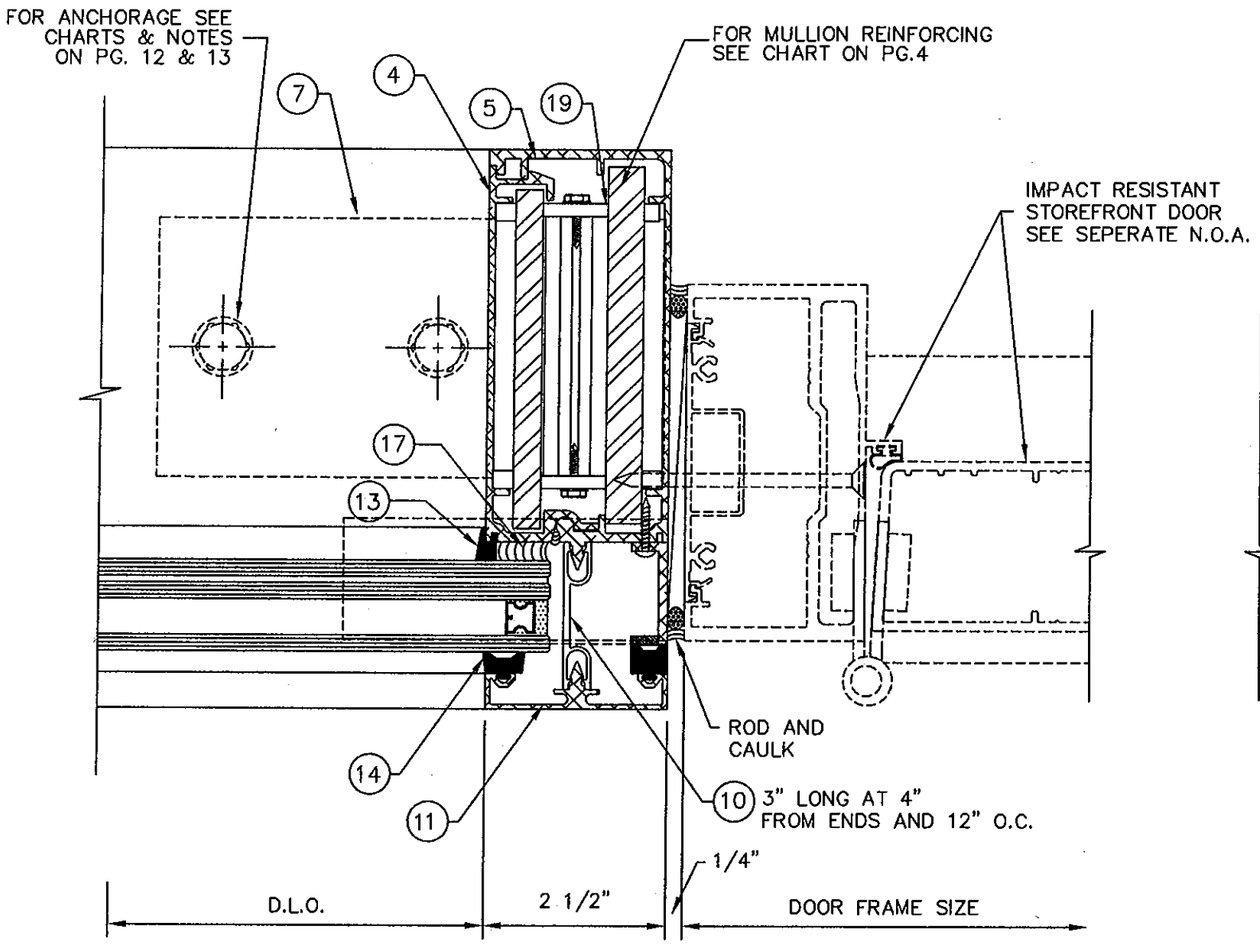

(D) MULLION AT DOOR JAMB

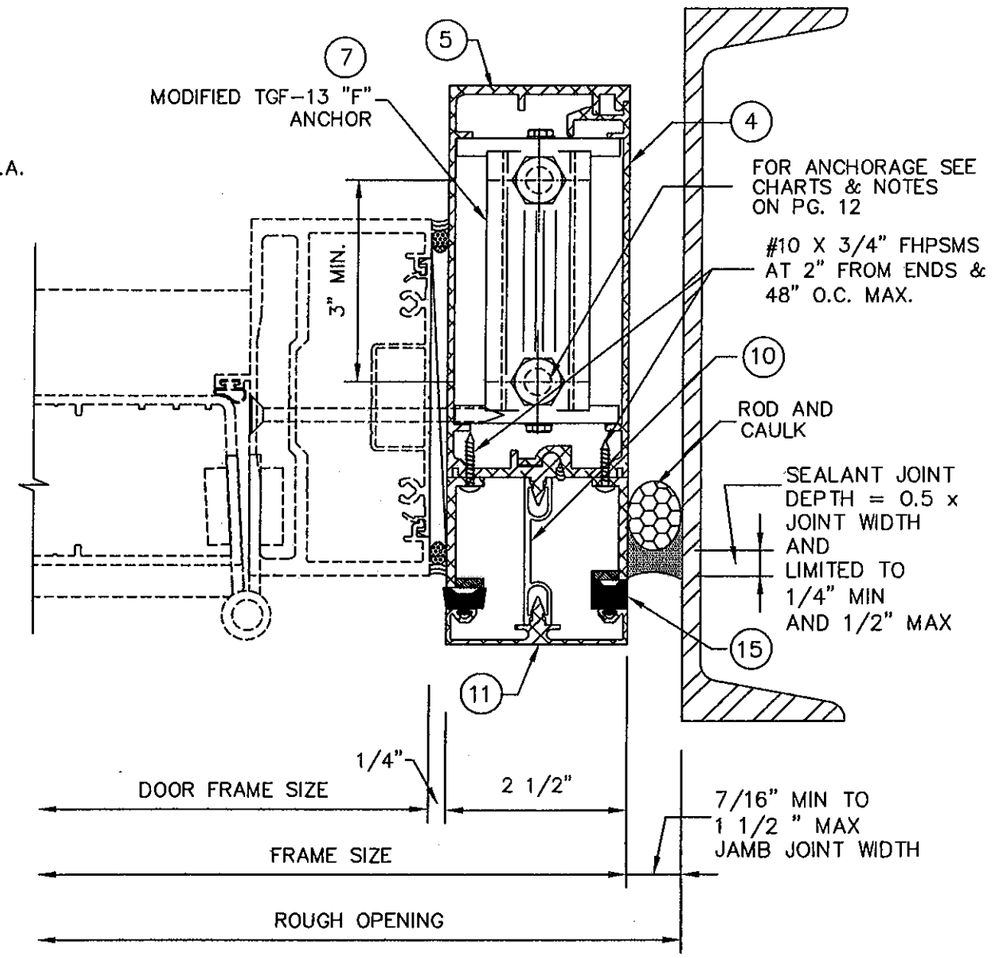

(E) JAMB MULLION

SEALANT NOTES:

GLAZING BEAD AT FRAME SEALED TO GLASS WITH DOW CORNING 983/995

FRAME PERIMETER TO STRUCTURE SEALED WITH DOW CORNING 795

JAMB SEALANT NOTES:

PERIMETER SEALANT OPTIONS:

DOW-CORNING 795 SILICONE

ALTERNATE SEALANTS AND JAMB GAPS:

TO BE APPROVED BY DESIGN PROFESSIONAL OF RECORD AND SEALANT MANUFACTURER

PRODUCT REVISED
as complying with the Florida Building Code
Acceptance No 10-0728.11
Expiration Date Oct. 20, 2015
By Miami Dade Product Control

BROMLEY COOK ENGINEERING, INC.
STRUCTURAL ENGINEERING SERVICES
3440 W.L. 33RD AVENUE SUITE 100
FORT LAUDERDALE, FLORIDA 33309
TEL: (954) 772-4624 FAX: (954) 772-4634

STATE OF FLORIDA LICENSE No 43904 PROFESSIONAL ENGINEER WILLIAM D. COOK

JAN 24 2012

WILLIAM D. COOK P.E.
FLA. REG. # 43904
FLA S.I. # 2008

TRAINOR GLASS COMPANY
1101 13th STREET WEST, RIVIERA BEACH, FL 33404
PH. (561) 863-7078 FAX (561) 863-7088
www.trainorglass.com
ATLANTA, GA. CHICAGO, IL. DENVER, CO. ORLANDO, FL. NEWARK, N.J.

NO.	DATE	BY	REVISIONS

PROJECT NAME: TCW-250TS SERIES

LARGE MISSILE IMPACT W/ REINFORCED MULLIONS

DATE: 11/09/10
SCALE: NOTED
DRAWING: TOM C.
CHECKED BY:
DRAWING NUMBER: TCW250TSLMI
SHEET NO. 7 OF 15

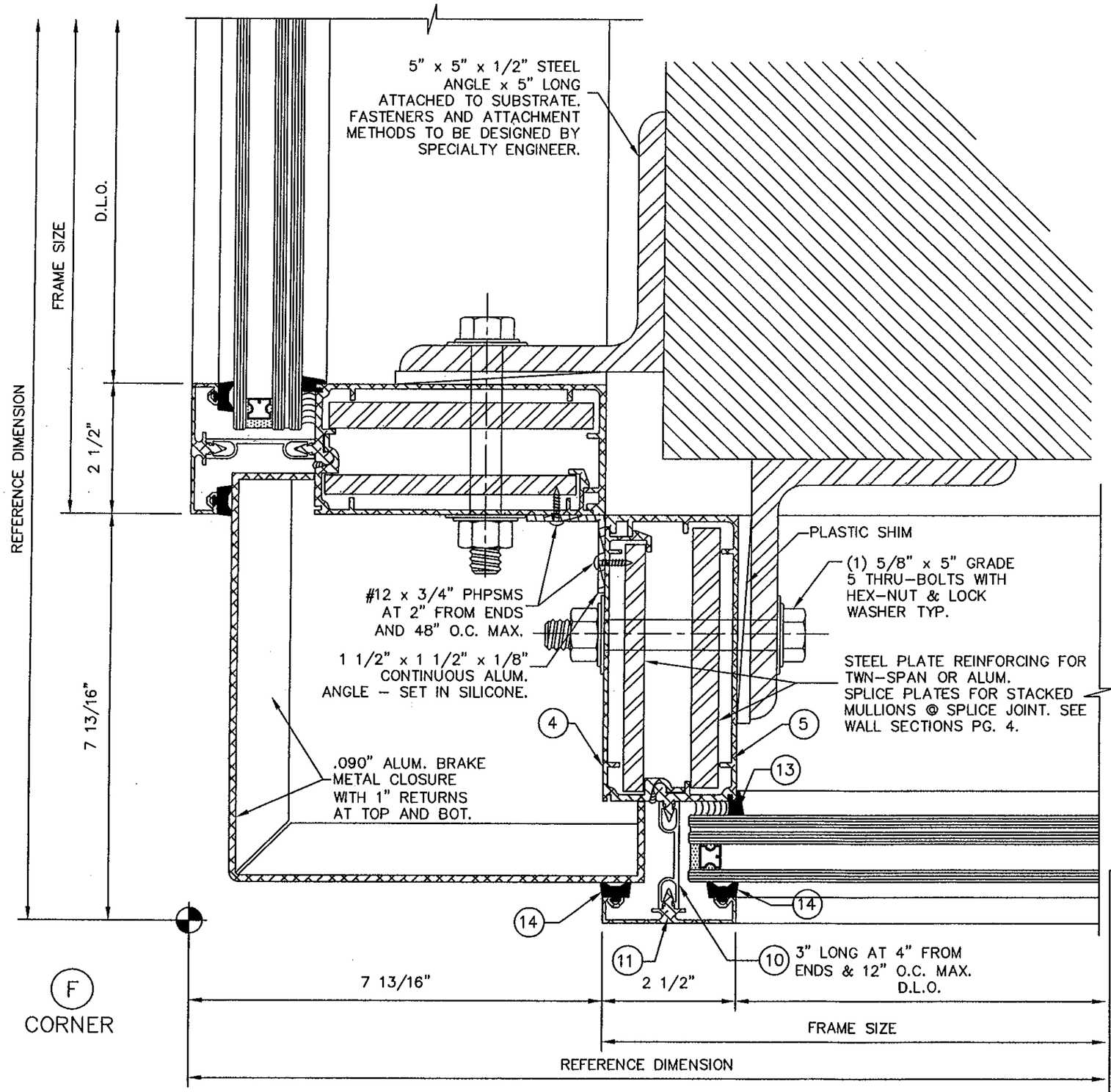

PRODUCT REVISED
as complying with the Florida Building Code
Acceptance No 10-0728.11
Expiration Date Oct. 20, 2015
By Manuel Perez
Miami/Dade Product Control

BROMLEY COOK ENGINEERING, INC.
STRUCTURAL ENGINEERING SERVICES
5440 N.W. 33RD AVENUE SUITE 100
FORT LAUDERDALE, FLORIDA 33309
TEL: (954) 772-4624 FAX: (954) 772-4634

LICENSE No 43904 STATE OF FLORIDA PROFESSIONAL ENGINEER
JAN 24 2011
WILLIAM D. COOK P.E.
FLA. REG. # 43904
FLA. S.I. # 2008

TRAINOR GLASS COMPANY
1101 13th STREET WEST, RIVIERA BEACH, FL 33404
PH. (561) 863-7078 FAX (561) 863-7088
www.trainorglass.com
ATLANTA, GA. CHICAGO, IL. DENVER, CO. ORLANDO, FL. NEWARK, NJ.

NO.	DATE	BY	REVISIONS

PROJECT NAME: TCW-250TS SERIES
LARGE MISSILE IMPACT W/ REINFORCED MULLIONS

DRAWING NUMBER: TCW250TSLMI
SHEET NO. 8 of 15

DATE: 11/09/10
SCALE: NOTED
DRAWN: TOM. C.
CHECKED BY:

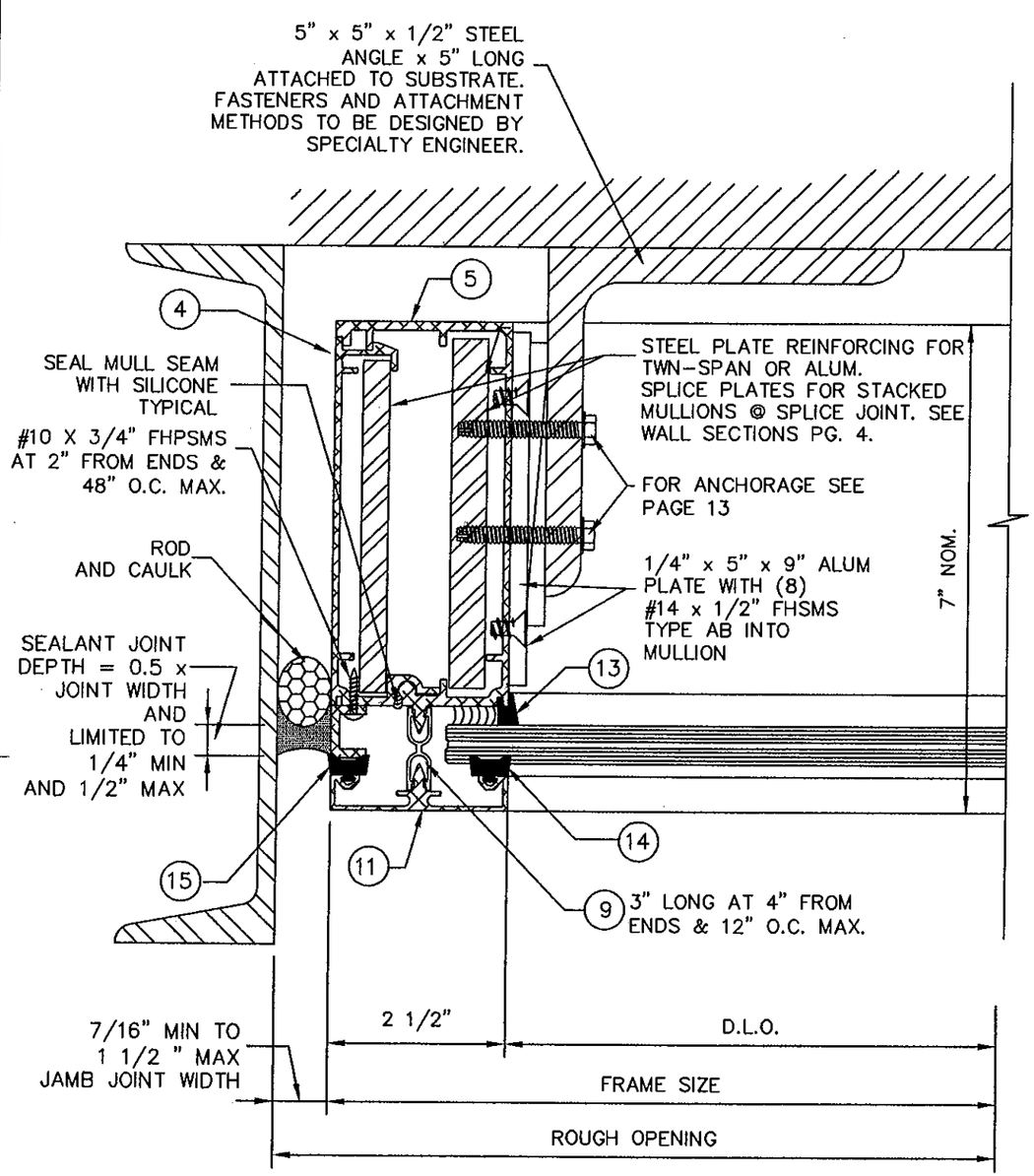

G JAMB

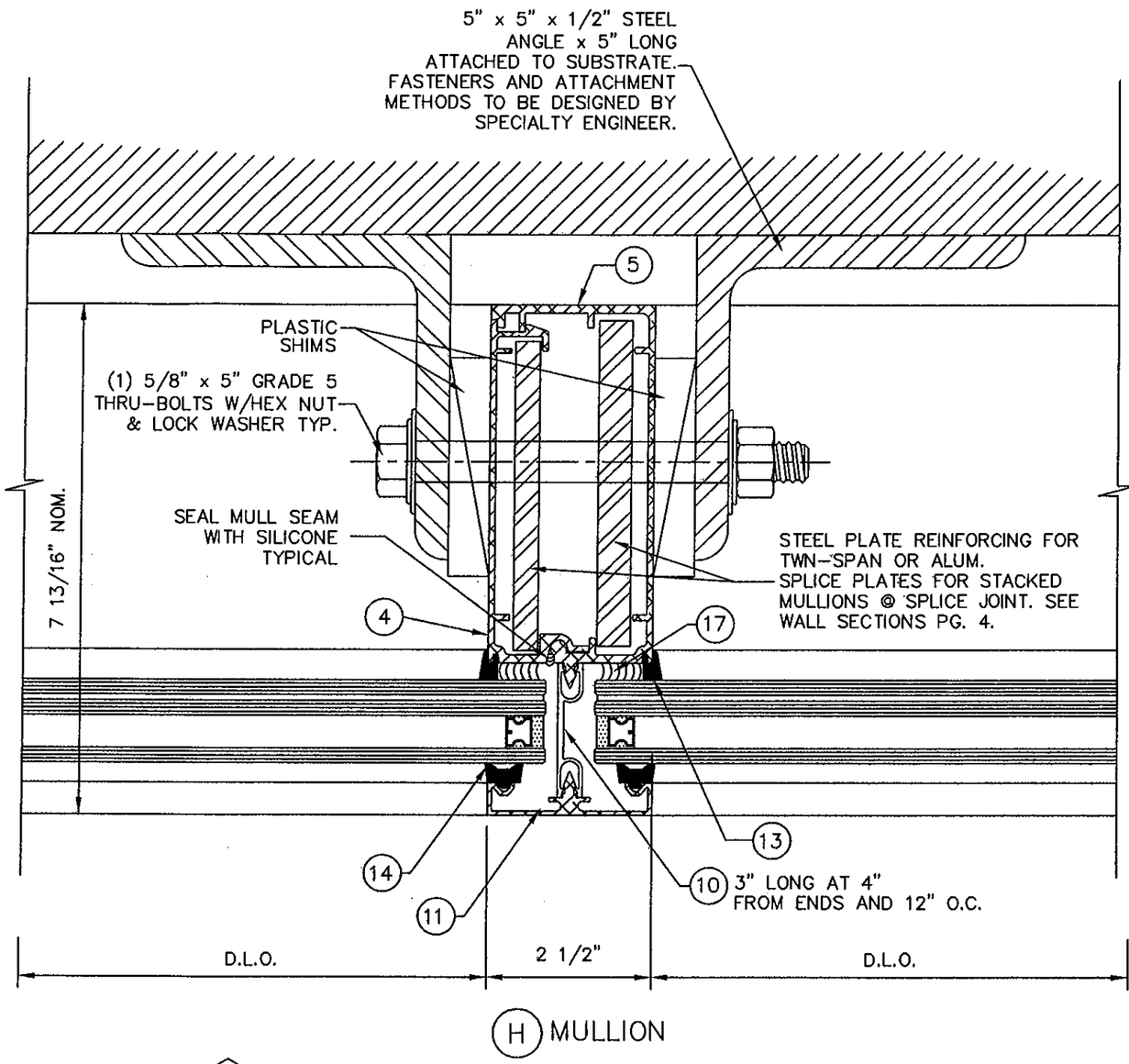

H MULLION

JAMB SEALANT NOTES:

PERIMETER SEALANT OPTIONS:
DOW-CORNING 795 SILICONE

ALTERNATE SEALANTS AND JAMB GAPS:
TO BE APPROVED BY DESIGN PROFESSIONAL OF RECORD AND SEALANT MANUFACTURER

SEALANT NOTES:

GLAZING BEAD AT FRAME SEALED TO GLASS WITH DOW CORNING 983/995

FRAME PERIMETER TO STRUCTURE SEALED WITH DOW CORNING 795

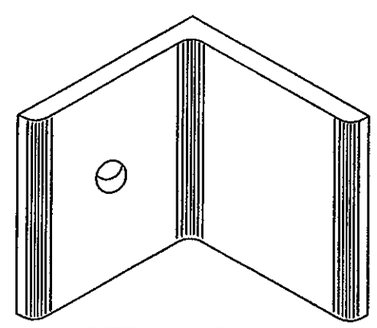

STEEL ANCHOR CLIP
ISOMETRIC VIEW

PRODUCT REVISED
as complying with the Florida Building Code
Acceptance No 10-0728.11
Expiration Date Oct 20, 2015
By Miami Dade Product Control

BROMLEY COOK ENGINEERING, INC.
STRUCTURAL ENGINEERING SERVICES
5440 N.W. 33RD AVENUE SUITE 100
FORT LAUDERDALE, FLORIDA 33309
TEL: (954) 772-4624/FAX: (954) 772-4634

WILLIAM D. COOK
LICENSE No 43904
STATE OF FLORIDA
PROFESSIONAL ENGINEER
JAN 24 2011
WILLIAM D. COOK P.E.
FLA. P.E. # 43904
FLA. S.I. # 2008

GLASS COMPANY
1101 13th STREET WEST, RIVIERA BEACH, FL 33404
PH. (561) 863-7078 FAX (561) 863-7088
www.trainorglass.com
ATLANTA, GA. CHICAGO, IL. DENVER, CO. ORLANDO, FL. NEWARK, NJ.

TRAINOR

NO.	DATE	BY	REVISIONS

PROJECT NAME: TCW-250TS SERIES

LARGE MISSILE IMPACT W/ REINFORCED MULLIONS

DRAWING NUMBER: TCW250TSLMI
SHEET NO. 9 OF 15

DATE: 11/09/10
SCALE: NOTED
DRAWN: TOM C.
CHECKED BY:

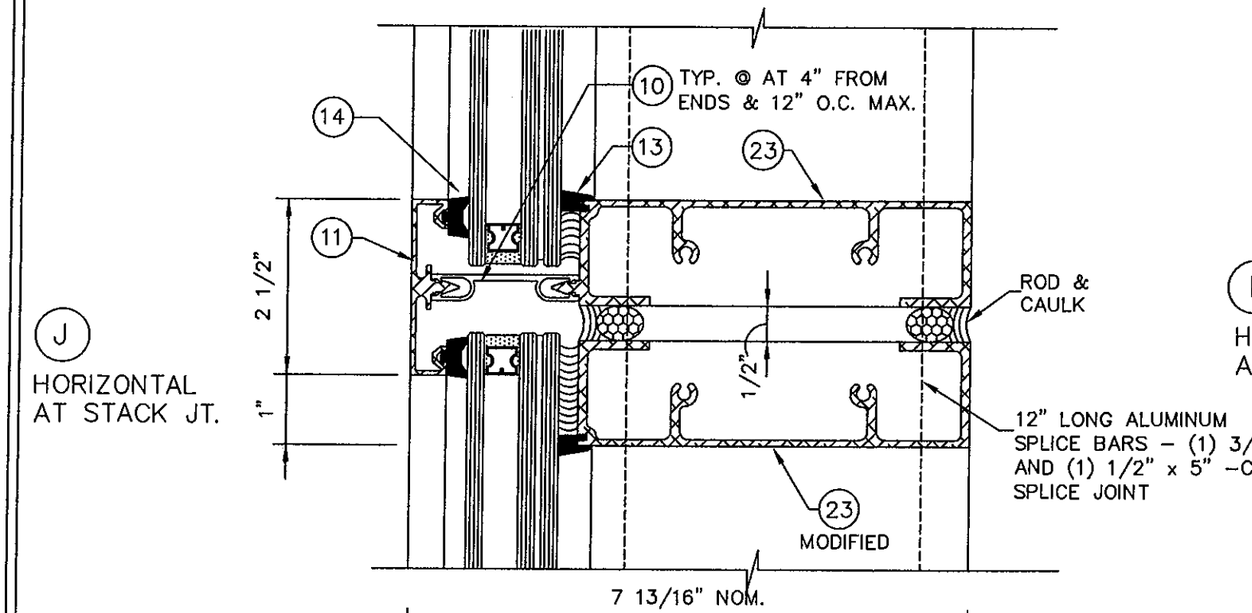

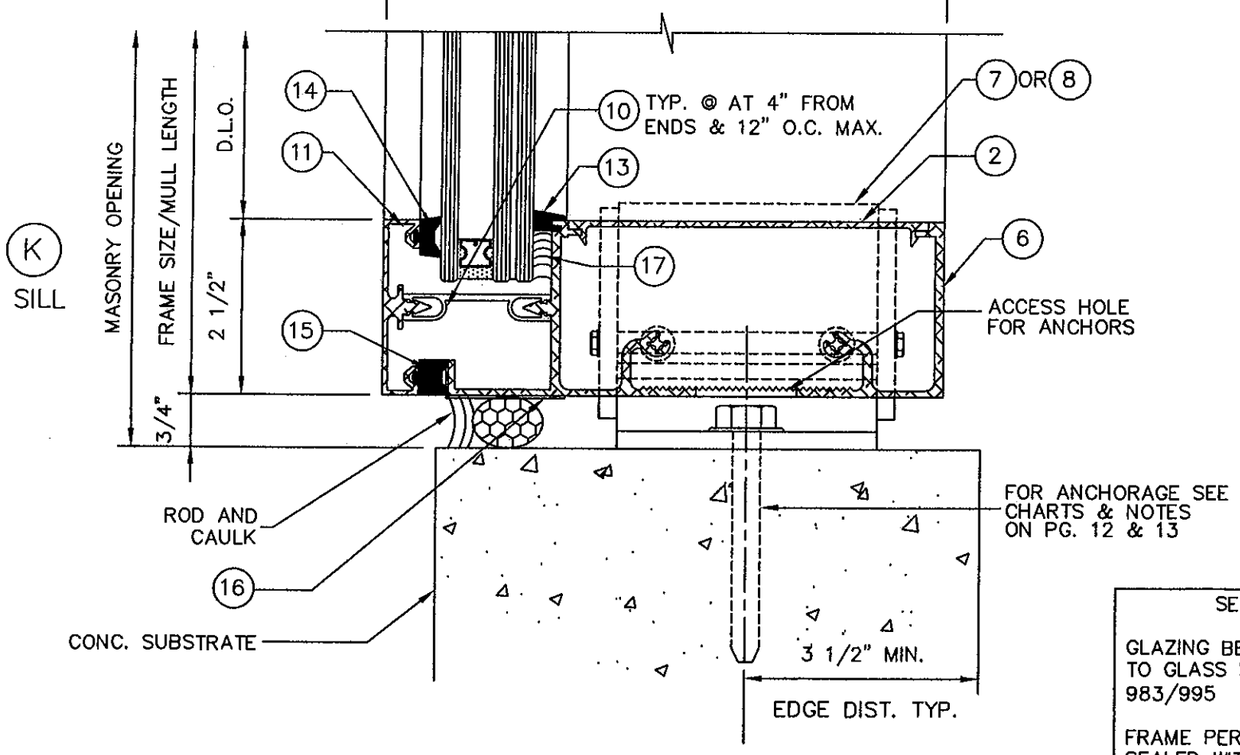

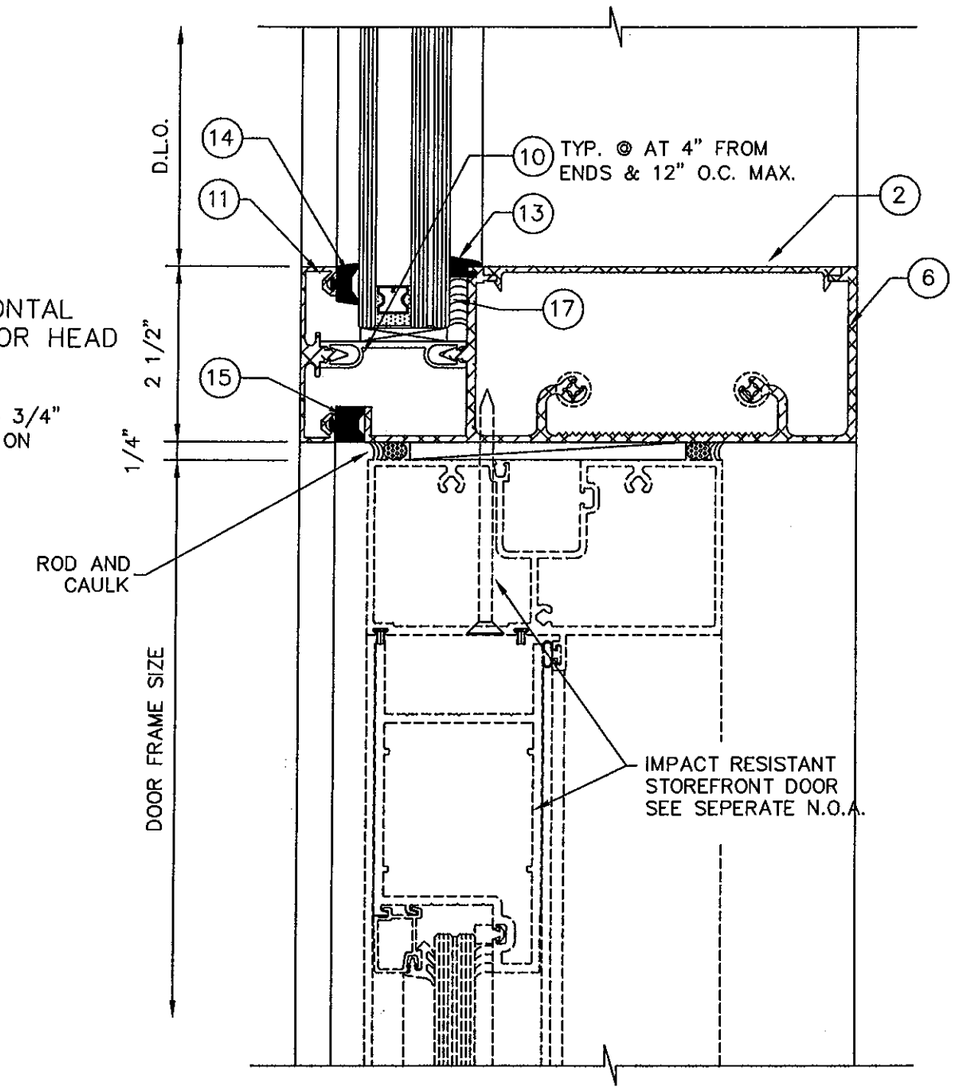

SEALANT NOTES:

GLAZING BEAD AT FRAME SEALED TO GLASS WITH DOW CORNING 983/995

FRAME PERIMETER TO STRUCTURE SEALED WITH DOW CORNING 795

PRODUCT REVISED
as complying with the Florida
Building Code
Acceptance No 10-0728.11
Expiration Date Oct. 20, 2015
By Manuel Perez
Miami Dade Product Control

BROMLEY COOK ENGINEERING, INC.
STRUCTURAL ENGINEERING SERVICES
5440 N.W. 33RD AVENUE SUITE 100
FORT LAUDERDALE, FLORIDA 33309
TEL: (954) 772-4624 FAX: (954) 772-4634

WILLIAM D. COOK
LICENSE
No 43904
STATE OF FLORIDA
PROFESSIONAL ENGINEER
JAN 2 4 2011
WILLIAM D. COOK P.E.
P.E. # 43904
STATE OF FLORIDA

GLASS COMPANY
1101 13th STREET WEST, RIVIERA BEACH, FL 33404
PH. (561) 863-7078 FAX (561) 863-7088
www.trainorglass.com
TRAINOR
ATLANTA, GA. CHICAGO, IL. DENVER, CO. ORLANDO, FL. NEWARK, N.J.

NO.	DATE	BY	REVISIONS

PROJECT NAME: TCW-250TS SERIES

LARGE MISSILE IMPACT W/ REINFORCED MULLIONS

DATE: 11/09/10	DRAWING NUMBER TCW250TSLMI	
SCALE: NOTED	SHEET NO.	10 OF 15
DRAWN: TOM C.		
CHECKED BY:		

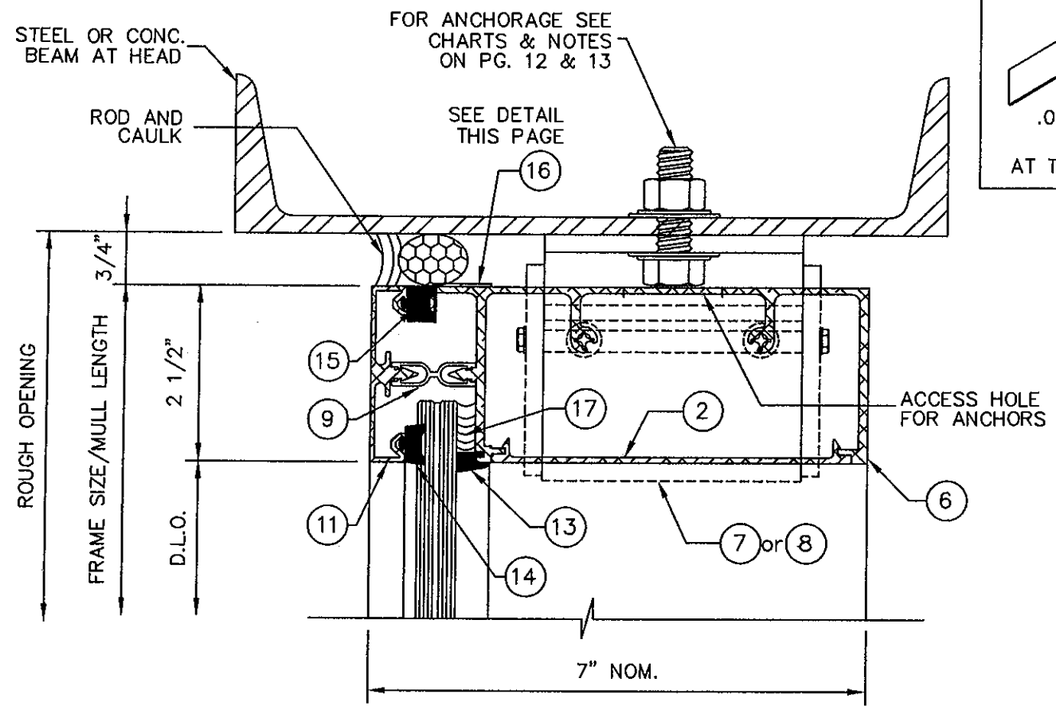

M
HEAD

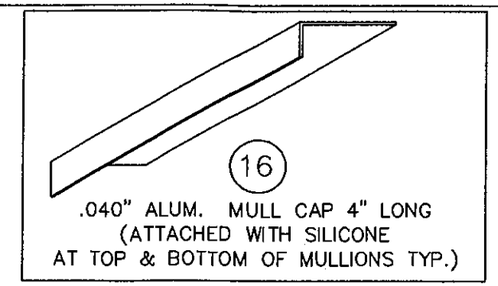

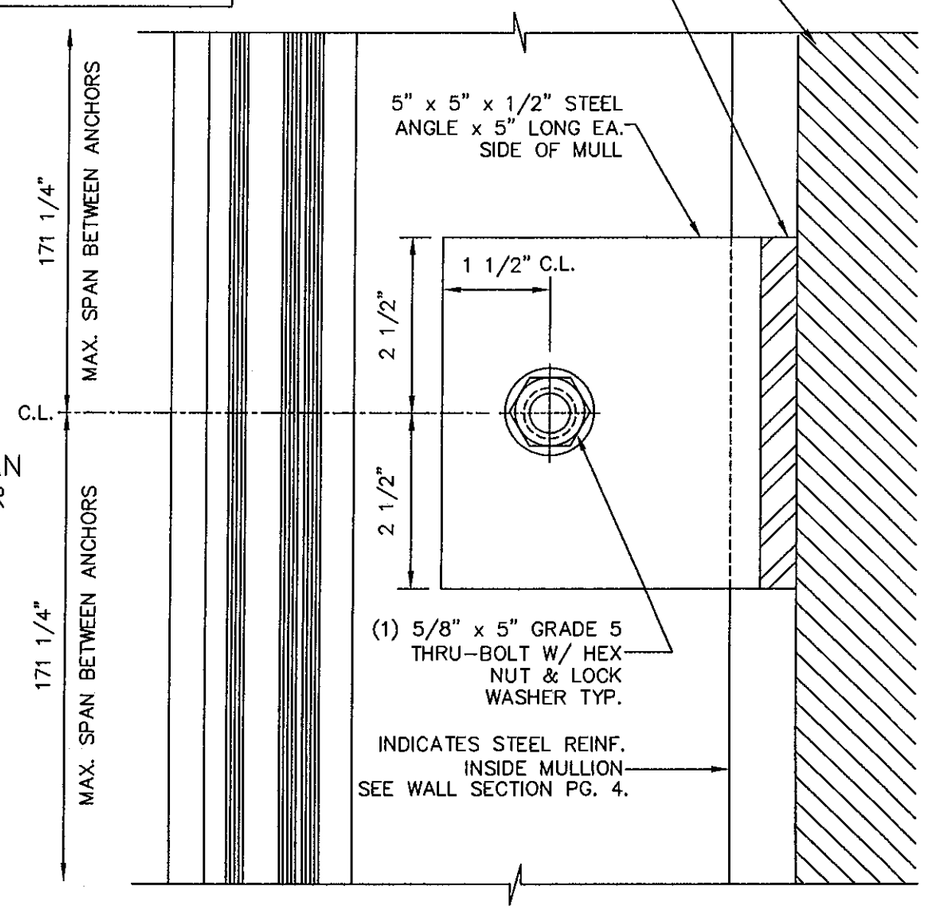

P
MID-SPAN ANCHOR

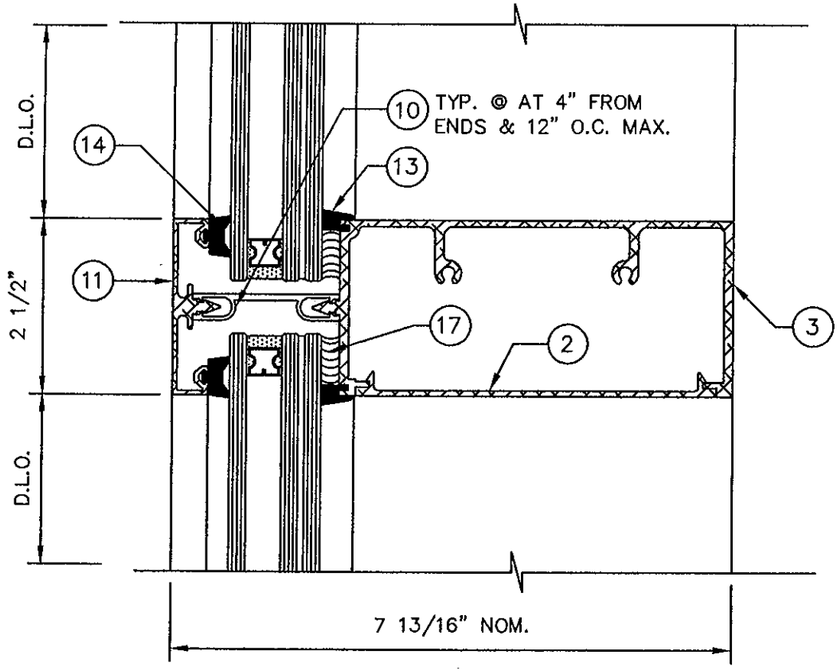

N
INTERMEDIATE HORIZONTAL

PRODUCT REVISED
as complying with the Florida Building Code
Acceptance No 10-0728.11
Expiration Date Oct 20, 2015
By Manuel Perez
Miami Dade Product Control

BROMLEY COOK ENGINEERING, INC.
STRUCTURAL ENGINEERING SERVICES
5440 N.W. 33RD AVENUE SUITE 100
FORT LAUDERDALE, FLORIDA 33309
TEL: (954) 772-4624 FAX: (954) 772-4634

WILLIAM D. COOK LICENSE No 43904 STATE OF FLORIDA PROFESSIONAL ENGINEER
JAN. 04 2011
WILLIAM D. COOK P.E.
FLA. REG. # 43904
EXP. DATE: 1/1/2008

TRAINOR GLASS COMPANY
1101 13th STREET WEST, RIVIERA BEACH, FL 33404
PH. (561) 863-7078 FAX (561) 863-7088
www.trainorglass.com
ATLANTA, GA. CHICAGO, IL. DENVER, CO. ORLANDO, FL. NEWARK, N.J.

NO.	DATE	BY	REVISIONS

PROJECT NAME: TCW-250TS SERIES

LARGE MISSILE IMPACT W/ REINFORCED MULLIONS

DRAWING NUMBER: TCW250TSLMI
SHEET NO. 11 of 15

DATE: 11/09/10
SCALE: NOTED
DRAWN: TOM C.
CHECKED BY:

MULLION ANCHOR OPTIONS

ANCHOR TYPE / SUBSTRATE	"F" OR "T" ANCHOR IN VERTICAL MULLION ENDS	MODIFIED "F" ANCHOR IN DOOR JAMB MULLION END
CONC. (3000 PSI MIN.)	"A2,B2" 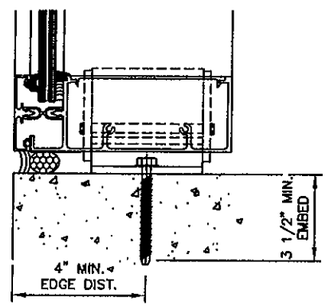	"J2" 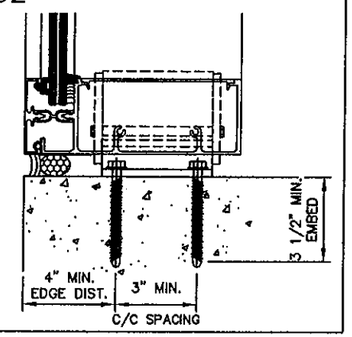
STEEL ASTM-A36 (1/8" THICK MIN.)	"C2,D8,G2,H4" 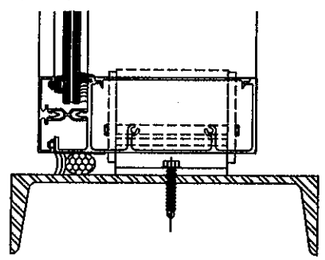	

FRAME ANCHOR LOAD CHART

	MEMBER	MULLION	JAMB	JAMB	MULLION	JAMB	MULLION	JAMB
	ANCHOR TYPE	A2	B2	J2	C2	C2	D8	D4
	SUBSTRATE	CONCRETE			METAL			
WIDTH (W)	LENGTH (L)	ALLOWABLE WIND LOAD (PSF)						
48"	171 1/4"	95	95	95	95	110	95	79
54"		95	86	86		110		70
60"		88	77	77		110		63
62"		85	75	75		110		61
68"		77	68	68		109		55
74"		71	62	62		100		51
80"		66	58	58		93		47
48"	159 1/4"	95	95	95		110		86
54"		95	94	94		110		76
60"		95	84	84		110		69
62"		93	82	82		110		67
68"		85	74	74		110		61
74"		78	68	68		108		56
80"		72	63	63		100		52
48"	147 1/4"	95	95	95		110		93
54"		95	95	95		110		83
60"		95	91	91		110		74
62"		95	88	88		110		72
68"		91	80	80		110		66
74"		84	74	74		110		60
80"		78	68	68	95	108	95	56

NOTE: INTERMEDIATE THRU-BOLT ANCHORS ARE ADEQUATE FOR FULL LOAD CAPACITY OF SYSTEM.

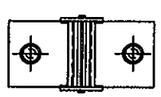

MULLION ANCHORAGE (HEAD & SILL)

CONCRETE: A2- (2)3/8" DIA. "POWERS" WEDGE BOLTS PER EA. "T" ANCHOR (1 EACH SIDE OF MULLION)
3 1/2" MIN. EMBED
4" MIN. EDGE DIST.
5 1/2" MIN. C.C. SPACING

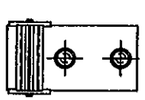

JAMB ANCHORAGE (HEAD & SILL)

CONCRETE: B2-(2)3/8" DIA. "POWERS" WEDGE BOLTS PER EA. "F" ANCHOR
3 1/2" MIN. EMBED
4" MIN. EDGE DIST.
3" MIN. C.C. SPACING

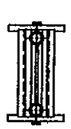

CONCRETE: J2- (2)3/8" DIA. 'POWERS' WEDGE BOLTS PER EA. CLIP ANCHOR
3 1/2" MIN. EMBED.
4" MIN. EDGE DIST.
3" MIN. C.C. SPACING

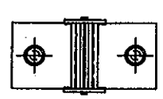

MULLION ANCHORAGE (DOOR JAMB)

STEEL: C2- (2)3/8" DIA. GRADE 5 H.H. BOLTS PER "F" ANCHOR THRU 1/8" MIN. THICKNESS A36 STEEL.

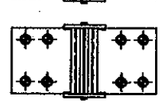

STEEL: D8- (8)#14 H.H. SELF DRILLING OR TEK SCREWS PER "T" ANCHOR THRU 1/8" MIN.THICKNESS A36 STEEL. (4 EA. SIDE OF MULLION)

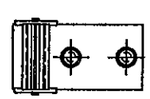

JAMB ANCHORAGE (HEAD & SILL)

STEEL: C2- (2)3/8" DIA. GRADE 5 H.H. BOLTS PER "T" ANCHOR THRU 1/8" MIN. THICKNESS A36 STEEL. (1 EA. SIDE OF MULLION)

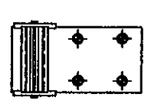

STEEL: D4- (4)#14 H.H. SELF DRILLING OR TEK SCREWS PER "F" ANCHOR THRU 1/8" MIN. THICKNESS A36 STEEL.

PRODUCT REVISED
as complying with the Florida Building Code
Acceptance No 10-0728.11
Expiration Date Oct. 20, 2015
By Manuel Perez
Miami Dade Product Control

BROMLEY, COOK ENGINEERING, INC.
STRUCTURAL ENGINEERING SERVICES
8440 N.W. 33RD AVENUE SUITE 100
FORT LAUDERDALE, FLORIDA 33309
TEL: (954) 772-4624 FAX: (954) 772-4634

STATE OF FLORIDA PROFESSIONAL ENGINEER No 43904 JAN 24 2011 MILLIAN-D. COOK P.E. FLA REG. # 43904 FLA S.I. # 2008

TRAINOR GLASS COMPANY
1101 13th STREET WEST, RIVIERA BEACH, FL 33404
PH. (561) 863-7078 FAX (561) 863-7088
www.trainorglass.com
ATLANTA,GA. CHICAGO,IL DENVER,CO ORLANDO, FL NEWARK, N.J.

NO.	DATE	BY	REVISIONS

PROJECT NAME: TCW-250TS SERIES

LARGE MISSILE IMPACT W/ REINFORCED MULLIONS

DRAWING NUMBER: TCW250TSLMI
SHEET NO. 12 OF 15

DATE: 11/09/10
SCALE: N.T.S.
DRAWN: TOM C.
CHECKED BY:

INTERMEDIATE ANCHORAGE

TWIN SPAN MID-SPAN MULLION ANCHOR CLIP

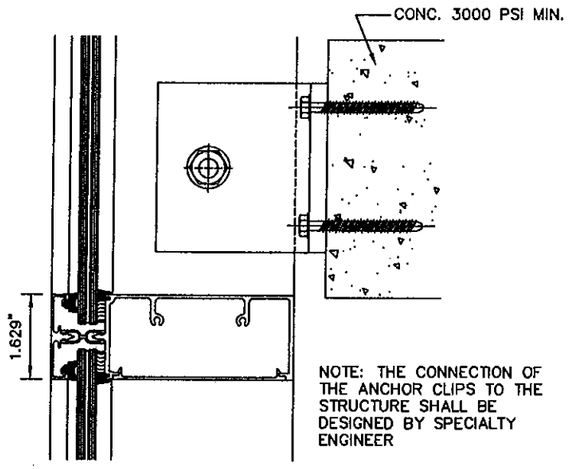

NOTE: THE CONNECTION OF THE ANCHOR CLIPS TO THE STRUCTURE SHALL BE DESIGNED BY SPECIALTY ENGINEER

TWIN SPAN MID-SPAN JAMB ANCHOR CLIP

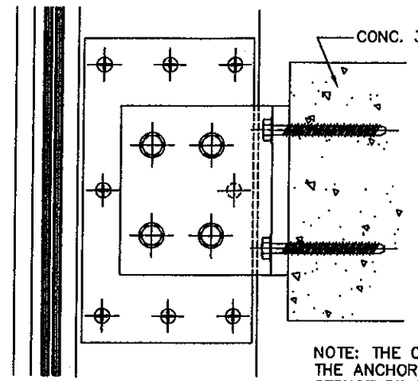

NOTE: THE CONNECTION OF THE ANCHOR CLIPS TO THE STRUCTURE SHALL BE DESIGNED BY SPECIALTY ENGINEER

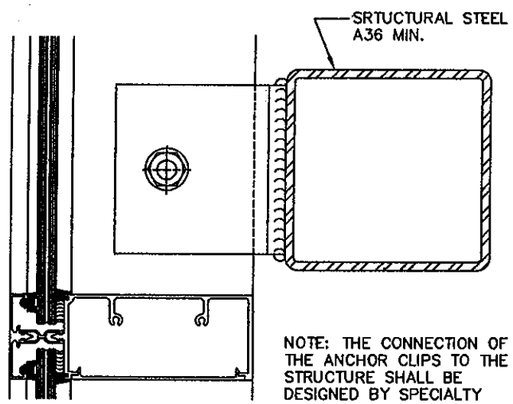

NOTE: THE CONNECTION OF THE ANCHOR CLIPS TO THE STRUCTURE SHALL BE DESIGNED BY SPECIALTY ENGINEER

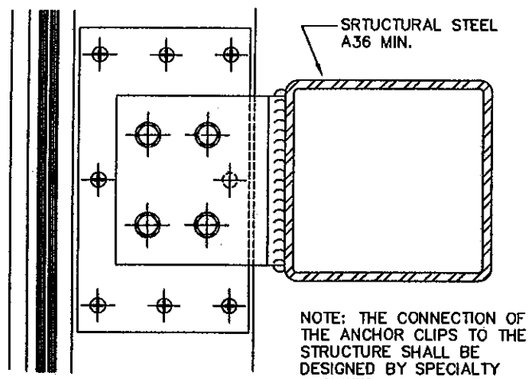

NOTE: THE CONNECTION OF THE ANCHOR CLIPS TO THE STRUCTURE SHALL BE DESIGNED BY SPECIALTY ENGINEER

MULLION ANCHORAGE (MID-SPAN)

5/8" DIA. H.H. BOLTS GRADE-5 WITH HEX-NUTS & LOCK WASHERS (1 PER EA. MID-SPAN ANCHOR CLIP)

JAMB ANCHORAGE (MID-SPAN)

(4) 3/8" DIA. GRADE 5 H.H.M.S. TYPE "F" THREAD FORMING
(4 PER EA. MID-SPAN ANCHOR CLIP)

PRODUCT REVISED
as complying with the Florida Building Code
Acceptance No 10-0728.11
Expiration Date Oct 20, 2015
By Manuel Perez
Miami Dade Product Control

BROMLEY COOK ENGINEERING, INC.
STRUCTURAL ENGINEERING SERVICES
5440 N.W. 33RD AVENUE SUITE 100
FORT LAUDERDALE, FLORIDA 33309
TEL: (954) 772-4824 FAX: (954) 772-4834

STATE OF FLORIDA LICENSE No 43904 PROFESSIONAL ENGINEER
JAN 24 2011
WILLIAM D. COOK P.E.
FLA. P.E. No. 43904
FLA. S.I. No. 2008

TRAINOR GLASS COMPANY
1101 13th STREET WEST, RIVIERA BEACH, FL 33404
PH. (561) 863-7078 FAX (561) 863-7088
www.trainorglass.com
ATLANTA,GA. CHICAGO,IL DENVER,CO. ORLANDO, FL NEWARK, N.J.

NO.	DATE	BY	REVISIONS

PROJECT NAME: TCW-250TS SERIES

LARGE MISSILE IMPACT W/ REINFORCED MULLIONS

DATE: 11/09/10
SCALE: N.T.S.
DRAWN:
CHECKED BY:
DRAWING NUMBER: TCW250TSLMI
SHEET NO. 13 of 15

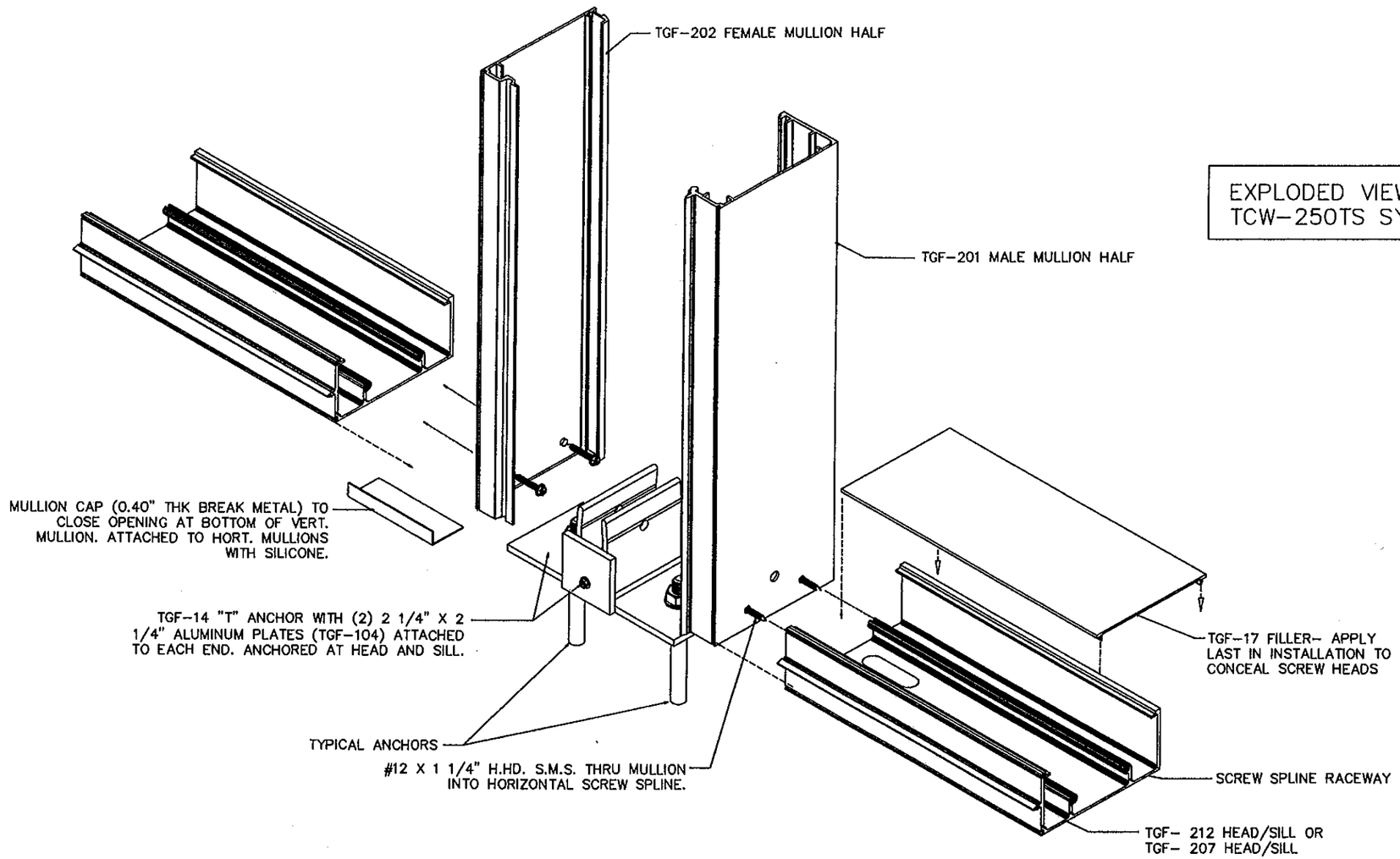

EXPLODED VIEW OF TCW-250TS SYSTEM

PRODUCT REVISED
as complying with the Florida
Building Code
Acceptance No 10-0728.11
Expiration Date Oct. 20, 2015
By Manuel Perez
Miami Dade Product Control

BROMLEY COOK ENGINEERING, INC.
STRUCTURAL ENGINEERING SERVICES
5440 N.W. 33RD. AVENUE SUITE 100
FORT LAUDERDALE, FLORIDA 33308
TEL: (954) 772-4624 FAX: (954) 772-4634

STATE OF FLORIDA
WILLIAM D. COOK
No 43904
PROFESSIONAL ENGINEER
JAN 24 2008
WILLIAM D. COOK P.E.
FLA. P.E. # 43904
FLA S.I. # 2008

TRAINOR GLASS COMPANY
1107 13th STREET WEST, RIVIERA BEACH, FL 33404
PH. (561) 863-7078 FAX (561) 863-7088
www.trainorglass.com
ATLANTA,GA. CHICAGO,IL DENVER,CO. ORLANDO, FL NEWARK, N.J.

NO.	DATE	BY	REVISIONS

PROJECT NAME: TCW-250TS SERIES

LARGE MISSILE IMPACT W/ REINFORCED MULLIONS

DATE: 11/09/10
SCALE: N.T.S.
DRAWING NUMBER: TCM250TSLMI
SHEET NO. 14 OF 15
DRAWN: TOM C.
CHECKED BY:

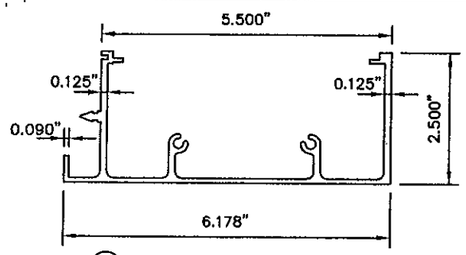

(1) FRAME – HEAD/SILL TGF-212

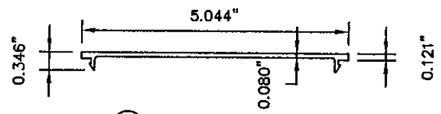

(2) FILLER TGF-17

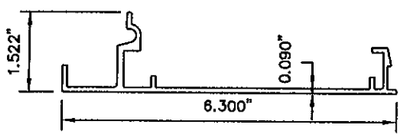

(22) JAMB TGF-110

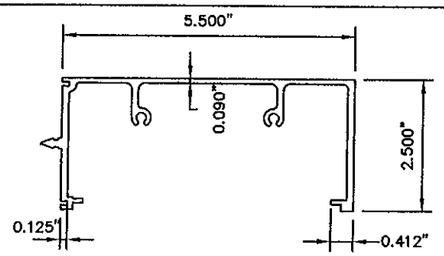

(3) INTERMEDIATE TGF-23

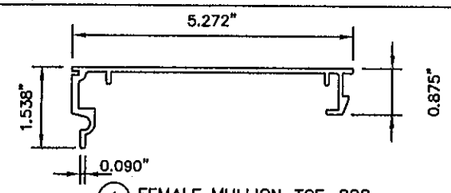

(4) FEMALE MULLION TGF-202

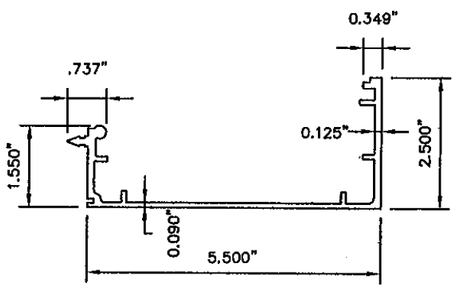

(5) MALE MULLION TGF-201

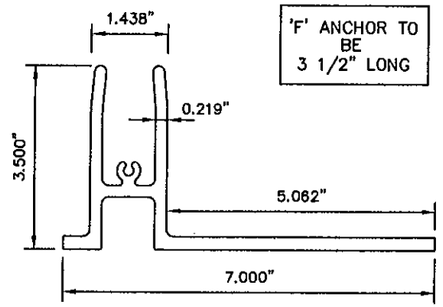

(7) ANCHOR "F" TGF-13

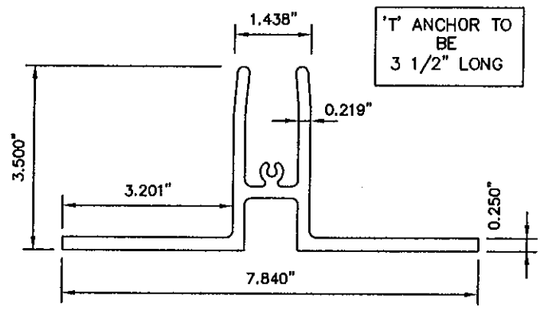

(8) ANCHOR "T" TGF-14

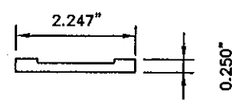

(19) END PLATE TGF-104

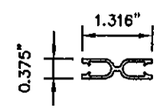

(9) COVER CLIP TGF-101

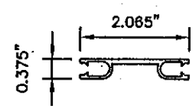

(10) COVER CLIP TGF-102

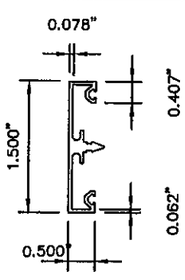

(11) COVER TGF-209

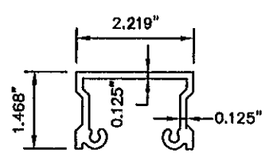

(21) SHEAR BLOCK TGF-15

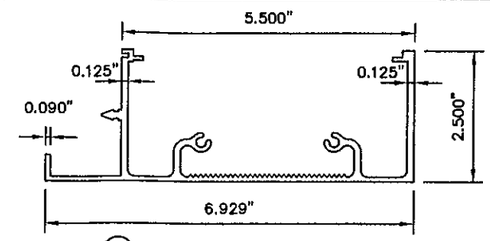

(6) FRAME – HEAD/SILL TGF-207

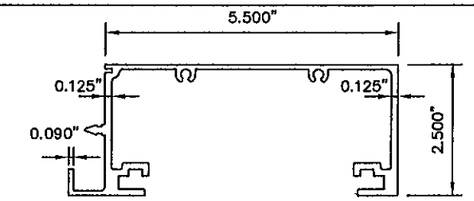

(12) FRAME HEAD/SILL TGF-86

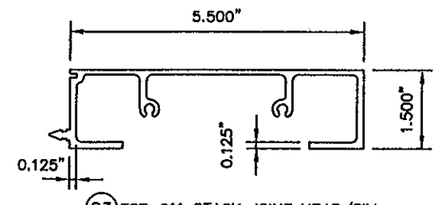

(23) TGF-211 STACK JOINT HEAD/SILL

ITEM #	PART #	QUANTITY	DESCRIPTION	MATERIAL	MANUF./SUPPLIER/REMARKS
1	TGF-212	AS REQ'D	FRAME HEAD/SILL	ALUM. 6063-T5	TRAINOR GLASS CO.
2	TGF-17	AS REQ'D	FILLER	ALUM. 6063-T5	TRAINOR GLASS CO.
3	TGF-23	AS REQ'D	INT. HORIZONTAL	ALUM. 6063-T5	TRAINOR GLASS CO.
4	TGF-202	AS REQ'D	FEMALE MULLION	ALUM. 6063-T6	TRAINOR GLASS CO.
5	TGF-201	AS REQ'D	MALE MULLION	ALUM. 6063-T6	TRAINOR GLASS CO.
6	TGF-207	AS REQ'D	FRAME HEAD/SILL	ALUM. 6063-T5	TRAINOR GLASS CO.
7	TGF-13	1/JAMB	"F" ANCHOR AT JAMBS	ALUM. 6063-T5	TRAINOR GLASS CO.
8	TGF-14	1/MULLION	"T" ANCHOR AT MULLIONS	ALUM. 6063-T5	TRAINOR GLASS CO.
9	TGF-101	AS REQ'D	COVER CLIP	ALUM. 6063-T5	TRAINOR GLASS CO.
10	TGF-102	AS REQ'D	COVER CLIP	ALUM. 6063-T5	TRAINOR GLASS CO.
11	TGF-209	AS REQ'D	COVER	ALUM. 6063-T5	TRAINOR GLASS CO.
12	TGF-86	AS REQ'D	FRAME HEAD/SILL/JAMB	ALUM. 6063-T6	TRAINOR GLASS CO.
13	TR-5796	AS REQ'D	BLOW OUT GASKET	VINYL	TREMCO (SILICONE COMPATIBLE)
14	TR-6049	AS REQ'D	GLAZING GASKET	NEOPRENE	TREMCO
15	TR-6050	AS REQ'D	GLAZING GASKET	NEOPRENE	TREMCO
16	N/A	1/ EA. END	MULLION END CAP	.040 ALUM.	TRAINOR GLASS CO.
17	983/995	AS REQ'D	GLAZING COMPOUND	SILICONE	DOW-CORNING
18	N/A				
19	TGF-104	2/"F" OR "T"	END PLATE	ALUM. 6063-T5	TRAINOR GLASS CO.
20	–	AS REQ'D	1/2" X 1 1/2" X 1/2" CHAN.	ALUM. 6063-T5	TRAINOR GLASS CO. (1/8" WALL)
21	TGF-15	AS REQ'D	SHEAR BLOCK	ALUM. 6063-T5	TRAINOR GLASS CO.
22	TGF-110	AS REQ'D	JAMB MEMBER	ALUM. 6063-T6	TRAINOR GLASS CO.
23	TGF-211	AS REQ'D	STACK JT. HEAD/SILL	ALUM. 6063-T6	TRAINOR GLASS CO.

PRODUCT REVISED
as complying with the Florida
Building Code
Acceptance No 10-0728.11
Expiration Date Oct. 20, 2015
By Manuel Perez
Miami-Dade Product Control

BROMLEY COOK ENGINEERING, INC.
STRUCTURAL ENGINEERING SERVICES
5440 N.W. 33RD AVENUE SUITE 100
FORT LAUDERDALE, FLORIDA 33309
TEL: (954) 772-4624 FAX: (954) 772-4634

STATE OF FLORIDA
No 43904
PROFESSIONAL ENGINEER
WILLIAM D. COOK P.E.
FLA P.E. # 43904
FLA S.I. # 2008
JAN. 24, 2011

TRAINOR GLASS COMPANY
1101 13th STREET WEST, RIVIERA BEACH, FL 33404
PH. (561) 863-7078 FAX (561) 863-7088
www.trainorglass.com
ATLANTA,GA. CHICAGO,IL. DENVER,CO. ORLANDO, FL. NEWARK, N.J.

NO.	DATE	BY	REVISIONS

PROJECT NAME: TCW-250TS SERIES

LARGE MISSILE IMPACT W/ REINFORCED MULLIONS

DATE: 11/09/10
SCALE: N.T.S.
DRAWING:
DRAWING NUMBER: TCW250TSLMI
SHEET NO. 15 OF 15
CHECKED BY: