MIAMI-DADE COUNTY
BUILDING CODE COMPLIANCE OFFICE (BCCO)
PRODUCT CONTROL DIVISION

MIAMI-DADE COUNTY, FLORIDA
METRO-DADE FLAGLER BUILDING
140 WEST FLAGLER STREET, SUITE 1603
MIAMI, FLORIDA 33130-1563
(305) 375-2901 FAX (305) 372-6339
www.miamidade.gov/buildingcode

NOTICE OF ACCEPTANCE (NOA)

Arch Windows, LLC dba AWP
8130 NW 74th Avenue
Medley, FL 33166

SCOPE:

This NOA is being issued under the applicable rules and regulations governing the use of construction materials. The documentation submitted has been reviewed by Miami-Dade County Product Control Division and accepted by the Board of Rules and Appeals (BORA) to be used in Miami Dade County and other areas where allowed by the Authority Having Jurisdiction (AHJ).

This NOA shall not be valid after the expiration date stated below. The Miami-Dade County Product Control Division (In Miami Dade County) and/or the AHJ (in areas other than Miami Dade County) reserve the right to have this product or material tested for quality assurance purposes. If this product or material fails to perform in the accepted manner, the manufacturer will incur the expense of such testing and the AHJ may immediately revoke, modify, or suspend the use of such product or material within their jurisdiction. BORA reserves the right to revoke this acceptance, if it is determined by Miami-Dade County Product Control Division that this product or material fails to meet the requirements of the applicable building code. This product is approved as described herein, and has been designed to comply with the Florida Building Code, including the High Velocity Hurricane Zone.

DESCRIPTION: Series "580 and 800" Aluminum Dual Action Windows – N.I.

APPROVAL DOCUMENT: Drawing No. **W07-99**, titled "Aluminum Dual Action Window (N.I.)", sheets 1 through 7 of 7, dated 12/11/07, with revision a dated 05/27/10, prepared by Al-Farooq Corporation, signed and sealed by Javad Ahmad, P.E., bearing the Miami-Dade County Product Control Revision stamp with the Notice of Acceptance number and expiration date by the Miami-Dade County Product Control Division.

MISSILE IMPACT RATING: None.

LABELING: Each unit shall bear a permanent label with the manufacturer's name or logo, city, state and following statement: "Miami-Dade County Product Control Approved", unless otherwise noted herein.

RENEWAL of this NOA shall be considered after a renewal application has been filed and there has been no change in the applicable building code negatively affecting the performance of this product.

TERMINATION of this NOA will occur after the expiration date or if there has been a revision or change in the materials, use, and/or manufacture of the product or process. Misuse of this NOA as an endorsement of any product, for sales, advertising or any other purposes shall automatically terminate this NOA. Failure to comply with any section of this NOA shall be cause for termination and removal of NOA.

ADVERTISEMENT: The NOA number preceded by the words Miami-Dade County, Florida, and followed by the expiration date may be displayed in advertising literature. If any portion of the NOA is displayed, then it shall be done in its entirety.

INSPECTION: A copy of this entire NOA shall be provided to the user by the manufacturer or its distributors and shall be available for inspection at the job site at the request of the Building Official.

This NOA **revises and supersedes NOA # 09-0316.12** and consists of this page 1 and evidence pages E-1 and E-2, as well as approval document mentioned above.

The submitted documentation was reviewed by **Manuel Perez, P.E.**

MIAMI-DADE COUNTY APPROVED

Arch Windows, LLC dba AWP

NOTICE OF ACCEPTANCE: EVIDENCE SUBMITTED

A. DRAWINGS

1. Manufacturer's die drawings and sections.
2. Drawing No. **1252**, titled "Plat Mullion" Sheets 1 through 4 of 4, dated 09/14/04, prepared by W.W. Schaefer Engineering & Consulting P.A., signed and sealed by Warren W. Schaefer, P.E.

B. TESTS

1. Test reports on: 1) Air Infiltration Test, per PA 202-94
   2) Uniform Static Air Pressure Test, Loading per PA 202-94
   3) Water Resistance Test, per PA 202-94
   4) Forced Entry Test, per PA 202-94

   along with marked-up drawings and installation diagram of an aluminum single hung, dual action egress window, prepared by Fenestration Testing Laboratory, Inc., Test Reports No. **FTL-5515**, dated 01/30/08, signed and sealed by Carlos S. Rionda, P.E.
   (Submitted under NOA # 08-0613.06)
2. Test reports on: 1) Air Infiltration Test, per PA 202-94
   2) Uniform Static Air Pressure Test, Loading per PA 202-94
   3) Water Resistance Test, per PA 202-94
   4) Forced Entry Test, per PA 202-94

   along with marked-up drawings and installation diagram of an aluminum awning dual action egress window, prepared by Fenestration Testing Laboratory, Inc., Test Reports No. **FTL-5514**, dated 01/22/08, signed and sealed by Carlos S. Rionda, P.E.
   (Submitted under NOA #08-0613.06)
3. Test reports on: 1) Air Infiltration Test, per PA 202-94
   2) Uniform Static Air Pressure Test, Loading per PA 202-94
   3) Water Resistance Test, per PA 202-94
   4) Forced Entry Test, per PA 202-94

   along with marked-up drawings and installation diagram of an aluminum single hung, awning and fixed egress window, prepared by Fenestration Testing Laboratory, Inc., Test Reports No. **FTL-1660, FTL-1661 and FTL-1704 respectively**, dated 06/23/1997, signed and sealed by Gilbert Diamond, P.E.
   (Submitted under NOA# 07-0102.01)

C. CALCULATIONS:

1. Anchor verification calculations and structural analysis, complying with FBC-2004 and 2007, prepared by Al-Farooq Corporation, dated 5/23/06 and revised on 12/02/08, signed and sealed by Humayoun Farooq, P.E.
   Complies with ASTM E1300-02/04

Manuel Perez, P.E.
Product Control Examiner
NOA No. 10-0804.07
Expiration Date: December 10, 2012
Approval Date: November 24, 2010

NOTICE OF ACCEPTANCE: EVIDENCE SUBMITTED

D. QUALITY ASSURANCE

1. Miami Dade Building Code Compliance Office (BCCO).

E. MATERIAL CERTIFICATIONS

1. None.

F. STATEMENTS

1. Statement letter of conformance and no financial interest, dated May 28, 2010, signed and sealed by Javad Ahmad, P.E.

G. OTHERS

1. Notice of Acceptance No. **09-0316.12**, issued to AWP, LLC for their Series 580 and 800 Aluminum Dual Action Window – N.I., approved on 05/20/09 and expiring on 12/10/12.

Manuel Perez, P.E.
Product Control Examiner
NOA No. 10-0804.07
Expiration Date: December 10, 2012
Approval Date: November 24, 2010

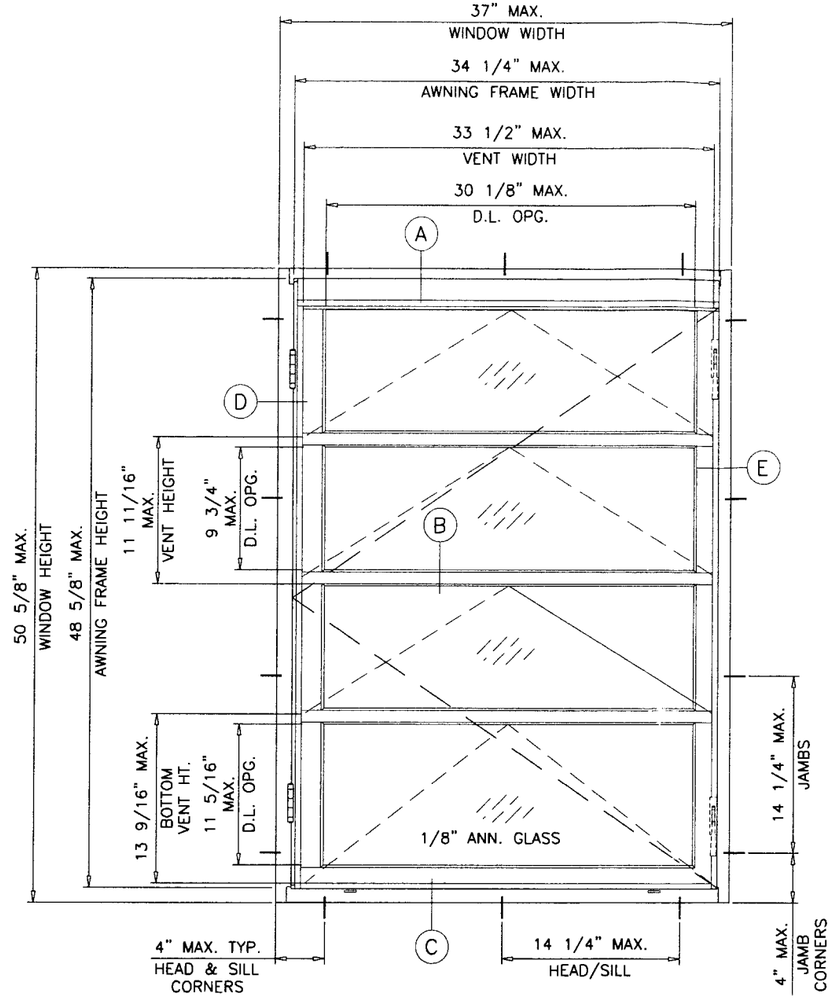

TYPICAL ELEVATION

SERIES 800 OUTSWING AWNING WINDOW

MAXIMUM DESIGN LOAD RATING = + 65.0 PSF
(FOR SIZES SHOWN OR SMALLER) − 65.0 PSF

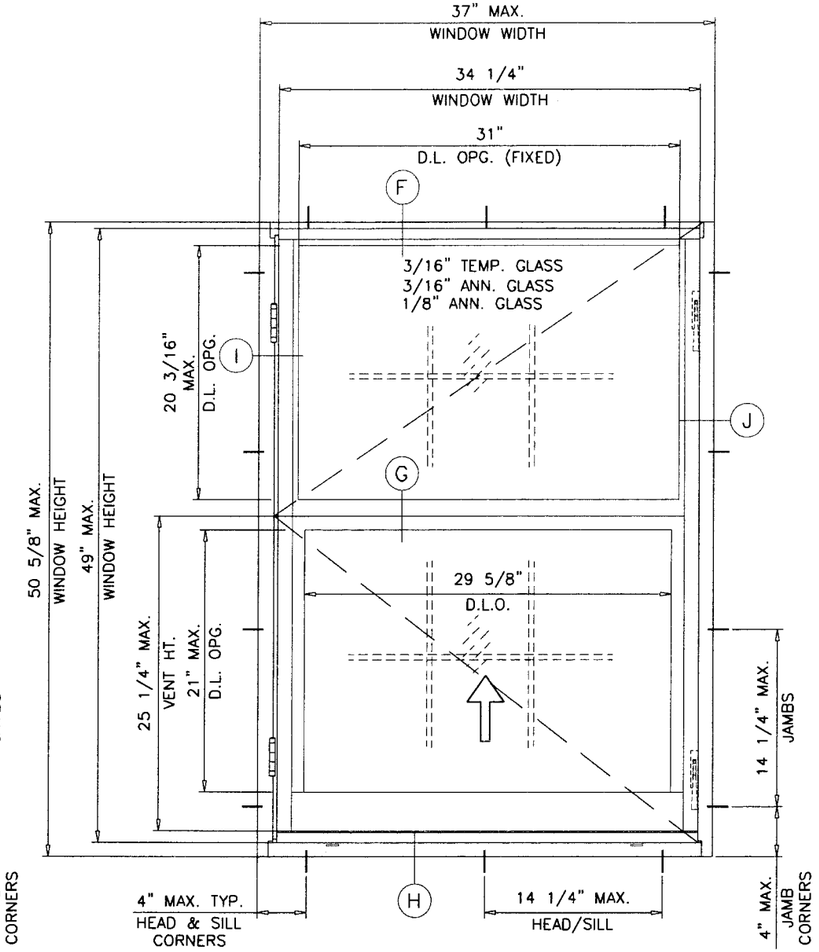

TYPICAL ELEVATION

SERIES 580 OUTSWING SINGLE HUNG WINDOW

MAXIMUM DESIGN LOAD RATING = + 60.0 PSF
(FOR SIZES SHOWN OR SMALLER) − 60.0 PSF

ALUMINUM DUAL ACTION WINDOWS

APPROVAL APPLIES TO SINGLE UNITS OR SIDE BY SIDE COMBINATIONS OF DUAL ACTION/DUAL ACTION OR DUAL ACTION WDW. WITH OTHER WINDOW TYPES IN MODULES OF TWO OR MORE WINDOWS USING MIAMI-DADE COUNTY APPROVED MULLIONS IN BETWEEN. LOWER DESIGN PRESSURE FROM WINDOWS OR MULLION APPROVAL WILL APPLY TO ENTIRE SYSTEM.

THIS PRODUCT HAS BEEN DESIGNED AND TESTED TO COMPLY WITH THE REQUIREMENTS OF THE FLORIDA BUILDING CODE 2007 EDITION INCLUDING HIGH VELOCITY HURRICANE ZONE (HVHZ).

WOOD BUCKS BY OTHERS, MUST BE ANCHORED PROPERLY TO TRANSFER LOADS TO THE STRUCTURE.

ANCHORS SHALL BE AS LISTED, SPACED AS SHOWN ON DETAILS, ANCHORS EMBEDMENT TO BASE MATERIAL SHALL BE BEYOND WALL DRESSING OR STUCCO.

ANCHORING OR LOADING CONDITIONS NOT SHOWN IN THESE DETAILS ARE NOT PART OF THIS APPROVAL.

A LOAD DURATION INCREASE IS USED IN DESIGN OF ANCHORS INTO WOOD ONLY.

MATERIALS INCLUDING BUT NOT LIMITED TO STEEL/METAL SCREWS, THAT COME INTO CONTACT WITH OTHER DISSIMILAR MATERIALS SHALL MEET THE REQUIREMENTS OF 2007 FLORIDA BLDG. CODE SECTION 2003.8.4.

NOTE:
GLASS CAPACITIES ON THIS SHEET ARE BASED ON ASTM E1300-04 (3 SEC. GUSTS) AND FLORIDA BUILDING COMMISSION DECLARATORY STATEMENT DCA05-DEC-219

WINDOWS NOT RATED FOR IMPACT.

INSTALLATION OF THIS PRODUCT IN THE HVHZ AREA REQUIRES THE USE OF APPROVED SHUTTERS OR EXTERNAL PROTECTION DEVICES COMPLYING WITH HVHZ REQUIREMENTS.

INSTALLATION OF THIS SYSTEM OUTSIDE THE HVHZ AREA SHALL MEET THE APPLICABLE REQUIREMENTS FOR WIND BORNE DEBRIS PROTECTION.

MONOLITHIC GLASS
NON IMPACT

Engr: JAVAD AHMAD
CIVIL
FLA. PE # 70592
C.A.N. 3538

PRODUCT REVISE.
Complying with the Florida Building Code
Compliance No. 10-0804.07
Expiration Date DEC. 10, 2012
JUN 0 8 2012
By Manuel Perez
Miami-Dade Product Control Division

AL-FAROOQ CORPORATION
ENGINEERS & PRODUCT DEVELOPMENT
1235 S.W. 87 AVE
MIAMI, FLORIDA 33174
TEL. (305) 264-8100 FAX. (305) 262-6978
COMP-ANL\W07-99AWP

ALUMINUM DUAL ACTION WINDOW (N.I)

ARCH WINDOWS, LLC dba AWP
8130 N.W. 74TH AVE.
MEDLEY, FL. 33166
TEL. (305) 887-2646 FAX (305) 883-1309

revisions:

no	date	by	description
A	02.21.08		REV. PER BCCO COMMENTS
B	02.16.09		UPDATED FOR 2007 FBC
A	05.27.10		MANUF. NAME REVISED

date: 12-11-07
scale: 1"=1'-0"
dr. by: K.Y.
chk. by:

drawing no.
W07-99

sheet 1 of 7

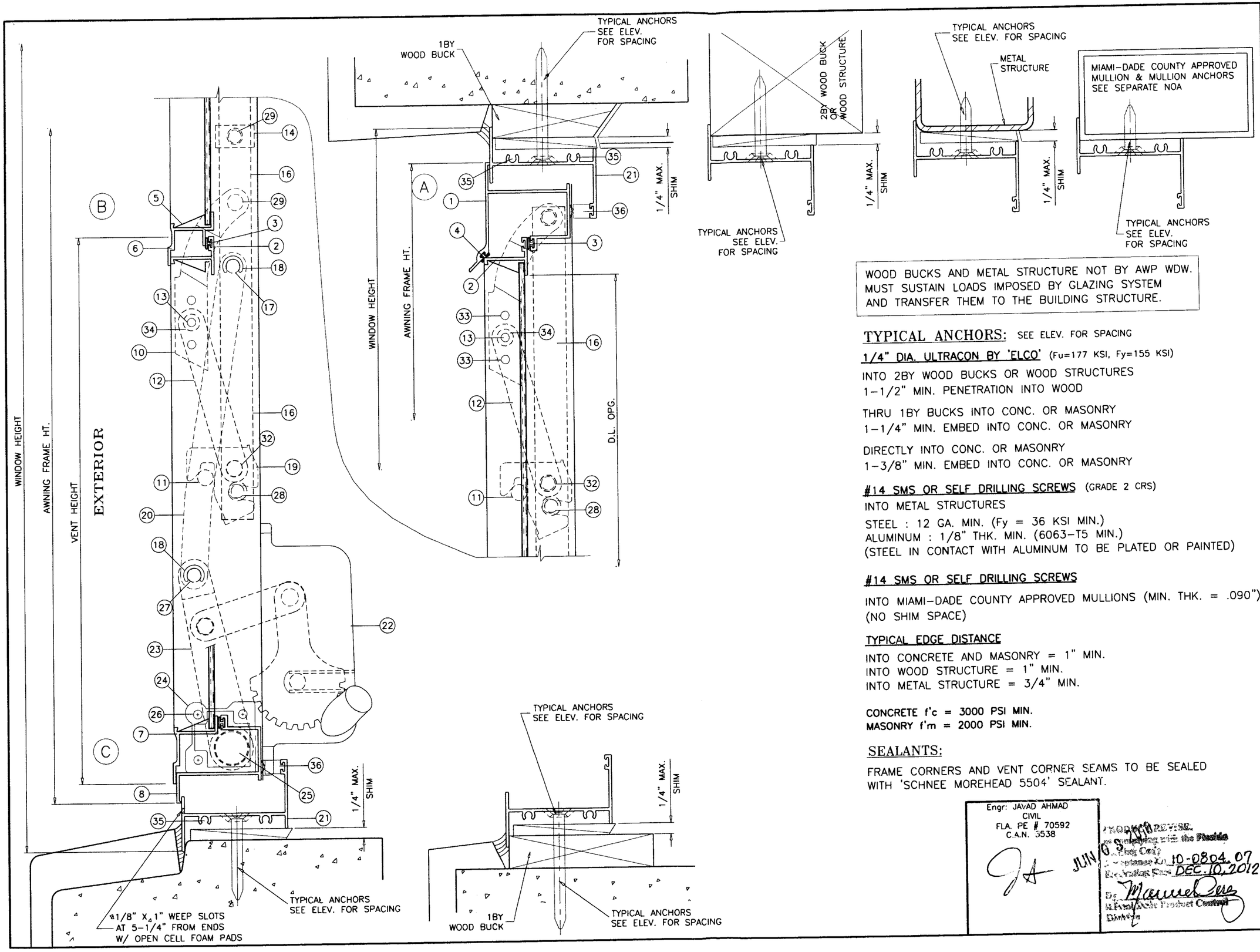

WOOD BUCKS AND METAL STRUCTURE NOT BY AWP WDW. MUST SUSTAIN LOADS IMPOSED BY GLAZING SYSTEM AND TRANSFER THEM TO THE BUILDING STRUCTURE.

TYPICAL ANCHORS: SEE ELEV. FOR SPACING

1/4" DIA. ULTRACON BY 'ELCO' (Fu=177 KSI, Fy=155 KSI)

INTO 2BY WOOD BUCKS OR WOOD STRUCTURES
1-1/2" MIN. PENETRATION INTO WOOD

THRU 1BY BUCKS INTO CONC. OR MASONRY
1-1/4" MIN. EMBED INTO CONC. OR MASONRY

DIRECTLY INTO CONC. OR MASONRY
1-3/8" MIN. EMBED INTO CONC. OR MASONRY

#14 SMS OR SELF DRILLING SCREWS (GRADE 2 CRS)

INTO METAL STRUCTURES

STEEL : 12 GA. MIN. (Fy = 36 KSI MIN.)
ALUMINUM : 1/8" THK. MIN. (6063-T5 MIN.)
(STEEL IN CONTACT WITH ALUMINUM TO BE PLATED OR PAINTED)

#14 SMS OR SELF DRILLING SCREWS

INTO MIAMI-DADE COUNTY APPROVED MULLIONS (MIN. THK. = .090")
(NO SHIM SPACE)

TYPICAL EDGE DISTANCE

INTO CONCRETE AND MASONRY = 1" MIN.
INTO WOOD STRUCTURE = 1" MIN.
INTO METAL STRUCTURE = 3/4" MIN.

CONCRETE f'c = 3000 PSI MIN.
MASONRY f'm = 2000 PSI MIN.

SEALANTS:

FRAME CORNERS AND VENT CORNER SEAMS TO BE SEALED WITH 'SCHNEE MOREHEAD 5504' SEALANT.

Engr: JAVAD AHMAD
CIVIL
FLA. PE # 70592
C.A.N. 3538

JUN 6 2008

PRODUCT REVIEW
In Compliance with the Florida Building Code
Compliance No. 10-0804.07
Expiration Date DEC. 10, 2012
By Manuel Perez
Miami-Dade Product Control
Division

AL-FAROOQ CORPORATION
ENGINEERS & PRODUCT DEVELOPMENT
1235 S.W. 87 AVE
MIAMI, FLORIDA 33174
TEL. (305) 264-8100 FAX. (305) 262-6978
COMP-ANL\W07-99AWP

ALUMINUM DUAL ACTION WINDOW (N.I)

ARCH WINDOWS, LLC dba AWP
8130 N.W. 74TH AVE.
MEDLEY, FL. 33166
TEL. (305) 887-2646 FAX (305) 883-1309

revisions:

no	date	by	description
A	02.21.08		REV. PER BCCO COMMENTS
B	02.16.09		UPDATED FOR 2007 FBC
A	05.27.10		MANUF. NAME REVISED

date: 12-11-07
scale: 1/2" = 1"
dr. by: K.Y.
chk. by:

drawing no.
W07-99

sheet 2 of 7

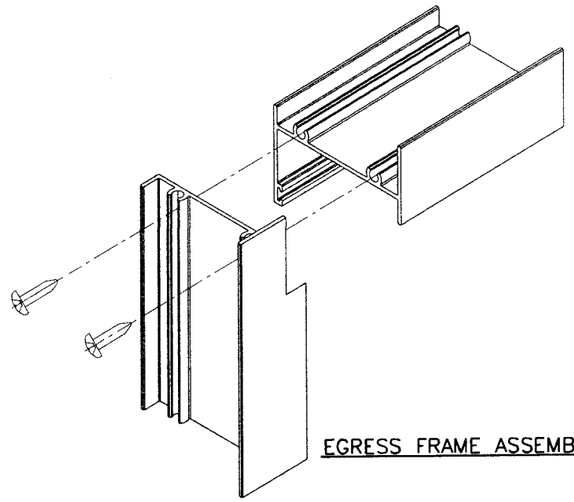

EGRESS FRAME ASSEMBLY

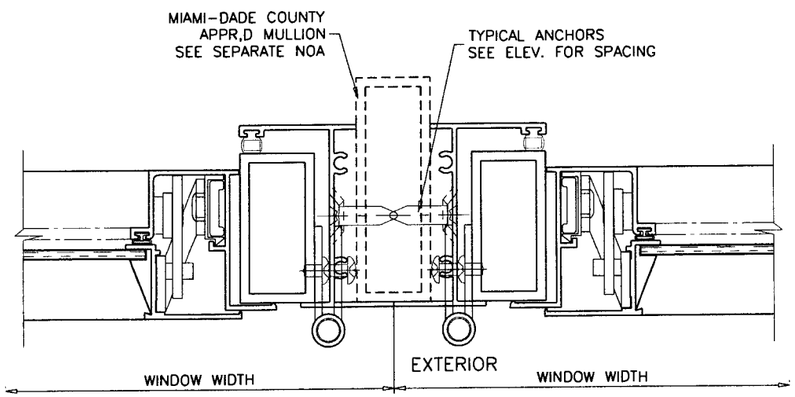

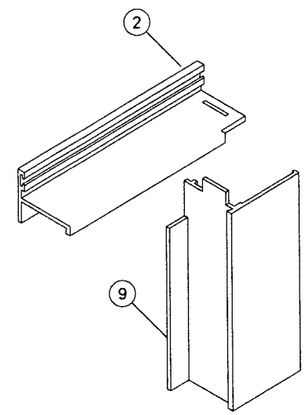

VENT CORNER ASSEMBLY

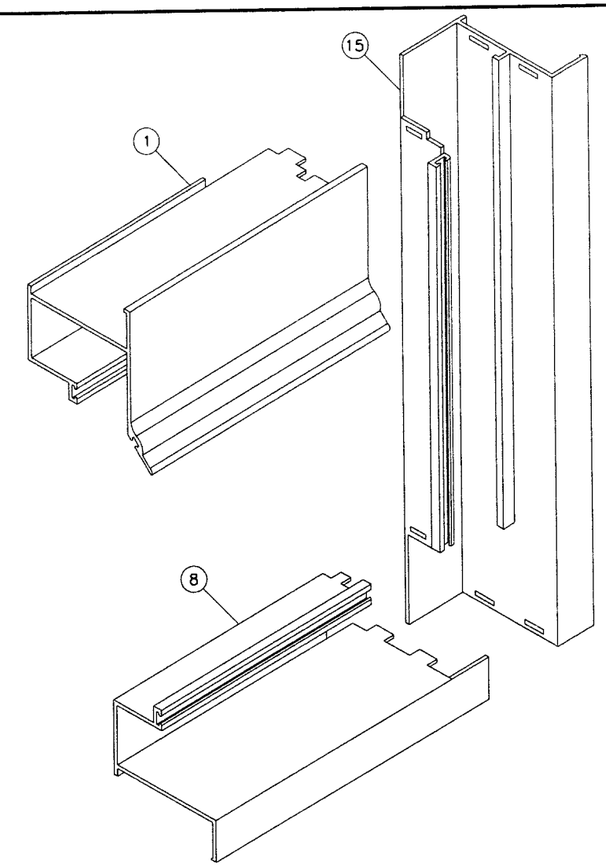

FRAME CORNER ASSEMBLY

FRAME AND VENTS ARE ASSEMBLED USING STAKED MORTISE AND TENON FABRICATION

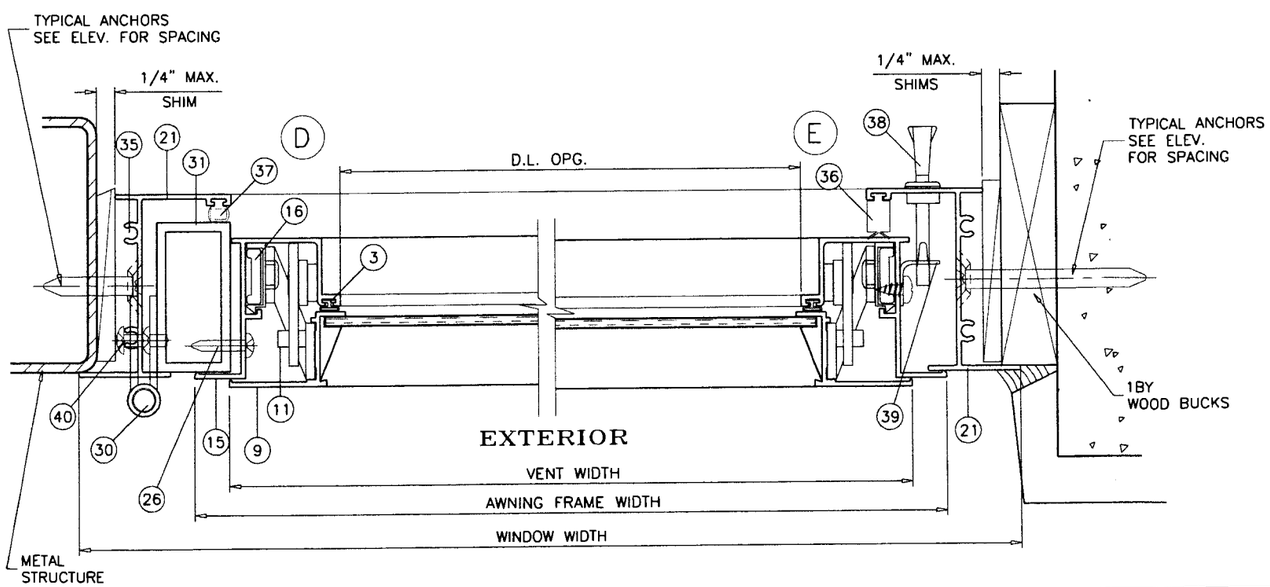

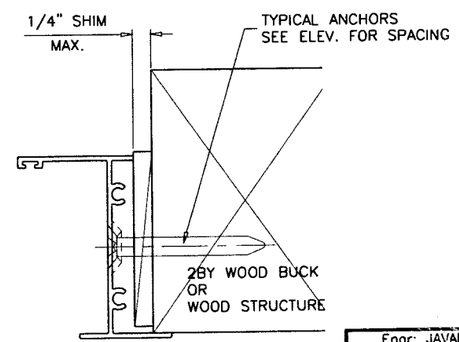

Engr: JAVAD AHMAD
CIVIL
FLA. PE # 70592
C.A.N. 3538

PRODUCT REVISE,
as complying with the Florida
Building Code
Accepted Date 10-0804.07
Expiration Date DEC. 10, 2012
By Manuel Perez
Miami Dade Product Control
Division

AL-FAROOQ CORPORATION
ENGINEERS & PRODUCT DEVELOPMENT
1235 S.W. 87 AVE
MIAMI, FLORIDA 33174
TEL. (305) 264-8100 FAX. (305) 262-6978
COMP-ANL\W07-99AWP

ALUMINUM DUAL ACTION WINDOW (N.I)

ARCH WINDOWS, LLC dba AWP
8130 N.W. 74TH AVE.
MEDLEY, FL. 33166
TEL. (305) 887-2646 FAX (305) 883-1309

revisions:

no	date	by	description
A	02.21.08		REV. PER BCCO COMMENTS
B	02.16.09		UPDATED FOR 2007 FBC
A	05.27.10		MANUF. NAME REVISED

date: 12-11-07
scale: 1/2" = 1"
dr. by: K.Y.
chk. by:

drawing no.
W07-99

sheet 3 of 7

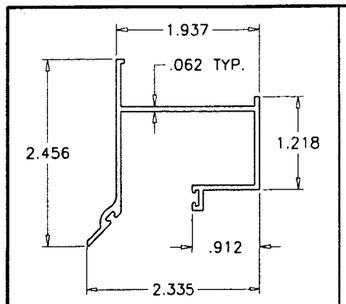

1 FRAME HEAD

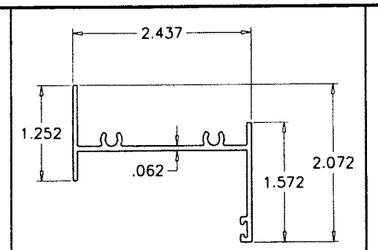

21 EGRESS HEAD/SILL/JAMB

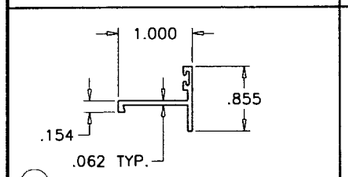

2 VENT TOP

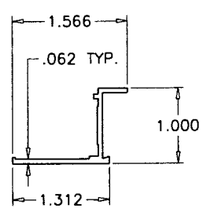

9 VENT JAMB

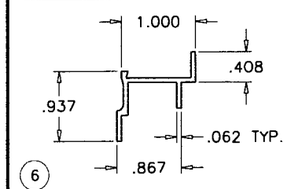

6 CENTER & TOP VENT BOTTOM

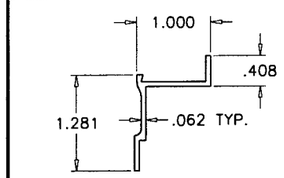

7 BOTTOM VENT BOTTOM

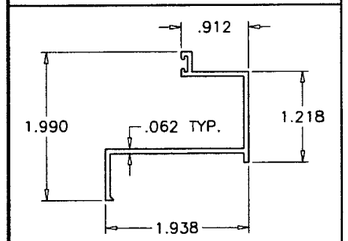

8 FRAME SILL

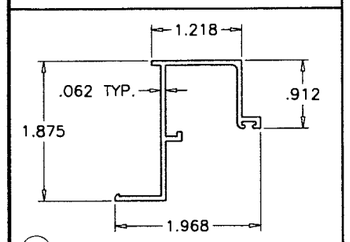

15 FRAME JAMB

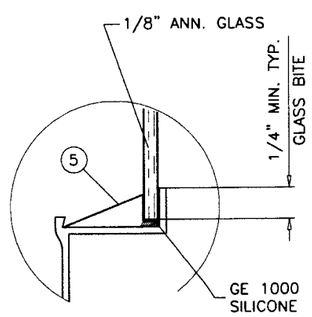

GLAZING OPTIONS

ITEM #	PART #	QUANTITY	DESCRIPTION	MATERIAL	MANF./SUPPLIER
1	YE-5B	1	FRAME HEAD	ALUM. (6063-T5)	-
2	YE-1	1/VENT	VENT TOP	ALUM. (6063-T5)	-
3	YH-818	1/VENT	BULB WEATHERSTRIPPING (.155 X .265)	VINYL	WIBORG OR EQUAL
4	YH-817	1	FRAME HEAD WEATHERSTRIPPING (.150 X .200)	VINYL	WIBORG OR EQUAL
5	YB-2	AS REQD.	GLAZING BEAD	ROLL FORMED ALUM.	FLORIDA SCREEN
6	YE-2	1/VENT	CENTER & TOP VENT BOTTOM	ALUM. (6063-T5)	-
7	YE-14	1	BOTTOM VENT BOTTOM	ALUM. (6063-T5)	-
8	YE-4A	1	FRAME SILL	ALUM. (6063-T5)	-
9	YE-3	2/VENT	VENT JAMB	ALUM. (6063-T5)	-
10	YE-18	2/VENT	VENT HINGE	ALUM. (6063-T5)	YALE OGRON FAB.
11	YH-819	2/VENT	VENT LOCKING PIN	ALUM.	PAN-AMERICAN
12	YE-8	2/VENT	HINGE LINK	ALUM. (6063-T6)	YALE OGRON FAB.
13	YH-811	1/HINGE	HINGE LINK RIVET	ALUM.	PAN-AMERICAN
14	YH-809	2/VENT	SLIDE BAR RETAINER	NYLON	M & M PLASTICS
15	YE-10	2	FRAME JAMB	ALUM. (6063-T5)	-
16	YE-6	1/JAMB	SLIDE BAR	ALUM. (6063-T6)	YALE OGRON FAB.
17	YH-806	2/WINDOW	CONNECTING LINK RIVET	ALUMINUM	PAN-AMERICAN
18	YH-805	AS REQD.	'E' RING	ARC STEEL	INTERSTATE SCREW
19	YH-810	2/VENT	CAM LOCK	ZINC DIE CAST	SOUTHERN DIE CAST
20	YE-59	1/BAR	CONNECTING LINK ARM	ALUM. (6063-T5)	YALE OGRON FAB.
21	YE-173	4	EGRESS HEAD/SILL/JAMB	ALUM. (6063-T5)	-
22	YH-815	1	ATW OFFSET ANGLE OPERATOR (LH OR RH)	ZINC DIE CAST	SOUTHERN DIE CAST
23	YH-803	2	CROSS SHAFT ARM	ZINC DIE CAST	SOUTHERN DIE CAST
24	YH-801	2	CROSS SHAFT BEARING	NYLON	M & M PLASTICS
25	YH-826	1	CROSS SHAFT	STEEL	GALVANIZED
26	YF-10	3	SCREW #8 X 1" PH SMS (AT 10" FROM ENDS & AT CENTER)	CRS	INTERSTATE SCREW
27	YH-804	1/ARM	CROSS SHAFT ARM PIN	ALUMINUM	PAN-AMERICAN
28	YH-820	2/VENT	SLIDE BAR PIN-UPPER	ALUMINUM	PAN-AMERICAN
29	YH-807	2/VENT	SLIDE BAR RIVET	ALUMINUM	PAN-AMERICAN
30	YH-569	2	BUTT HINGE	ZINC ALLOY	GUDEN
31	YE-1020	1	1 X 2 X 1/8" X 48" LONG TUBE	ALUM. (6063-T6)	-
32	YH-814	1/LOCK	CAM LOCK RIVET	ALUMINUM	PAN-AMERICAN
33	YH-813	2/HINGE	VENT HINGE RIVET	ALUMINUM	PAN-AMERICAN
34	YH-812	AS REQD.	HINGE LINK RIVET BUSHING	NYLON	M & M PLASTICS
35	YF-1	8	#10 X 3/4" PH SMS (EGRESS FRAME ASSY)	ZINC PLATED	INTERSTATE SCREW
36	YH-870	AS REQD.	EGRESS FRAME W'STRIPPING	VINYL	-
37	YH-622	AS REQD.	EGRESS FRAME W'STRIPPING AT JAMB (HINGE SIDE)	BULB VINYL	-
38	YH-1420	2	FACE MOUNT LOCK AT 7" FROM ENDS	CAST	TRUTH
39	YH-1419	2	KEEPER AT WDW. FRAME JAMB	ST. STEEL	TRUTH
40	YF-18	6/ HINGE	SCREW #10 X 3/8" PH SMS	CRS	-

Engr: JAVAD AHMAD
CIVIL
FLA. PE # 70592
C.A.N. 3538

PRODUCT REVISE.
In Complying with the Florida Building Code
Acceptance No. 10-0804.07
Expiration Date DEC 10, 2012
By Manuel Perez
Miami-Dade Product Control Division

AL-FAROOQ CORPORATION
ENGINEERS & PRODUCT DEVELOPMENT
1235 S.W. 87 AVE
MIAMI, FLORIDA 33174
TEL. (305) 264-8100 FAX. (305) 262-6978
COMP-ANL\W07-99AWP

ALUMINUM DUAL ACTION WINDOW (N.I.)

ARCH WINDOWS, LLC dba AWP
8130 N.W. 74TH AVE.
MEDLEY, FL. 33166
TEL. (305) 887-2646 FAX (305) 883-1309

revisions:

no	date	by	description
A	02.21.08		REV. PER BCCO COMMENTS
B	02.16.09		UPDATED FOR 2007 FBC
A	05.27.10		MANUF. NAME REVISED

date: 12-11-07
scale: 1/2" = 1"
dr. by: K.Y.
chk. by:

drawing no.
W07-99

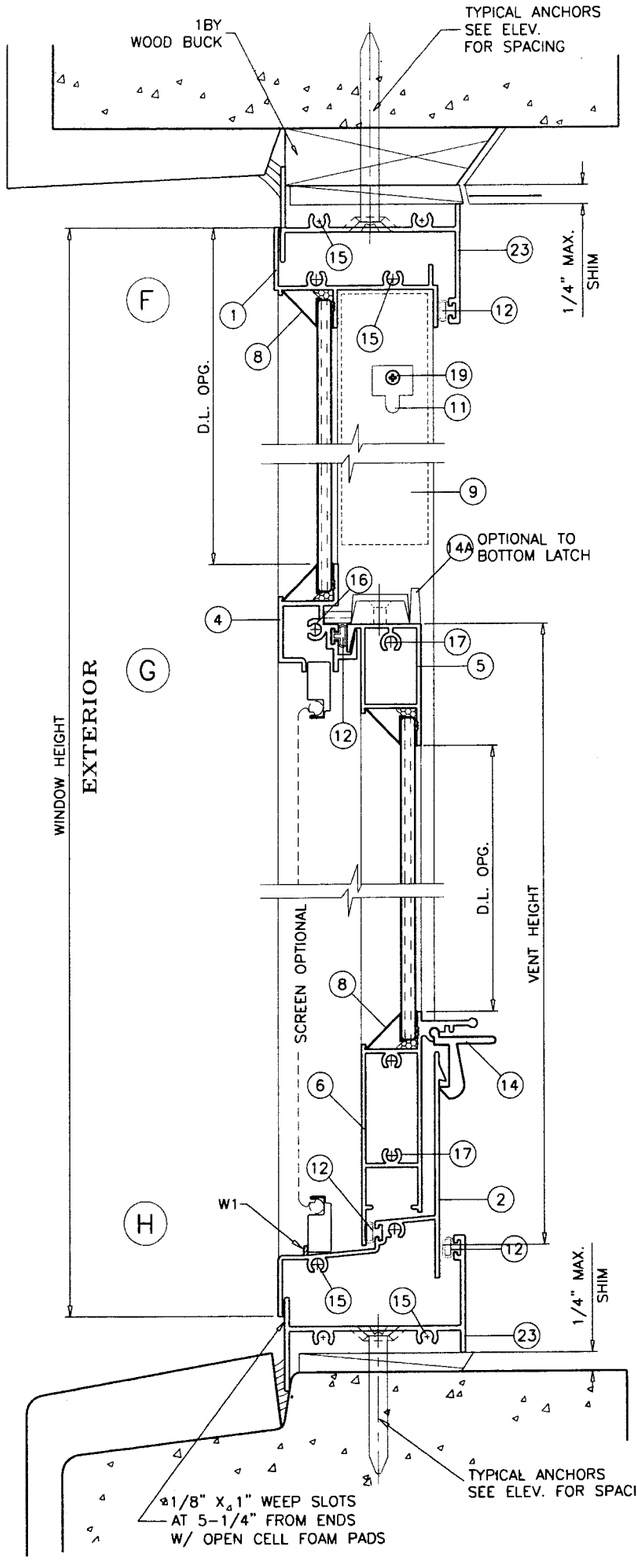

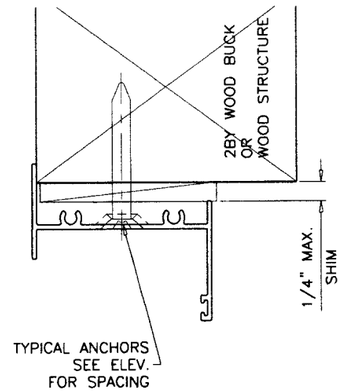

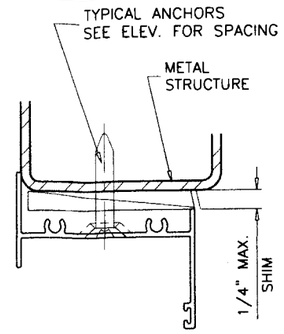

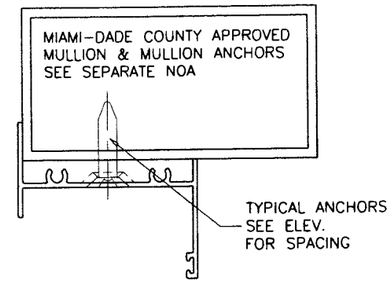

WOOD BUCKS AND METAL STRUCTURE NOT BY AWP WDW.
MUST SUSTAIN LOADS IMPOSED BY GLAZING SYSTEM
AND TRANSFER THEM TO THE BUILDING STRUCTURE.

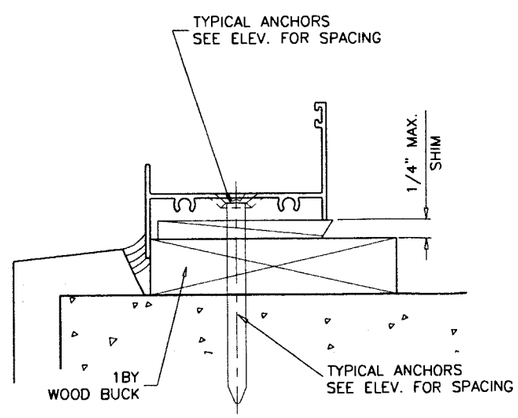

TYPICAL ANCHORS: SEE ELEV. FOR SPACING

1/4" DIA. ULTRACON BY 'ELCO' (Fu=177 KSI, Fy=155 KSI)

INTO 2BY WOOD BUCKS OR WOOD STRUCTURES
1-1/2" MIN. PENETRATION INTO WOOD

THRU 1BY BUCKS INTO CONC. OR MASONRY
1-1/4" MIN. EMBED INTO CONC. OR MASONRY

DIRECTLY INTO CONC. OR MASONRY
1-3/8" MIN. EMBED INTO CONC. OR MASONRY

#14 SMS OR SELF DRILLING SCREWS (GRADE 2 CRS)

INTO METAL STRUCTURES

STEEL : 12 GA. MIN. (Fy = 36 KSI MIN.)
ALUMINUM : 1/8" THK. MIN. (6063-T5 MIN.)
(STEEL IN CONTACT WITH ALUMINUM TO BE PLATED OR PAINTED)

#14 SMS OR SELF DRILLING SCREWS

INTO MIAMI-DADE COUNTY APPROVED MULLIONS (MIN. THK. = .090")
(NO SHIM SPACE)

TYPICAL EDGE DISTANCE

INTO CONCRETE AND MASONRY = 1" MIN.
INTO WOOD STRUCTURE = 1" MIN.
INTO METAL STRUCTURE = 3/4" MIN.

CONCRETE f'c = 3000 PSI MIN.
MASONRY f'm = 2000 PSI MIN.

SEALANT:

ALL LOWER FRAME AND VENT CORNERS, AND HEADS OF INSTALLATION SCREWS AT SILL TO BE SEALED WITH ALUMINUM COLORED SEALANT, SCHNEE MOREHEAD 5504 OR EQUIV.

PADS:

ONE 1/4" X 3/4" ADHESIVE CLOSED CELL FOAM PAD AT EACH END OF FIXED MTG. RAIL.

WEEPHOLES:

W1 = 3/4" WEEP NOTCH AT EACH END

Engr: JAVAD AHMAD
CIVIL
FLA. PE # 70592
C.A.N. 3538

PROPOSED REVISE.
as complying with the Florida
Building Code
Accepted No. 10-0804.07
Expiration Date DEC 10, 2012
By Manuel Perez
Miami-Dade Product Control
Division

AL-FAROOQ CORPORATION
ENGINEERS & PRODUCT DEVELOPMENT
1235 S.W. 87 AVE
MIAMI, FLORIDA 33174
TEL. (305) 264-8100 FAX. (305) 262-6978
COMP-ANL\W07-99AWP

ALUMINUM DUAL ACTION WINDOW (N.I)

ARCH WINDOWS, LLC dba AWP
8130 N.W. 74TH AVE.
MEDLEY, FL. 33166
TEL. (305) 887-2646 FAX (305) 883-1309

revisions:

no	date	by	description
A	02.21.08		REV. PER BCCO COMMENTS
B	02.16.09		UPDATED FOR 2007 FBC
A	05.27.10		MANUF. NAME REVISED

date: 12-11-07
scale: 1/2" = 1"
dr. by: K.Y.
chk. by:

drawing no.
W07-99

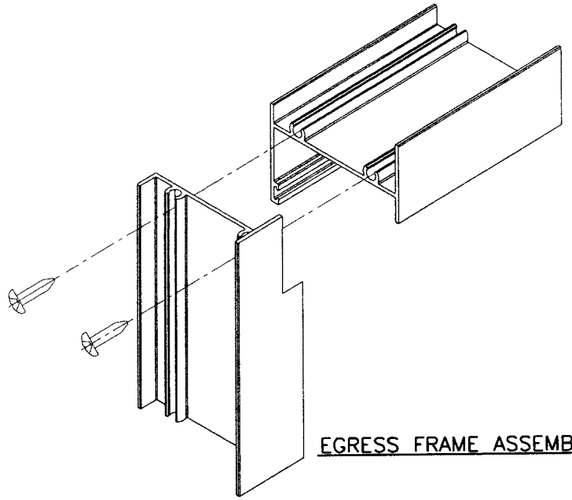

EGRESS FRAME ASSEMBLY

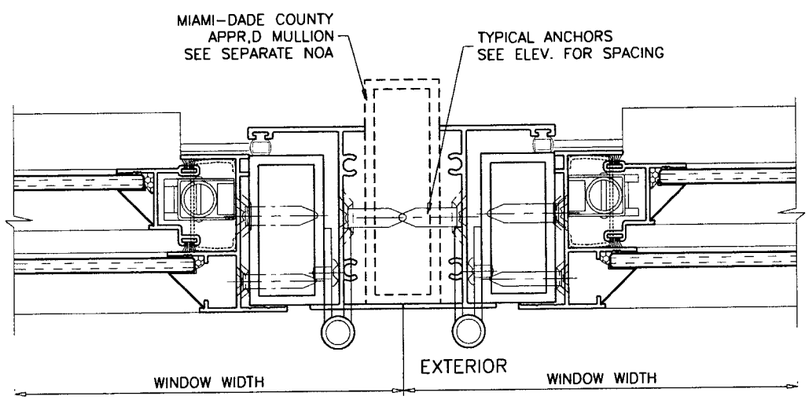

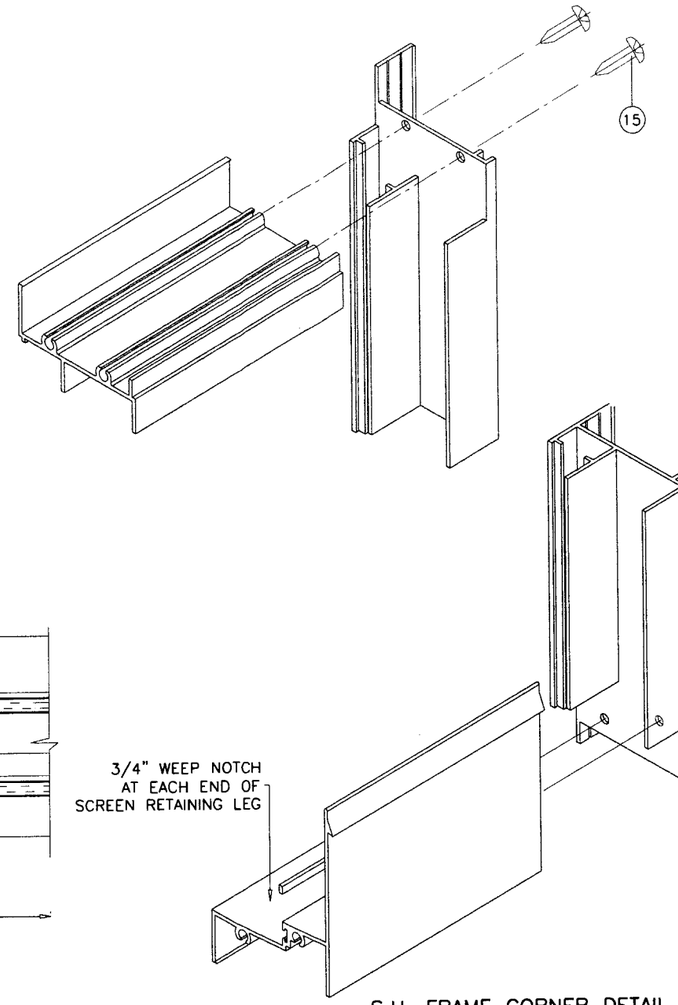

S.H. FRAME CORNER DETAIL

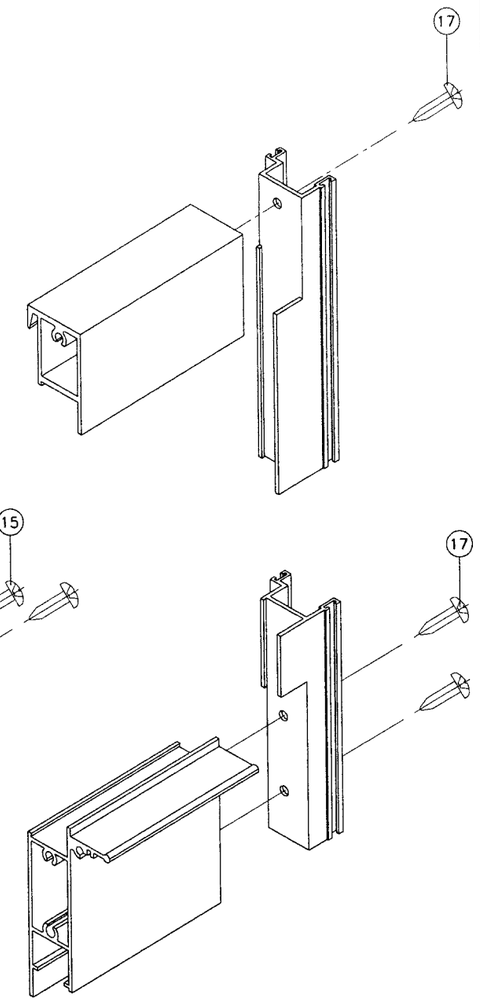

S.H. VENT CORNER DETAIL

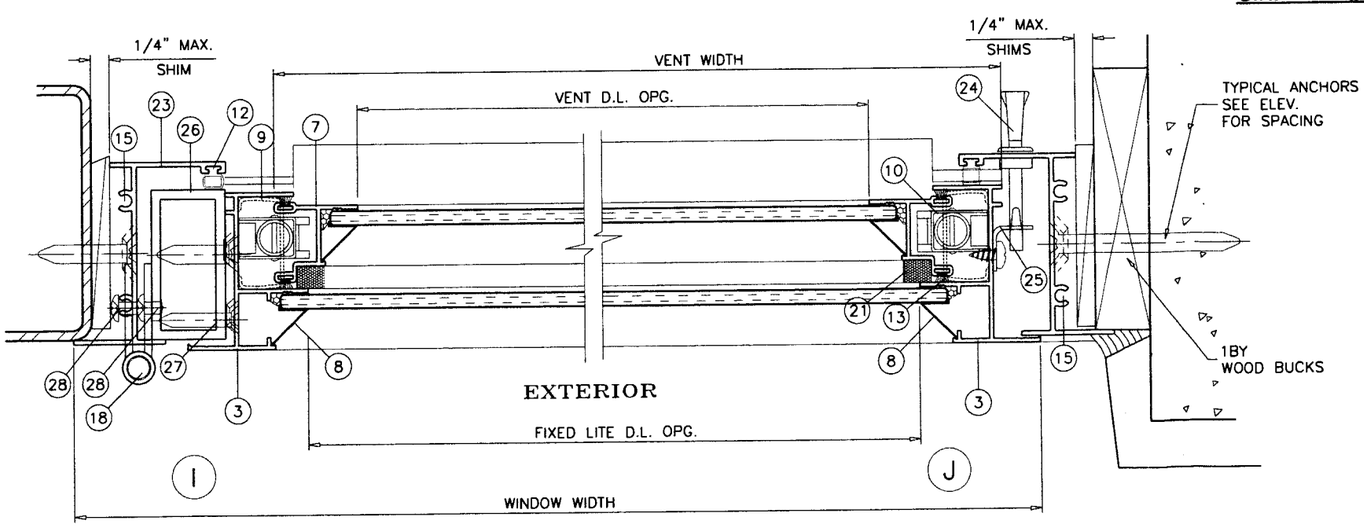

Engr: JAVAD AHMAD
CIVIL
FLA. PE # 70592
C.A.N. 3538

PRODUCT REVISE
as complying with the Florida
Building Code
Acceptance No. 10-0804.07
Expiration Date DEC. 10, 2012
By Manuel Perez
Miami-Dade Product Control
Date

AL-FAROOQ CORPORATION
ENGINEERS & PRODUCT DEVELOPMENT
1235 S.W. 87 AVE
MIAMI, FLORIDA 33174
TEL. (305) 264-8100 FAX. (305) 262-6978
COMP-ANL\W07-99AWP

ALUMINUM DUAL ACTION WINDOW (N.I)

ARCH WINDOWS, LLC dba AWP
8130 N.W. 74TH AVE.
MEDLEY, FL. 33166
TEL. (305) 887-2646 FAX (305) 883-1309

revisions:

no	date	by	description
A	02.21.08		REV. PER BCCO COMMENTS
B	02.16.09		UPDATED FOR 2007 FBC
A	05.27.10		MANUF. NAME REVISED

date: 12-11-07
scale: 1/2" = 1"
dr. by: K.Y.
chk. by:

drawing no.
W07-99

sheet 6 of 7

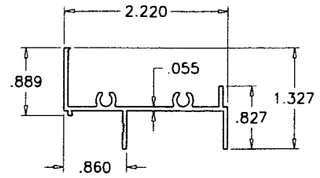

1 FRAME HEAD

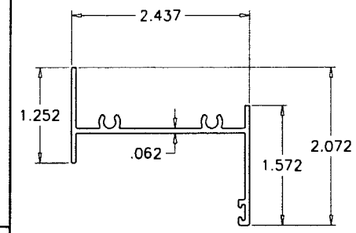

23 SUB-FRAME HEAD/SILL/JAMB

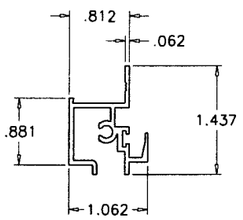

4 FIXED RAIL

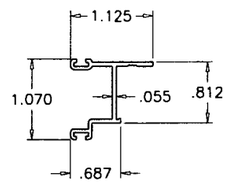

7 VENT SIDE RAIL

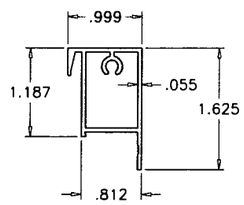

5 VENT TOP RAIL

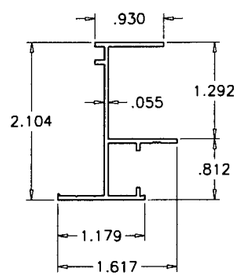

3 FRAME JAMB

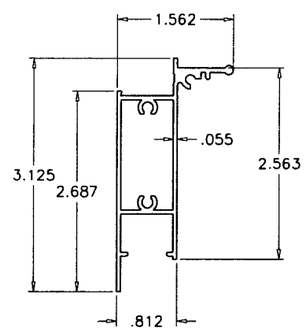

6 VENT BOTTOM RAIL

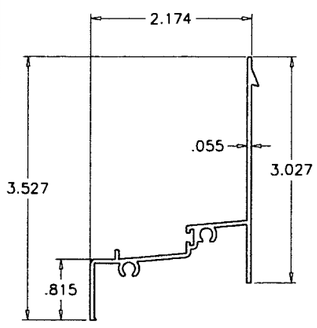

2 FRAME SILL

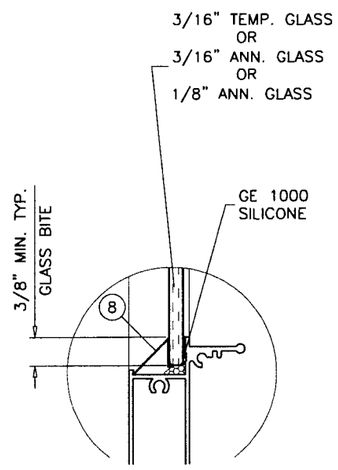

GLAZING OPTIONS

ITEM	PART #	QUANTITY	DESCRIPTION	MATERIAL/REMARKS
1	YE-169	1	FRAME HEAD	ALUM. (6063-T6)
2	YE-165	1	FRAME SILL	ALUM. (6063-T6)
3	YE-102	2	FRAME JAMB	ALUM. (6063-T6)
4	YE-152	1	MEETING RAIL	ALUM. (6063-T6)
5	YE-151	1	VENT TOP RAIL	ALUM. (6063-T6)
6	YE-163	1	VENT BOTTOM RAIL	ALUM. (6063-T6)
7	YE-92	2	VENT JAMB	ALUM. (6063-T6)
8	YB-6	AS REQ'D.	ROLL FORMED GLAZING BEAD	ALUMINUM
9	YH-528	2/VENT	SASH STOP (3-1/4" LONG)	RIGID VINYL
10	-	2/VENT	BLOCK & TACKLE BALANCE ASSEMBLY	-
11	YH-505	2/VENT	BALANCE CLIP	ALUMINUM
12	YH-622	AS REQ'D.	BULB VINYL WEATHERSTRIP (VENT/MEETING RAIL)	SINGLE ROW
13	YH-4004	AS REQ'D.	ULTRAFAB .187" x .250" FIN SEAL WEATHERSTRIP	WOOL (SINGLE ROW)
14	YH-504	2/VENT	SPRING LOADED VENT CAM LOCK	NYLON OR CELCON
14A	YH-515	2	SWEEP LOCK (OPTIONAL)	CAST (ZAMAK)
15	YF-1	16	#10 x 3/4" PH. SMS. FRAME/SUB-FRAME ASSY. SCREW	CAD PLATED CRS.
16	YF-10	2	#8 x 1" PH. SMS. MEETING RAIL	CAD PLATED CRS.
17	YF-12	4/VENT	#8 x 1-1/4" PH. SMS. VENT ASSY. SCREW	CAD PLATED CRS.
18	YH-569	2	BUTT HINGE	ZINC ALLOY (GUDEN)
19	YF-6	1/CLIP	#10 x 1/4" PH. SMS. POINT "B" BALANCE CLIP SCREW	CAD PLATED CRS.
20	YF-14	2/LOCK	#8 x 5/8" OH. SMS. SWEEP LOCK SCREW	CAD PLATED CRS.
21	YC-15SP	2/VENT	SELF-ADHESIVE FOAM PAD (0.375 x 0.31 x 0.75" LG.)	-
22	YH-519	2/VENT	BALANCE CAM (RIGHT AND LEFT)	PLASTIC
23	YE-173	4	SUB-FRAME HEAD/JAMB/SILL	ALUM. (6063-T5)
24	YH-1420	2	FACE MOUNT LOCK, AT SUB-FRAME 7" FROM EACH END	CAST (TRUTH)
25	YH-1419	2	KEEPER, AT WINDOW FRAME JAMB FACING LOCK	S. STEEL (TRUTH)
26	YE-1020	1	1 x 2 x 1/8 x 48" LONG TUBE	ALUM. (6063-T6)
27	YF-10	3	#8 x 1" PH. SMS. (10" EA. END & CENTER)	CAD PLATED CRS.
28	YF-18	6/HINGE	#10 x 3/8" PH. SMS.	CAD PLATED CRS.

Engr: JAVAD AHMAD
CIVIL
FLA. PE # 70592
C.A.N. 3536

JUN 0

PRODUCT REVISE.
Accepting with the Florida
Building Code
Acceptance No. 10-0804.07
Expiration Date DEC.10,2012
Miami-Dade Product Control
Division

AL-FAROOQ CORPORATION
ENGINEERS & PRODUCT DEVELOPMENT
1235 S.W. 87 AVE
MIAMI, FLORIDA 33174
TEL. (305) 264-8100 FAX. (305) 262-6978
COMP-ANL\W07-99AWP

ALUMINUM DUAL ACTION WINDOW (N.I)

ARCH WINDOWS, LLC dba AWP
8130 N.W. 74TH AVE.
MEDLEY, FL. 33166
TEL. (305) 887-2646 FAX (305) 883-1309

revisions:

no	date	by	description
A	02.21.08		REV. PER BCCO COMMENTS
B	02.16.09		UPDATED FOR 2007 FBC
A	05.27.10		MANUF. NAME REVISED

date: 12-11-07
scale: 1/2" = 1"
dr. by: K.Y.
chk. by:

drawing no.
W07-99

sheet 7 of 7