MIAMI-DADE COUNTY
BUILDING CODE COMPLIANCE OFFICE (BCCO)
PRODUCT CONTROL DIVISION

MIAMI-DADE COUNTY, FLORIDA
METRO-DADE FLAGLER BUILDING
140 WEST FLAGLER STREET, SUITE 1603
MIAMI, FLORIDA 33130-1563
(305) 375-2901 FAX (305) 372-6339
www.miamidade.gov/buildingcode

NOTICE OF ACCEPTANCE (NOA)

Arch Windows, LLC dba AWP
8130 NW 74th Avenue
Medley, FL 33166

SCOPE:

This NOA is being issued under the applicable rules and regulations governing the use of construction materials. The documentation submitted has been reviewed by Miami-Dade County Product Control Division and accepted by the Board of Rules and Appeals (BORA) to be used in Miami Dade County and other areas where allowed by the Authority Having Jurisdiction (AHJ).

This NOA shall not be valid after the expiration date stated below. The Miami-Dade County Product Control Division (In Miami Dade County) and/or the AHJ (in areas other than Miami Dade County) reserve the right to have this product or material tested for quality assurance purposes. If this product or material fails to perform in the accepted manner, the manufacturer will incur the expense of such testing and the AHJ may immediately revoke, modify, or suspend the use of such product or material within their jurisdiction. BORA reserves the right to revoke this acceptance, if it is determined by Miami-Dade County Product Control Division that this product or material fails to meet the requirements of the applicable building code. This product is approved as described herein, and has been designed to comply with the Florida Building Code, including the High Velocity Hurricane Zone.

DESCRIPTION: Series "10000 Tilt" White PVC Single Hung Window – L. M. I.

APPROVAL DOCUMENT: Drawing No. **W09–10**, titled "Series 10000 PVC Single Hung Tilt Wdw. (L.M.I./ S.M.I.)", sheets 1 to 8 of 8, dated 02/12/09 with revision B dated 05/27/10, prepared by Al–Farooq Corporation, signed and sealed by Javad Ahmad, P. E., bearing the Miami–Dade County Product Control Revision stamp with the Notice of Acceptance number and expiration date by the Miami–Dade County Product Control Division.

MISSILE IMPACT RATING: Large and Small Missile Impact Resistant

LABELING: Each unit shall bear a permanent label with the manufacturer's name or logo, city, state and following statement: "Miami-Dade County Product Control Approved", unless otherwise noted herein.

RENEWAL of this NOA shall be considered after a renewal application has been filed and there has been no change in the applicable building code negatively affecting the performance of this product.

TERMINATION of this NOA will occur after the expiration date or if there has been a revision or change in the materials, use, and/or manufacture of the product or process. Misuse of this NOA as an endorsement of any product, for sales, advertising or any other purposes shall automatically terminate this NOA. Failure to comply with any section of this NOA shall be cause for termination and removal of NOA.

ADVERTISEMENT: The NOA number preceded by the words Miami-Dade County, Florida, and followed by the expiration date may be displayed in advertising literature. If any portion of the NOA is displayed, then it shall be done in its entirety.

INSPECTION: A copy of this entire NOA shall be provided to the user by the manufacturer or its distributors and shall be available for inspection at the job site at the request of the Building Official.

This NOA **revises and supersedes NOA # 10-0203.03,** and consists of this page 1 and evidence pages E-1 and E-2, as well as approval document mentioned above.

The submitted documentation was reviewed by **Manuel Perez, P.E.**

MIAMI-DADE COUNTY APPROVED

NOTICE OF ACCEPTANCE: EVIDENCE SUBMITTED

A. DRAWINGS

1. Manufacturer's die drawings and sections.
2. Drawing No **W09–10**, titled "Series 10000 PVC Single Hung Tilt Wdw. (L.M.I./ S.M.I.)", sheets 1 to 8 of 8, dated 02/12/09 with revision B dated 05/27/10, prepared by Al–Farooq Corporation, signed and sealed by Javad Ahmad, P. E.

B. TESTS

1. Test reports on: 1) Air Infiltration Test, per FBC, TAS 202–94
   2) Uniform Static Air Pressure Test, Loading per FBC TAS 202–94
   3) Water Resistance Test, per FBC, TAS 202–94
   4) Large Missile Impact Test per FBC, TAS 201-94
   5) Cyclic Wind Pressure Loading per FBC, TAS 203-94
   6) Forced Entry Test, per FBC 2411.3.2.1 (b) and TAS 202–94

   along with marked–up drawings and installation diagram of a PVC single hung window, prepared by Fenestration Testing Laboratory, Inc., Test Report No. **FTL 5952** dated 09/14/09, signed and sealed by Julio E. Gonzalez, P. E.
   (Submitted under previous NOA No. 10–0203.03)
2. Test reports on: 1) Air Infiltration Test, per FBC, TAS 202–94
   2) Uniform Static Air Pressure Test, Loading per FBC TAS 202–94
   3) Water Resistance Test, per FBC, TAS 202–94
   4) Large Missile Impact Test per FBC, TAS 201-94
   5) Cyclic Wind Pressure Loading per FBC, TAS 203-94
   6) Forced Entry Test, per FBC 2411.3.2.1 (b) and TAS 202–94

   along with marked–up drawings and installation diagram of a PVC single hung window, prepared by Fenestration Testing Laboratory, Inc., Test Report No. **FTL 5666** dated 09/12/08, signed and sealed by Carlos S. Rionda, P. E.
   (Submitted under previous NOA No. 09–0223.07)

C. CALCULATIONS

1. Anchor verification calculations and structural analysis, complying with FBC–2007, dated 01/18/10, prepared, signed and sealed by Javad Ahmad, P. E.
   Complies with ASTM E1300–04

D. QUALITY ASSURANCE

1. Miami–Dade Building Code Compliance Office (BCCO).

Manuel Perez

Manuel Perez, P.E.
Product Control Examiner
NOA No. 10-0804.10
Expiration Date: April 22, 2014
Approval Date: November 24, 2010

NOTICE OF ACCEPTANCE: EVIDENCE SUBMITTED

E. MATERIAL CERTIFICATIONS

1. Notice of Acceptance No. **06–1220.01** issued to Spectus Systems for "**White Rigid PVC Exterior Extrusions for Windows and Doors**" dated 01/11/07, expiring on 12/26/11.
2. Notice of Acceptance No. **06–0216.06** issued to Solutia Inc. for their "**Saflex IIIG Clear or colored interlayer**" dated 05/04/06, expiring on 05/21/11.

F. STATEMENTS

1. Statement letter of conformance and no financial interest, 05/28/10, signed and sealed by Javad Ahmad, P.E.
2. Laboratory compliance letter for Test Report No. **FTL 5952**, issued by Fenestration Testing Laboratory, Inc., dated September 14, 2009, signed and sealed by Julio E. Gonzalez P. E.
   (Submitted under previous NOA No.10–0203.03)
3. Laboratory compliance letter for Test Report No. **FTL 5666**, issued by Fenestration Testing Laboratory, Inc., dated September 12, 2008, signed and sealed by Carlos S. Rionda, P. E.
   (Submitted under previous NOA No.09–0223.07)
4. Proposal No. **08–1867R1** issued by BCCO, dated 02/10/09, signed by Manny Perez, P. E.

G. OTHERS

1. Notice of Acceptance No. **10-0203.03**, issued to AWP, LLC for their Series "10000 Tilt" PVC Single Hung Window – L.M.I., approved on 04/14/10 and expiring on 04/22/14.

Manuel Perez, P.E.
Product Control Examiner
NOA No. 10-0804.10
Expiration Date: April 22, 2014
Approval Date: November 24, 2010

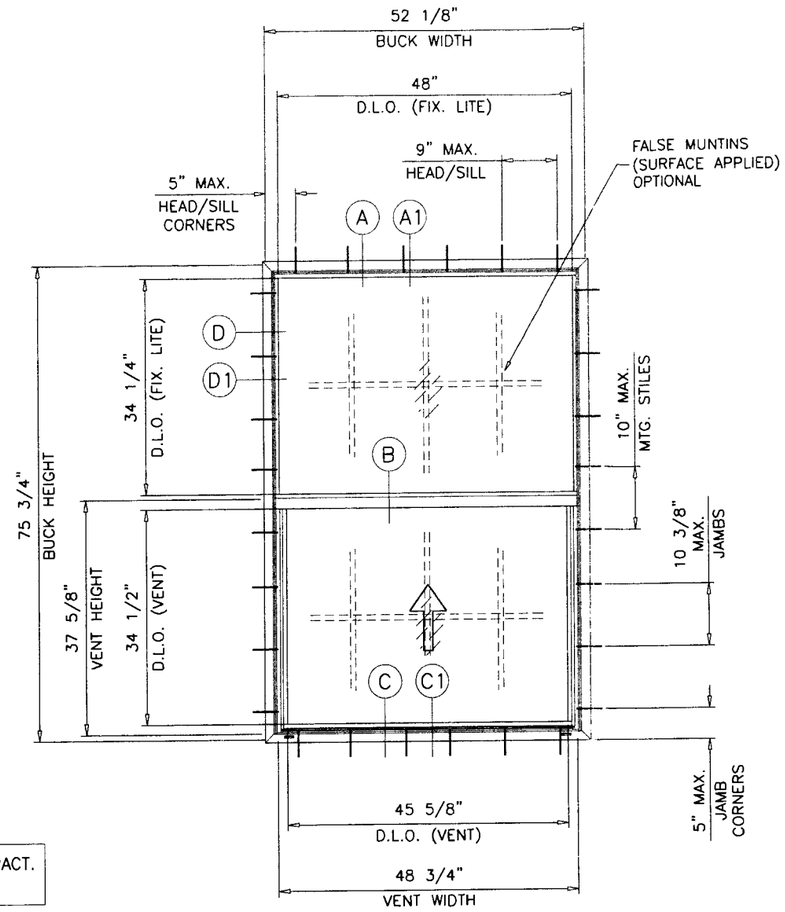

FLANGE & FLUSH FRAME

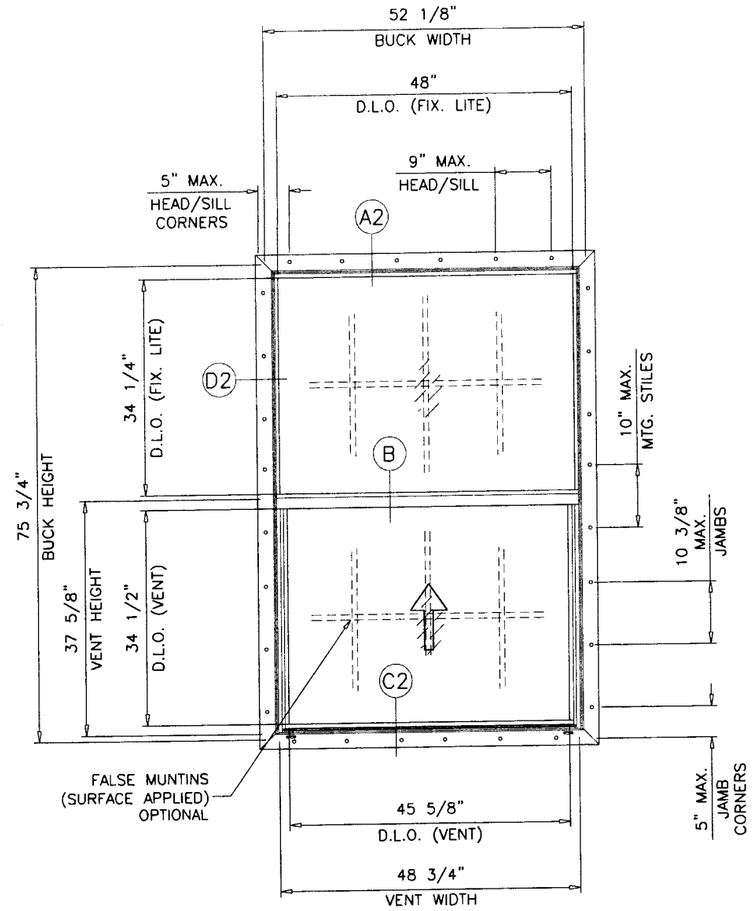

FIN FRAME

TYPICAL ELEVATION

THESE WINDOWS ARE RATED FOR LARGE & SMALL MISSILE IMPACT. SHUTTERS ARE NOT REQUIRED.

SERIES 10000 PVC SINGLE HUNG TILT WINDOW

DESIGN LOAD RATINGS FOR THESE WINDOWS TO BE AS PER CHARTS SHOWN ON SHEET 2.

APPROVAL APPLIES TO SINGLE UNITS OR SIDE BY SIDE COMBINATIONS OF S.H./S.H. OR SINGLE HUNG WITH OTHER WINDOW TYPES IN MODULES OF TWO OR MORE WINDOWS USING MIAMI-DADE COUNTY APPROVED MULLIONS IN BETWEEN. LOWER DESIGN PRESSURE FROM WINDOWS OR MULLION APPROVAL WILL APPLY TO ENTIRE SYSTEM.

THIS PRODUCT HAS BEEN DESIGNED AND TESTED TO COMPLY WITH THE REQUIREMENTS OF THE FLORIDA BUILDING CODE 2007 EDITION INCLUDING HIGH VELOCITY HURRICANE ZONE (HVHZ).

WOOD BUCKS BY OTHERS, MUST BE ANCHORED PROPERLY TO TRANSFER LOADS TO THE STRUCTURE.

ANCHORS SHALL BE AS LISTED, SPACED AS SHOWN ON DETAILS, ANCHORS EMBEDMENT TO BASE MATERIAL SHALL BE BEYOND WALL DRESSING OR STUCCO.

ANCHORING OR LOADING CONDITIONS NOT SHOWN IN THESE DETAILS ARE NOT PART OF THIS APPROVAL.

A LOAD DURATION INCREASE IS USED IN DESIGN OF ANCHORS INTO WOOD ONLY.

MATERIALS INCLUDING BUT NOT LIMITED TO STEEL/METAL SCREWS, THAT COME INTO CONTACT WITH OTHER DISSIMILAR MATERIALS SHALL MEET THE REQUIREMENTS OF 2007 FLORIDA BLDG. CODE SECTION 2003.8.4.

INSULATING LAM. GLASS
LARGE & SMALL MISSILE IMPACT

Engr: JAVAD AHMAD
CIVIL
FLA. PE # 70592
C.A.N. 3538

JUN 03 2010

PRODUCT REVISE.
as complying with the Florida
Building Code
Acceptance No. 10-0804.10
Expiration Date APRIL 22, 2014
Miami-Dade Product Control
Division

AL-FAROOQ CORPORATION
ENGINEERS & PRODUCT DEVELOPMENT
1235 S.W. 87 AVE
MIAMI, FLORIDA 33174
TEL. (305) 264-8100 FAX. (305) 262-6978

COMP-ANL\W09-10AWP

SERIES 10000 PVC SINGLE HUNG TILT WDW. (L.M.I./S.M.I.)

ARCH WINDOWS, LLC dba AWP
8130 N.W. 74TH AVE.
MEDLEY, FL. 33166
TEL. (305) 887-2646 FAX (305) 883-1309

revisions:

no	date	by	description
A	09.30.09		GENERAL REVISION
B	05.27.10		MANUF. NAME REVISED

date: 02-12-09
scale: 1/2"=1'-0"
dr. by: HAMID
chk. by:

drawing no.
W09-10

sheet 1 of 8

EQUAL LITES WINDOWS

DESIGN LOAD CAPACITY - PSF

BUCK DIMS.		GLASS TYPES 'A' & 'A1'		GLASS TYPES 'B' & 'B1'	
WIDTH	HEIGHT	EXT.(+)	INT.(-)	EXT.(+)	INT.(-)
18-1/8"	25" (4)	70.0	70.0	65.0	65.0
25-1/2"		70.0	70.0	65.0	65.0
31"		70.0	70.0	65.0	65.0
36"		70.0	70.0	65.0	65.0
41"		70.0	70.0	65.0	65.0
47"		70.0	70.0	65.0	65.0
52-1/8"		70.0	70.0	65.0	65.0
18-1/8"	37-3/8" (4)	70.0	70.0	65.0	65.0
25-1/2"		70.0	70.0	65.0	65.0
31"		70.0	70.0	65.0	65.0
36"		70.0	70.0	65.0	65.0
41"		70.0	70.0	65.0	65.0
47"		70.0	70.0	65.0	65.0
52-1/8"		70.0	70.0	65.0	65.0
18-1/8"	49-5/8" (6)	70.0	70.0	65.0	65.0
25-1/2"		70.0	70.0	65.0	65.0
31"		70.0	70.0	65.0	65.0
36"		70.0	70.0	65.0	65.0
41"		70.0	70.0	65.0	65.0
47"		70.0	70.0	65.0	65.0
52-1/8"		70.0	70.0	65.0	65.0
18-1/8"	62" (6)	70.0	70.0	65.0	65.0
25-1/2"		70.0	70.0	65.0	65.0
31"		70.0	70.0	65.0	65.0
36"		70.0	70.0	65.0	65.0
41"		70.0	70.0	65.0	65.0
47"		70.0	70.0	65.0	65.0
52-1/8"		70.0	70.0	65.0	65.0
18-1/8"	75-3/4" (8)	70.0	70.0	65.0	65.0
25-1/2"		70.0	70.0	65.0	65.0
31"		70.0	70.0	65.0	65.0
36"		70.0	70.0	65.0	65.0
41"		70.0	70.0	65.0	65.0
47"		70.0	70.0	65.0	65.0
52-1/8"		64.5	64.5	64.5	64.5

NO. IN PARENTHESIS INDICATE NUMBER OF ANCHORS PER JAMB.

UNEQUAL LITES WINDOWS

DESIGN LOAD CAPACITY - PSF

BUCK DIMS.		GLASS TYPES 'A' & 'A1'		GLASS TYPES 'B' & 'B1'	
WIDTH	HEIGHT	EXT.(+)	INT.(-)	EXT.(+)	INT.(-)
18-1/8"	49-5/8" (6)	70.0	70.0	65.0	65.0
25-1/2"		70.0	70.0	65.0	65.0
31"		70.0	70.0	65.0	65.0
36"		70.0	70.0	65.0	65.0
41"		70.0	70.0	65.0	65.0
47"		70.0	70.0	65.0	65.0
52-1/8"		70.0	70.0	65.0	65.0
18-1/8"	62" (6)	70.0	70.0	65.0	65.0
25-1/2"		70.0	70.0	65.0	65.0
31"		70.0	70.0	65.0	65.0
36"		70.0	70.0	65.0	65.0
41"		70.0	70.0	65.0	65.0
18-1/8"	75-1/4" (8)	70.0	70.0	65.0	65.0
25-1/2"		70.0	70.0	65.0	65.0
31"		70.0	70.0	65.0	65.0

NO. IN PARENTHESIS INDICATE NUMBER OF ANCHORS PER JAMB.

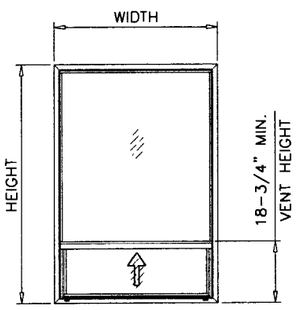

UNEQUAL LITES (ORIEL TYPE)

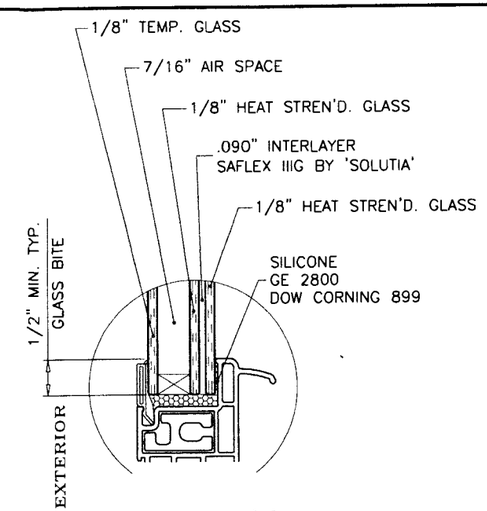

GLASS TYPE 'A'

7/8" OVERALL INSUL. LAM. GLASS (LARGE & SMALL MISSILE IMPACT GLASS)

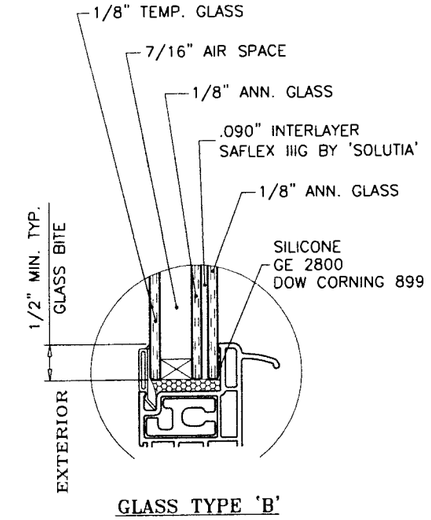

GLASS TYPE 'B'

7/8" OVERALL INSUL. LAM. GLASS (LARGE & SMALL MISSILE IMPACT GLASS)

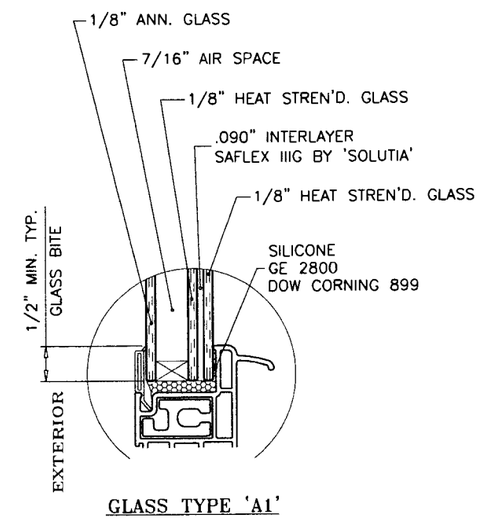

GLASS TYPE 'A1'

7/8" OVERALL INSUL. LAM. GLASS (LARGE MISSILE IMPACT GLASS)

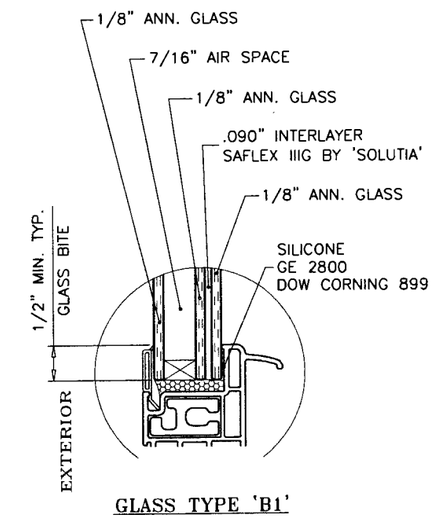

GLASS TYPE 'B1'

7/8" OVERALL INSUL. LAM. GLASS (LARGE MISSILE IMPACT GLASS)

GLAZING OPTIONS

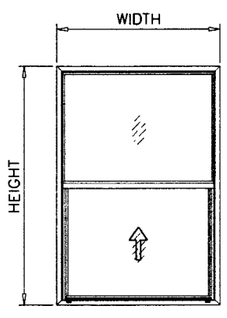

EQUAL LITES

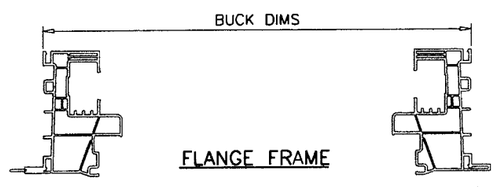

FLANGE FRAME

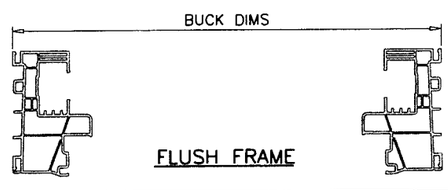

FLUSH FRAME

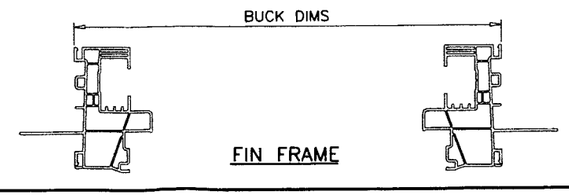

FIN FRAME

NOTE:
GLASS CAPACITIES ON THIS SHEET ARE BASED ON ASTM E1300-04 (3 SEC. GUSTS) AND FLORIDA BUILDING COMMISSION DECLARATORY STATEMENT DCA05-DEC-219

Engr: JAVAD AHMAD
CIVIL
FLA. PE # 70592
C.A.N. 3538
JUN 03 20

PRODUCT REVISE
as complying with the Florida Building Code
Acceptance No. 10-0804.10
Expiration Date APRIL 27, 2014
By Miami-Dade Product Control Division

AL-FAROOQ CORPORATION
ENGINEERS & PRODUCT DEVELOPMENT
1235 S.W. 87 AVE
MIAMI, FLORIDA 33174
TEL. (305) 264-8100 FAX. (305) 262-6978
COMP-ANL\W09-10AWP

SERIES 10000 PVC SINGLE HUNG TILT WDW. (L.M.I./S.M.I.)

ARCH WINDOWS, LLC dba AWP
8130 N.W. 74TH AVE.
MEDLEY, FL. 33166
TEL. (305) 887-2646 FAX (305) 883-1309

revisions:

no	date	by	description
A	09.30.09		GENERAL REVISION
B	05.27.10		MANUF. NAME REVISED

date: 02-12-09
scale: 1/2"=1'-0"
dr. by: HAMID
chk. by:

drawing no. W09-10

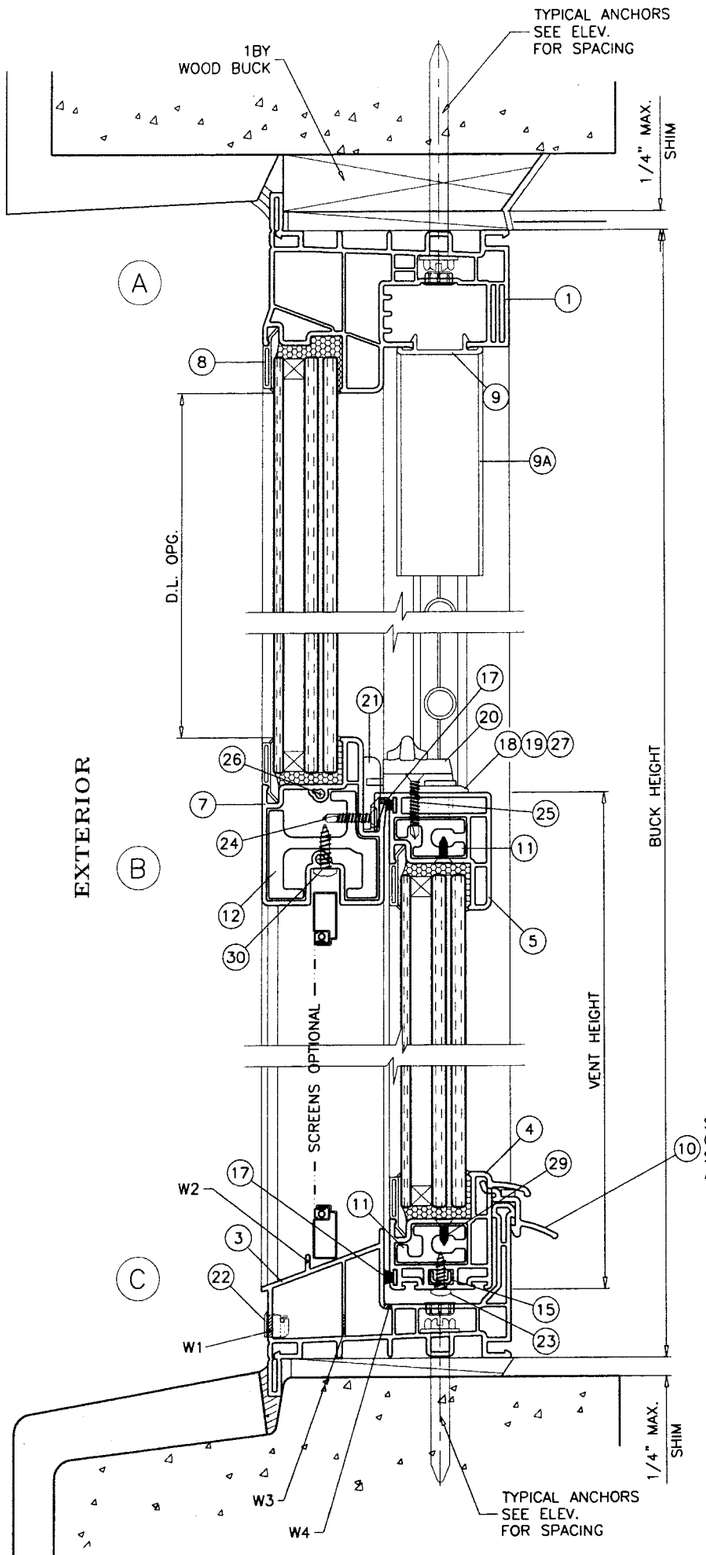

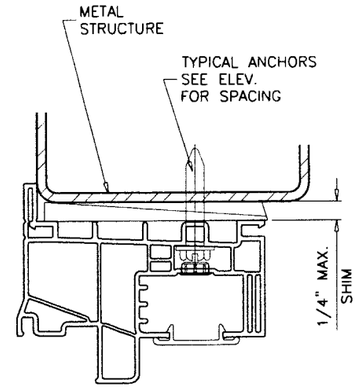

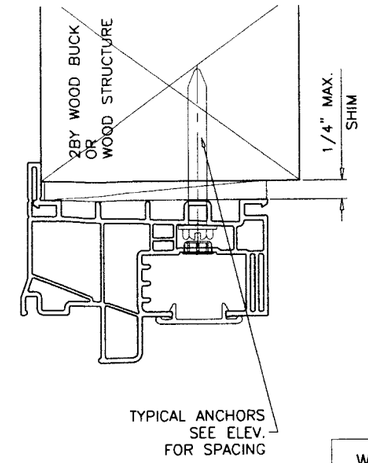

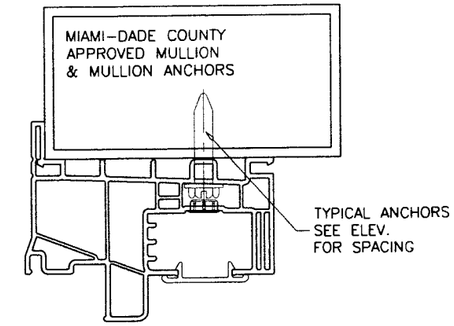

WOOD BUCKS AND METAL STRUCTURE NOT BY AWP WDW.
MUST SUSTAIN LOADS IMPOSED BY GLAZING SYSTEM
AND TRANSFER THEM TO THE BUILDING STRUCTURE.

SEALANTS:

FRAME, VENT CORNERS AND FIX. RAIL ENDS SEALED WITH WHITE/ALUMINUM COLORED SEALANT.

WEEPHOLES:

W1 = 1-9/16" X 5/16" WEEP HOLES AT 4-3/8" FROM EACH END WITH PLASTIC BAFFLE

W2 = 5/8" WEEP NOTCH AT EACH END

W3 = 3/8" X 1/4" WEEP HOLES AT EACH END

W4 = 1" X 1/8" WEEP HOLES AT 3-3/4" FROM EACH END

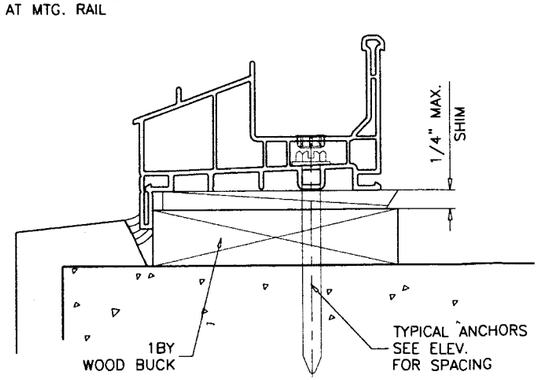

TYPICAL ANCHORS: SEE ELEV. FOR SPACING

1/4" DIA. TAPCON BY 'ITW' (Fu=120 KSI, Fy=92 KSI)
1/4" DIA. ULTRACON BY 'ELCO' (Fu=177 KSI, Fy=155 KSI)

INTO 2BY WOOD BUCKS OR WOOD STRUCTURES
1-3/8" MIN. PENETRATION INTO WOOD

THRU 1BY BUCKS INTO CONC. OR MASONRY
1-1/4" MIN. EMBED INTO CONC. OR MASONRY

DIRECTLY INTO CONC. OR MASONRY
1-1/4" MIN. EMBED INTO CONC. OR MASONRY

#12 SMS OR SELF DRILLING SCREWS (GRADE 2 CRS)
INTO METAL STRUCTURES

STEEL : 12 GA. MIN. (Fy = 36 KSI MIN.)
ALUMINUM : 1/8" THK. MIN. (6063-T5 MIN.)
(STEEL IN CONTACT WITH ALUMINUM TO BE PLATED OR PAINTED)

#12 SMS OR SELF DRILLING SCREWS (GRADE 2 CRS)

INTO MIAMI-DADE COUNTY APPROVED MULLIONS (MIN. THK. = .090")
(NO SHIM SPACE)

TYPICAL EDGE DISTANCE

INTO CONCRETE AND MASONRY = 1-1/2" MIN.
INTO WOOD STRUCTURE = 1" MIN.
INTO METAL STRUCTURE = 3/4" MIN.

CONCRETE AT HEAD, SILL OR JAMBS f'c = 3000 PSI MIN.
C-90 HOLLOW/FILLED BLOCK AT JAMBS f'm = 2000 PSI MIN.

Engr: JAVAD AHMAD
CIVIL
FLA. PE # 70592
C.A.N. 3538

JUN 08 2010

PRODUCT REVISE
In complying with the Florida
Building Code
Acceptance No. 10-0804.10
Expiration Date APRIL 22, 2014
By Manuel Perez
Miami Dade Product Control
Division

AL-FAROOQ CORPORATION
ENGINEERS & PRODUCT DEVELOPMENT
1235 S.W. 87 AVE
MIAMI, FLORIDA 33174
TEL. (305) 264-8100 FAX. (305) 262-6978
COMP-ANL\W09-10AWP

SERIES 10000 PVC SINGLE HUNG TILT WDW. (L.M.I./S.M.I.)

ARCH WINDOWS, LLC dba AWP
8130 N.W. 74TH AVE.
MEDLEY, FL. 33166
TEL. (305) 887-2646 FAX (305) 883-1309

revisions:

no	date	by	description
A	09.30.09		GENERAL REVISION
B	05.27.10		MANUF. NAME REVISED

date: 02-12-09
scale: 1/2" = 1"
dr. by: HAMID
chk. by:

drawing no.
W09-10

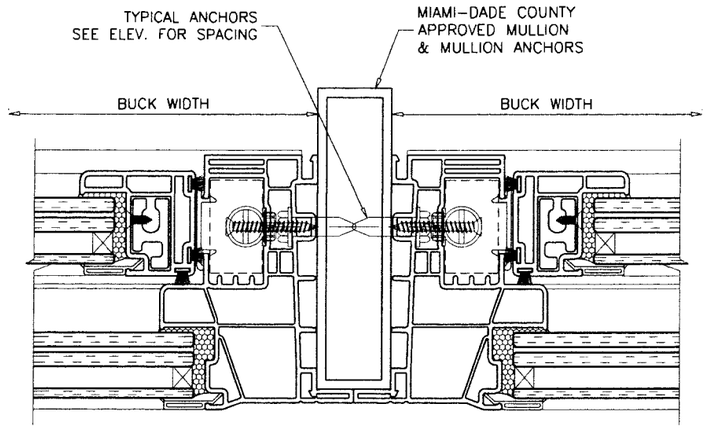

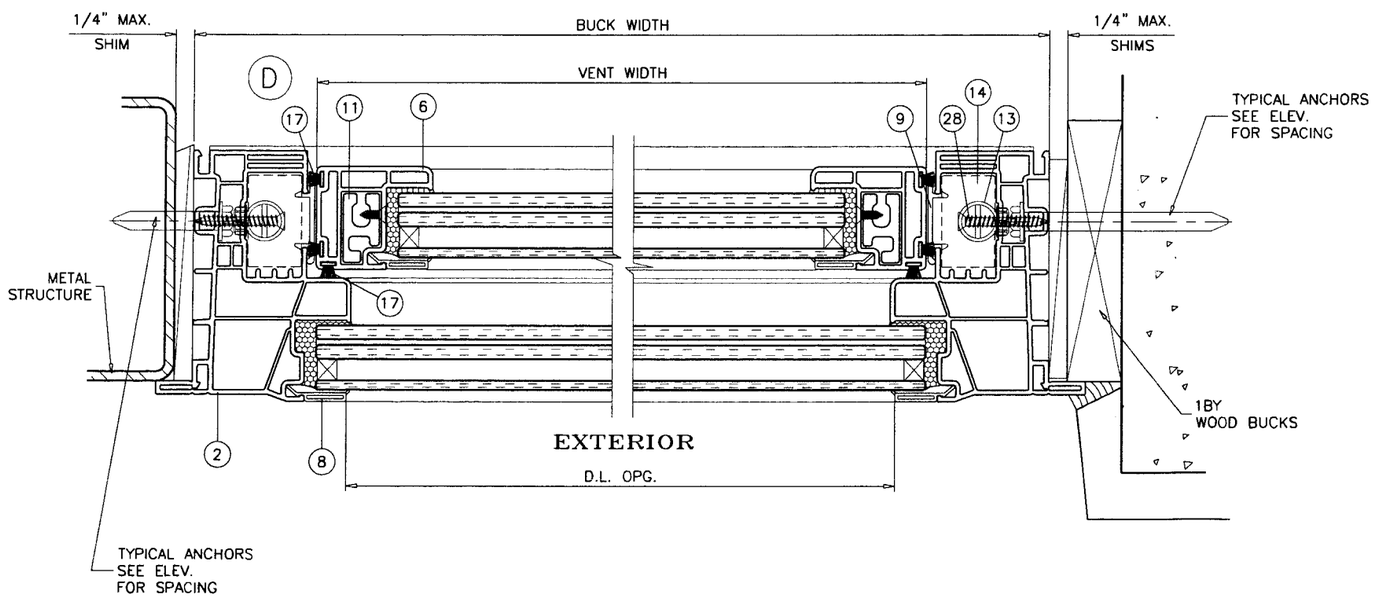

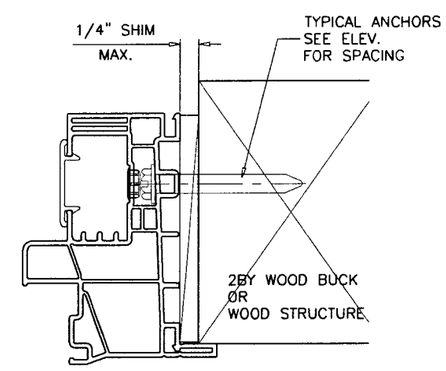

Engr: JAVAD AHMAD
CIVIL
FLA. PE # 70592
C.A.N. 3538

JUN 03 2010

PRODUCT REVISE.
as complying with the Florida
Building Code
Acceptance No. 10-0804.10
Expiration Date APRIL 22, 2014
By: Manuel Perez
Dade Product Control
Division

AL-FAROOQ CORPORATION
ENGINEERS & PRODUCT DEVELOPMENT
1235 S.W. 87 AVE
MIAMI, FLORIDA 33174
TEL. (305) 264-8100 FAX. (305) 262-6978

COMP-ANL\W09-10AWP

SERIES 10000 PVC SINGLE HUNG TILT WDW. (L.M.I./S.M.I.)

ARCH WINDOWS, LLC dba AWP
8130 N.W. 74TH AVE.
MEDLEY, FL. 33166
TEL. (305) 887-2646 FAX (305) 883-1309

revisions:

no	date	by	description
A	09.30.09		GENERAL REVISION
B	05.27.10		MANUF. NAME REVISED

date: 02-12-09
scale: 1/2" = 1"
dr. by: HAMID
chk. by:

drawing no.
W09-10

sheet 4 of 8

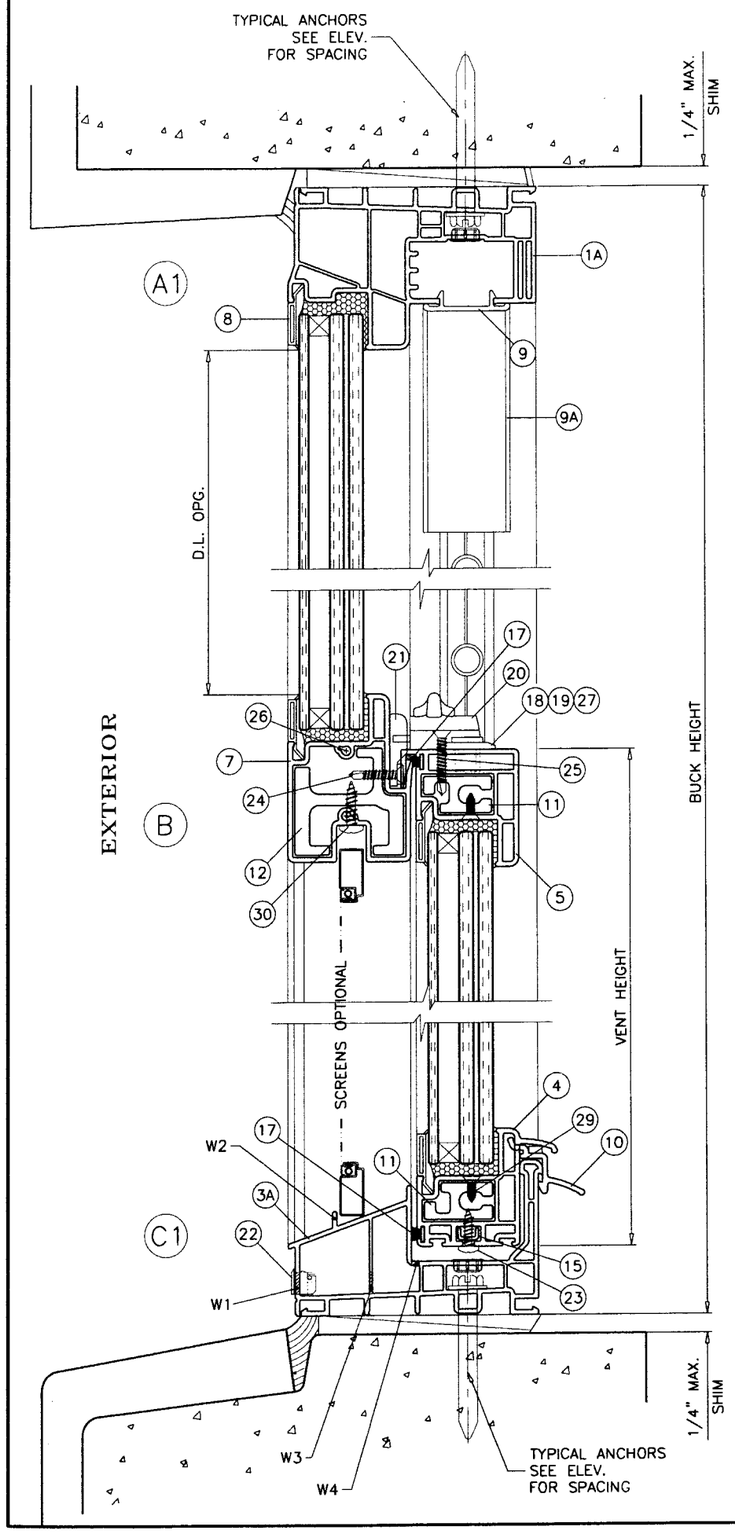

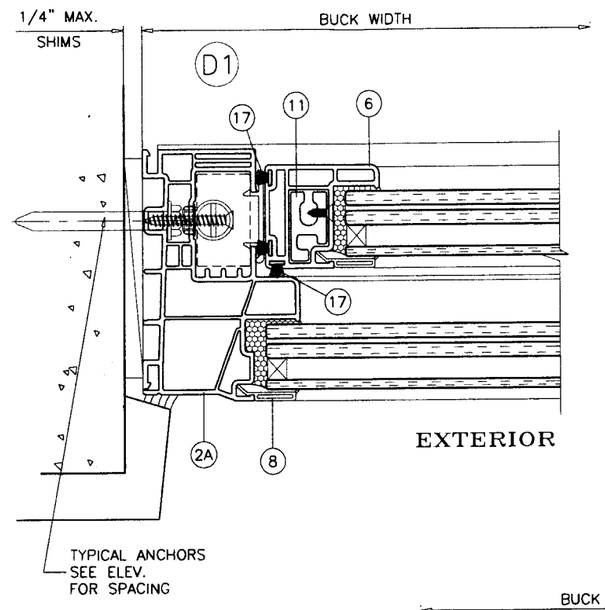

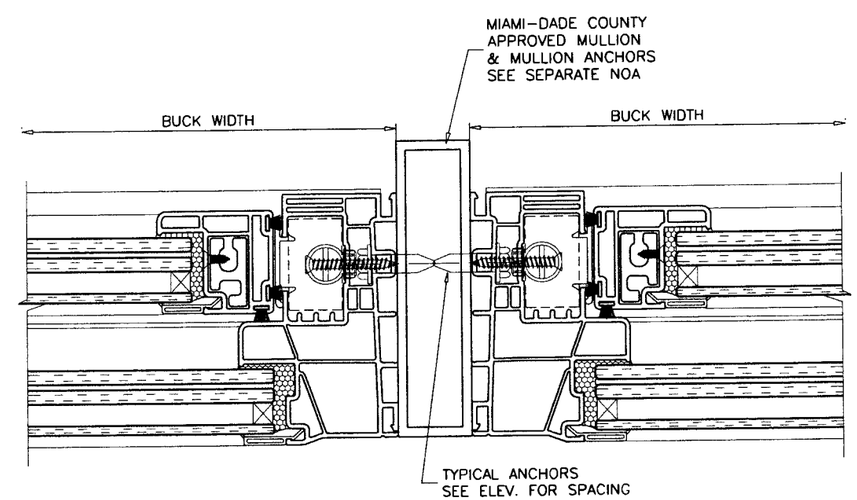

Engr: JAVAD AHMAD
CIVIL
FLA. PE # 70592
C.A.N. 3538

JUN 0 9 2010

PRODUCT REVISE.
as complying with the Florida
Building Code
Acceptance No. 10-0804.10
Registration Date APRIL 22, 2014
By Miami-Dade Product Control
Review

AL-FAROOQ CORPORATION
ENGINEERS & PRODUCT DEVELOPMENT
1235 S.W. 87 AVE
MIAMI, FLORIDA 33174
TEL. (305) 264-8100 FAX. (305) 262-6978
COMP-ANL\W09-10AWP

SERIES 10000 PVC SINGLE HUNG TILT WDW. (L.M.I./S.M.I.)

ARCH WINDOWS, LLC dba AWP
8130 N.W. 74TH AVE.
MEDLEY, FL. 33166
TEL. (305) 887-2646 FAX (305) 883-1309

revisions:

no	date	by	description
A	09.30.09		GENERAL REVISION
B	05.27.10		MANUF. NAME REVISED

date: 02-12-09
scale: 1/2" = 1"
dr. by: HAMID
chk. by:

drawing no.
W09-10

sheet 5 of 8

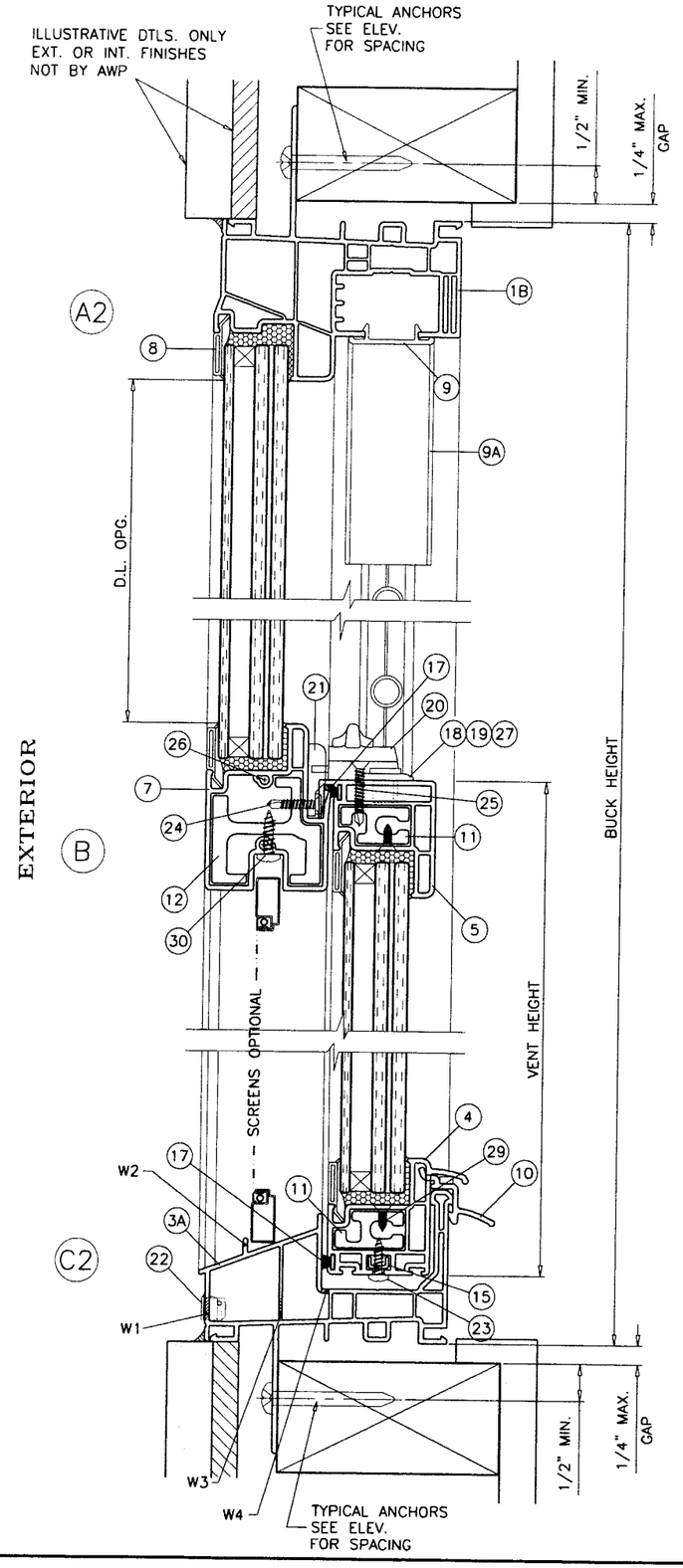

TYPICAL ANCHORS: SEE ELEV. FOR SPACING

#12 SMS (GRADE 2 CRS)

INTO 2BY WOOD BUCKS OR WOOD STRUCTURES
1-3/8" MIN. PENETRATION INTO WOOD

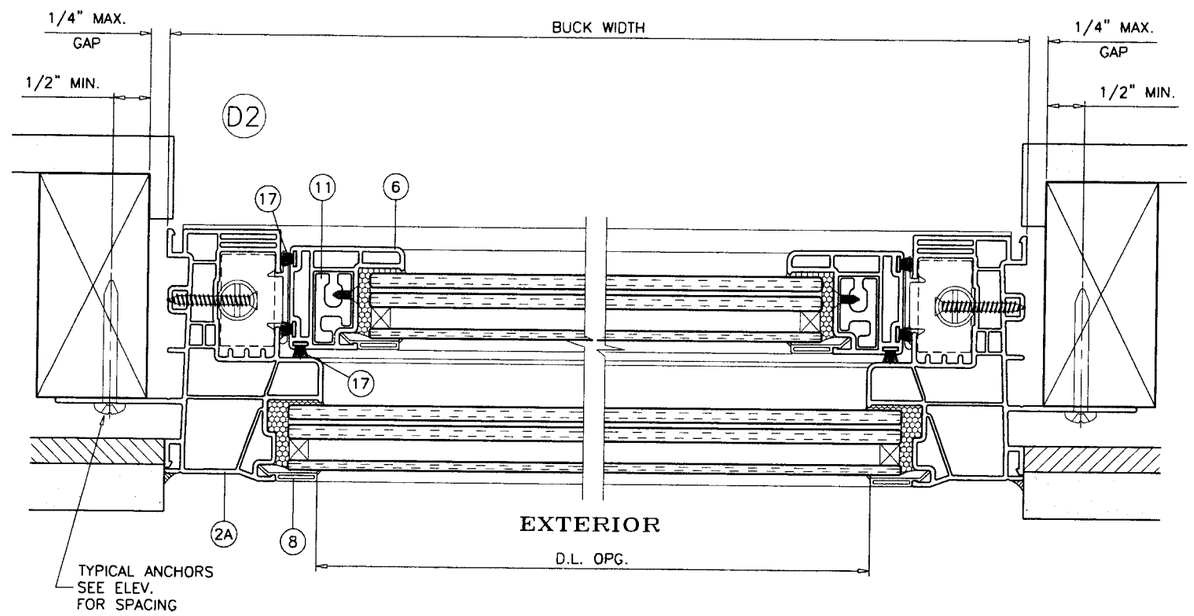

Engr: JAVAD AHMAD
CIVIL
FLA. PE # 70592
C.A.N. 3538

JUN 0 2

PRODUCT REVISE.
as complying with the Florida
Building Code
Compliance No. 10-0804.10
Expiration Date APRIL 22, 2014
Miami-Dade Product Control
Division

AL-FAROOQ CORPORATION
ENGINEERS & PRODUCT DEVELOPMENT
1235 S.W. 87 AVE
MIAMI, FLORIDA 33174
TEL. (305) 264-8100 FAX. (305) 262-6978

COMP-ANL\W09-10AWP

SERIES 10000 PVC SINGLE HUNG TILT WDW. (L.M.I./S.M.I.)

ARCH WINDOWS, LLC dba AWP
8130 N.W. 74TH AVE.
MEDLEY, FL. 33166
TEL. (305) 887-2646 FAX (305) 883-1309

revisions:

no	date	by	description
A	09.30.09		GENERAL REVISION
B	05.27.10		MANUF. NAME REVISED

date: 02-12-09
scale: 1/2" = 1"
dr. by: HAMID
chk. by:

drawing no.
W09-10

sheet 6 of 8

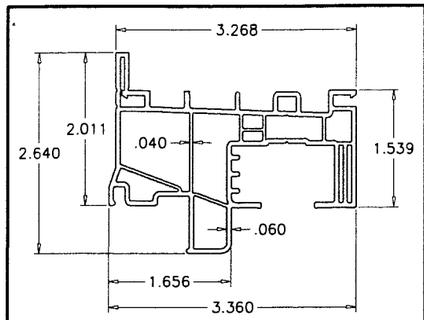

1 2 FLANGE FRAME HEAD/JAMB

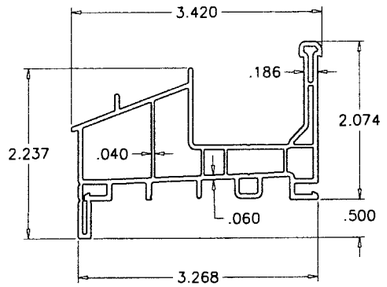

3 FLANGE FRAME SILL

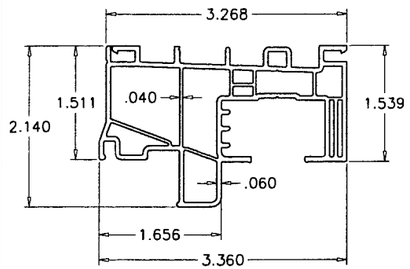

1A 2A FLUSH FRAME HEAD/JAMB

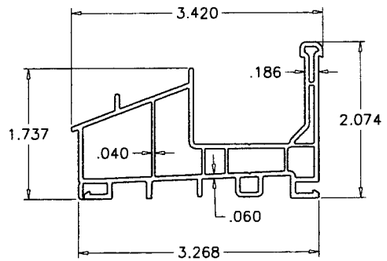

3A FLUSH FRAME SILL

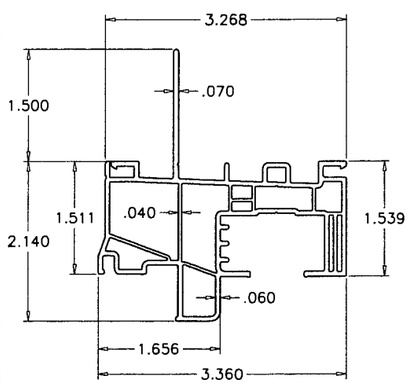

1B 2B FIN FRAME HEAD/JAMB

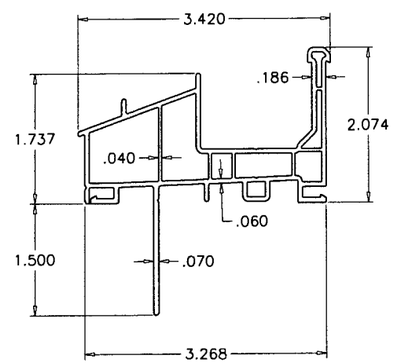

3B FIN FRAME SILL

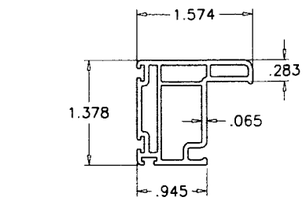

6 VENT SIDE RAIL

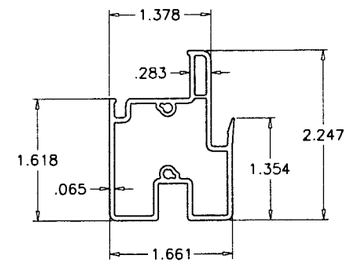

7 FIX. MEETING RAIL

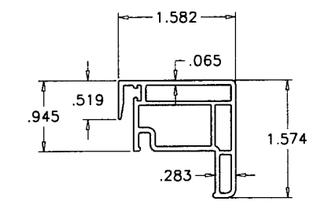

5 VENT TOP RAIL

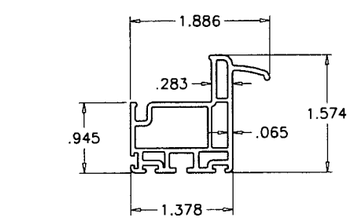

4 VENT BOTTOM RAIL

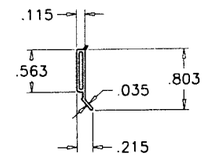

8 GLAZING BEAD

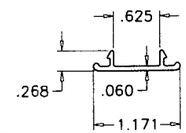

9 9A HEAD/JAMB COVER/VENT STOP

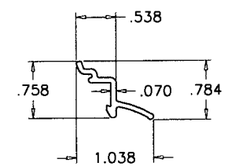

10 LATCH LOCK

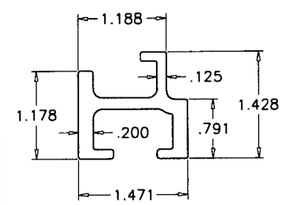

12 FIX. MTG. RAIL STIFFENER

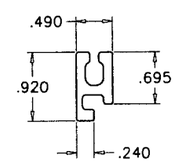

11 VENT STIFFENER

Engr: JAVAD AHMAD
CIVIL
FLA. PE # 70592
C.A.N. 3538
JUN 0 3 2010

PRODUCT REVISE.
as complying with the Florida
Building Code
Acceptance No. 10-0804.10
Expiration Date APRIL 22, 2014
By Manuel Perez
Miami Dade Product Control
Division

AL-FAROOQ CORPORATION
ENGINEERS & PRODUCT DEVELOPMENT
1235 S.W. 87 AVE
MIAMI, FLORIDA 33174
TEL. (305) 264-8100 FAX. (305) 262-6978
COMP-ANL\W09-10AWP

SERIES 10000 PVC SINGLE HUNG TILT WDW. (L.M.I./S.M.I.)

ARCH WINDOWS, LLC dba AWP
8130 N.W. 74TH AVE.
MEDLEY, FL. 33166
TEL. (305) 887-2646 FAX (305) 883-1309

revisions:

no	date	by	description
A	09.30.09		GENERAL REVISION
B	05.27.10		MANUF. NAME REVISED

date: 02-12-09
scale: 1/2" = 1"
dr. by: HAMID
chk. by:

drawing no.
W09-10

sheet 7 of 8

ITEM	PART #	QUANTITY	DESCRIPTION	MATERIAL	MANF./SUPPLIER/REMARKS
1	YV-10001	1	FLANGE FRAME HEAD	PVC	–
1A	YV-10001	1	FLUSH FRAME HEAD	PVC	–
1B	YV-10001	1	FIN FRAME HEAD	PVC	–
2	YV-10001	2	FLANGE FRAME JAMB	PVC	–
2A	YV-10001	2	FLUSH FRAME JAMB	PVC	–
2B	YV-10001	2	FIN FRAME JAMB	PVC	–
3	YV-10002	1	FLANGE FRAME SILL	PVC	–
3A	YV-10002	1	FLUSH FRAME SILL	PVC	–
3B	YV-10002	1	FIN FRAME SILL	PVC	–
4	YV-10003	1	VENT BOTTOM RAIL	PVC	–
5	YV-10004	1	VENT INTERLOCK STILE	PVC	–
6	YV-10005	2	VENT SIDE STILE	PVC	–
7	YV-10006	1	FIXED INTERLOCK	PVC	–
8	YV-10007	8	GLAZING BEAD	PVC	–
9	YV-10008	3	HEAD/JAMB COVER	PVC	–
9A	YV-10008	2	VENT STOP (3" LONG)	PVC	–
10	YV-10009	1	VENT BOTTOM LATCH LOCK AT MIDSPAN OF BOT. RAIL	PVC	–
11	YE-1104	4/VENT	VENT REINFORCEMENT	6063-T6	–
12	YE-1103	1/EACH	FIXED INTERLOCK REINFORCEMENT	6063-T6	–
13	–	2/VENT	"ULTRA-LIFT" BALANCE	–	"CALDWELL"
14	YH-5010	2/VENT	BALANCE CARRIER ASSY. (MOD. 16H101)	–	"CALDWELL"
15	YH-524SS	2/VENT	PIVOT BAR (MOD. 0614523-SS) AT EACH END OF BOT. RAIL	S. STEEL	ADEPT
16	YH-1316	AS REQ'D.	ø 3/8" HOLE PLUG (MOD. C-13856)	NYLON	ASHLAND
17	YH-4026	AS REQ'D.	.187" x .270" FIN SEAL PILE WITH PLASTIC FIN W'STRIP	–	"ULTRAFAB"
18	YH-590RH	1/VENT	TILT LATCH (MOD. 46.13.32.101 RIGHT) AT END OF TOP RAIL	–	"TRUTH"
19	YH-590LH	1/VENT	TILT LATCH (MOD. 46.13.32.102 LEFT) AT END OF TOP RAIL	–	"TRUTH"
20	YH-595	2/VENT	SWEEP LOCK (MOD. 677208) AT 6" FROM EACH END	–	"DECO"
21	YH-597	2/VENT	FACE MOUNT KEEPER (MOD. 677133) AT LOCK LOCATIONS	–	"DECO"
22	YH-1610	2	WEEP HOLE COVER	–	"ASHLAND"
23	YF-81	2/BAR	#6 x 1/2" P.H. PH.DR. PIVOT BAR SCREW	CAD PLATED CRS.	–
24	YF-82	2/KEEPER	#6 x 3/4" F.H. TEK. SQ.DR. KEEPER SCREW	CAD PLATED CRS.	–
25	YF-83	2/LOCK	#8 x 7/8" F.H. TEK. PH.DR. SWEEP LOCK SCREW	CAD PLATED CRS.	–
26	YF-78SH	4	#8 x 2-1/2" P.H. SS. SQ.DR. FIXED MTG. RAIL SCREW	S. STEEL	(2) AT EACH END
27	YF-85	1/LATCH	#6 x 1/2" F.H. SS. SQ.DR. TILT LATCH SCREW	S. STEEL	–
28	YF-90	1/BAL.	#8 x 1-1/4" F.H. SS. PH.DR. BALANCE SCREW	S. STEEL	–
29	YF-92	14/VENT	#8 x 3/8" F.H. PH.DR. VENT REINFORCING SCREW	CAD PLATED CRS.	–
30	YF-21SS	5/VENT	#8 x 1/2" P.H. SS. PH.DR. FIXED MR. REINF. SCREW	S. STEEL	AT 4" FROM ENDS & 10-1/4" O.C.

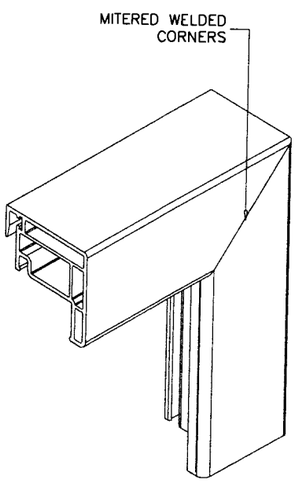

VENT CORNERS

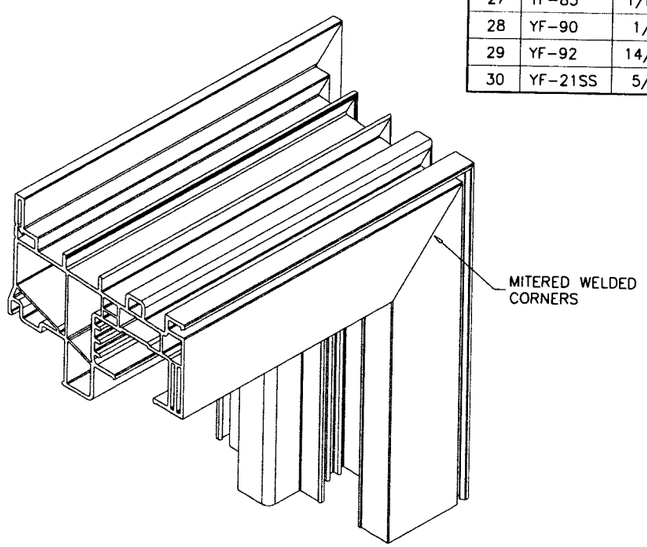

FRAME CORNERS

Engr: JAVAD AHMAD
CIVIL
FLA. PE # 70592
C.A.N. 3538

JUN 03 2010

PRODUCT REVISE.
in complying with the Florida
Building Code
Acceptance No. 10-0804.10
Expiration Date: APRIL 22, 2014
By Manuel Perez
Miami-Dade Product Control
Division

AL-FAROOQ CORPORATION
ENGINEERS & PRODUCT DEVELOPMENT
1235 S.W. 87 AVE
MIAMI, FLORIDA 33174
TEL. (305) 264-8100 FAX. (305) 262-6978

COMP-ANL\W09-10AWP

SERIES 10000 PVC SINGLE HUNG TILT WDW. (L.M.I./S.M.I.)

ARCH WINDOWS, LLC dba AWP
8130 N.W. 74TH AVE.
MEDLEY, FL. 33166
TEL. (305) 887-2646 FAX (305) 883-1309

revisions:

no	date	by	description
A	09.30.09		GENERAL REVISION
B	05.27.10		MANUF. NAME REVISED

date: 02-12-09
scale: 1/2" = 1"
dr. by: HAMID
chk. by:

drawing no.
W09-10

sheet 8 of 8