MIAMI-DADE COUNTY
BUILDING CODE COMPLIANCE OFFICE (BCCO)
PRODUCT CONTROL DIVISION

**MIAMI-DADE** COUNTY, FLORIDA
METRO-DADE FLAGLER BUILDING
**140 WEST FLAGLER STREET, SUITE 1603**
MIAMI, FLORIDA 33130-1563
(305) 375-2901 FAX (305) 372-6339
www.miamidade.gov/buildingcode

# NOTICE OF ACCEPTANCE (NOA)

**Mulia, Inc.**
**3414 South Garfield Avenue**
**Commerce, CA 90040**

**SCOPE:**

This NOA is being issued under the applicable rules and regulations governing the use of construction materials. The documentation submitted has been reviewed by Miami-Dade County Product Control Division and accepted by the Board of Rules and Appeals (BORA) to be used in Miami Dade County and other areas where allowed by the Authority Having Jurisdiction (AHJ).

This NOA shall not be valid after the expiration date stated below. The Miami-Dade County Product Control Division (In Miami Dade County) and/or the AHJ (in areas other than Miami Dade County) reserve the right to have this product or material tested for quality assurance purposes. If this product or material fails to perform in the accepted manner, the manufacturer will incur the expense of such testing and the AHJ may immediately revoke, modify, or suspend the use of such product or material within their jurisdiction. BORA reserves the right to revoke this acceptance, if it is determined by Miami-Dade County Product Control Division that this product or material fails to meet the requirements of the applicable building code.

This product is approved as described herein, and has been designed to comply with the Florida Building Code, including the High Velocity Hurricane Zone.

**DESCRIPTION: Glass Block**

**APPROVAL DOCUMENT:** Drawing No. **04-03**, titled "Glass Block Panel Details" sheets 1 and 2 of 2, dated 01/23/04, with revision C dated 08/05/10, prepared by Al-Farooq Corporation, signed and sealed by Javad Ahmad, P.E., bearing the Miami-Dade County Product Control revision stamp with the Notice of Acceptance number and expiration date by the Miami-Dade County Product Control Division.

**MISSILE IMPACT RATING: None**

**LABELING:** Each glass block shall be permanently labeled with the manufacturer's name (MULIA) and (M) standing for Miami-Dade County.

**RENEWAL** of this NOA shall be considered after a renewal application has been filed and there has been no change in the applicable building code negatively affecting the performance of this product.

**TERMINATION** of this NOA will occur after the expiration date or if there has been a revision or change in the materials, use, and/or manufacture of the product or process. Misuse of this NOA as an endorsement of any product, for sales, advertising or any other purposes shall automatically terminate this NOA. Failure to comply with any section of this NOA shall be cause for termination and removal of NOA.

**ADVERTISEMENT:** The NOA number preceded by the words Miami-Dade County, Florida, and followed by the expiration date may be displayed in advertising literature. If any portion of the NOA is displayed, then it shall be done in its entirety.

**INSPECTION:** A copy of this entire NOA shall be provided to the user by the manufacturer or its distributors and shall be available for inspection at the job site at the request of the Building Official.

This NOA **revises** and **renews NOA # 07-0417.02** and consists of this page 1 and evidence page E-1, as well as approval document mentioned above.

The submitted documentation was reviewed by **Carlos M. Utrera, P.E.**

MIAMI-DADE COUNTY APPROVED

11/05/10

**NOA No. 10-0819.03**
**Expiration Date: October 23, 2015**
**Approval Date: November 18, 2010**

## NOTICE OF ACCEPTANCE: EVIDENCE SUBMITTED

### A. DRAWINGS

1. Drawing **04-03**, titled "Glass Block Panel Details" sheets 1 and 2 of 2, dated 01/23/04, with revision C dated 08/05/10, prepared by Al-Farooq Corporation, signed and sealed by Javad Ahmad, P.E.

### B. TESTS *"Submitted under NOA # 07-0417.02"*

1. Test Report on Uniform Static Air Pressure Test per TAS 202 of "Hollow Glass Block Wall/Window", prepared by Hurricane Engineering & Testing Inc. Report #HETI 05-1452, dated 05/16/05 signed and sealed by Ivonne Ghia, P.E.
2. Test Report on Uniform Static Air Pressure Test per TAS 202 of Hollow Glass Block Wall/Window, prepared by Hurricane Engineering & Testing Inc. Report # HETI 03-1790, dated 02/28/03 signed and sealed by R. Droz-Seda, P.E.

### C. CALCULATIONS

1. Anchor calculations prepared by Al-Farooq Corporation, dated 08/05/10, signed and sealed by Javad Ahmad, P.E.

### D. QUALITY ASSURANCE

1. Miami Dade Building Code Compliance Office (BCCO

### E. MATERIAL CERTIFICATIONS

1. None.

### F. STATEMENTS

1. Statement letters of Code compliance to FBC 2007 and no financial Interest, issued by Al-Farooq Corporation, dated 08/05/10, signed and sealed by Javad Ahmad, P.E.
2. Distributor agreement dated 10/10/10.

11/05/10

**Carlos M. Utrera, P.E.**
**Product Control Examiner**
**NOA No. 10-0819.03**
**Expiration Date: October 23, 2015**
**Approval Date: November 18, 2010**

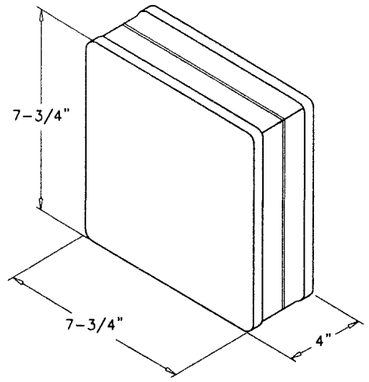


## GLASS BLOCK

PARTIALLY EVACUATED HOLLOW UNITS
FORMED AND PERMANENTLY SEALED BY HEAT FUSING
TWO HALVES OF PRESSED GLASS TOGETHER
MANF. BY 'MULIAGLASS'
WALL THICKNESS VARIES DEPENDING ON GLASS PATTERN
MIN. THK. = .394 IN.

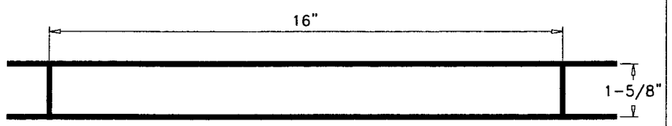


## HORIZONTAL LADDER REINFORCING

1-5/8" W X 10' L
9 GAUGE GALVANIZED STEEL SIDE RODS &
CROSS RODS, CROSS RODS @ 16" O.C.

## WALL TIES/ANCHOR STRAP

20 GA. GALVANIZED STEEL
12" LONG, 1-3/4" WIDE

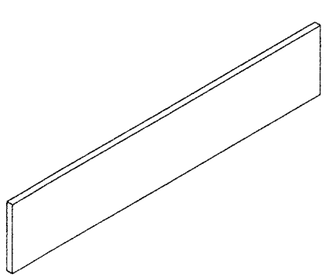

## EXPANSION STRIP

POLYETHYLENE PLASTIC
1/4" THICK, 24" LONG, 3-1/2" WIDE

| MAXIMUM DESIGN LOAD RATING = | + 90.0 PSF |
|---|---|
| (FOR SIZE SHOWN ON SHEET 2 OR SMALLER) | − 90.0 PSF |

## GLASS BLOCK PANELS

GLASS BLOCK PANELS NOT RATED FOR IMPACT.

INSTALLATION OF THIS PRODUCT IN THE HVHZ AREA REQUIRES THE USE OF APPROVED SHUTTERS OR EXTERNAL PROTECTION DEVICES COMPLYING WITH HVHZ REQUIREMENTS.

INSTALLATION OF THIS SYSTEM OUTSIDE THE HVHZ AREA SHALL MEET THE APPLICABLE REQUIREMENTS FOR WIND BORNE DEBRIS PROTECTION.

---

THIS PRODUCT HAS BEEN DESIGNED AND TESTED TO COMPLY WITH THE REQUIREMENTS OF THE FLORIDA BUILDING CODE 2007 EDITION INCLUDING HIGH VELOCITY HURRICANE ZONE (HVHZ).

ANCHORS SHALL BE AS LISTED, SPACED AS SHOWN ON DETAILS, ANCHORS EMBEDMENT TO BASE MATERIAL SHALL BE BEYOND WALL DRESSING OR STUCCO.

ANCHORING OR LOADING CONDITIONS NOT SHOWN IN THESE DETAILS ARE NOT PART OF THIS APPROVAL.

A LOAD DURATION INCREASE IS USED IN DESIGN OF ANCHORS INTO WOOD ONLY.

---

THE STRUCTURE AROUND GLASS MASONRY PANEL SHALL BE DESIGNED TO SUSTAIN LOADS IMPOSED BY THE GLASS BLOCKS.

GLASS BLOCK STRUCTURES ARE NON-LOAD BEARING. ADEQUATE PROVISION MUST BE MADE FOR SUPPORT OF CONSTRUCTION ABOVE GLASS BLOCK PANELS.

PROVISION FOR EXPANSION AND MOVEMENT MUST BE MADE AT JAMBS AND HEADS OF ALL PANELS. MORTAR MUST NOT BRIDGE EXPANSION SPACES. EXPANSION STRIPS SHALL BE POLYETHYLENE AS SHOWN HEREWITH.

PANEL REINFORCING SHALL BE OF GALVANIZED STEEL DOUBLE-WIRE FORMED OF TWO PARALLEL 9-GAUGE WIRES 1-5/8" O.C. WITH ELECTRICALLY WELDED CROSS WIRES AT REGULAR INTERVALS.

PANEL ANCHOR/WALL TIES SHALL BE 20-GAUGE PERFORATED STEEL STRIPS 12" LONG BY 1-3/4" WIDE GALVANIZED AFTER PERFORATING.

GLASS BLOCK SHALL BE LAID IN ONLY TYPE 'M' OR 'S' MORTAR OR EQUIVALENT APPROVED MATERIAL. BOTH VERTICAL AND HORIZONTAL MORTAR JOINTS SHALL BE AT LEAST ONE-EIGHTH AND NOT MORE THAN THREE-EIGHTHS INCH THICK AND SHALL BE COMPLETELY FILLED.

Engr: JAVAD AHMAD
CIVIL
FLA. PE # 70592
C.A.N. 3538
OCT 07 2010

**PRODUCT REVISED**
**as complying with the Florida Building Code**
**Acceptance No** 10-0819.03
**Expiration Date** 10/23/2015
**By**
**Miami Dade Product Control Division**


**AL-FAROOQ CORPORATION**
ENGINEERS & PRODUCT DEVELOPMENT
1235 S.W. 87 AVE
MIAMI, FLORIDA 33174
TEL. (305) 264-8100 FAX. (305) 262-6978


BLOCKS\04-03MI

GLASS BLOCK PANEL DETAILS


**MULIA INC.**
3414 SOUTH GARFIELD AVE.
COMMERCE, CA. 90040
TEL. (888) 888-9099 FAX (562) 345-2700


revisions:

| no | date | by | description |
|---|---|---|---|
| A | 08.27.04 | | REV. PER BCCO COMMENTS |
| B | 07.20.05 | | REV. PER BCCO COMMENTS |
| C | 08.05.10 | | UPDATED FOR 2007 FBC |

date: 01-23-04
scale: NONE
dr. by: HAMID
chk. by:

drawing no.
04-03

sheet 1 of 2

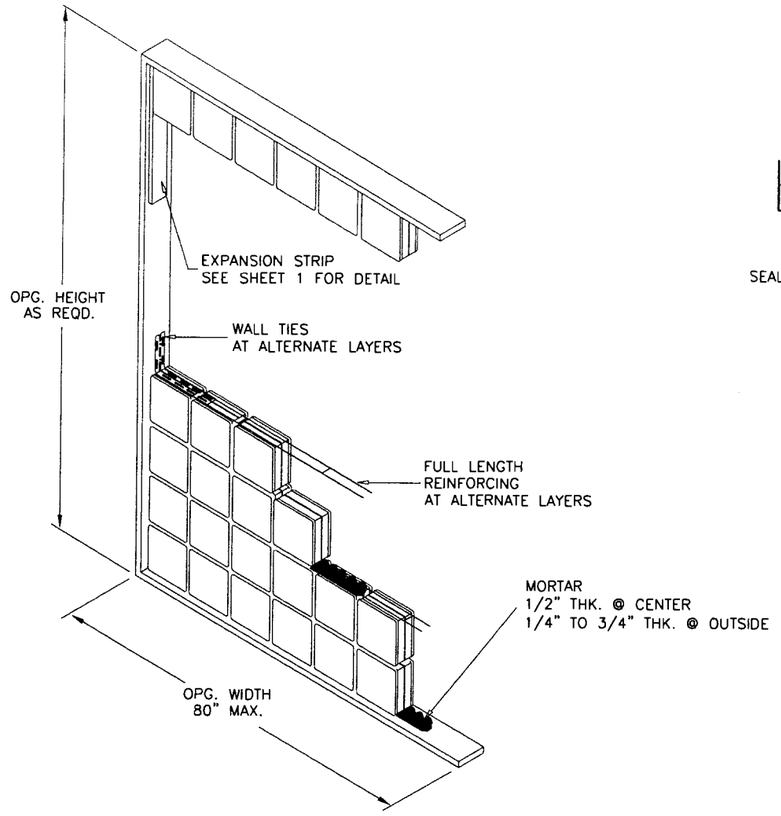


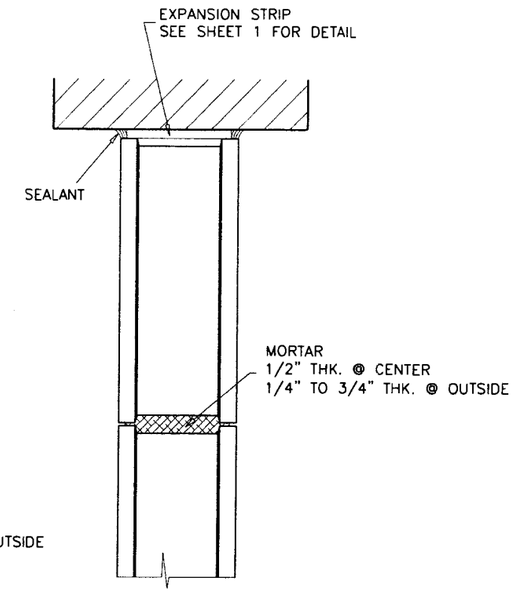


HEAD DETAIL

| ANCHOR TYPE | CONNECTION CAPACITY - PSF | | | | | |
|---|---|---|---|---|---|---|
| | ONE ANCHOR PER STRAP | | | TWO ANCHORS PER STRAP | | |
| | CONC | BLK. | WOOD | CONC | BLK. | WOOD |
| A | 90.0 | 84.0 | – | 90.0 | 90.0 | – |
| B | 77.0 | 20.0 | – | 90.0 | 41.0 | – |
| C | – | – | 51.0 | – | – | 90.0 |

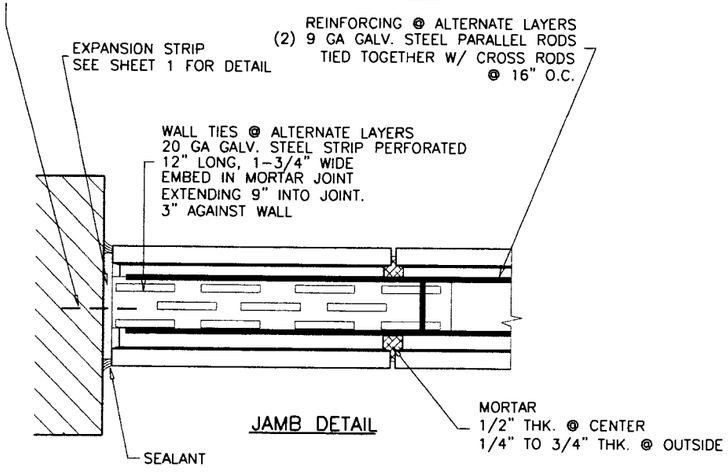


JAMB DETAIL

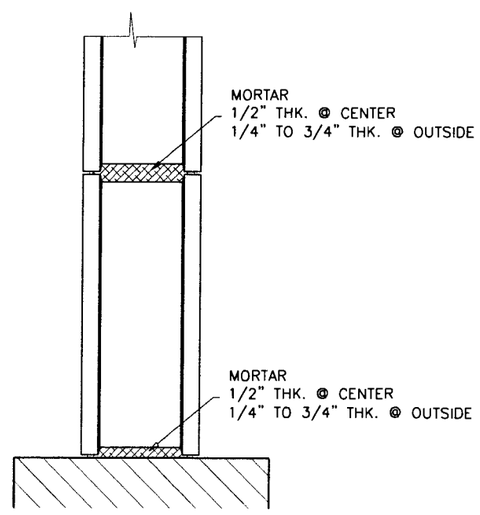


SILL DETAIL

## TYPICAL ANCHORS:

ANCHOR (A) = 1/4" DIA. ULTRACON BY 'ELCO' (Fu=177 KSI, Fy=155 KSI)
1-3/4" EMBEDMENT INTO CONCRETE
1-1/4" EMBEDMENT INTO MASONRY BLOCK

ANCHOR (B) = #1512SD DRIVE PINS WITH 7/8" WASHER BY 'RAMSET'
1-1/2" EMBEDMENT INTO CONCRETE
X-DNI DRIVE PINS WITH 7/8" WASHER BY 'HILTI'
1-1/2" EMBEDMENT INTO CONCRETE
1-1/4" EMBEDMENT INTO MASONRY BLOCK

ANCHOR (C) = #14 SMS (GRADE 2 CRS)
1-1/2" MIN PENETRATION INTO WOOD(S.G.=0.55)

TYPICAL EDGE DISTANCE
INTO CONCRETE AND MASONRY = 3" MIN.
INTO WOOD STRUCTURE = 1" MIN.

TYPICAL C/C SPACING
INTO CONCRETE AND MASONRY = 3" MIN.
INTO WOOD STRUCTURE = 1" MIN.

CONCRETE AT HEAD, SILL OR JAMBS f'c = 3000 PSI MIN.
C-90 HOLLOW/FILLED BLOCK AT JAMBS f'm = 2000 PSI MIN.

NOTE:
1. ANCHORS EMBEDMENT SHOWN IS BEYOND WALL & FLOOR COVERINGS (STUCCO, TILES, ETC.
2. ALL ANCHORS ARE REQUIRED TO HAVE 7/8" MIN. STEEL WASHER.

Engr: JAVAD AHMAD
CIVIL
FLA. PE # 70592
C.A.N. 3538
OCT 07 2010

PRODUCT REVISED
as complying with the Florida Building Code
Acceptance No 10-0819.03
Expiration Date 10/23/2015
By
Miami/Dade Product Control Division

AL-FAROOQ CORPORATION
ENGINEERS & PRODUCT DEVELOPMENT
1235 S.W. 87 AVE
MIAMI, FLORIDA 33174
TEL. (305) 264-8100 FAX. (305) 262-6978

BLOCKS\04-03MI

GLASS BLOCK PANEL DETAILS

MULIA INC.
3414 SOUTH GARFIELD AVE.
COMMERCE, CA. 90040
TEL. (888) 888-9099 FAX (562) 345-2700

revisions:

| no | date | by | description |
|---|---|---|---|
| A | 08.27.04 | | REV. PER BCCO COMMENTS |
| B | 07.20.05 | | REV. PER BCCO COMMENTS |
| C | 08.05.10 | | UPDATED FOR 2007 FBC |

date: 01-23-04
scale: NONE
dr. by: HAMID
chk. by:

drawing no. 04-03

sheet 2 of 2