MIAMI-DADE COUNTY
BUILDING AND NEIGHBORHOOD COMPLIANCE DEPARTMENT (BNC)
BOARD AND CODE ADMINISTRATION DIVISION

MIAMI-DADE COUNTY
PRODUCT CONTROL SECTION
11805 SW 26 Street, Room 208
Miami, Florida 33175-2474
T (786) 315-2590 F (786) 315-2599
www.miamidade.gov/building/home/asp

NOTICE OF ACCEPTANCE (NOA)

PGT Industries
1070 Technology Drive,
Nokomis, Fl. 34275

SCOPE:

This NOA is being issued under the applicable rules and regulations governing the use of construction materials. The documentation submitted has been reviewed and accepted by Miami-Dade County BNC -Product Control Section to be used in Miami Dade County and other areas where allowed by the Authority Having Jurisdiction (AHJ).

This NOA shall not be valid after the expiration date stated below. The Miami-Dade County Product Control Section (In Miami Dade County) and/or the AHJ (in areas other than Miami Dade County) reserve the right to have this product or material tested for quality assurance purposes. If this product or material fails to perform in the accepted manner, the manufacturer will incur the expense of such testing and the AHJ may immediately revoke, modify, or suspend the use of such product or material within their jurisdiction. BNC reserves the right to revoke this acceptance, if it is determined by Miami-Dade County Product Control Section that this product or material fails to meet the requirements of the applicable building code.
This product is approved as described herein, and has been designed to comply with the Florida Building Code, including the High Velocity Hurricane Zone.

DESCRIPTION: PGT Series Aluminum Clipped Mullion-L.M.I.

APPROVAL DOCUMENT: Drawing No. **6262JR**, titled "Impact-Resistant Aluminum Mullion", sheets 1 through 18 of 18, prepared by manufacturer, dated 12/13/10 and last revised on 05/06/11, signed and sealed by Anthony L. Miller, P.E., bearing the Miami-Dade County Product Control Approval stamp with the Notice of Acceptance number and approval date by the Miami-Dade County Product Control Section.

MISSILE IMPACT RATING: Large and Small Missile Impact Resistant

Limitations:

1. **See Design Pressure (DP) Ratings per tables sheets 5 thru 18 (mullion type, span, opening and clips)**
2. **See applicable anchors, installation, limitations and mullion attachment to the substrates per sheet 1 thru 4.**
3. **DP ratings are based on mullion loading types selected and approved Fenestration Products contribution.**
4. **Lower DP of mullions or Fenestration products shall control for the entire system.**

RENEWAL of this NOA shall be considered after a renewal application has been filed and there has been no change in the applicable building code negatively affecting the performance of this product.

TERMINATION of this NOA will occur after the expiration date or if there has been a revision or change in the materials, use, and/or manufacture of the product or process. Misuse of this NOA as an endorsement of any product, for sales, advertising or any other purposes shall automatically terminate this NOA. Failure to comply with any section of this NOA shall be cause for termination and removal of NOA.

ADVERTISEMENT: The NOA number preceded by the words Miami-Dade County, Florida, and followed by the expiration date may be displayed in advertising literature. If any portion of the NOA is displayed, then it shall be done in its entirety.

INSPECTION: A copy of this entire NOA shall be provided to the user by the manufacturer or its distributors and shall be available for inspection at the job site at the request of the Building Official.
This NOA consists of this page 1 and evidence pages E-1, as well as approval document mentioned above.
The submitted documentation was reviewed by **Ishaq I. Chanda, P.E.**

MIAMI-DADE COUNTY APPROVED

5/19/11

NOTICE OF ACCEPTANCE: EVIDENCE SUBMITTED

A. DRAWINGS

1. Manufacturer's die drawings and sections.
2. Drawing No. **6262JR**, titled "Impact-Resistant Aluminum Mullion", sheets 1 through 18 of 18, prepared by manufacturer, dated 12/13/10 and last revised on 05/06/11, signed and sealed by Anthony L. Miller, P.E.

B. TESTS

1. Test reports on: 1) Air Infiltration Test, per FBC, TAS 202-94
   2) Uniform Static Air Pressure Test, Loading per FBC TAS 202-94
   3) Water Resistance Test, per FBC, TAS 202-94
   4) Large Missile Impact Test per FBC, TAS 201-94
   5) Cyclic Wind Pressure Loading per FBC, TAS 203-94
   6) Forced Entry Test, per FBC 2411 3.2.1, TAS 202-94

   along with marked-up drawings and installation diagram of Clipped Aluminum Mullions, prepared by Fenestration Testing Lab, Inc., Test Report No. **FTL 6443** (samples A-1 thru E-1), dated 02-28-11, signed and sealed by Marlin D. Brinson, P. E.
   (The above test report has an addendum letter dated 05-05-11, issued by FTL, signed and sealed by Marlin D. Brinson, P.E.

C. CALCULATIONS

1. Anchor verification calculations and structural analysis, complying with FBC-2007, prepared by PGT, dated 08/13/10, 01/04/11 and last revised on 05-06-11, signed and sealed by Anthony L. Miller, P.E.
2. Glazing complies w/ ASTME-1300-02 & -04

D. QUALITY ASSURANCE

1. Miami Dade Building and Neighborhood Compliance Department (BNC).

E. MATERIAL CERTIFICATIONS

1. None

F. STATEMENTS

1. Statement letter of conformance and letter of no financial interest, prepared by PGT, dated 03/14/11, signed and sealed by Anthony L. Miller, P.E.
2. Statement letter of lab compliance, as part of above test report.

G. OTHER

1. Test proposal # **10-1070-R**, dated 01/07/11 approved by BNC.

Ishaq I. Chanda

Ishaq I. Chanda, P.E.
Product Control Examiner
NOA No 10-0819.05
Expiration Date: May 26, 2016
Approval Date: May 26, 2011

SUITABLE FOR ALL LOCATIONS REQUIRING NON-IMPACT OR LARGE AND SMALL MISSILE IMPACT-RESISTANT PRODUCTS

FIGURE 1:
MULTIPLE MULLIONS

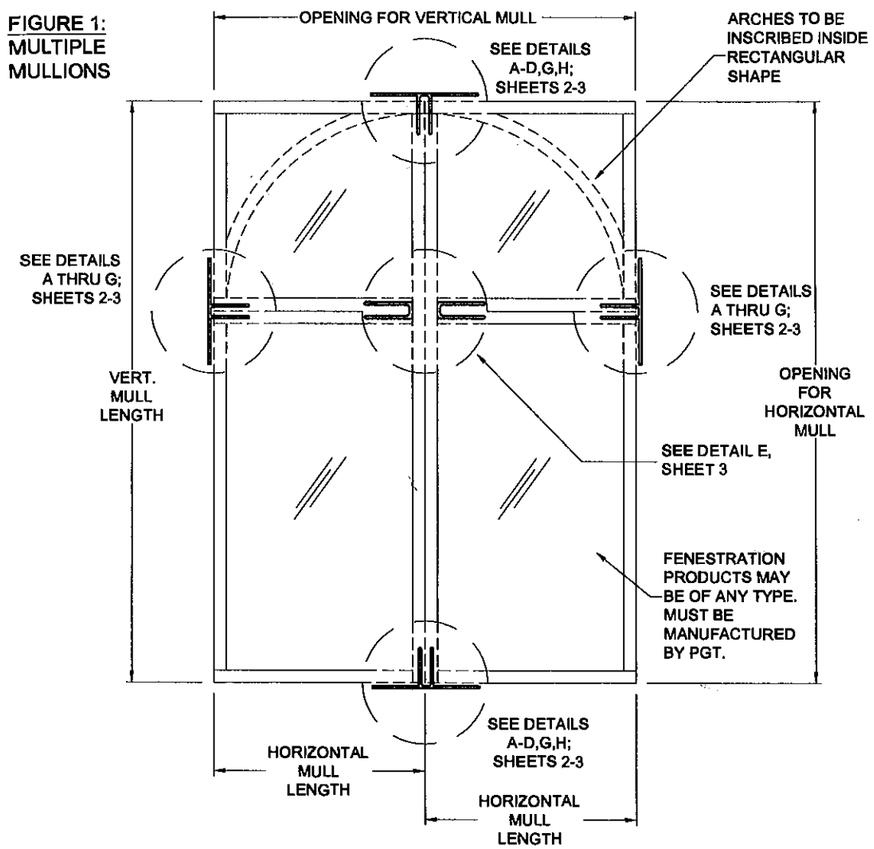

ADDITIONAL EXAMPLES OF MULL CONFIGURATIONS:

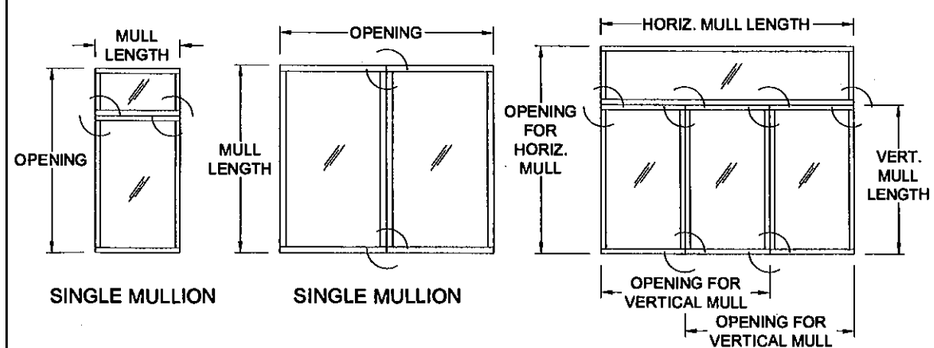

SINGLE MULLION

SINGLE MULLION

MULTIPLE MULLIONS

SEE CORRESPONDING DETAILS FROM FIGURE 1 ABOVE.

GENERAL NOTES:

1) DETAILS SHOWN ARE FOR THE MULLION ONLY. ANCHORS SHOWN ARE IN ADDITION TO ANY ANCHORS REQUIRED FOR THE FENESTRATION PRODUCT INSTALLATION. TYPICAL APPLICATIONS ARE SHOWN. EACH SITUATION IS UNIQUE AND SHOULD BE EVALUATED BY AN EXPERIENCED INSTALLER FOR THE BEST INSTALLATION METHOD. OPTIONAL 1X OR 2X WOOD BUCKS IF USED, MUST BE ANCHORED PROPERLY TO TRANSFER LOADS AND ARE TO BE DESIGNED BY OTHERS.

2) THE TYPE AND NUMBER OF ANCHORS IS CRITICAL TO THE STRUCTURAL PERFORMANCE OF THE MULLED UNITS. MULLS HAVE BEEN TESTED AS "FREE-FLOATING" AND DO NOT NEED TO BE DIRECTLY ATTACHED TO THE MULL CLIPS.

3) THE ANCHORAGE METHODS SHOWN HAVE BEEN DESIGNED TO RESIST THE WINDLOADS CORRESPONDING TO THE REQUIRED DESIGN PRESSURE. MULLIONS ARE CALCULATED TO DEFLECT NO MORE THAN L/180. THE 1/3 STRESS INCREASE WAS NOT USED IN THIS ANCHOR EVALUATION. THE 1.6 LOAD DURATION FACTOR WAS USED FOR THE EVALUATION OF WOOD SCREWS. THE CENTER-TO-CENTER HOLE DISTANCE IN MULL CLIPS HAVE BEEN SPACED TO ALLOW FOR THE FULL ANCHOR LOAD.

4) THE MULLIONS HAVE BEEN DESIGNED & TESTED TO COMPLY WITH THE REQUIREMENTS OF THE FLORIDA BUILDING CODE, 2007 EDITION, SECTION 1626. MULLIONS ARE APPROVED FOR IMPACT AND NON-IMPACT APPLICATIONS AND ARE IN COMPLIANCE FOR USE IN THE HVHZ. MULLIONS ARE ONLY TO BE USED WITH PGT-APPROVED FENESTRATION PRODUCTS HAVING CURRENT APPROVALS.

5) PROPER SEALING OF ENTIRE ASSEMBLY IS THE RESPONSIBILITY OF OTHERS AND IS BEYOND THE SCOPE OF THESE INSTRUCTIONS.

6) USE THE COMBINED SPAN OF ONLY TWO ADJACENT FENESTRATION PRODUCTS TO DETERMINE PRESSURES AND ANCHORAGE FOR THE COMMON MULLION, SEE EXAMPLES ON THIS SHEET AND SHEET 18. FOR MULTIPLE UNITS, CONSIDER ONLY TWO ADJACENT UNITS AT A TIME WHEN USING THE DESIGN PRESSURE AND ANCHORAGE TABLES. THE LOWEST DESIGN PRESSURE OF MULTIPLE MULLIONS OR FENESTRATION PRODUCTS SHALL APPLY.

7) WHEN FINDING YOUR SIZE IN THE MULLION TABLES, ALWAYS ROUND UP TO THE NEXT SIZE SHOWN ON THE TABLE(S).

8) ANCHOR EMBEDMENT TO BASE MATERIAL SHALL BE BEYOND WALL DRESSING OR STUCCO. WOOD BUCKS BY OTHERS, MUST BE ANCHORED PROPERLY TO TRANSFER LOADS TO THE STRUCTURE. ANCHORS SHALL BE COATED OR CORROSION RESISTANT AS APPROPRIATE FOR SUBSTRATE MATERIAL. DISSIMILAR MATERIALS SHALL BE PROTECTED AS REQUIRED TO PREVENT REACTIONS.

9) REFERENCE: TEST REPORTS: FTL-6443; ELCO ULTRACON/CRETEFLEX NOA'S; ANSI/AF&PA NDS-2005 FOR WOOD CONSTRUCTION; ADM-2005 ALUMINUM DESIGN MANUAL

INSTRUCTIONS:

1) DETERMINE DESIGN PRESSURE REQUIREMENT FOR THE STRUCTURE.

2) DETERMINE THE DESIGN PRESSURE FOR THE MULLION USING THE ENCLOSED TABLES. THIS DESIGN PRESSURE MUST MEET OR EXCEED THE VALUE FROM STEP 1. IF DIFFERENT MULLION TYPES ARE USED IN AN ASSEMBLY, MULTIPLE TABLES WILL NEED TO BE EVALUATED. FOR MULTIPLE MULLIONS, THE LOWEST DESIGN PRESSURE SHALL APPLY TO ALL MULLIONS.

3) DESIGN PRESSURE FROM STEP 2 REQUIRES THAT THE PRODUCT BE INSTALLED IN ACCORDANCE WITH THIS SHEETSET.

4) VERIFY THE DESIGN PRESSURE FOR THE FENESTRATION PRODUCTS USED WITH THIS MULLION SYSTEM. THE LOWER DESIGN PRESSURE, OF MULLIONS OR FENESTRATION PRODUCTS, WILL APPLY TO THE OVERALL ASSEMBLY.

SEE EXAMPLES ON SHEET 18.

GENERAL NOTES..... 1
INSTRUCTIONS..... 1
ELEVATIONS..... 1
MULL TO 2X WOOD..... 2
MULL TO 1X & MASONRY..... 2
INSTALLATION NOTES..... 2
MULL TO MASONRY..... 3
MULL TO STEEL STUD..... 3
MULL TO MULL..... 3
ANCHOR SPECS..... 3
ALTERNATATE CLIPS..... 4
BAY MULL INSTALLATION..... 4
1 X 2 X .125 MULL SPECS..... 5
1 X 2 X .375 MULL SPECS..... 6
1 X 2.75 X .375 MULL SPECS..... 7
1 X 2.75 X .65 MULL SPECS..... 8
1 X 3.125 X .500 MULL SPECS..... 9
1.25 X 3.188 X .285 MULL SPECS... 10
1 X 4 X .125 MULL SPECS..... 11
1 X 4 X .375 MULL SPECS..... 12
2 X 4 X .25 MULL SPECS..... 13
2 X 6 X .25 MULL SPECS..... 14
1.28 X 2.11 X .125 MULL SPECS.... 15
30° X 3.25 BAY MULL SPECS..... 16
45° X 3.25 BAY MULL SPECS..... 17
EXAMPLES 1 & 2..... 18

PGT®
1070 TECHNOLOGY DRIVE
N. VENICE, FL 34275
P.O. BOX 1529
NOKOMIS, FL 34274
FL CERT. OF AUTH.# 29296

Title: IMPACT-RESISTANT ALUMINUM TUBE MULLIONS
Description: GENERAL NOTES AND ELEVATION
Drawing No. 6262JR
Sheet: 1 of 18
Rev:
Series: N/A
Scale: N/A
Checked By:
Date:
Revision:
Drawn By: J ROSOWSKI
Date: 12/13/10
Rev. By:
Date:

Approved as complying with the Florida Building Code
Date May 26, 2011
NOA# 10-0819.05
Miami Dade Product Control
By Ishaq I. Ghani

ANTHONY LYNN MILLER
LICENSE
No. 58705
5/6/11
STATE OF FLORIDA
PROFESSIONAL ENGINEER

A. LYNN MILLER, P.E.
FL P.E.# 58705

DETAIL A:
MULLION TO 2X WOOD BUCK OR WOOD FRAMING

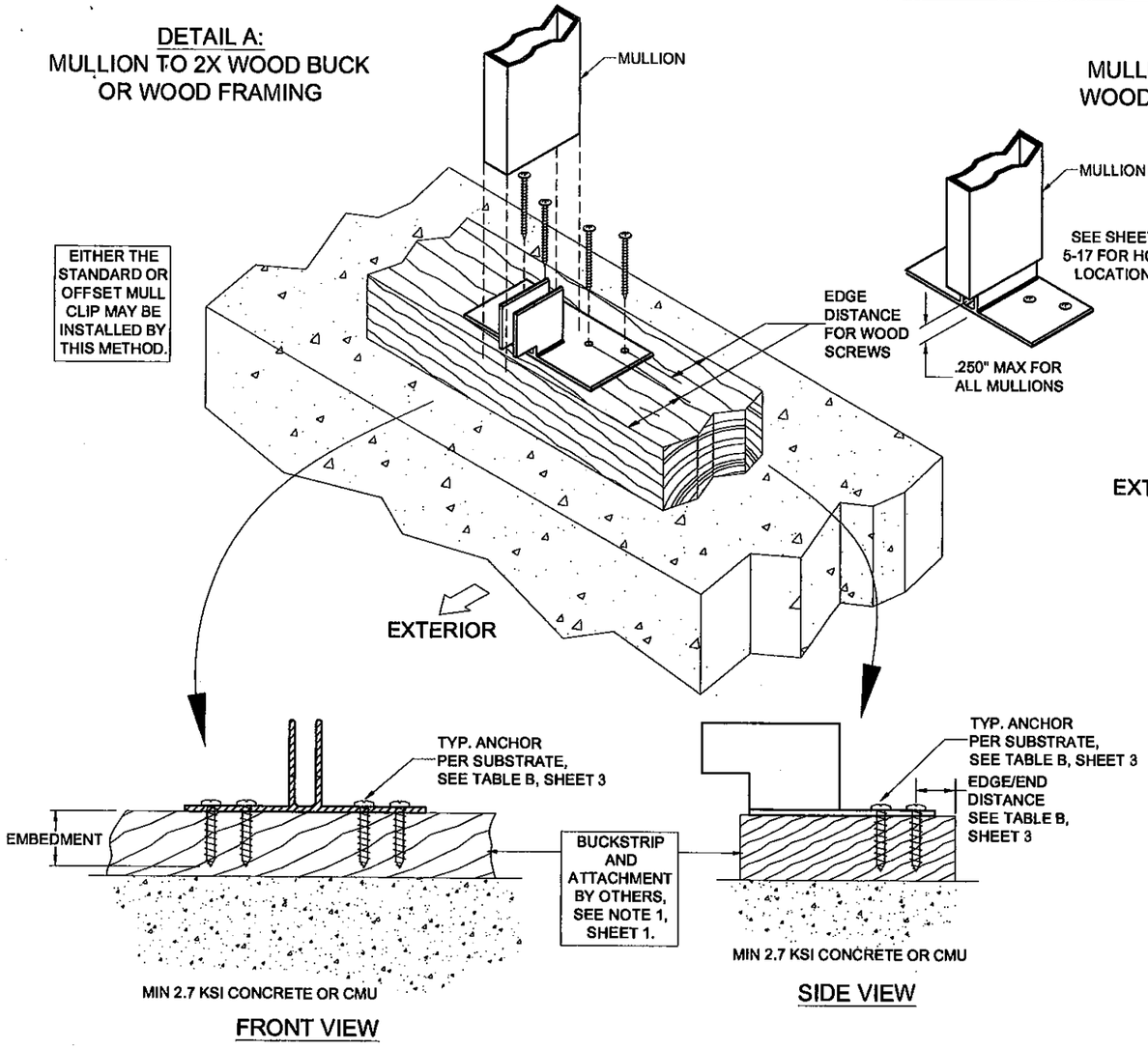

DETAIL B:
MULLION ATTACHED TO 1X WOOD BUCK AND MASONRY

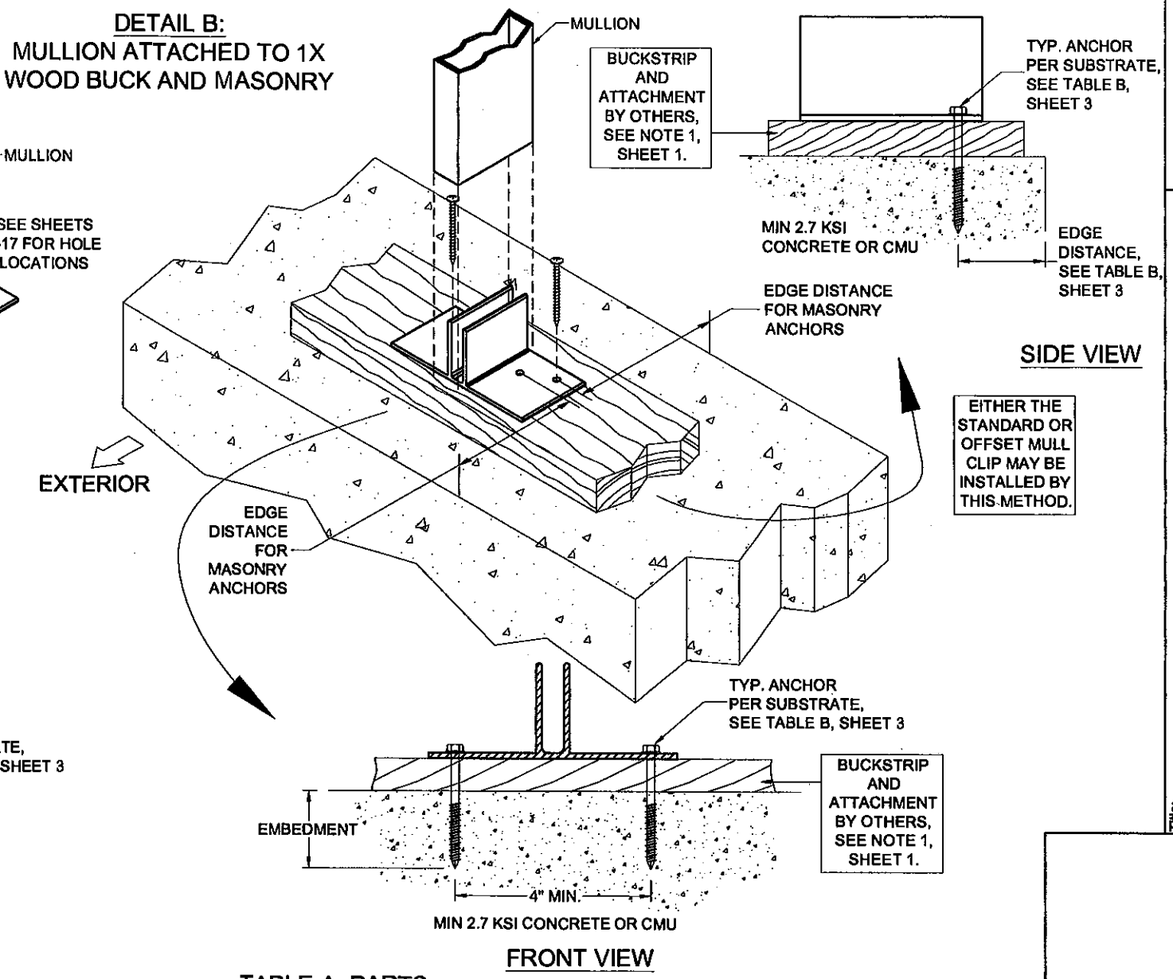

INSTALLATION NOTES:

1) FOR MASONRY APPLICATIONS IN MIAMI-DADE COUNTY, USE ONLY MIAMI-DADE COUNTY APPROVED ELCO ULTRACON ANCHOR OR ELCO 1/4" CRETE-FLEX MASONRY ANCHORS PER TABLE B, SHEET 3.

2) FOR WOOD OR METAL APPLICATIONS USE ANCHORS PER TABLE B, SHEET 3.

3) ANCHOR EMBEDMENT TO BASE MATERIAL SHALL BE BEYOND WALL DRESSING OR STUCCO.

4) QUANTITY OF ANCHORS AND MULLION SIZE SHOWN ABOVE ARE FOR PICTORIAL REPRESENTATION ONLY. BECAUSE THE ANCHOR CAPACITY IS BASED PARTLY ON THE ANCHOR TO ANCHOR DISTANCE, THE CORRECT QUANTITY AND LOCATION OF ANCHORS MUST BE FOLLOWED, REFER TO THE TABLES ON THE FOLLOWING SHEETS. FOR DETAILS A-D, EITHER THE STANDARD OR INTERIOR CLIP MAY BE USED.

5) ANCHOR HEAD TYPE MAY BE PANHEAD, HEXHEAD OR FLATHEAD. THE ANCHOR HOLES IN THE STANDARD AND OFFSET MULL CLIP MAY BE COUNTERSUNK.

TABLE A, PARTS

Mull Dimension	PGT Part #			
	Mullion	Standard Clip	Offset Clip	U-Channel
1 X 2 X .125	66605	666113M	6661118M	666243M
1 X 2 X .375	666006	666114M	6661119M	666244M
1 X 2.75 X .375	66607	666115M	6661120M	666245M
1 X 2.75 X .65	66608	666116M	6661121M	666246M
1 X 3.125 X .500	66637M	6661116M	6661114M	56624M
1.25 X 3.188 X .265	66641M	6661117M	6661113M	56624M
1 X 4 X .125	69364	666111M	6661122M	666241M
1 X 4 X .375	66610	66112M	6661123M	666242M
2 X 4 X .25	66602	666261M	N/A	666271M
2 X 6 X .25	66604	666262M	N/A	66272M
1.26 X 2.11 X .125	69370	666323M	N/A	N/A
30 Degree	66649	666324M	N/A	N/A
45 Degree	66650	666325M	N/A	N/A

PGT®
1070 TECHNOLOGY DRIVE
N. VENICE, FL 34275
P.O. BOX 1529
NOKOMIS, FL 34274
FL CERT. OF AUTH.# 29296

Title: IMPACT-RESISTANT ALUMINUM TUBE MULLIONS
Description: INSTALLATION INSTRUCTIONS A
Series: N/A
Drawing No. 6262JR
Sheet: 2 of 18
Rev:
Scale: N/A
Date: 12/13/10
Checked By:
Date:
Revision:
Date:
Drawn By: J ROSOWSKI
Rev. By:

Approved as complying with the Florida Building Code
Date May 26, 2011
NOA# 10-0818.05
Miami Dade Product Control
By Ishaq I. Chanda

ANTHONY LYNN MILLER
LICENSE
No. 58705
STATE OF FLORIDA
PROFESSIONAL ENGINEER
5/6/11

A. LYNN MILLER, P.E.
FL P.E.# 58705

DETAIL C:
MULLION DIRECTLY ATTACHED TO MASONRY STRUCTURE

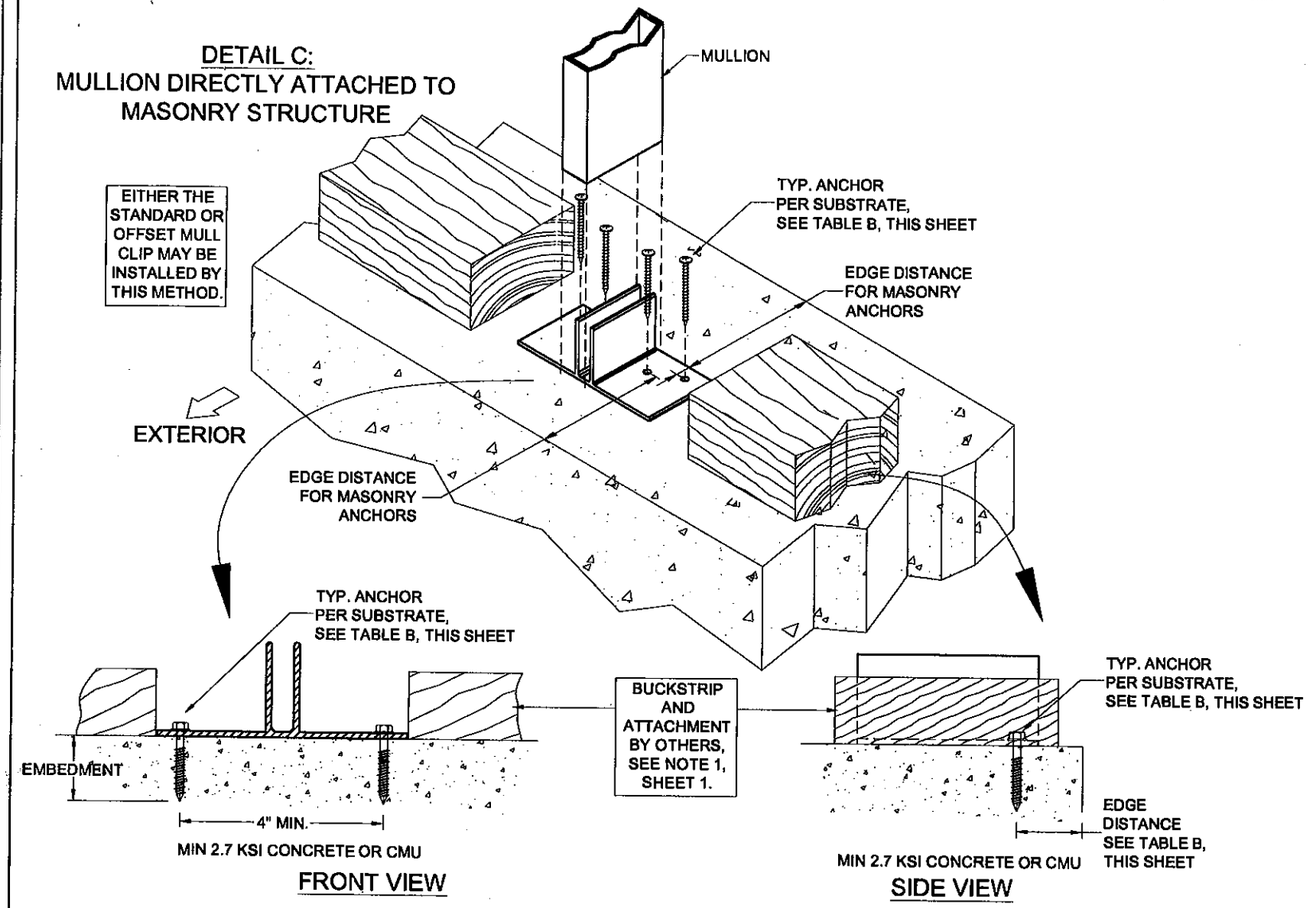

TABLE B, ANCHORS

#	Substrate	Anchor	Minimum Embedment	Min. Edge Distance
A	Concrete (min. 2.7 ksi)	1/4" Elco UltraCon	1-3/8"	2-1/2"
	Concrete (min. 3.35 ksi)	1/4" Elco Crete-Flex SS4	1-3/4"	2-1/2"
	Ungrouted CMU (ASTM C-90)	1/4" Elco UltraCon	1-1/4"	2-1/2"
		1/4" Elco Crete-Flex SS4	1-1/4"	2-1/2"
B	Concrete (min. 2.7 ksi)	1/4" Elco UltraCon	1-3/8"	1"
	Concrete (min. 3.35 ksi)	1/4" Elco Crete-Flex SS4	1-3/4"	1"
	Ungrouted CMU (ASTM C-90)	1/4" Elco UltraCon	1-1/4"	1"
		1/4" Elco Crete-Flex SS4	1-1/4"	1-3/4"
C	P.T. Southern Pine	#12 Sheet Metal Screw (G5)	1-3/8"	3/4"
		1/4" Elco UltraCon	1-3/8"	1"
		1/4" Elco Crete-Flex SS4	1-3/4"	1"
	Aluminum, 6063-T5	#12 Sheet Metal Screw (G5)	0.125"	1/2"
	Steel Stud, Gr. 33	#12 Sheet Metal Screw (G5)	18ga (0.048")	1/2"
	A36 Steel	#12 Sheet Metal Screw (G5)	18ga (0.048")	1/2"

DETAIL D:
MULLION ATTACHED TO STEEL STUD

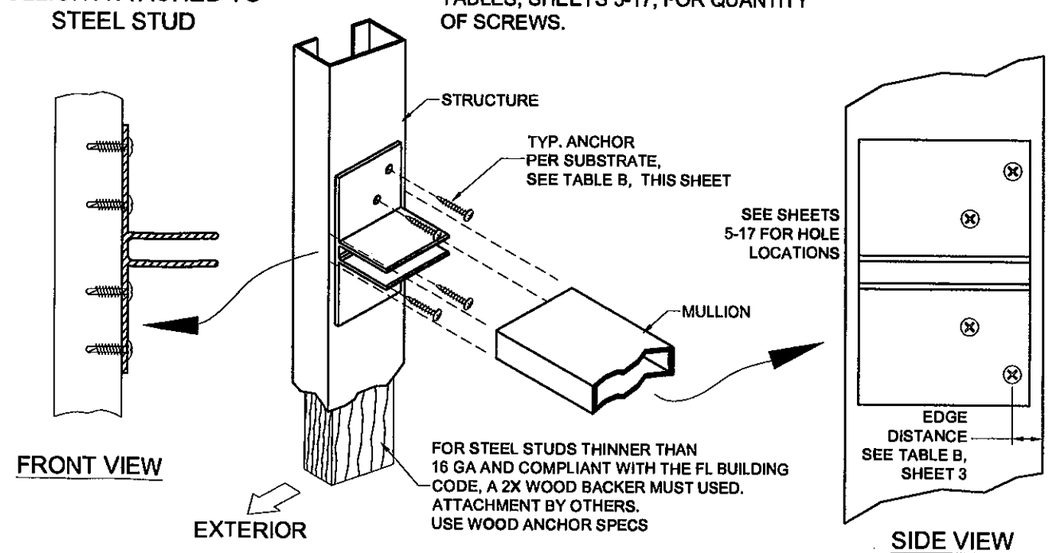

NOTES:
1) FOR 2X WOOD-BACKED STEEL STUDS, WOOD ANCHOR VALUES MAY BE USED.
2) SEE CORRESPONDING MULLION TABLES, SHEETS 5-17, FOR QUANTITY OF SCREWS.

DETAIL E:
MULLION TO MULLION INTERSECTION

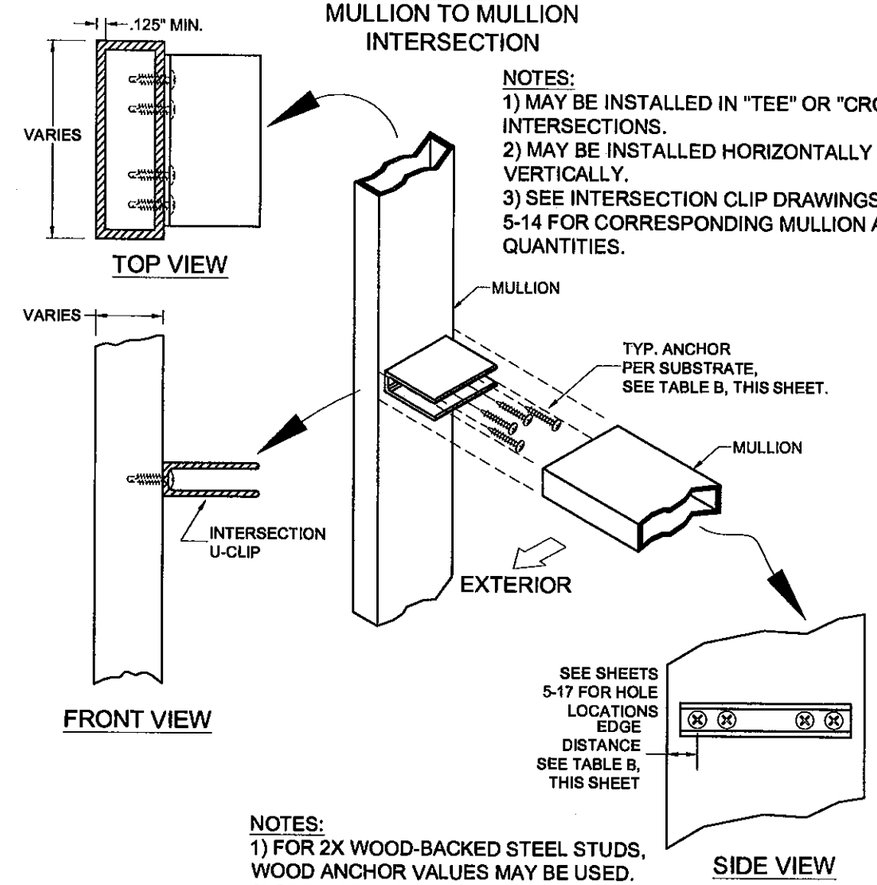

NOTES:
1) MAY BE INSTALLED IN "TEE" OR "CROSS" INTERSECTIONS.
2) MAY BE INSTALLED HORIZONTALLY (SHOWN) OR VERTICALLY.
3) SEE INTERSECTION CLIP DRAWINGS, SHEETS 5-14 FOR CORRESPONDING MULLION AND ANCHOR QUANTITIES.

DCL®
1070 TECHNOLOGY DRIVE
N. VENICE, FL 34275
P.O. BOX 1529
NOKOMIS, FL 34274
FL CERT. OF AUTH.# 29296

Title: IMPACT-RESISTANT ALUMINUM TUBE MULLIONS
Description: INSTALLATION INSTRUCTIONS B
Series: N/A | Scale: N/A | Drawing No. 6262JR | Sheet: 3 of 18
Drawn By: J ROSOWSKI | Date: 12/13/10 | Checked By: | Date: | Rev.:
Rev. By: | Date: | Revision:

Approved as complying with the Florida Building Code
Date May 26, 2011
NOA# 10-0819.05
Miami Dade Product Control
By

ANTHONY LYNN MILLER
LICENSE
No. 58705
STATE OF FLORIDA
PROFESSIONAL ENGINEER
5/6/11

A. LYNN MILLER, P.E.
FL P.E.# 58705

DETAIL F:
FIELD-MODIFIED MULLION CLIP

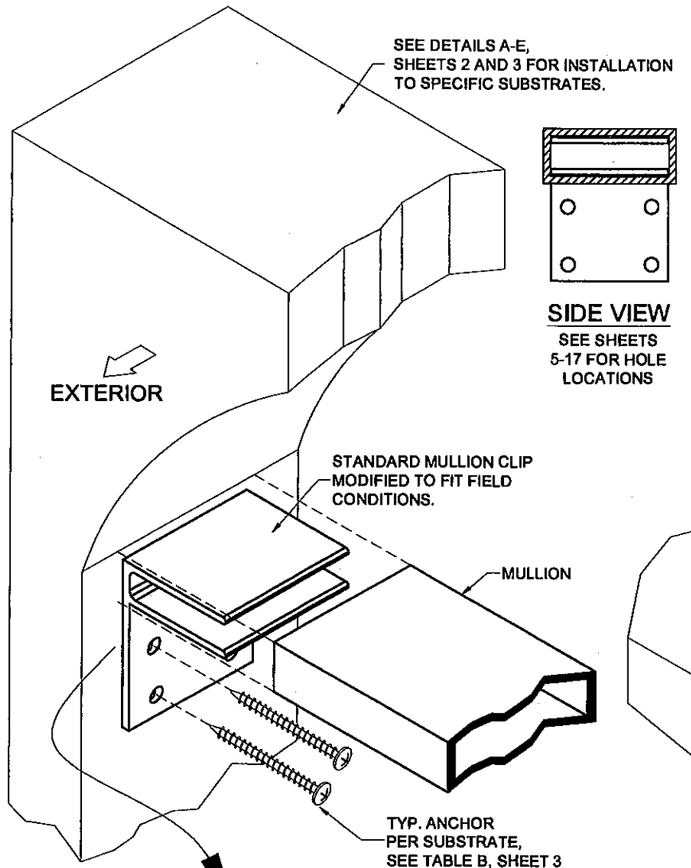

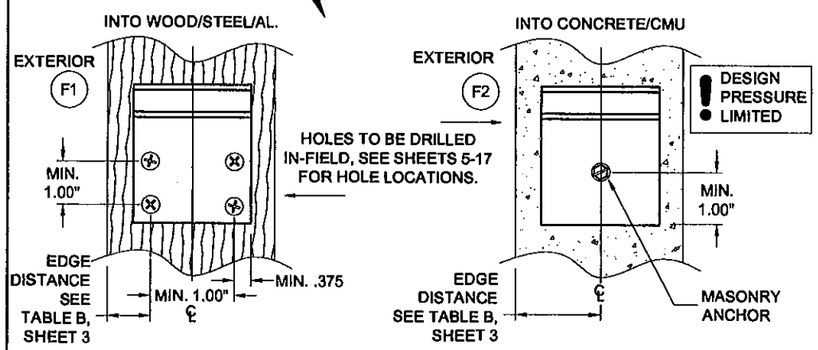

DETAIL G:
ANGLE MULLION CLIP

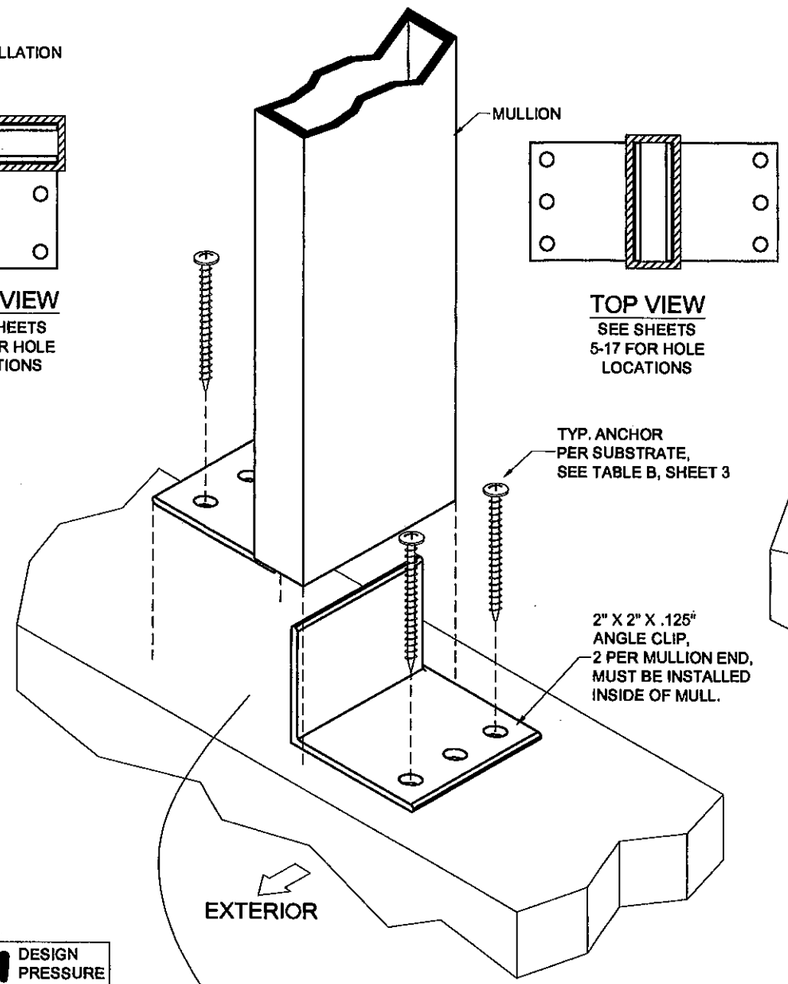

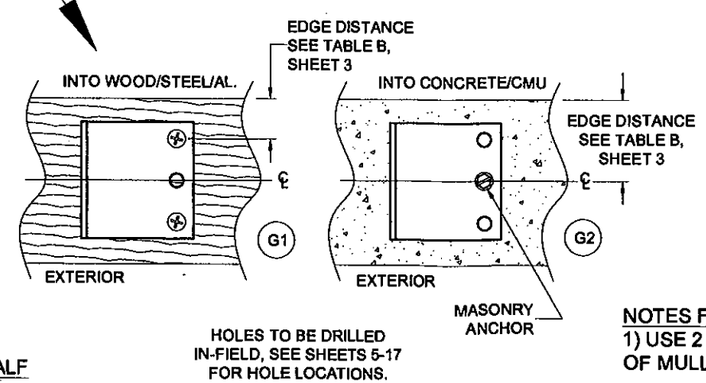

DETAIL H:
BAY MULLION INSTALLATION

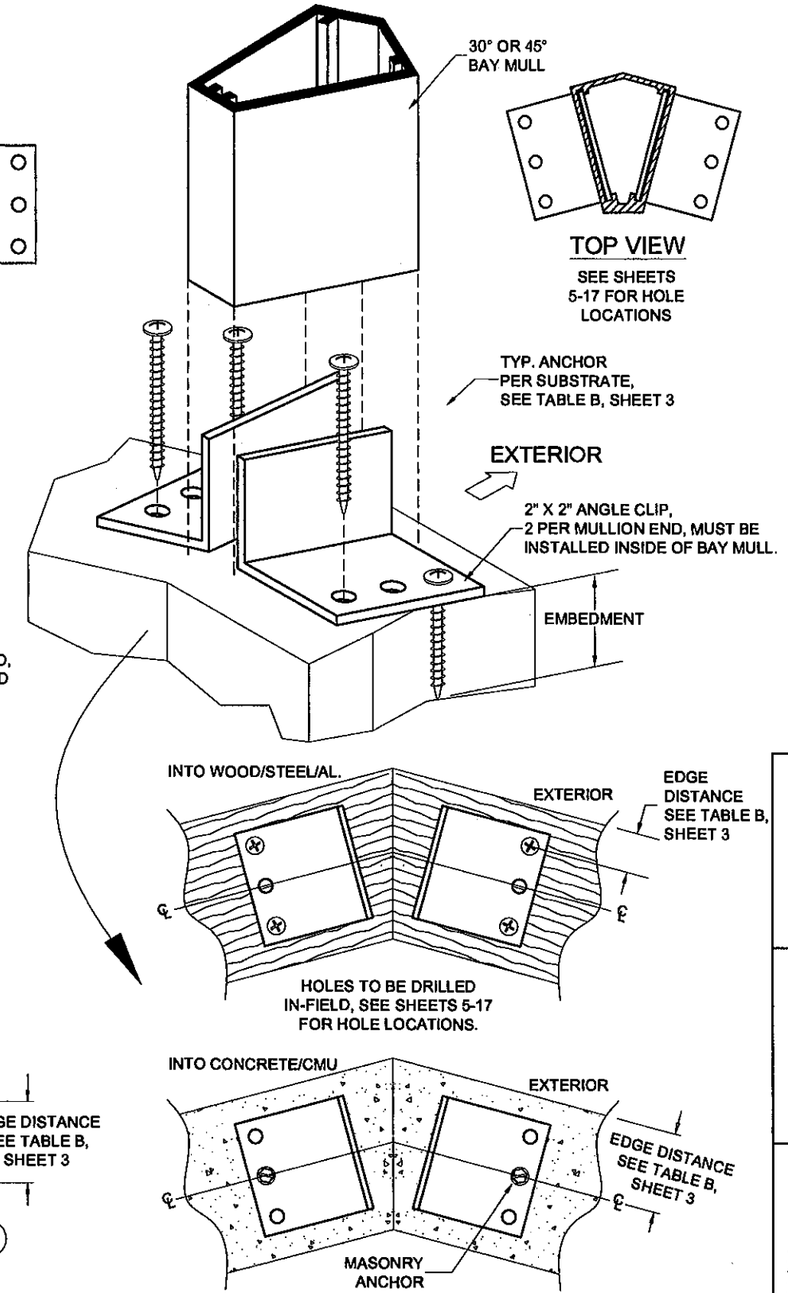

NOTES FOR INSTALLATION OPTIONS F AND G:

1) DETAILS F1, G1 AND G2: IF ALL ANCHOR LIMITATIONS FROM THIS SHEETSET ARE MET, THEN THE FULL DP OF THAT MULLION MAY BE USED, PROVIDED THAT THE OVERALL SYSTEM DESIGN PRESSURE REQUIREMENTS ARE MET.
2) DETAIL F2: IF ALL ANCHOR LIMITATIONS FROM THIS SHEETSET ARE MET, THEN HALF OF THE DESIGN PRESSURE OF THAT MULLION MAY BE USED.
3) DETAILS F1, F2, G1, AND G2 ARE NOT APPLICABLE TO THE 2X4, 2X6 OR BAY MULLION.
4) SEE SHEETS 5-12 FOR CORRESPONDING MULLION AND ANCHOR QUANTITIES.

NOTES FOR INSTALLATION OPTION H:

1) USE 2 ANGLE CLIPS PER MULLION END. CLIP MUST BE INSERTED INSIDE OF MULLION.

2) SEE CORRESPONDING MULLION TABLES, SHEETS 16 & 17, FOR QUANTITY OF SCREWS.

DCI®
1070 TECHNOLOGY DRIVE
N. VENICE, FL 34275
P.O. BOX 1529
NOKOMIS, FL 34274
FL CERT. OF AUTH.# 29296

Title:	IMPACT-RESISTANT ALUMINUM TUBE MULLIONS
Description:	INSTALLATION INSTRUCTIONS C
Series:	N/A
Scale:	N/A
Drawing No.	6262JR
Sheet:	4 of 18
Drawn By:	J ROSOWSKI
Date:	12/13/10
Checked By:	
Date:	
Rev:	
Rev. By:	
Date:	
Revision:	

Approved as complying with the Florida Building Code
Date May 26, 2011
NOA# 10-0819.05
Miami Dade Product Control
By Craig L. Chandler

ANTHONY LYNN MILLER
LICENSE
No. 58705
STATE OF FLORIDA
PROFESSIONAL ENGINEER
5/6/11

A. LYNN MILLER, P.E.
FL P.E.# 58705

1" X 2" X .125" TUBE MULLION AND CLIP

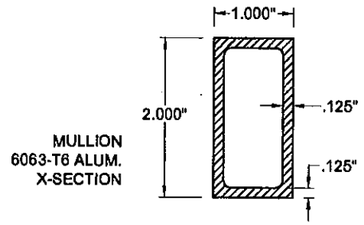

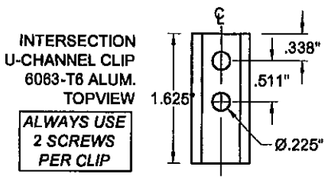

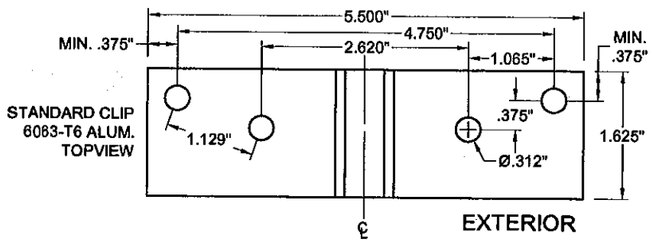

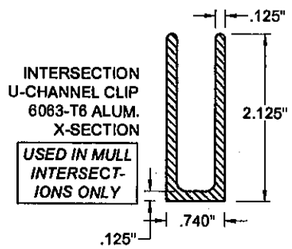

TABLE 1A

1 x 2 x .125 Alum. Tube Mullion		Rectangular Loading						Design Pressure (lbs/ft²)																				
		Opening (Vertical or Horizontal)																										
		50 in			60 in			70 in			80 in			90 in			100 in			120 in			140 in			160 in		
Anchor and Substrate Type, See Table B		A	B	C	A	B	C	A	B	C	A	B	C	A	B	C	A	B	C	A	B	C	A	B	C	A	B	C
# of Anchors		2	2	4	2	2	4	2	2	4	2	2	4	2	2	4	2	2	4	2	2	4	2	2	4	2	2	4
Mull Length (Vertical or Horizontal)	42 in	91	91	91	74	74	74	63	63	63	55	55	55	49	49	49	44	44	44	36	36	36	31	31	31	27	27	27
	48 in	62	62	62	50	50	50	43	43	43	37	37	37	33	33	33	29	29	29	24	24	24	21	21	21	18	18	18
	50.625 in	53	53	53	43	43	43	36	36	36	32	32	32	28	28	28	25	25	25	21	21	21	18	18	18	16	16	16
	54 in	44	44	44	36	36	36	30	30	30	26	26	26	23	23	23	21	21	21	17	17	17	15	15	15			
	60 in	33	33	33	27	27	27	22	22	22	19	19	19	17	17	17	15	15	15									
	63 in	26	26	26	23	23	23	19	19	19	17	17	17	15	15	15												
	66 in	25	25	25	20	20	20	17	17	17	15	15	15															
	72 in	19	19	19	16	16	16																					
	76 in	16	16	16																								
	78 in	15	15	15																								

TABLE 1B

NOTE: THE ROW HEADING "# OF ANCHORS" ON THE TABLES REFERS TO THE STANDARD AND OFFSET CLIP ONLY.

1 x 2 x .125 Alum. Tube Mullion		Triangular/Trapezoidal Loading						Design Pressure (lbs/ft²)																				
		Opening (Vertical or Horizontal)																										
		50 in			60 in			70 in			80 in			90 in			100 in			120 in			140 in			160 in		
Anchor and Substrate Type, See Table B		A	B	C	A	B	C	A	B	C	A	B	C	A	B	C	A	B	C	A	B	C	A	B	C	A	B	C
# of Anchors		2	2	4	2	2	4	2	2	4	2	2	4	2	2	4	2	2	4	2	2	4	2	2	4	2	2	4
Mull Length (Vertical or Horizontal)	42 in	130	130	130	116	116	116	108	108	106	104	104	104	104	104	104	104	104	104	104	104	104	104	104	104	104	104	104
	46 in	84	84	84	73	73	73	67	67	67	63	63	63	61	61	61	61	61	61	61	81	61	61	61	61	61	61	61
	50.825 in	71	71	71	62	62	62	56	56	56	52	52	52	50	50	50	49	49	49	49	49	49	49	49	49	49	49	49
	54 in	57	57	57	50	50	50	45	45	45	41	41	41	39	39	39	38	38	36	36	38	38	36	38	38	38	36	36
	60 in	41	41	41	35	35	35	32	32	32	29	29	29	27	27	27	26	26	26	25	25	25	25	25	25	25	25	25
	63 in	35	35	35	30	30	30	27	27	27	24	24	24	23	23	23	22	22	22	21	21	21	21	21	21	21	21	21
	66 in	31	31	31	28	28	28	23	23	23	21	21	21	19	19	19	18	18	18	17	17	17	17	17	17	17	17	17
	72 in	23	23	23	20	20	20	17	17	17	16	16	16	15	15	15												
	76 in	20	20	20	17	17	17	15	15	15																		
	78 in	18	18	18	15	15	15																					

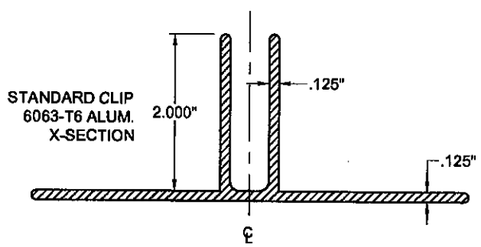

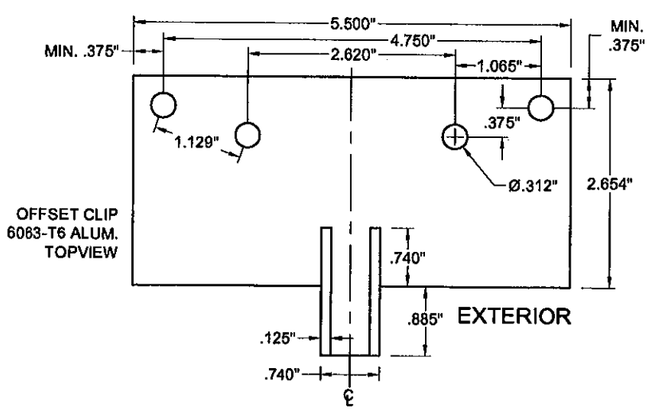

TABLE NOTES:

1) LINEAR INTERPOLATION BETWEEN SIZES AND/OR DESIGN PRESSURES IS ALLOWABLE.
2) SCREW PATTERN APPLIES TO BOTH THE STANDARD AND OFFSET CLIP.
3) ALL MULLION CLIPS MAY BE FACTORY MACHINED AND CONTAIN UNUSED HOLES. IF NEEDED, HOLES MAY BE DRILLED IN THE FIELD FOLLOWING DIMENSIONS GIVEN ON THIS SHEET.
4) THE STANDARD AND OFFSET CLIP MAY BE COUNTERSUNK. THE INTERSECTION U-CLIP MAY NOT BE COUNTERSUNK.
5) SEE SHEETS 2-4 FOR GENERAL ANCHOR DESCRIPTIONS AND INSTALLATION METHODS.
6) FOR FENESTRATION PRODUCTS WHERE ALL FOUR SIDES ARE ANCHORED TO THE SUBSTRATE, USE THE TRIANGULAR/TRAPEZOIDAL LOADING TABLES (TABLE 1B). FOR FENESTRATION PRODUCTS WHERE NOT ALL FOUR SIDES ARE ANCHORED AND FOR ALL HINGED DOORS, USE THE RECTANGULAR LOADING TABLES, (TABLE 1A).

ALLOWABLE SCREW PATTERNS

INTO CONCRETE/CMU

INTO WOOD/STEEL/AL.

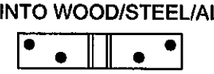

PGT®
1070 TECHNOLOGY DRIVE
N. VENICE, FL 34275
P.O. BOX 1529
NOKOMIS, FL 34274
FL CERT. OF AUTH.# 29296

Title: IMPACT-RESISTANT ALUMINUM TUBE MULLIONS
Description: 1 X 2 X .125 MULL SPECS
Series: N/A
Drawing No. 6262JR
Sheet: 5 of 18
Rev:
Scale: N/A
Date: 12/13/10
Checked By:
Date:
Revision:
Drawn By: J ROSOWSKI
Date:
Rev. By:

Approved as noted subject to the Florida Building Code
Date May 04, 2011
NOAC 10-0814.05
Miami Dade Product Control
By Ishwar I. Chand

ANTHONY LYNN MILLER
LICENSE
No. 58705
5/6/11
STATE OF FLORIDA
PROFESSIONAL ENGINEER

A. LYNN MILLER, P.E.
FL P.E.# 58705

1" X 2" X .375" TUBE MULLION AND CLIP

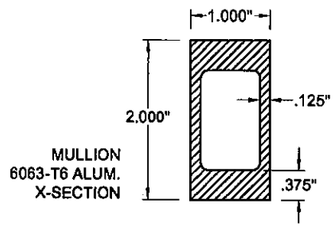

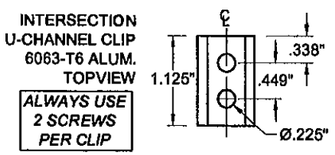

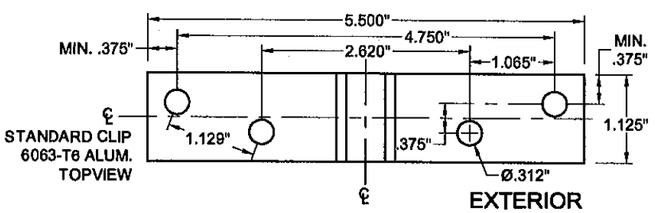

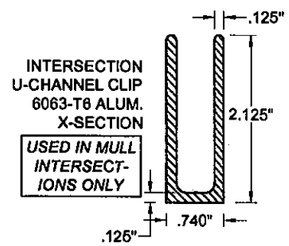

TABLE 2A

1 x 2 x .375 Alum. Tube Mullion	Rectangular Loading						Design Pressure (lbs/ft²)																							
	Opening (Vertical or Horizontal)																													
	50 in			60 in			70 in			80 in			90 in			100 in			120 in			140 in			160 in		
Anchor and Substrate Type, See Table B	A	B	C	A	B	C	A	B	C	A	B	C	A	B	C	A	B	C	A	B	C	A	B	C	A	B	C	A	B	C
# of Anchors	2	2	4	2	2	4	2	2	4	2	2	4	2	2	4	2	2	4	2	2	4	2	2	4	2	2	4	2	2	4
Mull Length (Vertical or Horizontal)																														
42 in	119	97	119	109	81	109	99	69	99	89	61	89	79	54	79	71	49	71	59	40	59	51	35	51	44	30	44			
48 in	101	85	101	82	71	82	69	61	69	60	53	60	53	47	53	48	42	48	40	35	40	34	30	34	30	27	30			
50.625 in	86	61	86	70	67	70	59	58	59	51	50	51	45	45	45	41	40	41	34	34	34	29	29	29	25	25	25			
54 in	72	72	72	58	58	58	49	49	49	42	42	42	37	37	37	33	33	33	28	28	28	24	24	24	21	21	21			
60 in	53	53	53	43	43	43	36	36	36	31	31	31	27	27	27	25	25	25	20	20	20	17	17	17	15	15	15			
63 in	46	46	46	37	37	37	32	32	32	27	27	27	24	24	24	21	21	21	18	18	18	15	15	15						
66 in	40	40	40	33	33	33	28	28	28	24	24	24	21	21	21	19	19	19	15	15	15									
72 in	31	31	31	26	26	26	21	21	21	18	18	18	16	16	16															
76 in	27	27	27	22	22	22	18	18	18	16	16	16																		
78 in	25	25	25	20	20	20	17	17	17	15	15	15																		

NOTE: THE ROW HEADING "# OF ANCHORS" ON THE TABLES REFERS TO THE STANDARD AND OFFSET CLIP ONLY.

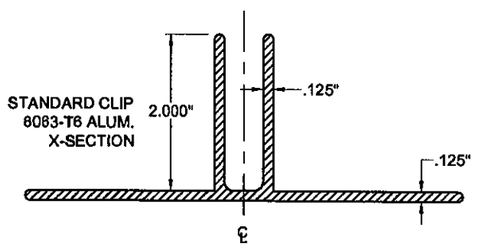

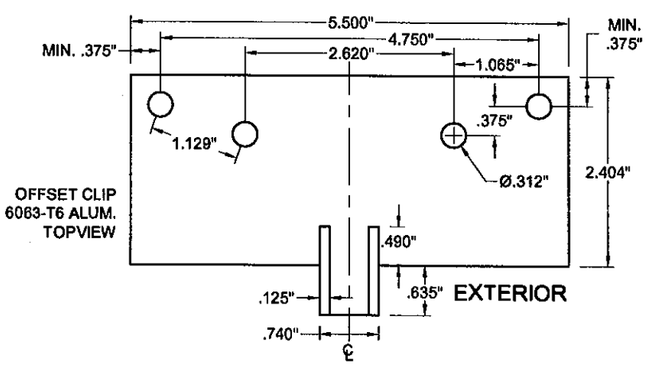

TABLE 2B

1 x 2 x .375 Alum. Tube Mullion	Triangular/Trapezoidal Loading						Design Pressure (lbs/ft²)																				
	Opening (Vertical or Horizontal)																										
	50 in			60 in			70 in			80 in			90 in			100 in			120 in			140 in			160 in		
Anchor and Substrate Type, See Table B	A	B	C	A	B	C	A	B	C	A	B	C	A	B	C	A	B	C	A	B	C	A	B	C	A	B	C
# of Anchors	2	2	4	2	2	4	2	2	4	2	2	4	2	2	4	2	2	4	2	2	4	2	2	4	2	2	4
Mull Length (Vertical or Horizontal)																											
42 in	170	138	170	170	126	170	170	119	170	169	116	169	169	116	169	169	116	169	169	116	169	169	116	169	169	116	169
48 in	136	115	136	119	103	119	109	98	109	103	91	103	100	89	100	99	89	99	99	89	99	99	89	99	99	89	99
50.625 in	115	107	115	100	95	100	90	88	90	85	83	85	81	81	81	80	80	80	80	80	80	80	80	80	80	80	80
54 in	93	93	93	81	81	81	73	73	73	67	67	67	64	64	64	62	62	62	62	62	62	62	62	62	62	62	62
60 in	67	67	67	56	56	56	51	51	51	47	47	47	44	44	44	42	42	42	41	41	41	41	41	41	41	41	41
63 in	57	57	57	49	49	49	44	44	44	40	40	40	37	37	37	35	35	35	33	33	33	33	33	33	33	33	33
66 in	50	50	50	42	42	42	38	38	38	34	34	34	32	32	32	30	30	30	28	28	28	28	28	28	28	28	28
72 in	38	38	38	32	32	32	28	28	28	26	26	26	24	24	24	22	22	22	20	20	20	20	20	20	20	20	20
76 in	32	32	32	27	27	27	24	24	24	21	21	21	20	20	20	18	18	18	17	17	17	16	16	16	16	16	16
78 in	30	30	30	25	25	25	22	22	22	20	20	20	18	18	18	17	17	17	15	15	15						
90 in	19	19	19	16	16	16																					

TABLE NOTES:

1) LINEAR INTERPOLATION BETWEEN SIZES AND/OR DESIGN PRESSURES IS ALLOWABLE.
2) SCREW PATTERN APPLIES TO BOTH THE STANDARD AND OFFSET CLIP.
3) ALL MULLION CLIPS MAY BE FACTORY MACHINED AND CONTAIN UNUSED HOLES. IF NEEDED, HOLES MAY BE DRILLED IN THE FIELD FOLLOWING DIMENSIONS GIVEN ON THIS SHEET.
4) THE STANDARD AND OFFSET CLIP MAY BE COUNTERSUNK. THE INTERSECTION U-CLIP MAY NOT BE COUNTERSUNK.
5) SEE SHEETS 2-4 FOR GENERAL ANCHOR DESCRIPTIONS AND INSTALLATION METHODS.
6) FOR FENESTRATION PRODUCTS WHERE ALL FOUR SIDES ARE ANCHORED TO THE SUBSTRATE, USE THE TRIANGULAR/TRAPEZOIDAL LOADING TABLES (TABLE 2B). FOR FENESTRATION PRODUCTS WHERE NOT ALL FOUR SIDES ARE ANCHORED AND FOR ALL HINGED DOORS, USE THE RECTANGULAR LOADING TABLES, (TABLE 2A).

ALLOWABLE SCREW PATTERNS

INTO CONCRETE/CMU

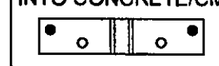

INTO WOOD/STEEL/AL.

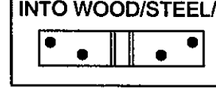

DGT®
1070 TECHNOLOGY DRIVE
N. VENICE, FL 34275
P.O. BOX 1529
NOKOMIS, FL 34274
FL CERT. OF AUTH.# 29296

Title: IMPACT-RESISTANT ALUMINUM TUBE MULLIONS
Description: 1 X 2 X .375 MULL SPECS
Series: N/A
Drawn By: J ROSOWSKI
Rev. By:
Scale: N/A
Date: 12/13/10
Date:
Drawing No. 6262JR
Checked By:
Date:
Revision:
Rev.
Sheet: 6 of 18

Approved as complying with the Florida Building Code
Date May 26, 2011
NOA# 10-0819.05
Miami Dade Product Control
By Ishwar I. Chawla

ANTHONY LYNN MILLER
LICENSE
No. 58705
5/6/11
STATE OF FLORIDA
PROFESSIONAL ENGINEER

A. LYNN MILLER, P.E.
FL P.E.# 58705

1" X 2.750" X .375" TUBE MULLION AND CLIP

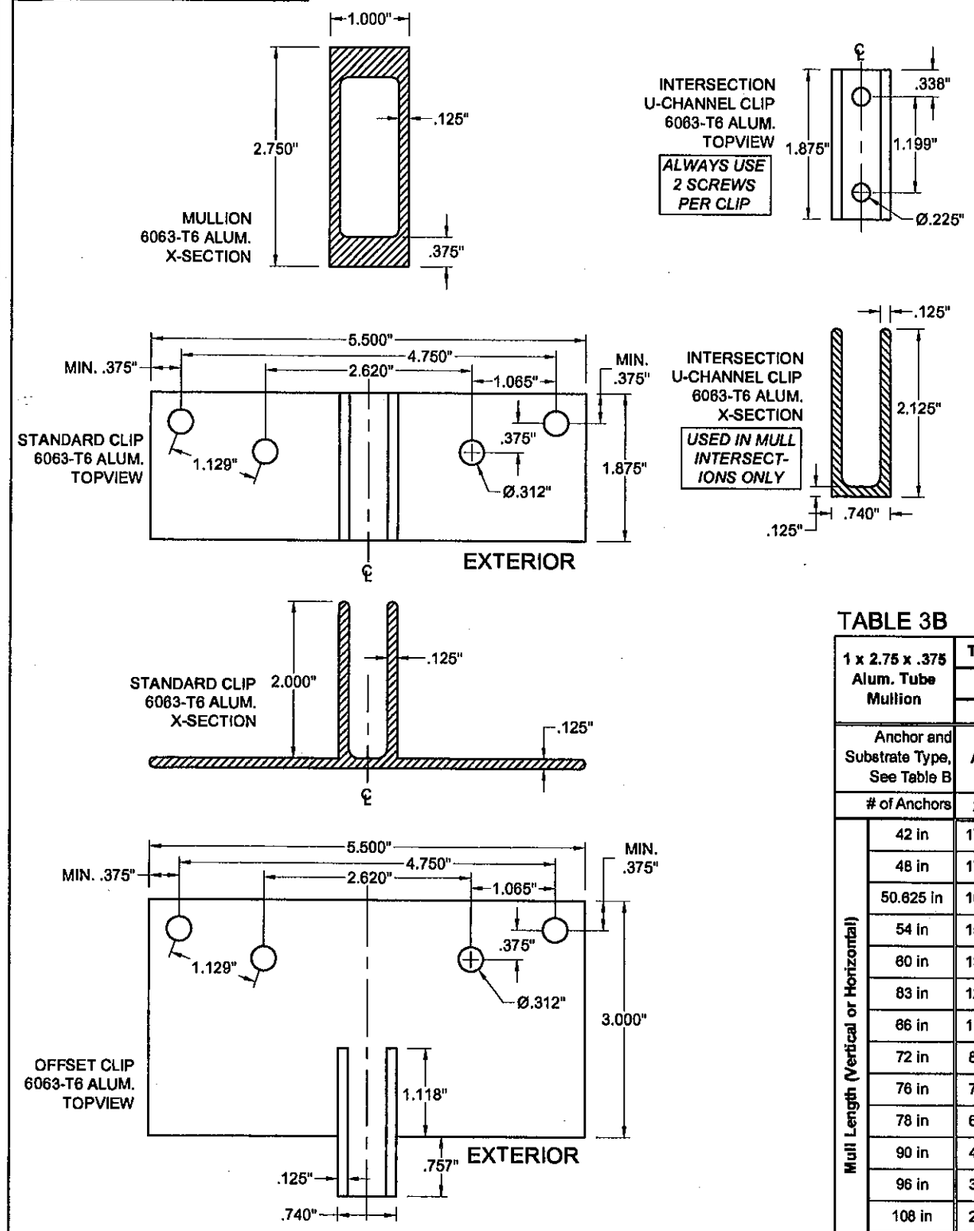

TABLE 3A

1 x 2.75 x .375 Alum. Tube Mullion	Rectangular Loading						Design Pressure (lbs/ft²)																				
	Opening (Vertical or Horizontal)																										
	50 in			60 in			70 in			80 in			90 in			100 in			120 in			140 in			160 in		
Anchor and Substrate Type, See Table B	A	B	C	A	B	C	A	B	C	A	B	C	A	B	C	A	B	C	A	B	C	A	B	C	A	B	C
# of Anchors	2	2	4	2	2	4	2	2	4	2	2	4	2	2	4	2	2	4	2	2	4	2	2	4	2	2	4
Mull Length (Vertical or Horizontal)																											
42 in	119	97	119	109	81	109	99	69	99	89	61	89	79	54	79	71	49	71	60	40	60	51	35	51	45	30	45
48 in	126	85	126	108	71	117	92	61	108	81	53	99	72	47	90	65	42	82	54	35	68	46	30	58	40	27	51
50.625 in	123	81	128	102	67	120	88	58	111	77	50	102	68	45	91	61	40	61	51	34	68	44	29	58	38	25	51
54 in	115	76	131	96	63	123	82	54	109	72	47	95	64	42	85	57	38	76	48	31	63	41	27	54	36	24	47
60 in	103	68	120	86	57	98	74	49	82	65	42	71	57	38	62	52	34	56	43	28	46	37	24	39	32	21	34
63 in	99	65	104	82	54	85	70	46	71	61	40	61	54	36	54	48	32	48	40	27	40	34	23	34	30	20	30
66 in	91	62	91	74	51	74	62	44	62	54	39	54	47	34	47	42	31	42	35	26	35	30	22	30	26	19	26
72 in	71	57	71	58	47	58	49	40	49	42	35	42	37	31	37	33	28	33	27	24	27	23	20	23	20	18	20
76 in	61	54	61	49	45	49	42	38	42	36	34	36	31	30	31	28	27	28	23	22	23	19	19	19	17	17	17
78 in	56	52	56	46	44	46	39	37	39	33	33	33	29	29	29	26	26	26	21	21	21	18	18	18	16	16	16
90 in	37	37	37	30	30	30	26	26	26	22	22	22	19	19	19	17	17	17									
96 in	31	31	31	25	25	25	21	21	21	18	18	18	16	16	16												
108 in	22	22	22	18	18	18	15	15	15																		
111 in	20	20	20	17	17	17																					

NOTE: THE ROW HEADING "# OF ANCHORS" ON THE TABLES REFERS TO THE STANDARD AND OFFSET CLIP ONLY.

TABLE 3B

1 x 2.75 x .375 Alum. Tube Mullion	Triangular/Trapezoidal Loading						Design Pressure (lbs/ft²)																				
	Opening (Vertical or Horizontal)																										
	50 in			60 in			70 in			80 in			90 in			100 in			120 in			140 in			160 in		
Anchor and Substrate Type, See Table B	A	B	C	A	B	C	A	B	C	A	B	C	A	B	C	A	B	C	A	B	C	A	B	C	A	B	C
# of Anchors	2	2	4	2	2	4	2	2	4	2	2	4	2	2	4	2	2	4	2	2	4	2	2	4	2	2	4
Mull Length (Vertical or Horizontal)																											
42 in	170	138	170	170	126	170	170	119	170	170	116	170	170	116	170	170	116	170	170	118	170	170	116	170	170	116	170
48 in	170	115	170	157	103	170	145	96	170	139	91	170	135	89	170	135	89	170	135	89	170	135	89	170	135	69	170
50.625 in	163	107	170	145	95	170	134	88	170	127	83	168	123	81	163	121	80	161	121	80	161	121	80	161	121	80	161
54 in	150	98	170	133	87	170	122	80	161	114	75	152	110	72	145	107	70	141	106	70	140	106	70	140	106	70	140
60 in	131	86	151	115	76	130	104	69	116	97	64	106	92	60	99	89	58	95	86	57	92	86	57	92	86	57	92
63 in	123	81	130	108	71	111	97	64	99	90	59	90	84	56	84	80	54	60	76	51	76	76	51	76	76	51	76
66 in	112	76	112	96	67	96	85	80	85	77	55	77	72	52	72	68	50	68	83	47	63	63	47	63	63	47	63
72 in	86	69	86	73	60	73	84	53	64	56	49	58	53	46	53	50	43	50	48	40	46	44	39	44	44	39	44
76 in	73	64	73	62	56	62	54	50	54	49	46	49	45	42	45	42	40	42	38	37	38	36	36	36	36	35	36
78 in	67	62	67	57	54	57	50	48	50	45	44	45	41	41	41	38	38	38	34	34	34	33	33	33	32	32	32
90 in	43	43	43	36	36	36	32	32	32	28	26	28	26	26	26	24	24	24	21	21	21	19	19	19	18	18	18
96 in	35	35	35	30	30	30	26	26	26	23	23	23	21	21	21	19	19	19	17	17	17	15	15	15	15	15	15
108 in	25	25	25	21	21	21	18	18	18	16	16	16															
111 in	23	23	23	19	19	19	17	17	17	15	15	15															

TABLE NOTES:

1) LINEAR INTERPOLATION BETWEEN SIZES AND/OR DESIGN PRESSURES IS ALLOWABLE.
2) SCREW PATTERN APPLIES TO BOTH THE STANDARD AND OFFSET CLIP.
3) ALL MULLION CLIPS MAY BE FACTORY MACHINED AND CONTAIN UNUSED HOLES. IF NEEDED, HOLES MAY BE DRILLED IN THE FIELD FOLLOWING DIMENSIONS GIVEN ON THIS SHEET.
4) THE STANDARD AND OFFSET CLIP MAY BE COUNTERSUNK. THE INTERSECTION U-CLIP MAY NOT BE COUNTERSUNK.
5) SEE SHEETS 2-4 FOR GENERAL ANCHOR DESCRIPTIONS AND INSTALLATION METHODS.
6) FOR FENESTRATION PRODUCTS WHERE ALL FOUR SIDES ARE ANCHORED TO THE SUBSTRATE, USE THE TRIANGULAR/TRAPEZOIDAL LOADING TABLES (TABLE 3B). FOR FENESTRATION PRODUCTS WHERE NOT ALL FOUR SIDES ARE ANCHORED AND FOR ALL HINGED DOORS, USE THE RECTANGULAR LOADING TABLES, (TABLE 3A).

◯ USED IN EXAMPLES ON SHEET 18

ALLOWABLE SCREW PATTERNS

INTO CONCRETE/CMU | INTO WOOD/STEEL/AL.

PGT®
1070 TECHNOLOGY DRIVE
N. VENICE, FL 34275
P.O. BOX 1529
NOKOMIS, FL 34274
FL CERT. OF AUTH.# 29296

Title: IMPACT-RESISTANT ALUMINUM TUBE MULLIONS
Description: 1 X 2.75 X .375 MULL SPECS
Series: N/A
Drawing No. 6262JR
Sheet: 7 of 18
Scale: N/A
Date: 12/13/10
Checked By:
Date:
Rev:
Drawn By: J ROSOWSKI
Rev. By:
Revision:

Approved as [illegible]
Florida Product Control
Date May 26, 2011
NOA# 10-0818.05
Miami Dade Product Control
By [illegible]

ANTHONY LYNN MILLER
LICENSE
No. 58705
STATE OF FLORIDA
PROFESSIONAL ENGINEER

A. LYNN MILLER, P.E.
FL P.E.# 58705

1" X 2.750" X .650" TUBE MULLION AND CLIP

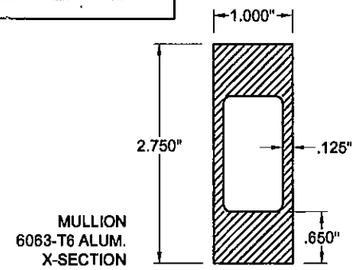

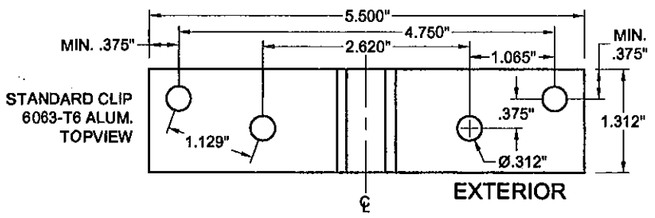

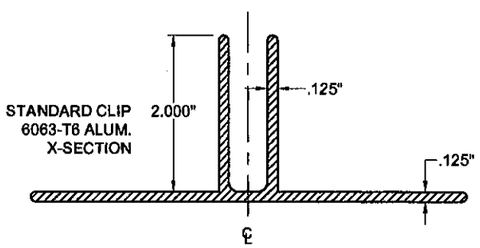

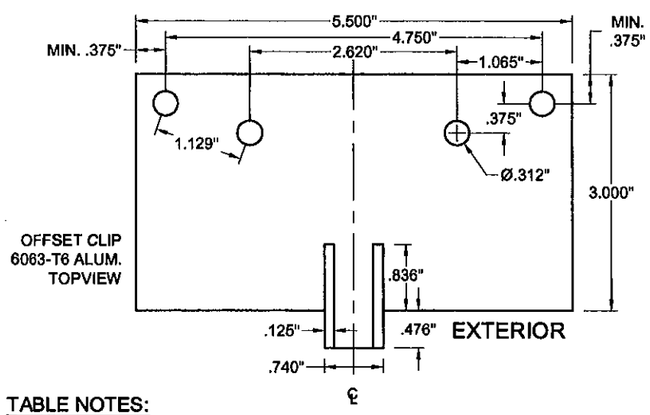

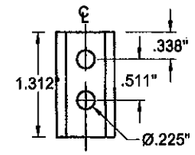

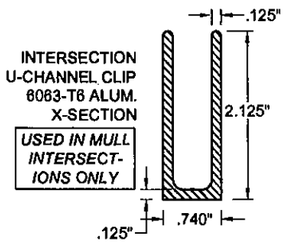

TABLE 4A

1 x 2.75 x .650 Alum. Tube Mullion	Rectangular Loading						Design Pressure (lbs/ft²)																				
	Opening (Vertical or Horizontal)																										
	50 in			60 in			70 in			80 in			90 in			100 in			120 in			140 in			160 in		
Anchor and Substrate Type, See Table B	A	B	C	A	B	C	A	B	C	A	B	C	A	B	C	A	B	C	A	B	C	A	B	C	A	B	C
# of Anchors	2	2	4	2	2	4	2	2	4	2	2	4	2	2	4	2	2	4	2	2	4	2	2	4	2	2	4
Mull Length (Vertical or Horizontal)																											
42 in	119	97	119	109	81	109	99	69	99	89	61	89	79	54	79	71	49	71	60	40	60	51	35	51	45	30	45
48 in	126	85	126	108	71	117	92	61	108	81	53	99	72	47	90	65	42	82	54	35	68	46	30	58	40	27	51
50.625 in	123	81	128	102	87	120	86	56	111	77	50	102	68	45	91	61	40	81	51	34	68	44	29	58	38	25	51
54 in	115	76	131	96	83	123	82	54	109	72	47	95	64	42	85	57	38	76	48	31	64	41	27	55	36	24	48
60 in	103	68	135	86	57	115	74	49	98	65	42	86	57	38	76	52	34	69	43	28	57	37	24	49	32	21	43
63 in	99	65	130	82	54	106	70	46	89	62	40	77	55	36	67	49	32	60	41	27	49	35	23	42	31	20	37
66 in	94	62	114	78	51	93	67	44	76	59	39	67	52	34	59	47	31	52	39	26	43	34	22	37	29	19	32
72 in	88	57	88	72	47	72	61	40	61	52	35	52	46	31	46	41	28	41	33	24	33	28	20	28	25	18	25
76 in	76	54	76	62	45	62	52	36	52	45	34	45	39	30	39	35	27	35	28	22	28	24	19	24	21	17	21
78 in	70	52	70	57	44	57	46	37	46	41	33	41	36	29	36	32	26	32	26	22	26	22	19	22	20	16	20
90 in	46	45	46	36	38	38	32	32	32	27	27	27	24	24	24	21	21	21	17	17	17	15	15	15			
96 in	38	38	38	31	31	31	26	26	26	23	23	23	20	20	20	18	18	18									
108 in	27	27	27	22	22	22	19	19	19	16	16	16															
111 in	25	25	25	21	21	21	17	17	17	15	15	15															
120 in	20	20	20	16	16	16																					

NOTE: THE ROW HEADING "# OF ANCHORS" ON THE TABLES REFERS TO THE STANDARD AND OFFSET CLIP ONLY.

TABLE 4B

1 x 2.75 x .650 Alum. Tube Mullion	Triangular/Trapezoidal Loading						Design Pressure (lbs/ft²)																				
	Opening (Vertical or Horizontal)																										
	50 in			60 in			70 in			80 in			90 in			100 in			120 in			140 in			160 in		
Anchor and Substrate Type, See Table B	A	B	C	A	B	C	A	B	C	A	B	C	A	B	C	A	B	C	A	B	C	A	B	C	A	B	C
# of Anchors	2	2	4	2	2	4	2	2	4	2	2	4	2	2	4	2	2	4	2	2	4	2	2	4	2	2	4
Mull Length (Vertical or Horizontal)																											
42 in	170	138	170	170	128	170	170	119	170	170	116	170	170	116	170	170	116	170	170	116	170	170	116	170	170	116	170
48 in	170	115	170	157	103	170	145	96	170	139	91	170	135	89	170	135	89	170	135	89	170	135	89	170	135	89	170
50.625 in	163	107	170	145	95	170	134	88	170	127	83	168	123	81	163	121	80	161	121	80	161	121	80	161	121	80	161
54 in	150	98	170	133	87	170	122	80	161	114	75	152	110	72	146	107	70	142	106	70	141	106	70	141	106	70	141
60 in	131	86	170	115	76	153	104	69	139	97	64	129	92	60	122	89	58	118	86	57	114	86	57	114	86	57	114
63 in	123	81	162	108	71	139	97	64	123	90	59	112	85	56	105	82	54	99	78	51	94	78	51	94	78	51	94
66 in	116	76	140	101	67	120	91	60	106	84	55	96	79	52	89	76	50	84	72	47	79	71	47	78	71	47	78
72 in	104	69	107	91	60	91	80	53	80	72	49	72	66	46	66	62	43	62	57	40	57	55	39	55	55	39	55
76 in	90	64	90	77	56	77	67	50	67	61	46	61	56	42	56	52	40	52	47	37	47	45	36	45	44	35	44
78 in	83	62	83	71	54	71	62	48	62	58	44	58	51	41	51	47	38	47	43	35	43	41	34	41	40	34	40
90 in	54	53	54	45	45	45	40	40	40	35	35	35	32	32	32	30	30	30	26	26	26	24	24	24	23	23	23
96 in	44	44	44	37	37	37	32	32	32	29	29	29	26	26	26	24	24	24	21	21	21	19	19	19	18	18	18
108 in	31	31	31	26	26	26	22	22	22	20	20	20	18	18	18	16	16	16									
111 in	28	28	28	24	24	24	21	21	21	18	18	18	16	16	16	15	15	15									
120 in	22	22	22	19	19	19	16	16	18																		

USED IN EXAMPLES ON SHEET 18

TABLE NOTES:

1) LINEAR INTERPOLATION BETWEEN SIZES AND/OR DESIGN PRESSURES IS ALLOWABLE.
2) SCREW PATTERN APPLIES TO BOTH THE STANDARD AND OFFSET CLIP.
3) ALL MULLION CLIPS MAY BE FACTORY MACHINED AND CONTAIN UNUSED HOLES. IF NEEDED, HOLES MAY BE DRILLED IN THE FIELD FOLLOWING DIMENSIONS GIVEN ON THIS SHEET.
4) THE STANDARD AND OFFSET CLIP MAY BE COUNTERSUNK. THE INTERSECTION U-CLIP MAY NOT BE COUNTERSUNK.
5) SEE SHEETS 2-4 FOR GENERAL ANCHOR DESCRIPTIONS AND INSTALLATION METHODS.
6) FOR FENESTRATION PRODUCTS WHERE ALL FOUR SIDES ARE ANCHORED TO THE SUBSTRATE, USE THE TRIANGULAR/TRAPEZOIDAL LOADING TABLES (TABLE 4B). FOR FENESTRATION PRODUCTS WHERE NOT ALL FOUR SIDES ARE ANCHORED AND FOR ALL HINGED DOORS, USE THE RECTANGULAR LOADING TABLES, (TABLE 4A).

ALLOWABLE SCREW PATTERNS

INTO CONCRETE/CMU | INTO WOOD/STEEL/AL.

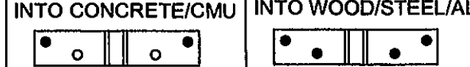

PGT®
1070 TECHNOLOGY DRIVE
N. VENICE, FL 34275
P.O. BOX 1529
NOKOMIS, FL 34274
FL CERT. OF AUTH.# 29296

Title: IMPACT-RESISTANT ALUMINUM TUBE MULLIONS
Description: 1 X 2.75 X .650 MULL SPECS
Drawing No.: 6262JR
Sheet: 8 of 18
Rev.:
Date:
Checked By:
Revision:
Scale: N/A
Date: 12/13/10
Date:
Drawn By: J ROSOWSKI
Rev. By:

Approved as [illegible]
Florida Building [illegible]
Date May 26, 2011
NOA# 10-0819.05
Miami Dade Product Control
By [signature]

ANTHONY LYNN MILLER
LICENSE
No. 58705
STATE OF FLORIDA
PROFESSIONAL ENGINEER

A. LYNN MILLER, P.E.
FL P.E.# 58705

1" X 3.125" X .500" TUBE MULLION AND CLIP

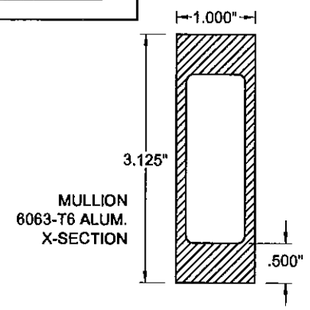

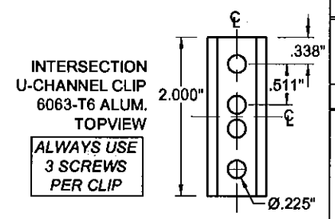

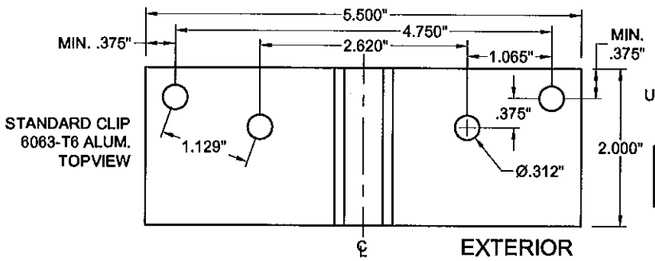

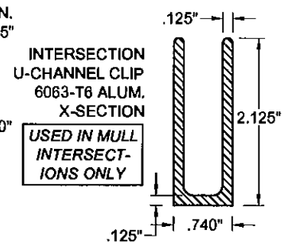

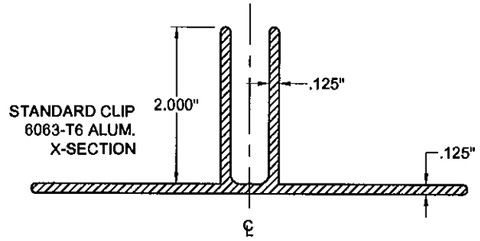

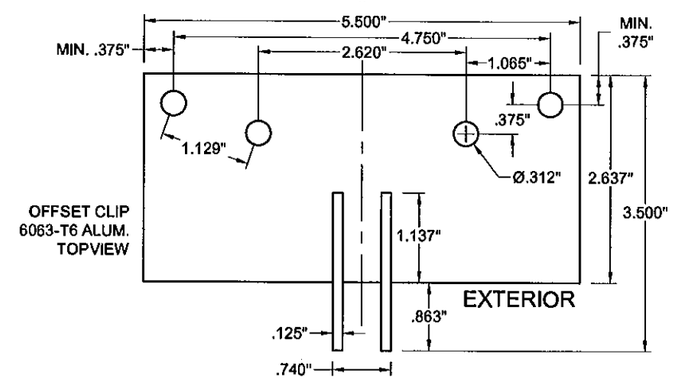

TABLE 5A

1" x 3.125" x .500" Alum Tube Mull	Rectangular Loading						Design Pressure (lbs/ft²)																				
	Opening (Vertical or Horizontal)																										
	50 in			60 in			70 in			80 in			90 in			100 in			120 in			140 in			160 in		
Anchor and Substrate Type, See Table B	A	B	C	A	B	C	A	B	C	A	B	C	A	B	C	A	B	C	A	B	C	A	B	C	A	B	C
# of Anchors	2	2	4	2	2	4	2	2	4	2	2	4	2	2	4	2	2	4	2	2	4	2	2	4	2	2	4
Mull Length (Vertical or Horizontal)																											
42 in	119	97	119	109	81	109	99	69	99	89	61	89	79	54	79	71	49	71	60	40	60	51	35	51	45	30	45
48 in	126	85	126	108	71	117	92	61	108	81	53	99	72	47	90	65	42	82	54	35	68	46	30	58	40	27	51
50.625 in	123	81	128	102	67	120	86	58	111	77	50	103	68	45	94	61	40	86	51	34	72	44	29	61	38	25	54
54 in	115	76	131	96	63	123	82	54	115	72	47	107	64	42	95	57	38	86	48	31	71	41	27	61	36	24	54
60 in	103	68	135	86	57	128	74	49	110	65	42	98	57	38	86	52	34	77	43	28	64	37	24	55	32	21	48
63 in	99	65	138	82	54	123	70	46	105	62	40	92	55	36	82	49	32	74	41	27	61	35	23	53	31	20	46
66 in	94	62	138	78	51	117	67	44	98	59	39	85	52	34	74	47	31	66	39	26	54	34	22	47	29	19	41
72 in	86	57	112	72	47	91	62	40	77	54	35	66	48	31	58	43	28	51	36	24	42	31	20	36	27	18	31
76 in	82	54	95	68	45	78	58	38	66	51	34	56	45	30	49	41	27	44	34	22	36	29	19	31	26	17	27
78 in	80	52	88	66	44	72	57	37	61	50	33	52	44	29	46	40	26	41	33	22	33	28	19	28	25	16	25
90 in	58	45	58	46	38	48	40	32	40	35	28	35	30	25	30	27	23	27	22	19	22	19	16	19	16		16
96 in	46	42	48	40	35	40	33	30	33	29	27	29	25	24	25	22	21	22	18	16	18	15	15	15			
108 in	34	34	34	26	28	28	24	24	24	21	21	21	18	16	16	16	16	16									
111 in	32	32	32	26	26	26	22	22	22	19	19	19	17	17	17	15	15	15									
120 in	25	25	25	21	21	21	18	18	18	15	15	15															

NOTE: THE ROW HEADING "# OF ANCHORS" ON THE TABLES REFERS TO THE STANDARD AND OFFSET CLIP ONLY.

TABLE 5B

1" x 3.125" x .500" Alum Tube Mull	Triangular/Trapezoidal Loading						Design Pressure (lbs/ft²)																				
	Opening (Vertical or Horizontal)																										
	50 in			60 in			70 in			80 in			90 in			100 in			120 in			140 in			160 in		
Anchor and Substrate Type, See Table B	A	B	C	A	B	C	A	B	C	A	B	C	A	B	C	A	B	C	A	B	C	A	B	C	A	B	C
# of Anchors	2	2	4	2	2	4	2	2	4	2	2	4	2	2	4	2	2	4	2	2	4	2	2	4	2	2	4
Mull Length (Vertical or Horizontal)																											
42 in	170	138	170	170	128	170	170	119	170	170	116	170	170	116	170	170	116	170	170	116	170	170	116	170	170	116	170
48 in	170	115	170	157	103	170	145	96	170	139	91	170	135	89	170	135	89	170	135	89	170	135	89	170	135	89	170
50.625 in	163	107	170	145	95	170	134	88	170	127	83	170	123	81	170	121	80	170	121	80	170	121	80	170	121	80	170
54 in	150	98	170	133	87	170	122	80	170	114	75	170	110	72	163	107	70	160	106	70	159	106	70	159	108	70	159
60 in	131	86	170	115	76	170	104	69	156	97	64	145	92	60	137	89	58	132	86	57	129	86	57	129	86	57	129
63 in	123	81	170	108	71	161	97	64	145	90	59	135	85	56	127	82	54	122	78	51	117	78	51	117	78	51	117
66 in	116	76	170	101	67	151	91	60	134	84	55	121	79	52	113	76	50	106	72	47	100	71	47	99	71	47	99
72 in	104	69	135	91	60	115	81	53	101	75	49	91	70	46	84	66	43	79	62	40	72	60	39	70	60	39	70
76 in	98	64	114	85	56	97	76	50	85	69	46	77	64	42	70	61	40	65	56	37	59	54	36	57	54	35	56
78 in	95	62	105	82	54	89	73	48	78	67	44	70	62	41	64	59	38	60	54	35	54	51	34	51	51	34	51
90 in	68	53	68	57	45	57	50	40	50	45	36	45	40	34	40	37	31	37	33	28	33	30	26	30	29	25	29
96 in	56	49	56	47	42	47	41	37	41	36	34	36	33	31	33	30	29	30	27	26	27	24	24	24	23	23	23
108 in	39	39	39	33	33	33	28	28	28	25	25	25	23	23	23	21	21	21	18	18	18	18	16	16	15	15	15
111 in	36	36	36	30	30	30	26	26	26	23	23	23	21	21	21	19	19	19	16	16	16	15	15	15			
120 in	28	28	28	24	24	24	21	21	21	18	18	18	16	16	16	15	15	15									

TABLE NOTES:

1) LINEAR INTERPOLATION BETWEEN SIZES AND/OR DESIGN PRESSURES IS ALLOWABLE.
2) SCREW PATTERN APPLIES TO BOTH THE STANDARD AND OFFSET CLIP.
3) ALL MULLION CLIPS MAY BE FACTORY MACHINED AND CONTAIN UNUSED HOLES. IF NEEDED, HOLES MAY BE DRILLED IN THE FIELD FOLLOWING DIMENSIONS GIVEN ON THIS SHEET.
4) THE STANDARD AND OFFSET CLIP MAY BE COUNTERSUNK. THE INTERSECTION U-CLIP MAY NOT BE COUNTERSUNK.
5) SEE SHEETS 2-4 FOR GENERAL ANCHOR DESCRIPTIONS AND INSTALLATION METHODS.
6) FOR FENESTRATION PRODUCTS WHERE ALL FOUR SIDES ARE ANCHORED TO THE SUBSTRATE, USE THE TRIANGULAR/TRAPEZOIDAL LOADING TABLES (TABLE 5B). FOR FENESTRATION PRODUCTS WHERE NOT ALL FOUR SIDES ARE ANCHORED AND FOR ALL HINGED DOORS, USE THE RECTANGULAR LOADING TABLES, (TABLE 5A).

ALLOWABLE SCREW PATTERNS

INTO CONCRETE/CMU	INTO WOOD/STEEL/AL.

PGT®
1070 TECHNOLOGY DRIVE
N. VENICE, FL 34275
P.O. BOX 1529
NOKOMIS, FL 34274
FL CERT. OF AUTH.# 29296

Title: IMPACT-RESISTANT ALUMINUM TUBE MULLIONS
Description: 1 X 3.125 X .500 MULL SPECS
Series: N/A
Drawing No. 6262JR
Sheet: 9 of 18
Rev:
Scale: N/A
Date: 12/13/10
Checked By: J ROSOWSKI
Date:
Revision:
Drawn By:
Rev. By:
Date:

Approved as complying with the Florida Building Code
Date May 26, 2011
NOA# 10-0819.05
Miami Dade Product Control
By Ishas L. Chandra

ANTHONY LYNN MILLER
LICENSE
No. 58705
5/6/11
STATE OF FLORIDA
PROFESSIONAL ENGINEER

A. LYNN MILLER, P.E.
FL P.E.# 58705

1.25" X 3.188" X .265" TUBE MULLION AND CLIP

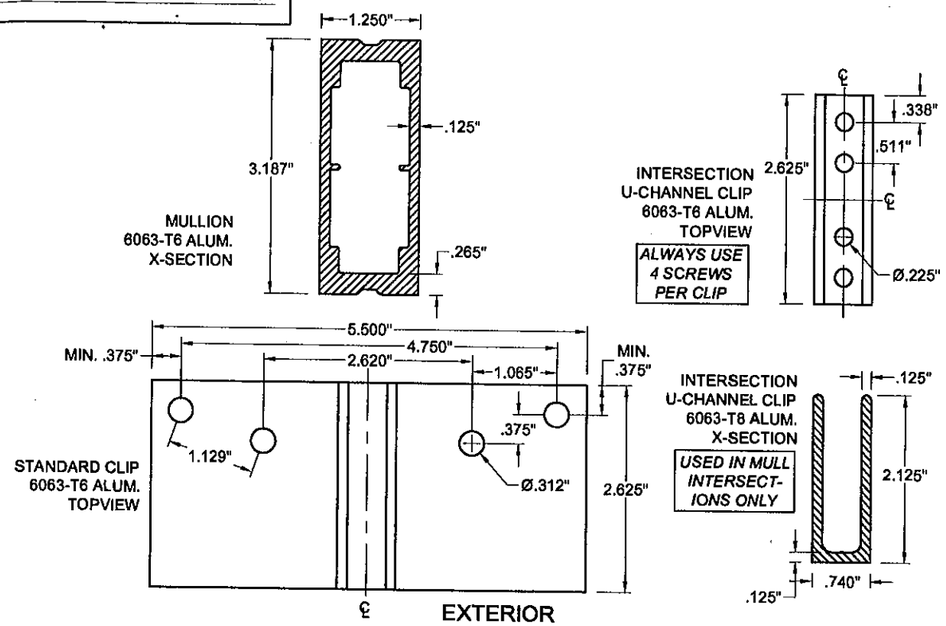

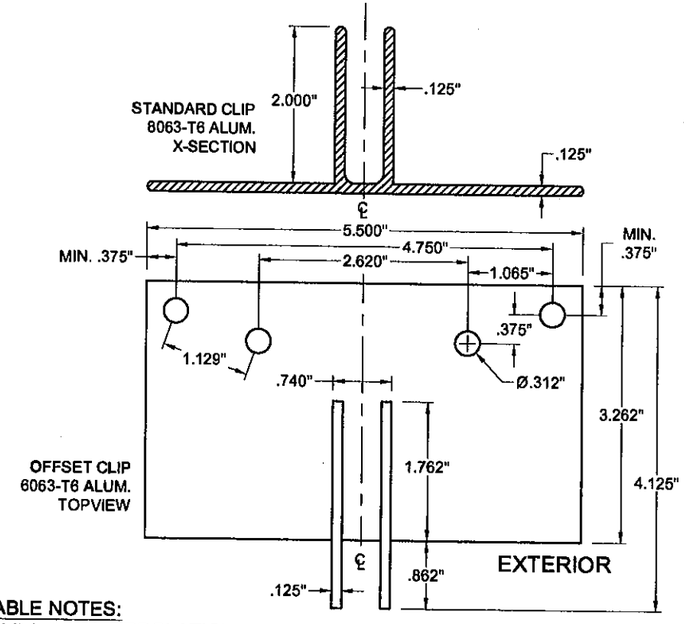

TABLE 6A

1.25" x 3.188" x .265" Alum Tube Mull	Rectangular Loading																										
	Design Pressure (lbs/ft²)																										
	Opening (Vertical or Horizontal)																										
	50 in			60 in			70 in			80 in			90 in			100 in			120 in			140 in			160 in		
Anchor and Substrate Type, See Table B	A	B	C	A	B	C	A	B	C	A	B	C	A	B	C	A	B	C	A	B	C	A	B	C	A	B	C
# of Anchors	2	2	4	2	2	4	2	2	4	2	2	4	2	2	4	2	2	4	2	2	4	2	2	4	2	2	4
Mull Length (Vertical or Horizontal)																											
42 in	119	97	119	109	81	109	99	69	99	89	61	89	79	54	79	71	49	71	60	40	60	51	35	51	45	30	45
48 in	126	85	126	108	71	117	92	61	108	81	53	99	72	47	90	65	42	82	54	35	88	46	30	58	40	27	51
50.825 in	123	81	128	102	67	120	88	58	111	77	50	103	68	45	94	61	40	88	51	34	72	44	29	61	38	25	54
54 in	115	76	131	96	63	123	82	54	115	72	47	107	64	42	95	57	38	86	48	31	71	41	27	61	38	24	54
60 in	103	68	135	86	57	128	74	49	110	65	42	96	57	38	86	52	34	77	43	28	64	37	24	55	32	21	48
63 in	99	65	138	82	54	123	70	46	105	82	40	92	55	36	82	49	32	74	41	27	61	35	23	53	31	20	46
66 in	94	62	138	78	51	117	67	44	98	59	39	85	52	34	74	47	31	66	39	26	55	34	22	47	29	19	41
72 in	86	57	112	72	47	91	82	40	77	54	35	66	48	31	58	43	28	51	36	24	42	31	20	36	27	18	31
76 in	82	54	96	68	45	78	58	38	66	51	34	56	45	30	49	41	27	44	34	22	36	29	19	31	26	17	27
78 in	80	52	89	88	44	72	57	37	61	50	33	52	44	29	46	40	26	41	33	22	33	28	19	28	25	16	25
90 in	59	45	59	48	38	48	40	32	40	35	28	35	30	25	30	27	23	27	22	19	22	19	16	19			
96 in	49	42	49	40	35	40	33	30	33	29	27	29	25	24	25	22	21	22	18	18	18	15	15	15			
108 in	34	34	34	28	28	28	24	24	24	21	21	21	18	18	18	16	16	16									
111 in	32	32	32	28	26	26	22	22	22	19	19	19	17	17	17	15	15	15									
120 in	25	25	25	21	21	21	18	18	18	15	15	15															

TABLE 6B

1.25" x 3.188" x .265" Alum Tube Mull	Triangular/Trapezoidal Loading																										
	Design Pressure (lbs/ft²)																										
	Opening (Vertical or Horizontal)																										
	50 in			60 in			70 in			80 in			90 in			100 in			120 in			140 in			160 in		
Anchor and Substrate Type, See Table B	A	B	C	A	B	C	A	B	C	A	B	C	A	B	C	A	B	C	A	B	C	A	B	C	A	B	C
# of Anchors	2	2	4	2	2	4	2	2	4	2	2	4	2	2	4	2	2	4	2	2	4	2	2	4	2	2	4
Mull Length (Vertical or Horizontal)																											
42 in	170	138	170	170	126	170	170	119	170	170	116	170	170	116	170	170	116	170	170	116	170	170	116	170	170	116	170
48 in	170	115	170	157	103	170	145	96	170	139	91	170	135	89	170	135	89	170	135	89	170	135	89	170	135	89	170
50.625 in	163	107	170	145	95	170	134	88	170	127	83	170	123	61	170	121	80	170	121	80	170	121	80	170	121	80	170
54 in	150	98	170	133	87	170	122	80	170	114	75	170	110	72	163	107	70	160	106	70	159	106	70	159	106	70	159
60 in	131	86	170	115	76	170	104	69	156	97	64	145	92	60	137	89	58	132	86	57	129	86	57	129	86	57	129
63 in	123	81	170	108	71	161	97	64	145	90	69	135	85	56	127	82	54	122	78	51	117	78	51	117	76	51	117
66 in	116	76	170	101	67	151	91	60	134	84	55	122	79	52	113	76	50	107	72	47	100	71	47	99	71	47	99
72 in	104	69	135	91	60	115	81	53	101	75	49	91	70	46	64	66	43	79	62	40	72	60	39	70	60	39	70
76 in	98	64	114	85	56	97	76	50	85	69	46	77	64	42	70	61	40	66	56	37	60	54	36	57	54	35	56
76 in	95	62	106	82	54	90	73	46	79	67	44	70	62	41	65	59	38	60	54	35	54	51	34	51	51	34	51
90 in	66	53	68	57	45	57	50	40	50	45	36	45	41	34	41	37	31	37	33	28	33	30	26	30	29	25	29
96 in	56	49	56	47	42	47	41	37	41	36	34	36	33	31	33	30	29	30	27	26	27	24	24	24	23	23	23
108 in	39	39	39	33	33	33	28	28	28	25	25	25	23	23	23	21	21	21	18	18	18	16	16	16	15	15	15
111 in	36	36	36	30	30	30	26	26	26	23	23	23	21	21	21	19	19	19	17	17	17	15	15	15			
120 in	28	28	28	24	24	24	21	21	21	18	18	18	16	16	16	15	15	15									

TABLE NOTES:

1) LINEAR INTERPOLATION BETWEEN SIZES AND/OR DESIGN PRESSURES IS ALLOWABLE.
2) SCREW PATTERN APPLIES TO BOTH THE STANDARD AND OFFSET CLIP.
3) ALL MULLION CLIPS MAY BE FACTORY MACHINED AND CONTAIN UNUSED HOLES. IF NEEDED, HOLES MAY BE DRILLED IN THE FIELD FOLLOWING DIMENSIONS GIVEN ON THIS SHEET.
4) THE STANDARD AND OFFSET CLIP MAY BE COUNTERSUNK. THE INTERSECTION U-CLIP MAY NOT BE COUNTERSUNK.
5) SEE SHEETS 2-4 FOR GENERAL ANCHOR DESCRIPTIONS AND INSTALLATION METHODS.
6) FOR FENESTRATION PRODUCTS WHERE ALL FOUR SIDES ARE ANCHORED TO THE SUBSTRATE, USE THE TRIANGULAR/TRAPEZOIDAL LOADING TABLES (TABLE 6B). FOR FENESTRATION PRODUCTS WHERE NOT ALL FOUR SIDES ARE ANCHORED AND FOR ALL HINGED DOORS, USE THE RECTANGULAR LOADING TABLES, (TABLE 6A).

ALLOWABLE SCREW PATTERNS

INTO CONCRETE/CMU	INTO WOOD/STEEL/AL.
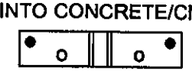	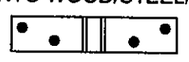

PGT®
1070 TECHNOLOGY DRIVE
N. VENICE, FL 34275
P.O. BOX 1529
NOKOMIS, FL 34274
FL CERT. OF AUTH.# 29296

Title: IMPACT-RESISTANT ALUMINUM TUBE MULLIONS
Description: 1.25 X 3.188 X .265 MULL SPECS
Series: N/A
Drawing No. 6262JR
Sheet: 10 of 18
Rev:
Scale: N/A
Date: 12/13/10
Checked By:
Date:
Revision:
Drawn By: J ROSOWSKI
Rev. By:
Date:

Approved as [illegible] the Florida Building Code
Date May 26, 2011
NOA# 10-0819.05
Miami Dade Product Control
By [illegible]

ANTHONY LYNN MILLER
LICENSE
No. 58705
STATE OF FLORIDA
PROFESSIONAL ENGINEER

A. LYNN MILLER, P.E.
FL P.E.# 58705

1" X 4" X .125" TUBE MULLION AND CLIP

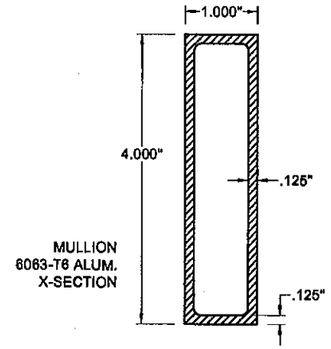

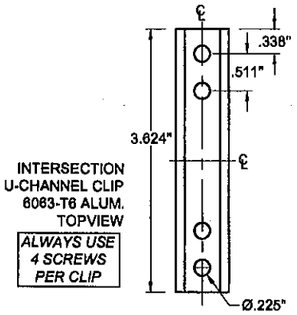

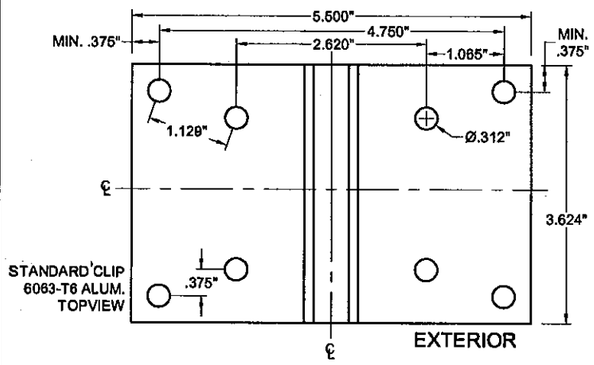

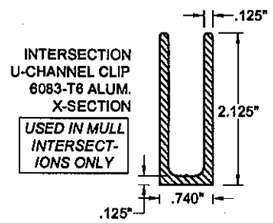

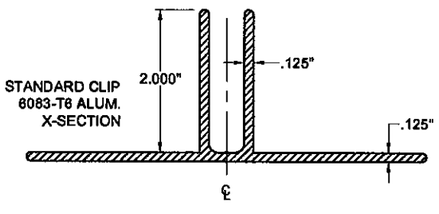

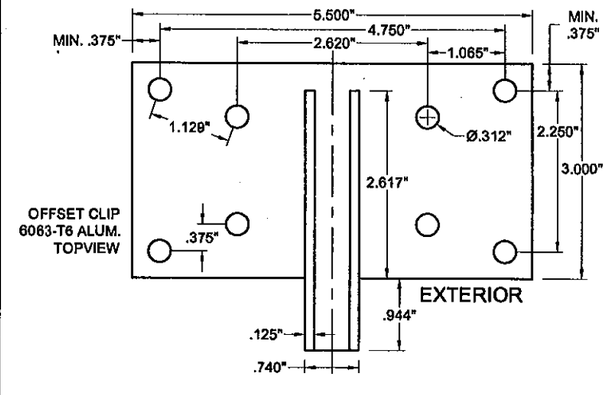

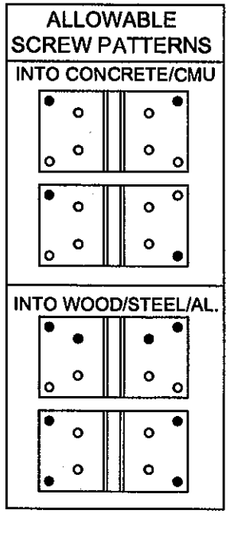

TABLE 7A

1 x 4 x .125 Alum. Tube Mullion	Rectangular Loading																													
	Design Pressure (lbs/ft²)																													
	Opening (Vertical or Horizontal)																													
	50 in			60 in			70 in			80 in			90 in			100 in			120 in			140 in			160 in					
Anchor and Substrate Type, See Table B	A	B	C	A	B	C	A	B	C	A	B	C	A	B	C	A	B	C	A	B	C	A	B	C	A	B	C	A	B	C
# of Anchors	2	2	4	2	2	4	2	2	4	2	2	4	2	2	4	2	2	4	2	2	4	2	2	4	2	2	4	2	2	4
Mull Length (Vertical or Horizontal) 42 in	119	97	119	109	81	109	99	69	99	89	61	89	79	54	79	71	49	71	60	40	60	51	35	51	45	30	45			
48 in	128	85	126	108	71	117	92	61	108	81	53	99	72	47	90	65	42	82	54	35	68	46	30	58	40	27	51			
50.625 in	123	81	128	102	67	120	88	58	111	77	50	103	68	45	94	61	40	86	51	34	72	44	29	61	38	25	54			
54 in	115	76	131	96	63	123	82	54	115	72	47	107	64	42	95	57	38	86	48	31	71	41	27	61	36	24	54			
60 in	103	68	135	86	57	128	74	49	110	65	42	96	57	38	85	52	34	76	43	28	63	37	24	54	32	21	47			
63 in	99	65	136	82	54	123	70	46	104	62	40	89	55	38	76	49	32	69	41	27	57	35	23	49	31	20	43			
66 in	94	62	138	78	51	114	67	44	96	59	39	82	52	34	72	47	31	63	39	26	52	34	22	44	29	19	39			
72 in	86	57	118	72	47	98	62	40	81	54	35	70	48	31	61	43	28	54	38	24	44	31	20	37	27	18	33			
76 in	82	54	101	68	45	82	58	38	69	51	34	60	45	30	52	41	27	46	34	22	38	29	19	32	26	17	28			
78 in	80	52	94	68	44	76	57	37	64	50	33	55	44	29	48	40	26	43	33	22	35	28	19	30	25	16	26			
90 in	62	45	82	51	38	51	43	32	43	37	28	37	32	25	32	29	23	29	23	19	23	20	16	20	17		17			
96 in	51	42	51	42	35	42	35	30	35	30	27	30	27	24	27	24	21	24	19	16	19	18	15	16						
108 in	38	36	36	30	30	30	25	25	25	22	22	22	19	19	19	17	17	17												
111 in	34	34	34	28	28	28	23	23	23	20	20	20	18	18	18	16	16	18												
120 in	27	27	27	22	22	22	19	19	19	18	18	18																		

TABLE 7B

1 x 4 x .125 Alum. Tube Mullion	Triangular/Trapezoidal Loading																													
	Design Pressure (lbs/ft²)																													
	Opening (Vertical or Horizontal)																													
	50 in			60 in			70 in			80 in			90 in			100 in			120 in			140 in			160 in					
Anchor and Substrate Type, See Table B	A	B	C	A	B	C	A	B	C	A	B	C	A	B	C	A	B	C	A	B	C	A	B	C	A	B	C	A	B	C
# of Anchors	2	2	4	2	2	4	2	2	4	2	2	4	2	2	4	2	2	4	2	2	4	2	2	4	2	2	4			
Mull Length (Vertical or Horizontal) 42 in	170	138	170	170	126	170	170	119	170	170	116	170	170	116	170	170	116	170	170	116	170	170	116	170	170	116	170			
48 in	170	115	170	157	103	170	145	96	170	139	91	170	135	89	170	135	89	170	135	89	170	135	89	170	135	89	170			
50.625 in	163	107	170	145	95	170	134	88	170	127	83	170	123	81	170	121	80	170	121	80	170	121	80	170	121	80	170			
54 in	150	98	170	133	87	170	122	80	170	114	75	170	110	72	163	107	70	160	106	70	159	106	70	159	106	70	159			
60 in	131	86	170	115	78	170	104	69	156	97	64	145	92	60	137	89	58	130	86	57	125	86	57	125	86	57	125			
63 in	123	81	170	108	71	161	97	64	144	90	59	131	85	56	121	82	54	115	78	51	108	78	51	108	78	51	108			
66 in	116	76	170	101	67	148	91	60	130	84	55	118	79	52	109	76	50	102	72	47	95	71	47	94	71	47	94			
72 in	104	69	143	91	60	122	81	53	107	75	49	98	70	46	89	66	43	83	62	40	75	60	39	72	60	39	72			
76 in	98	64	121	85	56	103	76	50	90	89	48	81	64	42	74	61	40	69	58	37	63	54	36	50	54	35	59			
78 in	95	62	111	82	54	95	73	48	83	67	44	74	62	41	68	59	38	63	54	35	57	52	34	54	51	34	54			
90 in	72	53	72	61	45	61	53	40	53	47	36	47	43	34	43	39	31	39	35	28	35	32	26	32	31	25	31			
96 in	59	49	59	50	42	50	43	37	43	38	34	38	35	31	35	32	29	32	28	26	28	28	24	26	24	23	24			
108 in	41	41	41	35	35	35	30	30	30	27	27	27	24	24	24	22	22	22	19	19	19	17	17	17	16	16	16			
111 in	38	36	38	32	32	32	28	28	28	24	24	24	22	22	22	20	20	20	17	17	17	16	16	16						
120 in	30	30	30	25	25	25	22	22	22	19	19	19	17	17	17	16	16	16												

TABLE NOTES:

1) LINEAR INTERPOLATION BETWEEN SIZES AND/OR DESIGN PRESSURES IS ALLOWABLE.
2) SCREW PATTERN APPLIES TO BOTH THE STANDARD AND OFFSET CLIP.
3) ALL MULLION CLIPS MAY BE FACTORY MACHINED AND CONTAIN UNUSED HOLES. IF NEEDED, HOLES MAY BE DRILLED IN THE FIELD FOLLOWING DIMENSIONS GIVEN ON THIS SHEET.
4) THE STANDARD AND OFFSET CLIP MAY BE COUNTERSUNK. THE INTERSECTION U-CLIP MAY NOT BE COUNTERSUNK.
5) SEE SHEETS 2-4 FOR GENERAL ANCHOR DESCRIPTIONS AND INSTALLATION METHODS.
6) FOR FENESTRATION PRODUCTS WHERE ALL FOUR SIDES ARE ANCHORED TO THE SUBSTRATE, USE THE TRIANGULAR/TRAPEZOIDAL LOADING TABLES (TABLE 7B). FOR FENESTRATION PRODUCTS WHERE NOT ALL FOUR SIDES ARE ANCHORED AND FOR ALL HINGED DOORS, USE THE RECTANGULAR LOADING TABLES, (TABLE 7A).

1070 TECHNOLOGY DRIVE
N. VENICE, FL 34275
P.O. BOX 1529
NOKOMIS, FL 34274
FL CERT. OF AUTH.# 29296

Title: IMPACT-RESISTANT ALUMINUM TUBE MULLIONS
Description: 1 X 4 X .125 MULL SPECS
Series: N/A
Drawn By: J ROSOWSKI
Date: 12/13/10
Rev. By:
Date:
Scale: N/A
Drawing No. 6262JR
Checked By:
Date:
Revision:
Sheet: 11 of 18
Rev:

Approved [illegible] with the Florida Building Code
Date May 26, 2011
NOA# 10-0819.03
Miami Dade Product Control
By Ishaq I. Chunda

ANTHONY LYNN MILLER
LICENSE
No. 58705
STATE OF FLORIDA
PROFESSIONAL ENGINEER

A. LYNN MILLER, P.E.
FL P.E.# 58705

1" X 4" X .375" TUBE MULLION AND CLIP

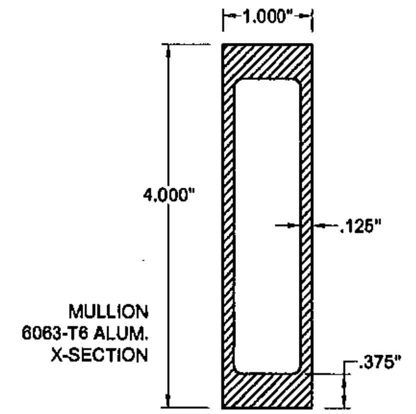

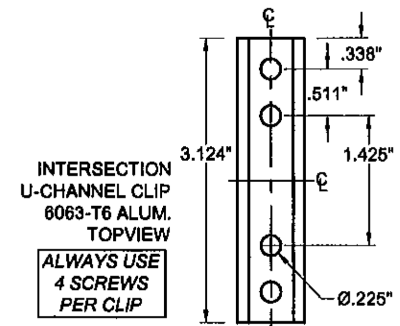

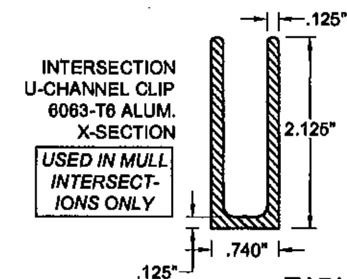

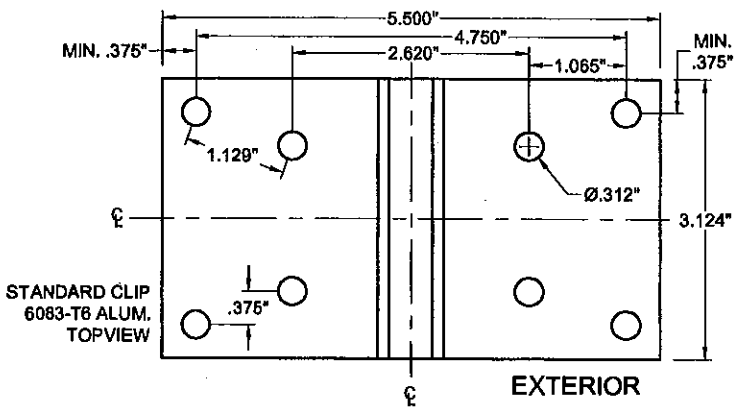

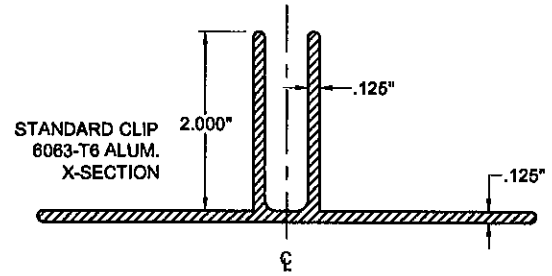

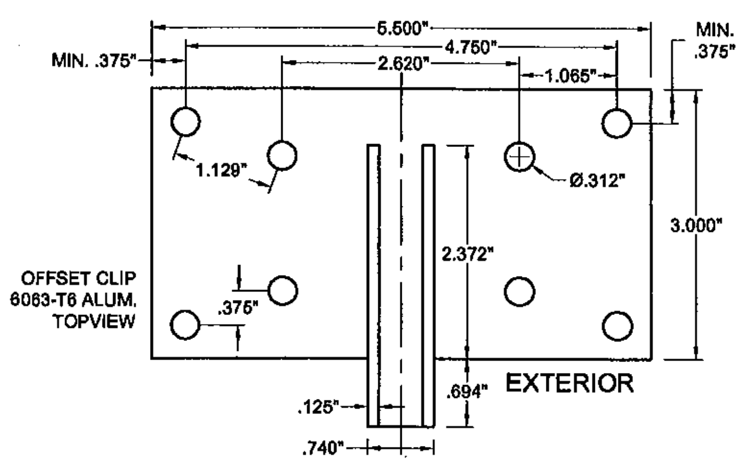

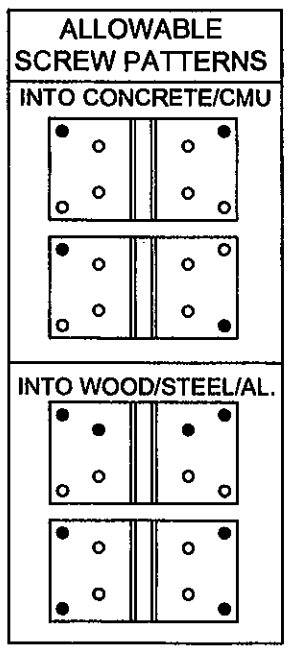

TABLE 8A

1 x 4 x .375 Alum. Tube Mullion — Rectangular Loading — Design Pressure (lbs/ft²) — Opening (Vertical or Horizontal)

Mull Length (Vertical or Horizontal)	50 in			60 in			70 in			80 in			90 in			100 in			110 in			120 in			140 in			160 in		
Anchor and Substrate Type, See Table B	A	B	C	A	B	C	A	B	C	A	B	C	A	B	C	A	B	C	A	B	C	A	B	C	A	B	C	A	B	C
# of Anchors	2	2	4	2	2	4	2	2	4	2	2	4	2	2	4	2	2	4	2	2	4	2	2	4	2	2	4	2	2	4
42 in	119	97	119	109	81	109	99	69	99	89	61	89	79	54	79	71	49	71	65	44	65	60	40	60	51	35	51	45	30	45
48 in	126	65	126	108	71	117	92	81	108	81	53	99	72	47	90	65	42	82	59	39	74	54	35	68	46	30	58	40	27	61
50.625 in	123	81	128	102	67	120	88	58	111	77	50	103	88	45	94	61	40	86	56	37	78	51	34	72	44	29	61	38	25	54
54 in	115	76	131	96	63	123	82	54	115	72	47	107	64	42	95	57	38	86	52	34	78	48	31	71	41	27	61	36	24	54
60 in	103	68	135	88	57	128	74	49	110	65	42	96	57	38	88	52	34	77	47	31	70	43	28	64	37	24	55	32	21	46
63 in	99	65	136	82	54	123	70	46	105	62	40	92	55	36	82	49	32	74	45	29	67	41	27	61	35	23	53	31	20	46
66 in	94	62	138	78	51	117	67	44	100	59	39	88	52	34	76	47	31	70	43	28	64	39	26	58	34	22	50	29	19	44
72 in	88	57	129	72	47	107	62	40	92	54	35	80	48	31	71	43	28	64	39	26	58	36	24	54	31	20	46	27	18	40
76 in	82	54	122	68	45	102	58	36	87	51	34	76	45	30	68	41	27	61	37	24	55	34	22	51	29	19	44	26	17	38
78 in	80	52	119	66	44	99	57	37	65	50	33	74	44	29	66	40	26	59	36	24	54	33	22	49	28	19	42	25	16	37
90 in	69	45	96	57	38	79	49	32	66	43	28	57	38	25	50	34	23	44	31	21	40	29	19	36	25	16	31	22		26
96 in	65	42	80	64	35	85	46	30	55	40	27	47	36	24	41	32	21	37	29	19	33	27	18	30	23	15	25	20		22
108 in	57	38	57	46	31	46	39	27	39	34	24	34	30	21	30	26	19	26	24	17	24	21	18	21	18		18	16		16
111 in	52	37	52	43	31	43	36	28	36	31	23	31	27	20	27	24	16	24	22	17	22	20	15	20	17		17			
120 in	42	34	42	34	28	34	29	24	29	25	21	25	22	19	22	19	17	19	17	15	17	16		16						
144 in	24	24	24	20	20	20	17	17	17	15	15	15																		

TABLE 8B

1 x 4 x .375 Alum. Tube Mullion — Triangular/Trapezoidal Loading — Design Pressure (lbs/ft²) — Opening (Vertical or Horizontal)

Mull Length (Vertical or Horizontal)	50 in			60 in			70 in			80 in			90 in			100 in			110 in			120 in			140 in			160 in		
Anchor and Substrate Type, See Table B	A	B	C	A	B	C	A	B	C	A	B	C	A	B	C	A	B	C	A	B	C	A	B	C	A	B	C	A	B	C
# of Anchors	2	2	4	2	2	4	2	2	4	2	2	4	2	2	4	2	2	4	2	2	4	2	2	4	2	2	4	2	2	4
42 in	170	138	170	170	126	170	170	119	170	170	116	170	170	116	170	170	116	170	170	116	170	170	116	170	170	116	170	170	116	170
48 in	170	115	170	157	103	170	145	96	170	139	91	170	135	89	170	135	69	170	135	69	170	135	69	170	135	69	170	135	89	170
50.625 in	163	107	170	145	95	170	134	68	170	127	83	170	123	81	170	121	80	170	121	80	170	121	80	170	121	60	170	121	80	170
54 in	150	98	170	133	67	170	122	60	170	114	75	170	110	72	163	107	70	160	106	70	159	106	70	159	106	70	159	105	70	159
60 in	131	66	170	115	78	170	104	69	158	97	64	145	92	60	137	89	58	132	87	57	130	66	57	129	86	57	129	88	57	129
63 in	123	81	170	108	71	161	97	64	145	90	69	135	85	58	127	82	54	122	80	52	119	78	51	117	78	51	117	78	51	117
66 in	118	76	170	101	67	161	91	60	138	84	55	126	79	52	116	78	50	113	73	46	109	72	47	107	71	47	106	71	47	106
72 in	104	89	156	91	60	135	81	63	121	75	49	111	70	46	104	66	43	99	63	42	95	62	40	92	80	39	89	80	39	89
76 in	98	64	148	65	56	127	76	50	113	69	48	103	64	42	96	81	40	91	58	38	87	58	37	84	54	36	61	54	35	80
78 in	95	82	141	62	54	123	73	46	109	67	44	100	62	41	93	59	38	87	56	37	83	54	35	80	52	34	77	51	34	76
90 in	80	53	112	69	45	94	61	40	82	55	36	73	51	34	67	48	31	61	45	30	57	43	28	54	40	26	50	39	25	48
96 in	74	49	92	84	42	77	56	37	67	51	34	60	47	31	54	44	29	50	41	27	46	39	26	44	36	24	40	35	23	38
108 in	64	43	64	54	37	54	47	32	47	41	29	41	37	26	37	34	25	34	32	23	32	30	22	30	27	20	27	25	19	26
111 in	59	41	59	49	35	49	43	31	43	38	28	38	34	26	34	31	24	31	29	22	29	27	21	27	24	19	24	22	18	22
120 in	46	38	46	39	32	39	34	28	34	30	25	30	27	23	27	24	21	24	23	20	23	21	19	21	19	17	19	17	18	17
144 in	27	27	27	22	22	22	19	19	19	17	17	17	15	15	15															

TABLE NOTES:

1) LINEAR INTERPOLATION BETWEEN SIZES AND/OR DESIGN PRESSURES IS ALLOWABLE.
2) SCREW PATTERN APPLIES TO BOTH THE STANDARD AND OFFSET CLIP.
3) ALL MULLION CLIPS MAY BE FACTORY MACHINED AND CONTAIN UNUSED HOLES. IF NEEDED, HOLES MAY BE DRILLED IN THE FIELD FOLLOWING DIMENSIONS GIVEN ON THIS SHEET.
4) THE STANDARD AND OFFSET CLIP MAY BE COUNTERSUNK. THE INTERSECTION U-CLIP MAY NOT BE COUNTERSUNK.
5) SEE SHEETS 2-4 FOR GENERAL ANCHOR DESCRIPTIONS AND INSTALLATION METHODS.
6) FOR FENESTRATION PRODUCTS WHERE ALL FOUR SIDES ARE ANCHORED TO THE SUBSTRATE, USE THE TRIANGULAR/TRAPEZOIDAL LOADING TABLES (TABLE 8B). FOR FENESTRATION PRODUCTS WHERE NOT ALL FOUR SIDES ARE ANCHORED AND FOR ALL HINGED DOORS, USE THE RECTANGULAR LOADING TABLES, (TABLE 8A).

PGT®
1070 TECHNOLOGY DRIVE
N. VENICE, FL 34275
P.O. BOX 1529
NOKOMIS, FL 34274
FL CERT. OF AUTH.# 29296

Title: IMPACT-RESISTANT ALUMINUM TUBE MULLIONS
Description: 1 X 4 X .375 MULL SPECS
Series: N/A | Scale: N/A | Sheet: 12 of 18
Drawn By: J ROSOWSKI | Date: 12/13/10 | Drawing No. 6262JR
Checked By: | Date: | Rev:
Rev. By: | Date: | Revision:

Approved as complying with the Florida Building Code
Date May 26, 2011
NOA# 10-0819.05
Miami Dade Product Control
By Ishaq I. Chanda

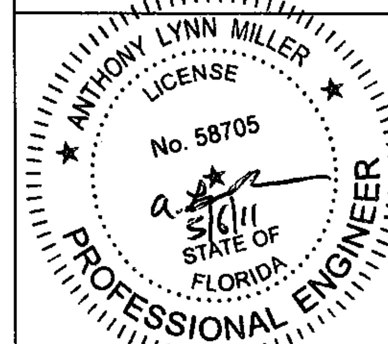

A. LYNN MILLER, P.E.
FL P.E.# 58705

2" X 4" X .25" TUBE MULLION AND CLIP

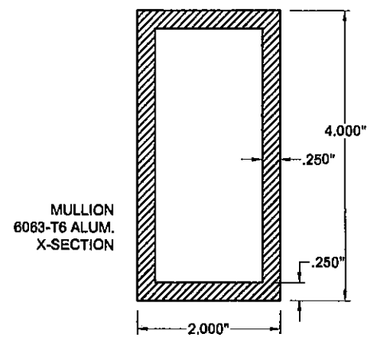

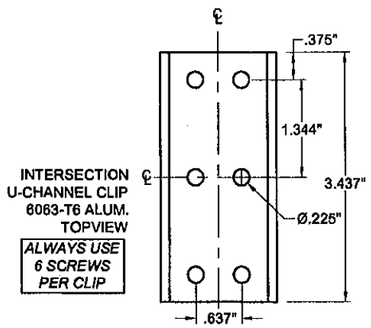

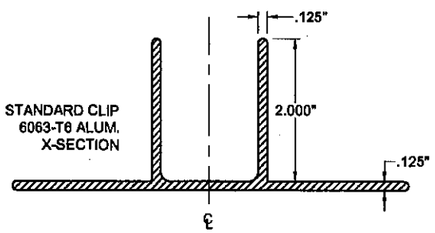

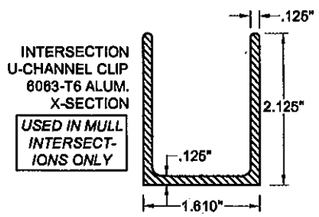

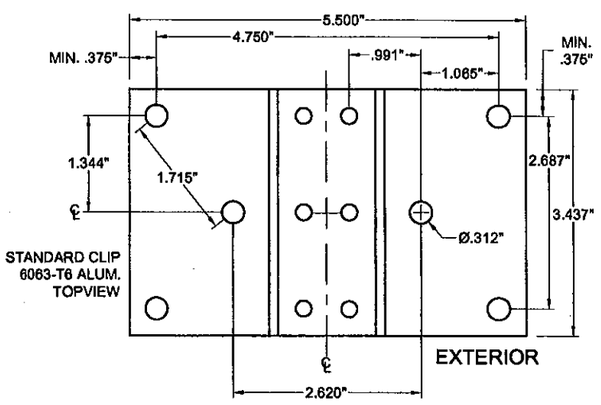

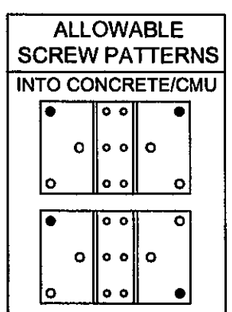

TABLE 9A

2 x 4 x .25 Alum. Tube Mullion	Rectangular Loading																													
	Design Pressure (lbs/ft²)																													
	Opening (Vertical or Horizontal)																													
	50 in			60 in			70 in			80 in			90 in			100 in			120 in			140 in			160 in					
Anchor and Substrate Type, See Table B	A	B	C	A	B	C	A	B	C	A	B	C	A	B	C	A	B	C	A	B	C	A	B	C	A	B	C	A	B	C
# of Anchors	2	2	6	2	2	6	2	2	6	2	2	6	2	2	6	2	2	6	2	2	6	2	2	6	2	2	6	2	2	6
Mull Length (Vertical or Horizontal)																														
42 in	119	97	119	109	81	109	99	69	99	89	61	89	79	54	79	71	49	71	60	40	60	51	35	51	45	30	45			
48 in	126	85	126	108	71	117	92	61	108	81	53	99	72	47	90	65	42	82	54	35	68	46	30	58	40	27	51			
50.625 in	123	81	128	102	67	120	88	58	111	77	50	103	68	45	94	61	40	86	51	34	72	44	29	61	38	25	54			
54 in	115	76	131	96	63	123	82	54	115	72	47	107	64	42	99	57	38	91	48	31	77	41	27	66	36	24	57			
60 in	103	68	135	86	57	128	74	49	120	65	42	113	57	38	106	52	34	99	43	28	85	37	24	73	32	21	64			
63 in	99	65	136	82	54	130	70	46	123	62	40	116	55	36	109	49	32	103	41	27	89	35	23	77	31	20	67			
66 in	94	62	138	78	51	131	67	44	125	59	39	118	52	34	112	47	31	105	39	26	88	34	22	75	29	19	66			
72 in	86	57	140	72	47	135	62	40	129	54	35	121	48	31	107	43	28	98	36	24	80	31	20	69	27	18	60			
76 in	82	54	142	68	45	136	58	38	131	51	34	114	45	30	102	41	27	91	34	22	76	29	19	65	26	17	57			
78 in	80	52	143	66	44	137	57	37	127	50	33	111	44	29	99	40	26	89	33	22	74	28	19	64	25	16	56			
90 in	69	45	146	57	38	129	49	32	110	43	28	94	38	25	83	34	23	73	29	19	60	25	16	51	22		44			
96 in	65	42	132	54	35	108	46	30	91	40	27	76	38	24	69	32	21	61	27	18	50	23	15	42	20		38			
108 in	57	38	94	48	31	77	41	27	65	36	24	56	32	21	49	29	19	43	24	16	35	21		30	18		26			
111 in	58	37	86	47	31	71	40	26	60	35	23	52	31	20	45	28	18	40	23	15	33	20		28	17		24			
120 in	52	34	69	43	28	58	37	24	48	32	21	41	29	19	36	26	17	32	22		26	18		22	16		19			
144 in	40	28	40	33	24	33	28	20	28	24	18	24	21	16	21	19		19	15		15									

TABLE 9B

2 x 4 x .25 Alum. Tube Mullion	Triangular/Trapezoidal Loading																													
	Design Pressure (lbs/ft²)																													
	Opening (Vertical or Horizontal)																													
	50 in			60 in			70 in			80 in			90 in			100 in			120 in			140 in			160 in					
Anchor and Substrate Type, See Table B	A	B	C	A	B	C	A	B	C	A	B	C	A	B	C	A	B	C	A	B	C	A	B	C	A	B	C	A	B	C
# of Anchors	2	2	6	2	2	4	2	2	6	2	2	6	2	2	6	2	2	4	2	2	6	2	2	6	2	2	6			
Mull Length (Vertical or Horizontal)																														
42 in	170	138	170	170	128	170	170	119	170	170	116	170	170	118	170	170	116	170	170	116	170	170	116	170	170	116	170			
48 in	170	115	170	157	103	170	145	96	170	139	91	170	135	89	170	135	89	170	135	89	170	135	89	170	135	89	170			
50.625 in	163	107	170	145	95	170	134	88	170	127	83	170	123	81	170	121	80	170	121	80	170	121	80	170	121	80	170			
54 in	150	98	170	133	87	170	122	80	170	114	75	170	110	72	170	107	70	170	106	70	170	106	70	170	106	70	170			
60 in	131	86	170	115	76	170	104	69	170	97	64	170	92	60	170	89	58	170	86	57	170	86	57	170	86	57	170			
63 in	123	81	170	108	71	170	97	64	170	90	59	170	85	56	170	82	54	170	76	51	170	78	51	170	78	51	170			
66 in	116	76	170	101	67	170	91	60	170	84	55	170	79	52	170	76	50	169	72	47	161	71	47	159	71	47	159			
72 in	104	69	170	91	60	170	81	53	170	75	49	167	70	46	156	66	43	148	62	40	138	60	39	134	60	39	134			
76 in	98	64	170	85	56	170	76	50	170	69	46	155	64	42	144	61	40	136	56	37	126	54	36	121	54	35	120			
78 in	95	62	170	82	54	170	73	48	164	67	44	150	62	41	139	59	38	131	54	35	121	52	34	115	51	34	114			
90 in	80	53	170	69	45	154	61	40	136	55	36	121	51	34	110	48	31	102	43	28	90	40	26	83	39	25	79			
96 in	74	49	152	64	42	128	56	37	111	51	34	99	47	31	90	44	29	82	39	26	72	36	24	66	35	23	62			
108 in	65	43	106	58	37	89	49	32	77	44	29	68	40	26	62	37	25	57	33	22	49	30	20	44	29	19	41			
111 in	63	41	97	54	35	82	47	31	71	43	28	63	39	26	57	36	24	52	32	21	45	29	19	40	27	18	37			
120 in	58	38	77	49	32	64	43	28	56	39	25	49	35	23	44	33	21	41	29	19	35	26	17	31	24	16	28			
144 in	44	31	44	37	26	37	32	23	32	28	21	28	25	19	25	23	17	23	20	15	20	17		17	16		16			

TABLE NOTES:

1) LINEAR INTERPOLATION BETWEEN SIZES AND/OR DESIGN PRESSURES IS ALLOWABLE.
2) ALL MULLION CLIPS MAY BE FACTORY MACHINED AND CONTAIN UNUSED HOLES. IF NEEDED, HOLES MAY BE DRILLED IN THE FIELD FOLLOWING DIMENSIONS GIVEN ON THIS SHEET.
3) THE STANDARD CLIP MAY BE COUNTERSUNK. THE INTERSECTION U-CLIP MAY NOT BE COUNTERSUNK.
4) SEE SHEETS 2-4 FOR GENERAL ANCHOR DESCRIPTIONS AND INSTALLATION METHODS.
5) FOR FENESTRATION PRODUCTS WHERE ALL FOUR SIDES ARE ANCHORED TO THE SUBSTRATE, USE THE TRIANGULAR/TRAPEZOIDAL LOADING TABLES (TABLE 9B). FOR FENESTRATION PRODUCTS WHERE NOT ALL FOUR SIDES ARE ANCHORED AND FOR ALL HINGED DOORS, USE THE RECTANGULAR LOADING TABLES, (TABLE 9A).

PGT®
1070 TECHNOLOGY DRIVE
N. VENICE, FL 34275
P.O. BOX 1529
NOKOMIS, FL 34274
FL CERT. OF AUTH.# 29296

Title: IMPACT-RESISTANT ALUMINUM TUBE MULLIONS
Description: 2 X 4 X .25 MULL SPECS
Series: N/A
Drawn By: J ROSOWSKI
Rev. By:
Sheet: 13 of 18
Rev:
Drawing No. 6262JR
Date:
Checked By:
Revision:
Scale: N/A
Date: 12/13/10
Date:

Approved as complying with the Florida Building Code
Date May 26, 2011
NOA# 10-0819.05
Miami Dade Product Control
By Ishwar I. Chand

ANTHONY LYNN MILLER
LICENSE
No. 58705
STATE OF FLORIDA
PROFESSIONAL ENGINEER
5/6/11

A. LYNN MILLER, P.E.
FL P.E.# 58705

2" X 6" X .25" TUBE MULLION AND CLIP

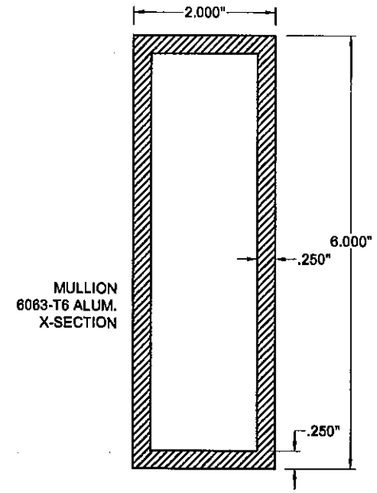

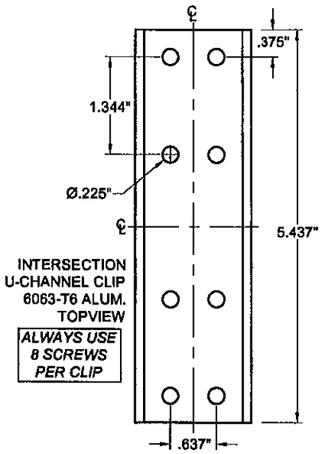

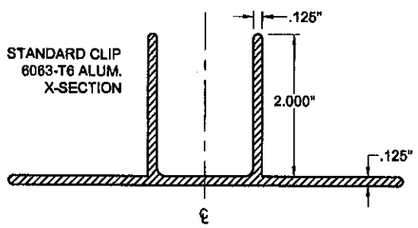

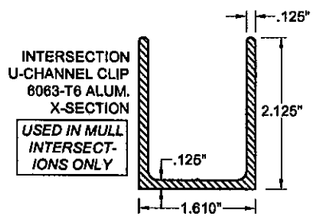

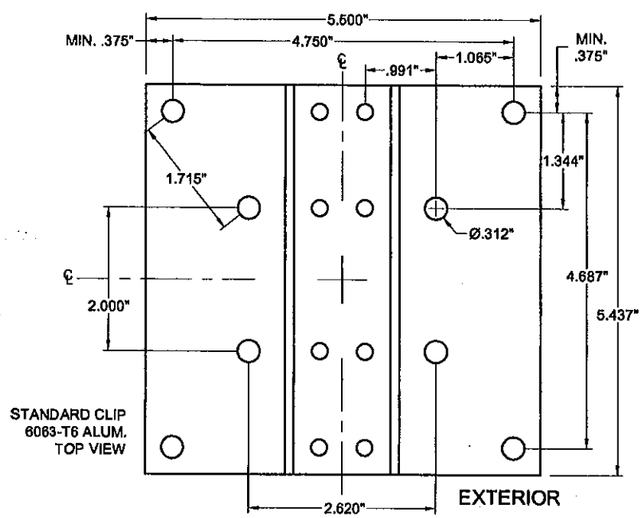

ALLOWABLE SCREW PATTERNS

INTO CONCRETE/CMU

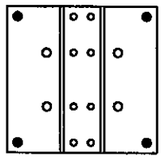

INTO WOOD/STEEL/AL.

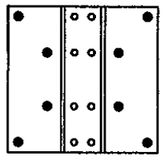

TABLE 10A

2 x 6 x .25 Alum. Tube Mullion	Rectangular Loading																													
	Design Pressure (lbs/ft²)																													
	Opening (Vertical or Horizontal)																													
	50 in			60 in			70 in			80 in			90 in			100 in			120 in			140 in			160 in					
Anchor and Substrate Type, See Table B	A	B	C	A	B	C	A	B	C	A	B	C	A	B	C	A	B	C	A	B	C	A	B	C	A	B	C	A	B	C
# of Anchors	4	4	8	4	4	8	4	4	8	4	4	8	4	4	8	4	4	8	4	4	8	4	4	8	4	4	8	4	4	8
Mull Length (Vertical or Horizontal)																														
42 in	119	119	119	109	109	109	99	99	99	89	89	89	79	79	79	71	71	71	60	60	60	51	51	51	45	45	45			
48 in	126	126	126	117	117	117	108	108	108	99	99	99	90	90	90	82	82	82	68	68	66	58	58	58	51	51	51			
50.625 in	128	128	128	120	120	120	111	111	111	103	101	103	94	90	94	88	81	88	72	67	72	61	56	61	54	50	54			
54 in	131	131	131	123	123	123	115	108	115	107	94	107	99	84	99	91	76	91	77	63	77	66	54	66	57	47	57			
60 in	135	135	135	128	113	128	120	97	120	113	85	113	106	76	106	99	68	99	85	57	85	73	49	73	64	42	64			
63 in	138	129	136	130	108	130	123	92	123	116	81	116	109	72	109	99	65	103	82	54	89	70	46	77	62	40	67			
66 in	138	124	138	131	103	131	125	88	125	116	77	116	105	69	112	94	62	106	78	51	93	67	44	80	59	39	70			
72 in	140	113	140	135	94	135	123	81	129	108	71	123	96	63	117	88	57	111	72	47	99	62	40	87	54	35	77			
76 in	142	107	142	136	89	136	117	77	131	102	67	125	91	60	120	82	54	114	68	45	102	58	38	87	51	34	76			
78 in	143	105	143	133	87	137	114	75	132	100	65	126	88	58	121	80	52	116	66	44	99	57	37	85	50	33	74			
90 in	138	91	148	115	76	142	99	65	137	86	57	129	77	50	114	69	45	103	57	38	86	49	32	74	43	28	64			
96 in	129	85	148	108	71	143	92	61	138	61	53	121	72	47	107	85	42	96	54	35	80	46	30	69	40	27	60			
108 in	115	76	150	96	63	143	82	54	123	72	47	107	64	42	95	57	38	86	48	31	71	41	27	61	36	24	54			
111 in	112	73	151	93	61	139	80	52	119	70	46	104	62	41	93	56	37	83	47	31	70	40	26	60	35	23	52			
120 in	103	68	152	86	57	129	74	49	110	65	42	98	57	38	86	52	34	77	43	28	64	37	24	55	32	21	48			
144 in	86	57	116	72	47	95	62	40	80	54	35	89	48	31	61	43	28	54	36	24	44	31	20	37	27	18	32			

TABLE 10B

2 x 6 x .25 Alum. Tube Mullion	Triangular/Trapezoidal Loading																													
	Design Pressure (lbs/ft²)																													
	Opening (Vertical or Horizontal)																													
	50 in			60 in			70 in			80 in			90 in			100 in			120 in			140 in			160 in					
Anchor and Substrate Type, See Table B	A	B	C	A	B	C	A	B	C	A	B	C	A	B	C	A	B	C	A	B	C	A	B	C	A	B	C	A	B	C
# of Anchors	4	4	8	4	4	8	4	4	8	4	4	8	4	4	8	4	4	8	4	4	8	4	4	8	4	4	8			
Mull Length (Vertical or Horizontal)																														
42 in	170	170	170	170	170	170	170	170	170	170	170	170	170	170	170	170	170	170	170	170	170	170	170	170	170	170	170			
48 in	170	170	170	170	170	170	170	170	170	170	170	170	170	170	170	170	170	170	170	170	170	170	170	170	170	170	170			
50.625 in	170	170	170	170	170	170	170	170	170	170	166	170	170	161	170	170	159	170	170	159	170	170	159	170	170	159	170			
54 in	170	170	170	170	170	170	170	160	170	170	150	170	170	144	170	170	141	170	170	140	170	170	140	170	170	140	170			
60 in	170	170	170	170	151	170	170	137	170	170	127	170	170	121	170	170	117	170	170	113	170	170	113	170	170	113	170			
63 in	170	162	170	170	142	170	170	128	170	170	119	170	170	112	170	163	107	170	157	103	170	158	103	170	158	103	170			
66 in	170	152	170	170	133	170	170	120	170	169	111	170	159	104	170	151	99	170	144	94	170	143	94	170	143	94	170			
72 in	170	137	170	170	119	170	163	107	170	149	98	170	139	92	170	132	87	170	123	81	170	120	79	170	120	79	170			
76 in	170	128	170	170	111	170	152	100	170	139	91	170	129	85	170	122	80	170	112	74	168	108	71	161	108	71	160			
78 in	170	125	170	164	108	170	147	96	170	134	88	170	124	82	170	117	77	170	108	71	161	103	68	154	102	67	152			
90 in	160	105	170	138	91	170	122	80	170	111	73	165	102	67	152	96	63	142	86	57	129	81	53	120	78	51	116			
96 in	149	98	170	128	84	170	113	74	168	102	67	152	94	62	140	87	57	130	78	51	117	73	48	108	69	46	103			
108 in	130	85	170	111	73	166	96	64	146	88	58	132	81	53	120	75	49	112	66	44	99	61	40	91	57	37	85			
111 in	126	83	170	108	71	161	95	62	142	85	56	127	78	51	116	72	47	108	64	42	95	58	38	87	55	36	82			
120 in	116	76	170	99	65	147	87	57	129	78	51	116	71	46	106	65	43	97	57	38	88	52	34	78	49	32	72			
144 in	94	62	127	80	53	106	70	46	92	63	41	81	57	37	72	52	34	66	45	30	58	41	27	49	37	25	44			

USED IN EXAMPLES ON SHEET 18

TABLE NOTES:

1) LINEAR INTERPOLATION BETWEEN SIZES AND/OR DESIGN PRESSURES IS ALLOWABLE.
2) ALL MULLION CLIPS MAY BE FACTORY MACHINED AND CONTAIN UNUSED HOLES. IF NEEDED, HOLES MAY BE DRILLED IN THE FIELD FOLLOWING DIMENSIONS GIVEN ON THIS SHEET.
3) THE STANDARD CLIP MAY BE COUNTERSUNK. THE INTERSECTION U-CLIP MAY NOT BE COUNTERSUNK.
4) SEE SHEETS 2-4 FOR GENERAL ANCHOR DESCRIPTIONS AND INSTALLATION METHODS.
5) FOR FENESTRATION PRODUCTS WHERE ALL FOUR SIDES ARE ANCHORED TO THE SUBSTRATE, USE THE TRIANGULAR/TRAPEZOIDAL LOADING TABLES (TABLE 10B). FOR FENESTRATION PRODUCTS WHERE NOT ALL FOUR SIDES ARE ANCHORED AND FOR ALL HINGED DOORS, USE THE RECTANGULAR LOADING TABLES, (TABLE 10A).

1070 TECHNOLOGY DRIVE
N. VENICE, FL 34275
P.O. BOX 1529
NOKOMIS, FL 34274
FL CERT. OF AUTH.# 29296

Title: IMPACT-RESISTANT ALUMINUM TUBE MULLIONS
Description: 2 X 6 X .25 MULL SPECS
Series: N/A
Drawing No. 6262JR
Sheet: 14 of 18
Rev:
Scale: N/A
Checked By:
Date:
Drawn By: J ROSOWSKI
Date: 12/13/10
Rev. By:
Date:
Revision:

Approved as noted in accordance with the Florida Building Code
Date May 26, 2011
NOA# 10-0818.05
Miami-Dade Product Control
By

ANTHONY LYNN MILLER
LICENSE
No. 58705
STATE OF FLORIDA
PROFESSIONAL ENGINEER
5/6/11

A. LYNN MILLER, P.E.
FL P.E.# 58705

1.26" X 2.11" X .125" TUBE MULLION AND CLIP

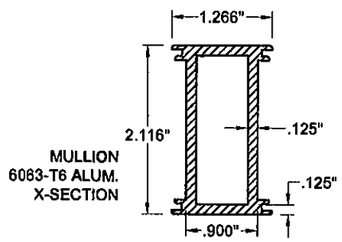

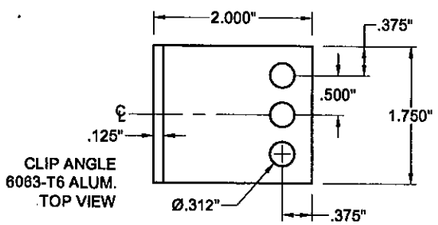

EXTERIOR

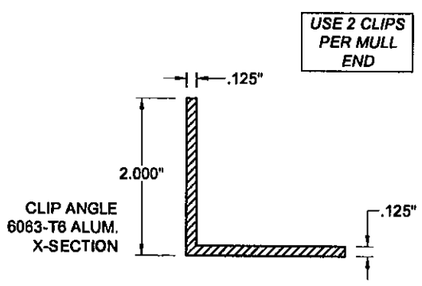

ALLOWABLE SCREW PATTERNS

INTO CONCRETE/CMU

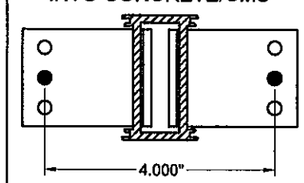

INTO WOOD/STEEL/AL.

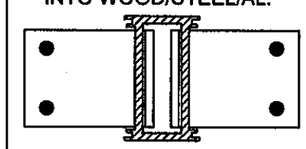

TABLE 11A

1.26" x 2.11" x .125" Alum Tube Mull	Rectangular Loading						Design Pressure (lbs/ft²)														
	Opening (Vertical or Horizontal)																				
	50 in			60 in			70 in			80 in			90 in			100 in			160 in		
Anchor and Substrate Type, See Table B	A	B	C	A	B	C	A	B	C	A	B	C	A	B	C	A	B	C	A	B	C
# of Anchors	2	2	4	2	2	4	2	2	4	2	2	4	2	2	4	2	2	4	2	2	4
Mull Length (Vertical or Horizontal) 42 in	117	97	117	98	81	98	81	69	81	70	61	70	63	54	63	56	49	56	35	30	35
48 in	80	80	80	65	65	65	55	55	55	46	48	48	42	42	42	38	38	38	24	24	24
50.625 in	89	69	69	56	56	56	47	47	47	41	41	41	36	36	36	32	32	32	20	20	20
54 in	57	57	57	46	46	46	39	39	39	34	34	34	30	30	30	27	27	27	17	17	17
60 in	42	42	42	34	34	34	29	29	29	25	25	25	22	22	22	19	19	19			
63 in	37	37	37	30	30	30	25	25	25	22	22	22	19	19	19	17	17	17			
66 in	32	32	32	26	26	26	22	22	22	19	19	19	17	17	17	15	15	15			
72 in	25	25	25	20	20	20	17	17	17	15	15	15									
76 in	21	21	21	17	17	17	15	15	15												
78 in	20	20	20	16	16	16															

TABLE 11B

1.26" x 2.11" x .126" Alum Tube Mull	Triangular/Trapezoidal Loading						Design Pressure (lbs/ft²)														
	Opening (Vertical or Horizontal)																				
	50 in			60 in			70 in			80 in			90 in			100 in			160 in		
Anchor and Substrate Type, See Table B	A	B	C	A	B	C	A	B	C	A	B	C	A	B	C	A	B	C	A	B	C
# of Anchors	2	2	4	2	2	4	2	2	4	2	2	4	2	2	4	2	2	4	2	2	4
Mull Length (Vertical or Horizontal) 42 in	167	138	167	149	126	149	139	119	139	135	116	135	134	116	134	134	116	134	134	116	134
48 in	108	108	108	95	95	95	86	86	86	81	81	81	79	79	79	79	79	79	79	79	79
50.625 in	91	91	91	79	79	79	72	72	72	67	67	67	65	85	65	64	64	64	64	64	64
54 in	74	74	74	64	64	64	58	58	58	53	53	53	51	51	51	49	49	49	49	49	49
60 in	53	53	53	46	46	46	41	41	41	37	37	37	35	35	35	33	33	33	32	32	32
63 in	46	46	46	39	39	39	35	35	35	32	32	32	29	29	29	28	28	28	26	28	26
66 in	39	39	39	34	34	34	30	30	30	27	27	27	25	25	25	24	24	24	22	22	22
72 in	30	30	30	26	26	26	23	23	23	20	20	20	19	19	19	18	18	18	16	16	16
76 in	25	25	25	22	22	22	19	19	19	17	17	17	16	16	16	15	15	15			
78 in	23	23	23	20	20	20	17	17	17	16	18	16									

TABLE NOTES:

1) LINEAR INTERPOLATION BETWEEN SIZES AND/OR DESIGN PRESSURES IS ALLOWABLE.
2) ALL MULLION CLIPS MAY BE FACTORY MACHINED AND CONTAIN UNUSED HOLES. IF NEEDED, HOLES MAY BE DRILLED IN THE FIELD FOLLOWING DIMENSIONS GIVEN ON THIS SHEET.
3) THE CLIP ANGLE MAY BE COUNTERSUNK.
4) SEE SHEETS 2-4 FOR GENERAL ANCHOR DESCRIPTIONS AND INSTALLATION METHODS.
5) FOR FENESTRATION PRODUCTS WHERE ALL FOUR SIDES ARE ANCHORED TO THE SUBSTRATE, USE THE TRIANGULAR/TRAPEZOIDAL LOADING TABLES (TABLE 11B). FOR FENESTRATION PRODUCTS WHERE NOT ALL FOUR SIDES ARE ANCHORED AND FOR ALL HINGED DOORS, USE THE RECTANGULAR LOADING TABLES, (TABLE 11A).

PGT®
1070 TECHNOLOGY DRIVE
N. VENICE, FL 34275
P.O. BOX 1529
NOKOMIS, FL 34274
FL CERT. OF AUTH.# 29296

Title: IMPACT-RESISTANT ALUMINUM TUBE MULLIONS
Description: 1.26 X 2.11 X .125 MULL SPECS
Series: N/A
Drawn By: J ROSOWSKI
Date: 12/13/10
Scale: N/A
Drawing No. 6262JR
Checked By:
Date:
Revision:
Date:
Sheet: 15 of 18
Rev:
Rev. By:

Approved as complying with the Florida Building Code
Date May 26, 2011
NOA# 10 08 19.05
Miami Dade Product Control
By Ishang I. Chande

ANTHONY LYNN MILLER
LICENSE
No. 58705
5/6/11
STATE OF FLORIDA
PROFESSIONAL ENGINEER

A. LYNN MILLER, P.E.
FL P.E.# 58705

30°/3.25" TUBE BAY MULLION AND CLIP

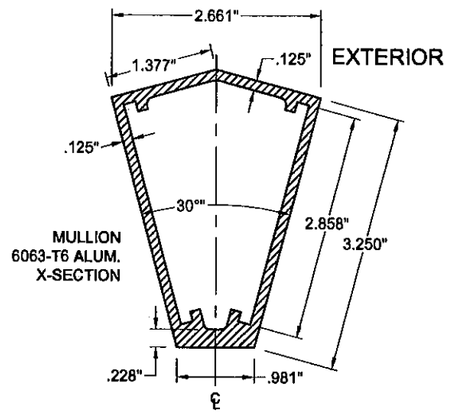

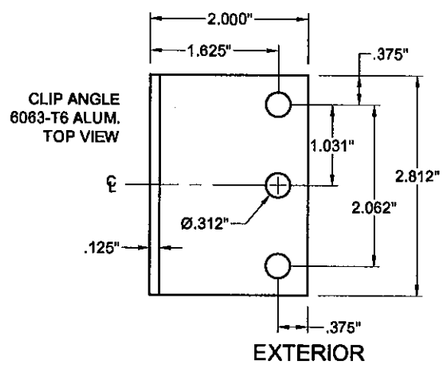

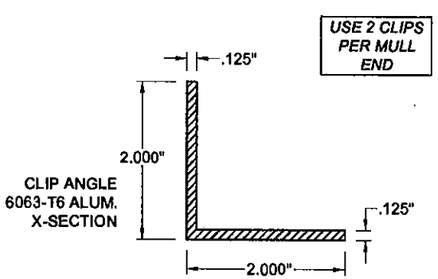

ALLOWABLE SCREW PATTERNS

INTO CONCRETE/CMU

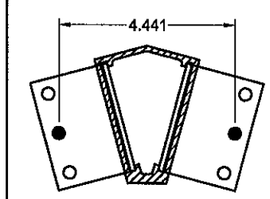

INTO WOOD/STEEL/AL.

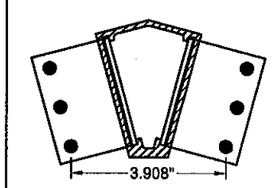

TABLE 12A

3.25" 30 DEG. AL BAY MULL	Rectangular Loading						Design Pressure (lbs/ft²)																	
	Opening (Vertical or Horizontal)																							
	50 in			60 in			70 in			80 in			90 in			100 in			110 in			160 in		
Anchor and Substrate Type, See Table B	A	B	C	A	B	C	A	B	C	A	B	C	A	B	C	A	B	C	A	B	C	A	B	C
# of Anchors	2	2	6	2	2	6	2	2	6	2	2	6	2	2	6	2	2	6	2	2	6	2	2	6
Mull Length (Vertical or Horizontal) 42 in	119	97	119	109	81	109	99	69	99	89	61	89	79	54	79	71	49	71	65	44	65	45	30	45
48 in	126	85	126	108	71	117	92	61	108	81	53	99	72	47	90	65	42	82	59	39	74	40	27	51
50.625 in	123	81	128	102	67	120	88	58	111	77	50	103	68	45	94	61	40	86	56	37	76	38	25	54
54 in	115	76	131	96	63	123	82	54	115	72	47	107	64	42	99	57	38	91	52	34	83	36	24	57
60 in	103	68	135	86	57	128	74	49	120	65	42	113	57	38	100	52	34	89	47	31	80	32	21	55
63 in	99	65	136	82	54	130	70	46	122	62	40	104	55	36	91	49	32	81	45	29	73	31	20	50
66 in	94	62	138	76	51	128	67	44	108	59	39	93	52	34	61	47	31	72	43	28	65	29	19	45
72 in	86	57	122	72	47	100	62	40	84	54	35	72	48	31	63	43	26	56	39	26	51	27	16	34
76 in	82	54	105	68	45	85	58	38	72	51	34	62	45	30	54	41	27	48	37	24	43	26	17	29
78 in	80	52	97	66	44	79	57	37	67	50	33	57	44	29	50	40	26	45	36	24	40	25	16	27
90 in	64	45	64	52	36	52	44	32	44	38	26	36	33	25	33	30	23	30	27	21	27	16		18
98 in	53	42	53	43	35	43	37	30	37	32	27	32	26	24	26	25	21	25	22	19	22	15		15
108 in	38	38	38	31	31	31	26	26	26	22	22	22	20	20	20	18	18	18	16	16	16			
111 in	35	35	35	29	29	29	24	24	24	21	21	21	16	18	18	16	18	16	15	15	15			
120 in	28	28	28	23	23	23	19	19	19	17	17	17	15	15	15									
144 in	16	16	16																					

TABLE 12B

3.25" 30 DEG. AL BAY MULL	Triangular/Trapezoidal Loading						Design Pressure (lbs/ft²)																	
	Opening (Vertical or Horizontal)																							
	50 in			60 in			70 in			80 in			90 in			100 in			110 in			160 in		
Anchor and Substrate Type, See Table B	A	B	C	A	B	C	A	B	C	A	B	C	A	B	C	A	B	C	A	B	C	A	B	C
# of Anchors	2	2	6	2	2	6	2	2	6	2	2	6	2	2	6	2	2	6	2	2	6	2	2	6
Mull Length (Vertical or Horizontal) 42 in	170	138	170	170	126	170	170	119	170	170	116	170	170	116	170	170	116	170	170	116	170	170	116	170
48 in	170	115	170	157	103	170	145	96	170	139	91	170	135	89	170	135	89	170	135	89	170	135	89	170
50.625 in	163	107	170	145	95	170	134	88	170	127	83	170	123	81	170	121	80	170	121	80	170	121	80	170
54 in	150	98	170	133	87	170	122	80	170	114	75	170	110	72	170	107	70	170	106	70	170	106	70	170
60 in	131	86	170	115	76	170	104	69	170	97	64	170	92	60	160	89	58	152	87	57	146	86	57	146
63 in	123	81	170	106	71	170	97	64	169	90	59	153	85	56	142	82	54	134	80	52	129	78	51	126
66 in	116	76	170	101	67	166	91	60	147	84	55	133	79	52	123	76	50	117	73	48	112	71	47	108
72 in	104	69	148	91	60	126	81	53	111	75	49	100	70	46	92	66	43	86	63	42	82	60	39	76
76 in	98	64	125	85	56	108	76	50	93	69	46	84	64	42	77	61	40	72	58	38	66	54	35	62
78 in	95	62	116	82	54	98	73	48	86	67	44	77	62	41	71	59	38	66	56	37	62	51	34	55
90 in	74	53	74	63	45	63	55	40	55	49	36	49	44	34	44	41	31	41	38	30	38	32	25	32
98 in	61	49	61	52	42	52	45	37	45	40	34	40	36	31	36	33	29	33	31	27	31	25	23	25
108 in	43	43	43	36	36	36	31	31	31	28	26	26	25	25	25	23	23	23	21	21	21	16	16	16
111 in	39	39	39	33	33	33	29	29	29	25	25	25	23	23	23	21	21	21	19	19	19	15	15	15
120 in	31	31	31	26	26	26	22	22	22	20	20	20	16	18	16	16	16	16	15	15	15			
144 in	18	18	18	15	15	15																		

TABLE NOTES:

1) LINEAR INTERPOLATION BETWEEN SIZES AND/OR DESIGN PRESSURES IS ALLOWABLE.
2) ALL MULLION CLIPS MAY BE FACTORY MACHINED AND CONTAIN UNUSED HOLES. IF NEEDED, HOLES MAY BE DRILLED IN THE FIELD FOLLOWING DIMENSIONS GIVEN ON THIS SHEET.
3) THE CLIP ANGLE MAY BE COUNTERSUNK.
4) SEE SHEETS 2-4 FOR GENERAL ANCHOR DESCRIPTIONS AND INSTALLATION METHODS.
5) FOR FENESTRATION PRODUCTS WHERE ALL FOUR SIDES ARE ANCHORED TO THE SUBSTRATE, USE THE TRIANGULAR/TRAPEZOIDAL LOADING TABLES (TABLE 12B). FOR FENESTRATION PRODUCTS WHERE NOT ALL FOUR SIDES ARE ANCHORED AND FOR ALL HINGED DOORS, USE THE RECTANGULAR LOADING TABLES, (TABLE 12A).

PGT®
1070 TECHNOLOGY DRIVE
N. VENICE, FL 34275
P.O. BOX 1529
NOKOMIS, FL 34274
FL CERT. OF AUTH.# 29296

Title: IMPACT-RESISTANT ALUMINUM TUBE MULLIONS
Description: 30° X 3.25 MULL SPECS
Series: N/A
Drawn By: J ROSOWSKI
Date: 12/13/10
Rev. By:
Date:
Scale: N/A
Drawing No. 6262JR
Checked By:
Date:
Revision:
Sheet: 16 of 18
Rev:

Approved as complying with the Florida Building Code
Date May 26 2011
NOA# 10 0824.01 05
Miami Dade Product Control
By Ignacio J. Chanel

ANTHONY LYNN MILLER
LICENSE
No. 58705
5/6/11
STATE OF FLORIDA
PROFESSIONAL ENGINEER

A. LYNN MILLER, P.E.
FL P.E.# 58705

45°/3.25" TUBE BAY MULLION AND CLIP

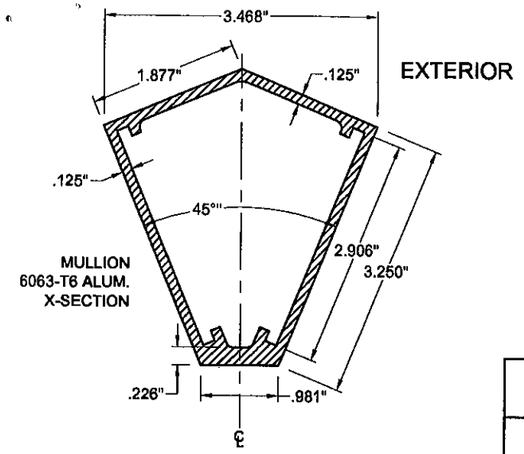

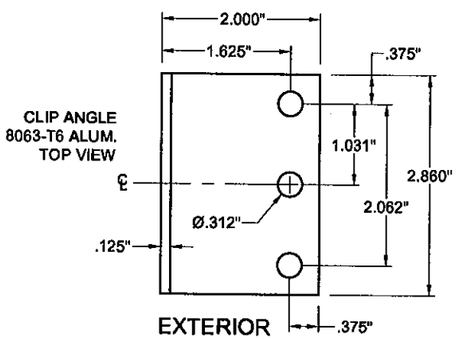

USE 2 CLIPS PER MULL END

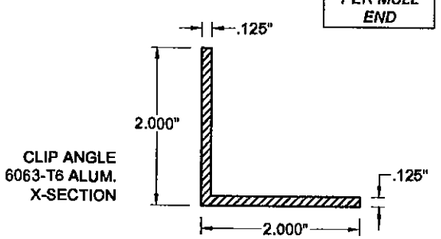

ALLOWABLE SCREW PATTERNS

INTO CONCRETE/CMU

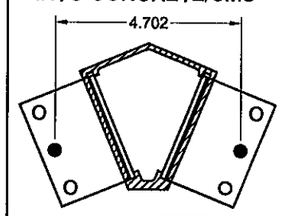

INTO WOOD/STEEL/AL.

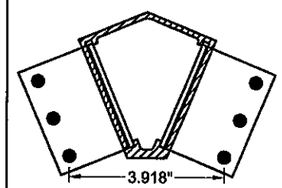

TABLE 13A

3.25" 45 DEG. AL BAY MULL	Rectangular Loading																							
	Design Pressure (lbs/ft²)																							
	Opening (Vertical or Horizontal)																							
	50 in			60 in			70 in			80 in			90 in			100 in			110 in			160 in		
Anchor and Substrate Type, See Table B	A	B	C	A	B	C	A	B	C	A	B	C	A	B	C	A	B	C	A	B	C	A	B	C
# of Anchors	2	2	6	2	2	6	2	2	6	2	2	6	2	2	6	2	2	6	2	2	6	2	2	6
Mull Length (Vertical or Horizontal)																								
42 in	119	97	119	109	81	109	99	69	99	89	61	89	79	54	79	71	49	71	65	44	65	45	30	45
48 in	126	85	126	108	71	117	92	61	108	81	53	99	72	47	90	65	42	82	59	39	74	40	27	51
50.625 in	123	81	128	102	67	120	88	58	111	77	50	103	68	45	94	61	40	88	56	37	76	38	25	54
54 in	115	76	131	96	63	123	82	54	115	72	47	107	64	42	99	57	36	91	52	34	83	36	24	57
60 in	103	68	135	86	57	128	74	49	120	65	42	113	57	38	106	52	34	95	47	31	86	32	21	59
63 in	99	65	136	82	54	130	70	46	123	62	40	112	55	36	98	49	32	87	45	29	78	31	20	53
66 in	94	62	138	78	51	131	67	44	120	59	39	103	52	34	90	47	31	80	43	28	72	29	19	49
72 in	86	57	140	72	47	114	62	40	96	54	35	83	46	31	73	43	28	65	39	26	58	27	18	39
76 in	82	54	120	68	45	98	58	36	82	51	34	71	45	30	62	41	27	55	37	24	50	26	17	34
78 in	80	52	111	66	44	91	57	37	76	50	33	66	44	29	58	40	26	51	36	24	46	25	16	31
90 in	69	45	74	57	38	60	49	32	51	43	28	44	38	25	38	34	23	34	30	21	30			
96 in	61	42	61	50	35	50	42	30	42	36	27	36	32	24	32	28	21	28	25	19	25			
108 in	43	38	43	35	31	35	30	27	30	26	24	26	23	21	23	20	19	20	18	17	16			
111 in	40	37	40	33	31	33	28	26	26	24	23	24	21	20	21	19	18	19	17	17	17			
120 in	32	32	32	26	26	26	22	22	22	19	19	19	17	17	17	15	15	15						

TABLE 13B

3.25" 45 DEG. AL BAY MULL	Triangular/Trapezoidal Loading																							
	Design Pressure (lbs/ft²)																							
	Opening (Vertical or Horizontal)																							
	50 in			60 in			70 in			80 in			90 in			100 in			110 in			160 in		
Anchor and Substrate Type, See Table B	A	B	C	A	B	C	A	B	C	A	B	C	A	B	C	A	B	C	A	B	C	A	B	C
# of Anchors	2	2	6	2	2	6	2	2	6	2	2	6	2	2	6	2	2	6	2	2	6	2	2	6
Mull Length (Vertical or Horizontal)																								
42 in	170	138	170	170	126	170	170	119	170	170	116	170	170	116	170	170	116	170	170	116	170	170	116	170
48 in	170	115	170	157	103	170	145	98	170	139	91	170	135	89	170	135	89	170	135	89	170	135	89	170
50.625 in	163	107	170	145	95	170	134	88	170	127	83	170	123	81	170	121	80	170	121	80	170	121	80	170
54 in	150	98	170	133	87	170	122	80	170	114	75	170	110	72	170	107	70	170	106	70	170	106	70	170
60 in	131	86	170	115	76	170	104	69	170	97	64	170	92	60	170	69	58	164	87	57	159	86	57	157
63 in	123	81	170	108	71	170	97	64	170	90	59	165	85	56	153	82	54	144	80	52	139	76	51	136
66 in	116	76	170	101	67	170	91	60	164	64	55	148	79	52	137	76	60	128	73	48	123	71	47	118
72 in	104	69	170	91	60	145	81	53	127	75	49	115	70	46	108	66	43	99	63	42	94	60	39	86
76 in	98	64	144	85	56	122	76	50	107	69	46	96	64	42	88	61	40	82	58	38	76	54	35	71
78 in	95	62	133	82	54	113	73	48	99	67	44	89	62	41	81	59	38	75	56	37	71	51	34	64
90 in	80	53	85	69	45	72	61	40	63	55	36	56	51	34	51	47	31	47	44	30	44	38	25	36
96 in	70	49	70	59	42	59	51	37	51	46	34	46	41	31	41	38	29	38	35	27	35	29	23	29
108 in	49	43	49	41	37	41	36	32	36	32	29	32	29	26	29	26	25	26	24	23	24	19	19	19
111 in	45	41	45	38	35	38	33	31	33	29	28	29	26	26	26	24	24	24	22	22	22	17	17	17
120 in	36	36	36	30	30	30	26	26	26	23	23	23	21	21	21	19	19	19	17	17	17			
144 in	20	20	20	17	17	17	15	15	15															

TABLE NOTES:

1) LINEAR INTERPOLATION BETWEEN SIZES AND/OR DESIGN PRESSURES IS ALLOWABLE.
2) ALL MULLION CLIPS MAY BE FACTORY MACHINED AND CONTAIN UNUSED HOLES. IF NEEDED, HOLES MAY BE DRILLED IN THE FIELD FOLLOWING DIMENSIONS GIVEN ON THIS SHEET.
3) THE CLIP ANGLE MAY BE COUNTERSUNK.
4) SEE SHEETS 2-4 FOR GENERAL ANCHOR DESCRIPTIONS AND INSTALLATION METHODS.
5) FOR FENESTRATION PRODUCTS WHERE ALL FOUR SIDES ARE ANCHORED TO THE SUBSTRATE, USE THE TRIANGULAR/TRAPEZOIDAL LOADING TABLES (TABLE 13B). FOR FENESTRATION PRODUCTS WHERE NOT ALL FOUR SIDES ARE ANCHORED AND FOR ALL HINGED DOORS, USE THE RECTANGULAR LOADING TABLES, (TABLE 13A).

DCI®
1070 TECHNOLOGY DRIVE
N. VENICE, FL 34275
P.O. BOX 1529
NOKOMIS, FL 34274
FL CERT. OF AUTH.# 29296

Title: IMPACT-RESISTANT ALUMINUM TUBE MULLIONS
Description: 45° X 3.25 MULL SPECS
Drawing No.: 6262JR
Sheet: 17 of 18
Rev.:
Scale: N/A
Checked By:
Date:
Revision:
Drawn By: J ROSOWSKI
Date: 12/13/10
Rev. By:
Date:

Approved as complying with the Florida Building Code
Date May 26, 2011
NOA# 10-0811.05
Miami Dade Product Control
By Ishaq I. Chunda

ANTHONY LYNN MILLER
LICENSE
No. 58705
5/6/11
STATE OF FLORIDA
PROFESSIONAL ENGINEER

A. LYNN MILLER, P.E.
FL P.E.# 58705

EXAMPLE 1: SINGLE VERTICAL MULLION

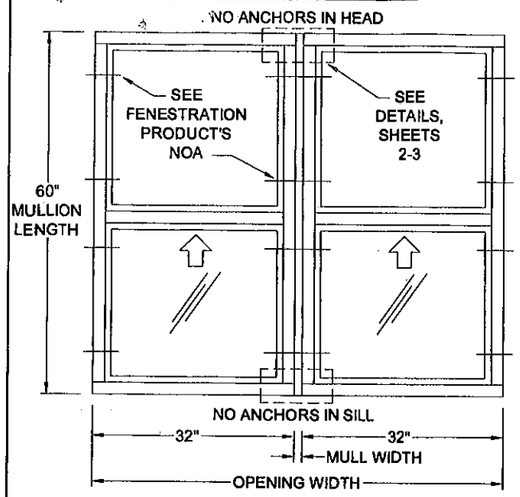

THE BUILDING SUBSTRATE IS KNOWN TO BE WOOD ON ALL FOUR SIDES. THE WINDOW FRAME DEPTH IS 2-1/4". THE OPENING REQUIRES A DESIGN PRESSURE OF +80.0/-85.0 PSF.

1) SELECT WHICH METHOD OF ATTACHMENT IS THE MOST SUITABLE FOR YOUR APPLICATION FROM TABLE B, SHEET 3. FOR THIS EXAMPLE, ANCHOR/SUBSTRATE TYPE "C" WILL BE USED FOR BOTH ENDS OF THE VERTICAL MULLION.

2) THE MULLION LENGTH IS 60" AND THE OPENING IS 32"+32 =64". BECAUSE THE SILL OF THE WINDOWS ARE NOT ANCHORED, THE TABLES USING RECTANGULAR LOADING MUST BE USED. SCAN THE MULLION TABLES FOR A MULLION THAT IS AT LEAST THE WINDOW FRAME DEPTH OF 2-1/4" AND WILL MEET OR EXCEED THE REQUIRED DESIGN PRESSURE OF +80.0/-85.0 PSF WHEN USING THE "C" COLUMN AS DETERMINED IN THE PREVIOUS STEP. IF THE TABLE DOES NOT SHOW THE EXACT SIZE, USE THE NEXT LARGER SIZE AVAILABLE.

FROM TABLE 3A, SHEET 7, THE 1" X 2.75" X .375" MULLION MEETS THE DEPTH REQUIRED, HOWEVER THE DESIGN PRESSURE IS +/-82.0 PSF AND WOULD NOT BE SUITABLE FOR THIS APPLICATION.

FROM TABLE 4A, SHEET 8, THE 1" X 2.75" X .650" MULLION (LENGTH = 60", OPENING = 64") HAS A DESIGN PRESSURE OF +/-98.0 PSF WHICH EXCEEDS THE REQUIREMENTS FOR THE OPENING AND MAY BE USED IN THIS APPLICATION. NOTE THE NUMBER OF ANCHORS REQUIRED IN THE CLIP.

BECAUSE THE MULLION ADDS 1" TO THE WIDTH OF THE MULLED UNIT, THE ADJUSTED BUCK WIDTH IS 32"+1"+32"=65". VERIFY THAT THE DESIGN PRESSURE IS STILL APPLICABLE FOR THE ADJUSTED WIDTH.

3) VERIFY THE DESIGN PRESSURE FOR THE FENESTRATION PRODUCTS USED WITH THIS MULLION SYSTEM. THE LOWER DESIGN PRESSURE, OF MULLIONS OR FENESTRATION PRODUCTS, WILL APPLY TO THE OVERALL ASSEMBLY. FINAL DESIGN PRESSURE REQUIRES THAT THE BOTH THE MULLION AND THE FENESTRATION PRODUCT BE INSTALLED IN ACCORDANCE WITH THE INSTALLATION SPECIFICATIONS INTO RESPECTIVE SUBSTRATES AND FENESTRATION PRODUCTS TO MULLION.

EXAMPLE 2: MULTIPLE MULLIONS

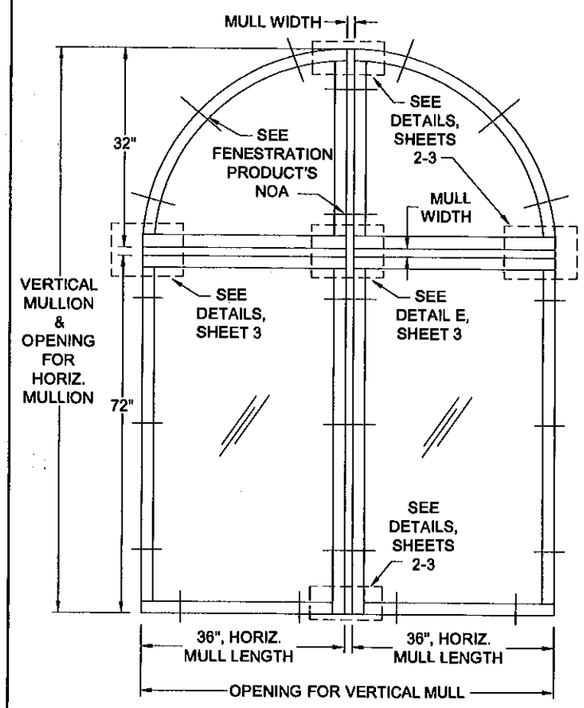

THE BUILDING SUBSTRATE IS KNOWN TO BE CMU ON THE JAMBS AND USES A CONCRETE HEADER AND SILL. THE WINDOW FRAME DEPTH IS 2-3/8". THE OPENING REQUIRES A DESIGN PRESSURE OF +50.0/-55.0 PSF.

1) SELECT WHICH METHOD OF ATTACHMENT IS THE MOST SUITABLE FOR YOUR APPLICATION FROM TABLE B, SHEET 3. FOR THIS EXAMPLE, ANCHOR/SUBSTRATE TYPE "A" WILL BE USED FOR THE END OF THE HORIZONTAL MULLION ATTACHING IN CMU AND TYPE "C" (INTERSECTION U-CLIP) WILL BE USED FOR THE END ATTACHING THE HORIZONTAL MULLION TO THE ALUMINUM VERTICAL MULLION. FOR BOTH ENDS OF THE VERTICAL MULLION ATTACHING TO CONCRETE, TYPE "A" WILL BE USED.

2) CHOOSE THE LONGER MULLION FIRST. FOR THE VERTICAL MULL, THE MULLION LENGTH IS 32"+72"=104" AND THE OPENING IS 36"+36 =72". BECAUSE THE FRAME OF THE WINDOWS ARE ANCHORED ON ALL 4 SIDES, THE TABLES USING TRAPEZOIDAL LOADING MAY BE USED. SCAN THE MULLION TABLES FOR A MULLION THAT IS AT LEAST THE WINDOW FRAME DEPTH OF 2-3/8" AND WILL MEET OR EXCEED THE REQUIRED DESIGN PRESSURE OF +50.0/-55.0 PSF WHEN USING THE "A" COLUMN AS DETERMINED IN THE PREVIOUS STEP. IF THE TABLE DOES NOT SHOW THE EXACT SIZE, USE THE NEXT LARGER SIZE AVAILABLE. THE 2" X 6" TUBE MULLION ON SHEET 14, TABLE 10B, MEETS OUR REQUIREMENTS WITH A DESIGN PRESSURE OF +/-88.0 PSF. NOTE THE NUMBER OF ANCHORS REQUIRED IN THE CLIP.

BECAUSE THE MULLION ADDS 2" TO THE WIDTH OF THE MULLED UNIT, THE ADJUSTED BUCK WIDTH IS 36"+2"+36"=74". VERIFY THAT THE DESIGN PRESSURE IS STILL APPLICABLE FOR THE ADJUSTED WIDTH.

3) FOR THE HORIZONTAL MULLION, THE MULL LENGTH IS 36" AND THE OPENING IS 32"+72"=104". BECAUSE THE FRAME OF THE WINDOWS ARE ANCHORED ON ALL 4 SIDES, THE TABLES USING TRAPEZOIDAL LOADING MAY BE USED. SCAN THE MULLION TABLES FOR A MULLION THAT IS AT LEAST THE WINDOW FRAME DEPTH OF 2-3/8" AND WILL MEET OR EXCEED THE REQUIRED DESIGN PRESSURE OF +50.0/-55.0 PSF WHEN USING THE "A" COLUMN AS DETERMINED IN STEP 1. IF THE TABLE DOES NOT SHOW THE EXACT SIZE, USE THE NEXT LARGER SIZE AVAILABLE. THE 1" X 2.75" X .375" TUBE MULLION ON TABLE 3B, SHEET 7 MEETS OUR REQUIREMENTS WITH A DESIGN PRESSURE OF +/-170.0 PSF. NOTE THE NUMBER OF ANCHORS REQUIRED IN THE CLIP.

BECAUSE THE MULLION ADDS 1" TO THE HEIGHT OF THE MULLED UNIT, THE ADJUSTED BUCK HEIGHT IS 32"+1"+72"=105". VERIFY THAT THE DESIGN PRESSURE IS STILL APPLICABLE FOR THE ADJUSTED HEIGHT. NOTE THAT THIS IS A DIFFERENT MULLION THAN THE VERTICAL MULLION. OPTIONALLY, THE SAME MULL COULD BE USED AS LONG AS THE FINAL DESIGN PRESSURE REQUIREMENTS ARE MET.

4) FOR THE INTERSECTION CLIP IN THE HORIZONTAL MULLION TO VERTICAL MULLION, USE 2 ANCHORS AS SPECIFIED ON THE INTERSECTION CLIP DETAIL FOR THIS MULLION IN SHEET 7. ANCHORS SHOULD BE #12 SHEET METAL SCREWS (ANCHOR TYPE C) SINCE THE SUBSTRATE IS ALUMINUM, SEE TABLE B, SHEET 3.

5) FROM THE ABOVE STEPS, OUR MULLION DESIGN PRESSURE IS:
+/-88.0 PSF FROM THE VERTICAL MULLION;
+/-170.0 PSF FROM THE 36" HORIZONTAL MULLION ATTACHING TO CMU;
+/-170.0 PSF FROM THE 36" HORIZONTAL MULLION ATTACHING TO THE VERTICAL MULLION (INTERSECTION).
THE LOWEST DESIGN PRESSURE IS +/-88.0 PSF AND WOULD APPLY TO ALL OF THE MULLIONS.

6) VERIFY THE DESIGN PRESSURE FOR THE FENESTRATION PRODUCTS USED WITH THIS MULLION SYSTEM. THE LOWER DESIGN PRESSURE, OF MULLIONS OR FENESTRATION PRODUCTS, WILL APPLY TO THE OVERALL ASSEMBLY. FINAL DESIGN PRESSURE REQUIRES THAT THE BOTH THE MULLION AND THE FENESTRATION PRODUCT BE INSTALLED IN ACCORDANCE WITH THE INSTALLATION SPECIFICATIONS INTO RESPECTIVE SUBSTRATES AND FENESTRATION PRODUCTS TO MULLION.

1070 TECHNOLOGY DRIVE
N. VENICE, FL 34275
P.O. BOX 1529
NOKOMIS, FL 34274
FL CERT. OF AUTH.# 29296

Title: IMPACT-RESISTANT ALUMINUM TUBE MULLIONS
Description: EXAMPLES
Series: N/A
Scale: N/A
Date: 12/13/10
Drawing No. 6262JR
Checked By:
Date:
Revision:
Sheet: 18 of 18
Rev:
Drawn By: J ROSOWSKI
Rev. By:
Date:

Approved as complying with the Florida Building Code
Date 11/ay 26, 2011
NOA# 10-0819.05
Miami Dade Product Control
By Ishaq I. Chunda

ANTHONY LYNN MILLER
LICENSE
No. 58705
5/6/11
STATE OF FLORIDA
PROFESSIONAL ENGINEER

A. LYNN MILLER, P.E.
FL P.E.# 58705