MIAMI-DADE COUNTY

BUILDING CODE COMPLIANCE OFFICE (BCCO)
PRODUCT CONTROL DIVISION

MIAMI–DADE COUNTY, FLORIDA
METRO–DADE FLAGLER BUILDING
140 WEST FLAGLER STREET, SUITE 1603
MIAMI, FLORIDA 33130-1563
(305) 375-2901 FAX (305) 372-6339
www.miamidade.gov/buildingcode

NOTICE OF ACCEPTANCE (NOA)

Crawford Glass Company Inc.
3301 S. W. 13th Drive, Suite No. B
Deerfield Beach, Fl. 33442-8101

SCOPE:

This NOA is being issued under the applicable rules and regulations governing the use of construction materials. The documentation submitted has been reviewed by Miami–Dade County Product Control Division and accepted by the Board of Rules and Appeals (BORA) to be used in Miami–Dade County and other areas where allowed by the Authority Having Jurisdiction (AHJ).

This NOA shall not be valid after the expiration date stated below. The Miami–Dade County Product Control Division (In Miami–Dade County) and/or the AHJ (in areas other than Miami–Dade County) reserve the right to have this product or material tested for quality assurance purposes. If this product or material fails to perform in the accepted manner, the manufacturer will incur the expense of such testing and the AHJ may immediately revoke, modify, or suspend the use of such product or material within their jurisdiction. BORA reserves the right to revoke this acceptance, if it is determined by Miami–Dade County Product Control Division that this product or material fails to meet the requirements of the applicable building code.

This product is approved as described herein, and has been designed to comply with the Florida Building Code, including the High Velocity Hurricane Zone.

DESCRIPTION: Series "Model 44: Performance II" Aluminum Sliding Glass Door – L.M.I.

APPROVAL DOCUMENT: Drawing No. **W04-55,** titled "Model 44 Performance II Alum. S.G. Door", sheets 1 through 7 of 7, prepared by Al–Farooq Corporation, dated 06/15/04 and last revised on May 10, 2009, signed and sealed by Arshad Viqar, P. E., bearing the Miami–Dade County Product Control Renewal stamp with the Notice of Acceptance number and expiration date by the Miami–Dade County Product Control Division.

MISSILE IMPACT RATING: Large and Small Missile Impact Resistant

Limitation: 1. Anchor max. O.C. spacing at jambs not to exceed 5-1/2" for ½" shim space.

LABELING: Each unit shall bear a permanent label with the manufacturer's name or logo, city, state and following statement: "Miami–Dade County Product Control Approved", unless otherwise noted herein.

RENEWAL of this NOA shall be considered after a renewal application has been filed and there has been no change in the applicable building code negatively affecting the performance of this product.

TERMINATION of this NOA will occur after the expiration date or if there has been a revision or change in the materials, use, and/or manufacture of the product or process. Misuse of this NOA as an endorsement of any product, for sales, advertising or any other purposes shall automatically terminate this NOA. Failure to comply with any section of this NOA shall be cause for termination and removal of NOA.

ADVERTISEMENT: The NOA number preceded by the words Miami–Dade County, Florida, and followed by the expiration date may be displayed in advertising literature. If any portion of the NOA is displayed, then it shall be done in its entirety.

INSPECTION: A copy of this entire NOA shall be provided to the user by the manufacturer or its distributors and shall be available for inspection at the job site at the request of the Building Official.

This NOA **renews NOA No. 09-0519.17** and consists of this page 1 and evidence pages E–1, as well as approval document mentioned above.

The submitted documentation was reviewed by **Ishaq I. Chanda, P. E.**

MIAMI-DADE COUNTY APPROVED

9/27/10

NOTICE OF ACCEPTANCE: EVIDENCE SUBMITTED

A. DRAWINGS (transferred from file **#09-0519.17**)

1. Manufacturer's die drawings and sections.
2. Drawing No. **W04-55,** titled "Model 44 Performance II Alum. S.G. Door", sheets 1 through 7 of 7, prepared by Al–Farooq Corporation, dated 06/15/04 and last revised on May 10, 2009, signed and sealed by Arshad Viqar, P. E.

B. TESTS: (transferred from file **#09-0519.17**). Original test conducted per SFBC, protocol 201, 202 & 203-94, now termed as FBC, TAS 201, 202 &203-94:

1. Test reports on 1) Air Infiltration Test, per SFBC, PA 202-94
   2) Uniform Static Air Pressure Test, Loading per PA 202-94
   3) Water Resistance Test, per SFBC, PA 202-94
   4) Large Missile Impact Test per SFBC, PA 201-94
   5) Small Missile Impact Test per SFBC, PA 201-94
   6) Cyclic Wind Pressure Loading per SFBC, PA 203-94
   7) Forced Entry Test, per SFBC 3603.2 (b) and PA 202-94

   along with marked-up drawings and installation diagram of an aluminum sliding glass door, prepared by Hurricane Test Laboratory, Inc., Test Report No. **HTL –0073-0101-00**, dated November 12-29-99 thru 02-07-00, signed and sealed by Vinu Abraham, P.E.
2. Test reports on 1) Large Missile Impact Test per SFBC, PA 201-94
   2) Cyclic Wind Pressure Loading per SFBC, PA 203-94

   along with marked-up drawings and installation diagram of aluminum SGD, prepared by American Testing Lab of South Florida, Test Reports No(s). **ATL –00011** dated 06-13-00, and **ATL –1210.01-00** dated 01-23-01, both signed and sealed by William R. Mehner, P.E.

C. CALCULATIONS (transferred from file # **09-0519.17**)

1. Anchor verification calculations and structural analysis, complying w/ FBC–2007, prepared by Al–Farooq Corp., dtd 04/29/09, signed & sealed by Arshad Viqar, P. E.
2. Glazing complies with ASTM E1300-02 &-04.

D. QUALITY ASSURANCE

1. Miami Dade Building Code Compliance Office (BCCO).

E. MATERIAL CERTIFICATIONS

1. Notice of Acceptance No. **09-0312.03** issued to E.I. DuPont DeNemours & Co., Inc. for their "**DuPont Sentry Glass® Interlayer**", expiring on 01/14/12
2. Notice of Acceptance No. **06–1116.07** issued to Global Security Glazing for their "**Chem.–Tem (R) Chemically Strengthened Glass**", expiring on 07/18/12.
3. Notice of Acceptance No. **10-0201.01** issued to Viracon, Inc. for their "**HRG-2 Glass Interlayer**", expiring on 02/12/14.

F. STATEMENTS

1. Statement letter of conformance & "No financial interest", prepared by Al–Farooq Corporation, dated 04/24/09, signed and sealed by Arshad Viqar, P. E.
2. Testing agreement letter, dated 06/11/2009 between American Test Lab of South Florida (ATL) and Crawford Glass Company, Inc., issued by ATL.
3. Lab compliance, part of the above test reports.

G. OTHER

1 This **renews** one year conditional approval for NOA# **09-0519.17**, expiring on June20, 2011.

Ishaq I. Chanda

Ishaq I. Chanda, P. E.
Product Control Examiner
NOA No. 10-0830.03
Expiration Date: June 20, 2011
Approval Date: October 20, 2010

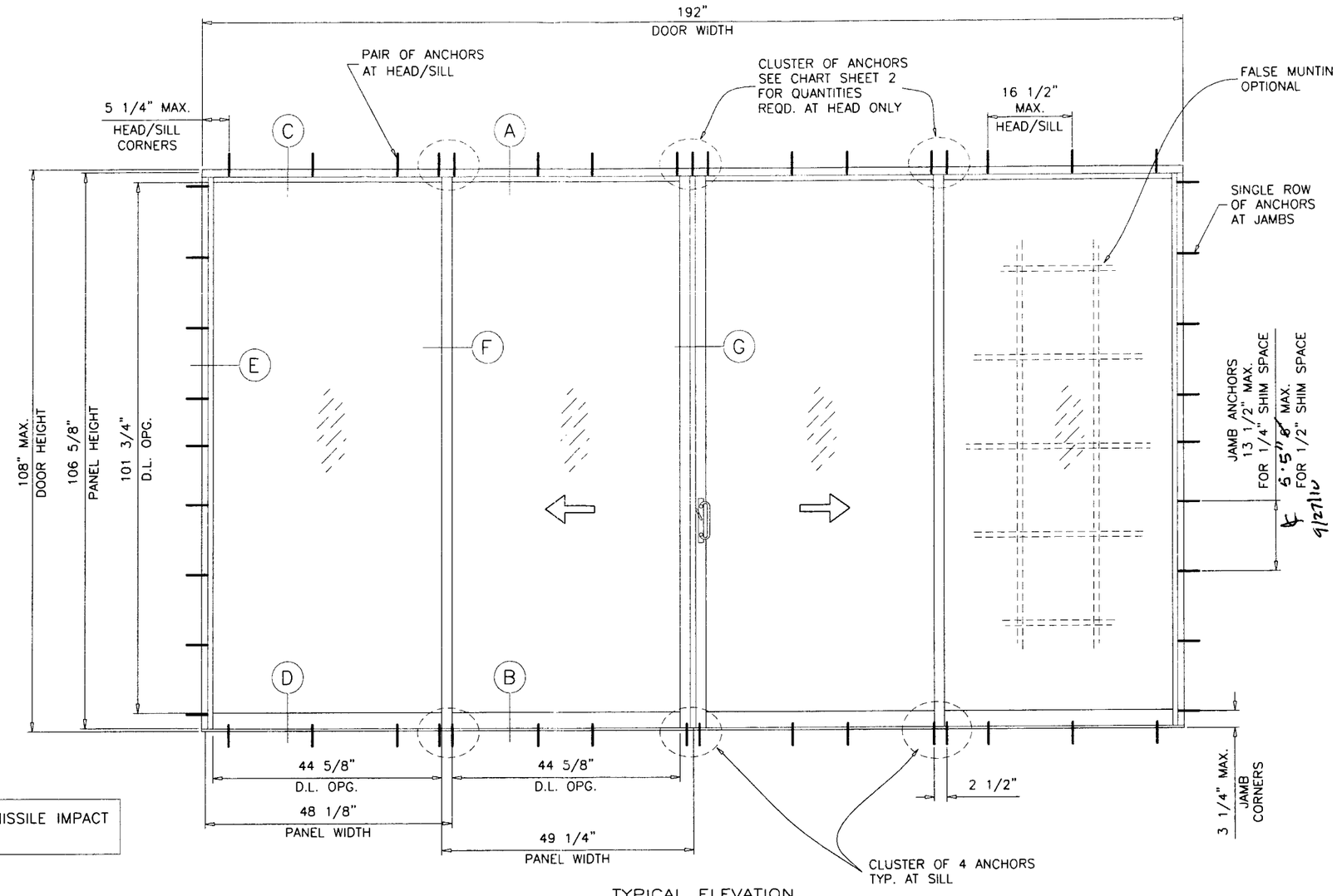

TYPICAL ELEVATION
TESTED UNIT

THESE DOORS ARE RATED FOR LARGE & SMALL MISSILE IMPACT AND REQUIRE NO SHUTTERS.

MODEL 44 (L.M.I.)
PERFORMANCE II ALUMINUM SLIDING GLASS DOOR

DESIGN LOAD RATING FOR DOORS TO BE AS PER CHARTS SHOWN ON SHEET 2.

THIS PRODUCT HAS BEEN DESIGNED AND TESTED TO COMPLY WITH THE REQUIREMENTS OF THE FLORIDA BUILDING CODE 2004/2007 EDITION INCLUDING HIGH VELOCITY HURRICANE ZONE (HVHZ).

WOOD BUCKS BY OTHERS, MUST BE ANCHORED PROPERLY TO TRANSFER LOADS TO THE STRUCTURE.

ANCHORS SHALL BE AS LISTED, SPACED AS SHOWN ON DETAILS, ANCHORS EMBEDMENT TO BASE MATERIAL SHALL BE BEYOND WALL DRESSING OR STUCCO.

ANCHORING OR LOADING CONDITIONS NOT SHOWN IN THESE DETAILS ARE NOT PART OF THIS APPROVAL.

A LOAD DURATION INCREASE IS USED IN DESIGN OF ANCHORS INTO WOOD ONLY.

MATERIALS INCLUDING BUT NOT LIMITED TO STEEL/METAL SCREWS, THAT COME INTO CONTACT WITH OTHER DISSIMILAR MATERIALS SHALL MEET THE REQUIREMENTS OF 2004/2007 FLORIDA BLDG. CODE SECTION 2003.8.4.

GLASS DLO HEIGHT = DOOR HEIGHT − 6.250
GLASS DLO WIDTH = PANEL WIDTH − 3.375

PRODUCT RENEWED
as complying with the Florida Building Code
Acceptance No. 10-0830.03
Expiration Date JUNE 20, 2011
By Shaq I. Chund
Miami Dade Product Control Division

Engr. ARSHAD VIQAR
CIVIL
FLA. PE # 38863
C.A.N. 3538
MAY 01 2009

PRODUCT REVISED
as complying with the Florida Building Code
Acceptance No. 09-0519.17
Expiration Date June 20, 2010
By
Miami Dade Product Control Division

AL-FAROOQ CORPORATION
ENGINEERS & PRODUCT DEVELOPMENT
1235 S.W. 87 AVE
MIAMI, FLORIDA 33174
TEL. (305) 264-8100 FAX. (305) 262-6978
COMP-ANL\W04-55CTC

CRAWFORD GLASS DOOR COMPANY, INC.
3301 S.W. 13TH DRIVE, SUITE B
DEERFIELD BEACH, FL. 33442-8101
TEL. (954) 480-6820 FAX. (954) 480-6814

MODEL 44 PERFORMANCE II ALUM S.G. DOOR (L.M.I.)

revisions:

no	date	by	description
A	12.16.04		REV. PER BCCO COMMENTS
B	04.27.09		UPDATED FOR 2007 FBC

date: 06-15-04
scale: 1/2"=1'-0"
dr. by: HAMID
chk. by:

drawing no. W04-55

sheet 1 of 7

DESIGN LOAD CAPACITY – PSF

PANEL WIDTH NOMINAL INCHES	DOOR HEIGHT INCHES	GLASS TYPE 'A' & 'B'								GLASS TYPE 'C'							
		CLUSTER OF 4 ANCHORS				CLUSTER OF 6 ANCHORS				CLUSTER OF 4 ANCHORS				CLUSTER OF 6 ANCHORS			
		ANCHORS TYPE 'A', 'C' & 'D'		ANCHOR TYPE 'B'		ANCHORS TYPE 'A', 'C' & 'D'		ANCHOR TYPE 'B'		ANCHORS TYPE 'A', 'C' & 'D'		ANCHOR TYPE 'B'		ANCHORS TYPE 'A', 'C' & 'D'		ANCHOR TYPE 'B'	
		EXT.(+)	INT.(−)	EXT.(+)	INT.(−)	EXT.(+)	INT.(−)	EXT.(+)	INT.(−)	EXT.(+)	INT.(−)	EXT.(+)	INT.(−)	EXT.(+)	INT.(−)	EXT.(+)	INT.(−)
30	80"	93.3	94.0	93.3	94.0	93.3	94.0	93.3	94.0	75.0	75.0	75.0	75.0	75.0	75.0	75.0	75.0
36		93.3	94.0	93.3	94.0	93.3	94.0	93.3	94.0	75.0	75.0	75.0	75.0	75.0	75.0	75.0	75.0
42		93.3	94.0	93.3	94.0	93.3	94.0	93.3	94.0	75.0	75.0	75.0	75.0	75.0	75.0	75.0	75.0
48		93.3	94.0	90.4	90.4	93.3	94.0	93.3	94.0	75.0	75.0	75.0	75.0	75.0	75.0	75.0	75.0
54		88.6	88.6	84.9	84.9	93.3	94.0	93.3	94.0	75.0	75.0	75.0	75.0	75.0	75.0	75.0	75.0
60		84.5	84.5	81.0	81.0	93.3	94.0	93.3	94.0	75.0	75.0	75.0	75.0	75.0	75.0	75.0	75.0
30	84"	93.3	94.0	93.3	94.0	93.3	94.0	93.3	94.0	75.0	75.0	75.0	75.0	75.0	75.0	75.0	75.0
36		93.3	94.0	93.3	94.0	93.3	94.0	93.3	94.0	75.0	75.0	75.0	75.0	75.0	75.0	75.0	75.0
42		93.3	94.0	91.9	91.9	93.3	94.0	93.3	94.0	75.0	75.0	75.0	75.0	75.0	75.0	75.0	75.0
48		88.0	88.0	84.4	84.4	93.3	94.0	93.3	94.0	75.0	75.0	75.0	75.0	75.0	75.0	75.0	75.0
54		82.3	82.3	79.0	79.0	93.3	94.0	93.3	94.0	75.0	75.0	75.0	75.0	75.0	75.0	75.0	75.0
60		78.2	78.2	75.0	75.0	93.3	94.0	93.3	94.0	75.0	75.0	75.0	75.0	75.0	75.0	75.0	75.0
30	90"	93.3	94.0	93.3	94.0	93.3	94.0	93.3	94.0	75.0	75.0	75.0	75.0	75.0	75.0	75.0	75.0
36		93.3	94.0	93.3	93.8	93.3	94.0	93.3	94.0	75.0	75.0	75.0	75.0	75.0	75.0	75.0	75.0
42		87.5	87.5	83.9	83.9	93.3	94.0	93.3	94.0	75.0	75.0	75.0	75.0	75.0	75.0	75.0	75.0
48		80.0	80.0	76.7	76.7	93.3	94.0	93.3	94.0	75.0	75.0	75.0	75.0	75.0	75.0	75.0	75.0
54		74.5	74.5	71.4	71.4	93.3	94.0	93.3	94.0	74.5	74.5	71.4	71.4	75.0	75.0	75.0	75.0
30	96"	93.3	94.0	93.3	94.0	93.3	94.0	93.3	94.0	75.0	75.0	75.0	75.0	75.0	75.0	75.0	75.0
36		90.3	90.3	86.6	86.6	93.3	94.0	93.3	94.0	75.0	75.0	75.0	75.0	75.0	75.0	75.0	75.0
42		80.5	80.5	77.2	77.2	93.3	94.0	93.3	94.0	75.0	75.0	75.0	75.0	75.0	75.0	75.0	75.0
48		73.3	73.3	70.3	70.3	93.3	94.0	93.3	94.0	73.3	73.3	70.3	70.3	75.0	75.0	75.0	75.0
54		68.0	68.0	65.2	65.2	93.3	94.0	93.3	94.0	68.0	68.0	65.2	65.2	75.0	75.0	75.0	75.0
30	102"	93.3	94.0	93.1	93.1	93.3	94.0	93.3	94.0	75.0	75.0	75.0	75.0	75.0	75.0	75.0	75.0
36		83.8	83.8	80.4	80.4	93.3	94.0	93.3	94.0	75.0	75.0	75.0	75.0	75.0	75.0	75.0	75.0
42		74.5	74.5	71.4	71.4	93.3	94.0	93.3	94.0	74.5	74.5	71.4	71.4	75.0	75.0	75.0	75.0
48		67.7	67.7	64.9	64.9	93.3	94.0	93.3	94.0	67.7	67.7	64.9	64.9	75.0	75.0	75.0	75.0
30	108"	90.8	90.8	87.1	87.1	93.3	94.0	93.3	94.0	75.0	75.0	75.0	75.0	75.0	75.0	75.0	75.0
36		78.2	78.2	75.0	75.0	93.3	94.0	93.3	94.0	75.0	75.0	75.0	75.0	75.0	75.0	75.0	75.0
42		69.4	69.4	66.5	66.5	93.3	94.0	93.3	94.0	69.4	69.4	66.5	66.5	75.0	75.0	75.0	75.0
48		62.9	62.9	60.3	60.3	93.3	94.0	90.4	90.4	62.9	62.9	60.3	60.3	75.0	75.0	75.0	75.0

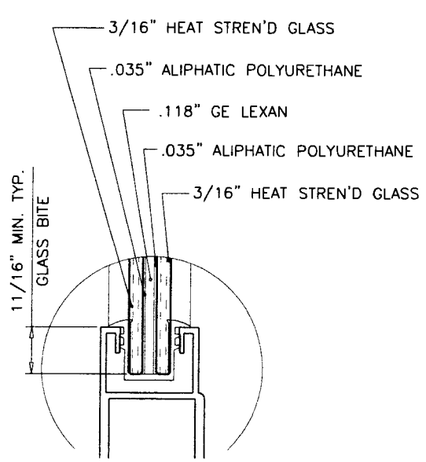

GLASS TYPE 'A'
9/16" NOM. GLOBE AMERADA WINDPANE

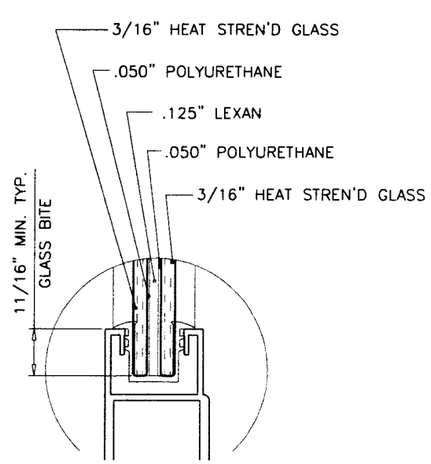

GLASS TYPE 'B'
9/16" NOM. 'HRG-2' BY VIRACON

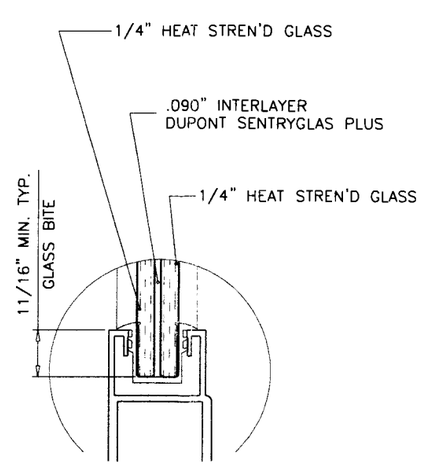

GLASS TYPE 'C'
BY VIRACON

PRODUCT RENEWED
as complying with the Florida Buiding Code
Acceptance No 10-0830.03
Expiration Date JUNE 20, 2011
By
Miami-Dade Product Control Division

NOTE:
GLASS CAPACITIES ON THIS SHEET ARE BASED ON ASTM E1300-02/04 (3 SEC. GUSTS) AND FLORIDA BUILDING COMMISSION DECLARATORY STATEMENT DCA05-DEC-219

Engr: ARSHAD VIQAR
CIVIL
FLA. PE # 39863
C.A.N. 3538

MAY 01 2009

PRODUCT REVISED
as complying with the Florida Building Code
Acceptance No 09-0519.17
Expiration Date June 20, 2010
By
Miami-Dade Product Control Division

AL-FAROOQ CORPORATION
ENGINEERS & PRODUCT DEVELOPMENT
1235 S.W. 87 AVE
MIAMI, FLORIDA 33174
TEL. (305) 264-8100 FAX. (305) 262-6978

COMP-ANL\W04-55CTC

MODEL 44 PERFORMANCE II ALUM S.G. DOOR (L.M.I.)

CRAWFORD GLASS DOOR COMPANY, INC.
3301 S.W. 13TH DRIVE, SUITE B
DEERFIELD BEACH, FL. 33442-8101
TEL. (954) 480-6820 FAX. (954) 480-6814

revisions:

no	date	by	description
A	12.16.04		REV. PER BCCO COMMENTS
B	04.27.09		UPDATED FOR 2007 FBC

date: 06-15-04
scale: 1/2" = 1"
dr. by: HAMID
chk. by:

drawing no. W04-55

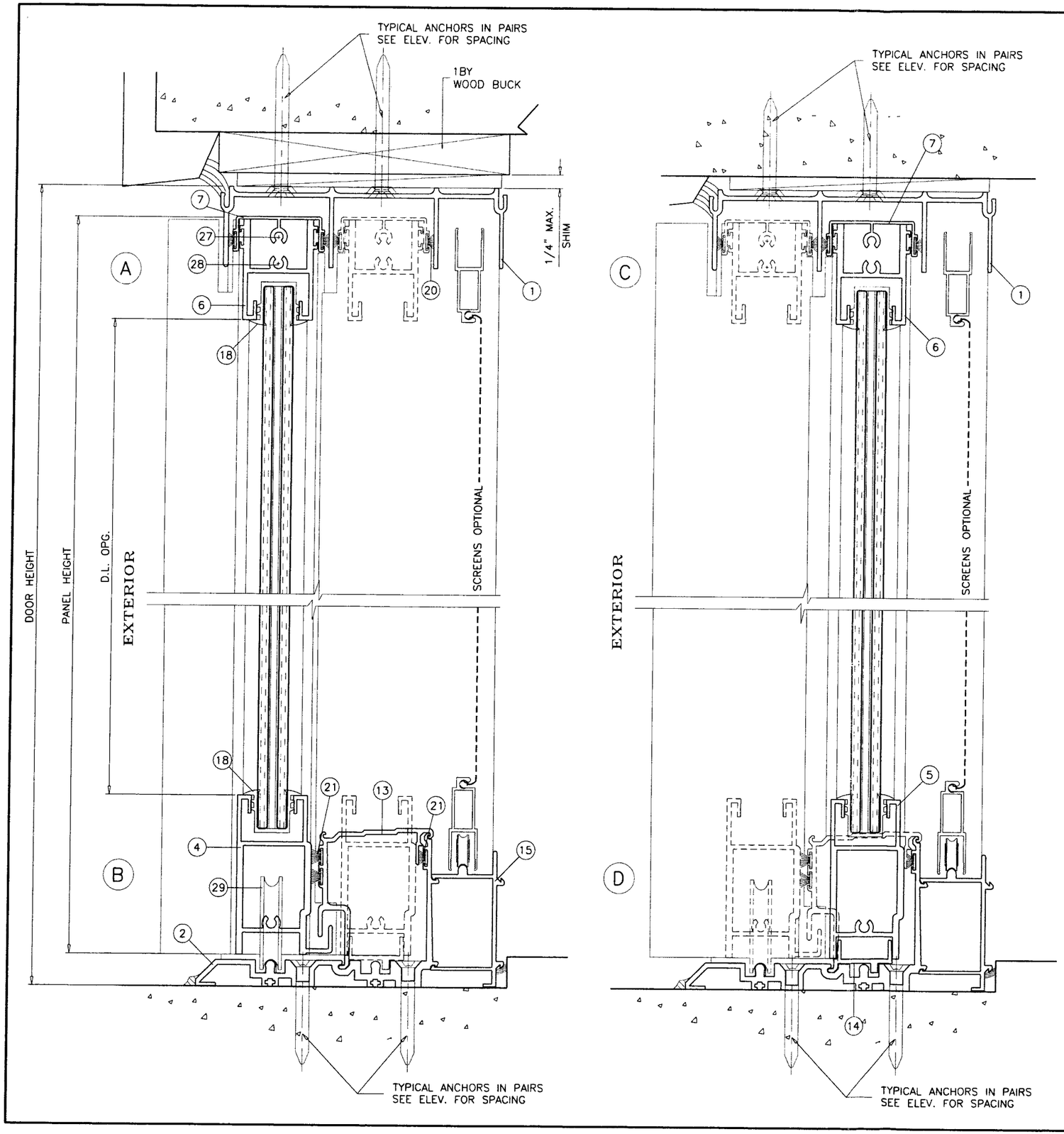

PRODUCT RENEWED
as complying with the Florida
Building Code
Acceptance No 10-0830.03
Expiration Date JUNE 20, 2011
By Ishaq I. Chaudhary
Miami Dade Product Control
Division

Engr: ARSHAD VIQAR
CIVIL
FLA. PE # 38863
C.A.N. 3538

MAY 01 2009

PRODUCT REVISED
as complying with the Florida
Building Code
Acceptance No 09-0519.17
Expiration Date June 20, 2010
By
Miami Dade Product Control
Division

AL-FAROOQ CORPORATION
ENGINEERS & PRODUCT DEVELOPMENT
1235 S.W. 87 AVE
MIAMI, FLORIDA 33174
TEL. (305) 264-8100 FAX. (305) 262-6978
COMP-ANL\W04-55CTC

MODEL 44 PERFORMANCE II ALUM S.G. DOOR (L.M.I.)

CRAWFORD GLASS DOOR COMPANY, INC.
3301 S.W. 13TH DRIVE, SUITE B
DEERFIELD BEACH, FL. 33442-8101
TEL. (954) 480-6820 FAX. (954) 480-6814

revisions:

no	date	by	description
A	12.16.04		REV. PER BCCO COMMENTS
B	04.27.09		UPDATED FOR 2007 FBC

date: 06-15-04
scale: 1/2" = 1"
dr. by: HAMID
chk. by:

drawing no.
W04-55

sheet 3 of 7

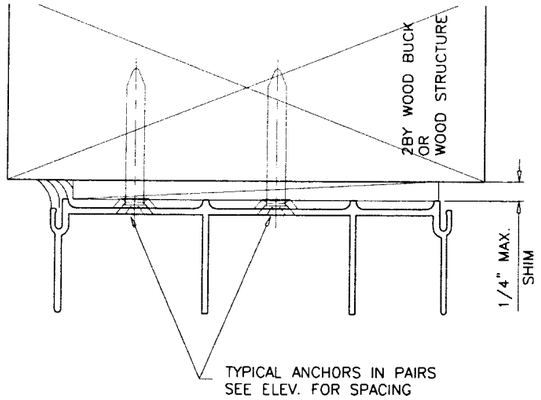

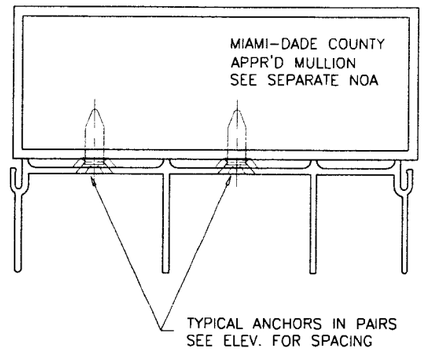

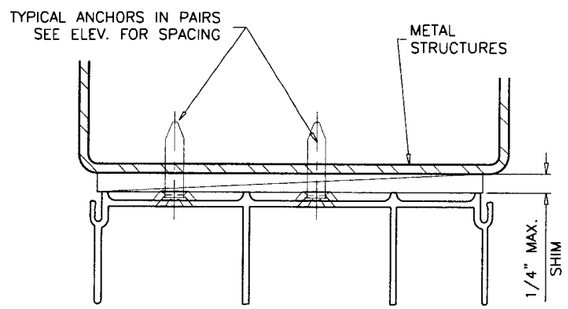

ITEM NO.	PART NUMBER	QUANTITY	DESCRIPTION	MATERIAL	MANF./SUPPLIER/REMARKS
1	128	1	FRAME HEAD	6063-T6	-
2	223A	1	FRAME SILL	6063-T6	-
3	329	2	FRAME JAMB	6063-T6	-
4	501	1/MOV. PANEL	MOVING HORIZ. BOTT. RAIL	6063-T6	-
5	500	1/FIX. PANEL	FIXED HORIZ. BOTT. RAIL	6063-T6	-
6	401	1/ PANEL	TOP RAIL	6063-T6	-
7	402	1/ PANEL	TOP RAIL CAP	6063-T6	-
8	641	1	JAMB FIX. STILE	6063-T6	-
9	631	1/ PANEL	INTERIOR INTERLOCK	6063-T6	-
10	633	1/ PANEL	EXTERIOR INTERLOCK	6063-T6	-
11	613	1	MALE ASTRAGAL STILE	6063-T6	-
12	623	1	FEMALE ASTRAGAL STILE	6063-T6	-
13	253	1	THRESHOLD COVER	6063-T6	-
14	250	-	FIX. PANEL SEAT	6063-T6	-
15	283	AS REQD.	SCREEN TRACK	6063-T6	-
16	-	-	JAMB ANCHOR SHEAR PLATE	ALUMINUM	1/8" X 1-3/4"
18	145L	AS REQD.	GLAZING GASKET	VINYL	NORTH GEORGIA EXTRUDERS
19	WVC3068	-	BULB W'STRIPPING	VINYL	WIBORG
20	43622-270	AS REQD.	TOP RAIL W'STRIPPING	PILE	AMESBURY
21	43634-270	AS REQD.	SILL & SILL COVER W'STRIPPING	PILE	AMESBURY
22	43626-270	AS REQD.	VERTICAL W'STRIPPING	PILE	AMESBURY
27	#10 X 1/2"	1/ CORNER	TOP RAIL COVER ASSY. SCREWS	ST/ST	-
28	#12 X 1"	1/ CORNER	PANEL ASSY. SCREWS	ST/ST	-
29	TA39	2/MOV. PANEL	TANDEM WHEEL ASSEMBLY	ST/ST	REFLECTOLITE
30	MS1847-09	1	STANDARD LOCK	ST/ST	ADAMS RITE

TYPICAL ANCHORS: SEE ELEV. FOR SPACING

TYPE 'A'- 1/4" DIA. ST/ST TAPPERS BY 'RAWL'
INTO 2BY WOOD BUCKS OR WOOD STRUCTURES
1-1/2" MIN. PENETRATION INTO WOOD

THRU 1BY WOOD BUCKS INTO
3000 PSI MIN. CONC. AT HEAD/SILL
C-90 GROUT FILLED BLOCK AT JAMBS
1-1/2" MIN. EMBED INTO CONC. OR MASONRY

TYPE 'B'- 1/4" DIA. ST/ST TAPPERS BY 'RAWL'
DIRECTLY INTO
3000 PSI MIN. CONC. AT HEAD/SILL
C-90 GROUT FILLED BLOCK AT JAMBS
1-1/2" MIN. EMBED INTO CONC. OR MASONRY

TYPE 'C'- 1/4" DIA. SELF DRILLING SCREWS (GRADE 5 CRS)
INTO METAL STRUCTURES (STEEL OR ALUMINUM 1/8" MIN. THICK.)
STEEL : Fy = 36 KSI MIN.
ALUMINUM : 6063-T5 MIN.
(STEEL IN CONTACT WITH ALUMINUM TO BE PLATED OR PAINTED)

TYPE 'D'- #14 SMS (MIN. Fu=74000 PSI, MIN. Fy=57000 PSI)
INTO MIAMI-DADE COUNTY APPROVED MULLIONS
(MIN. 1/8" THK. ALUMINUM 6063-T5)
(NO SHIM SPACE)

TYPICAL EDGE DISTANCE
INTO CONCRETE AND MASONRY = 3" MIN.
INTO WOOD STRUCTURE = 1" MIN.

WOOD BUCKS AND METAL STRUCTURES NOT BY CRAWFORD MUST SUSTAIN LOADS IMPOSED BY GLAZING SYSTEM AND TRANSFER THEM TO THE BUILDING STRUCTURE.

Engr: ARSHAD VIQAR
CIVIL
FLA. PE # 38863
C.A.N. 3538

MAY 01 2009

PRODUCT RENEWED
as complying with the Florida
Buiding Code
Acceptance No 10-0830.03
Expiration Date June 20, 2011
By
Miami-Dade Product Control
Division

PRODUCT REVISED
as complying with the Florida
Building Code
Acceptance No 09-0519.17
Expiration Date June 20, 2010
By
Miami Dade Product Control
Division

AL-FAROOQ CORPORATION
ENGINEERS & PRODUCT DEVELOPMENT
1235 S.W. 87 AVE
MIAMI, FLORIDA 33174
TEL. (305) 264-8100 FAX. (305) 262-6978
COMP-ANL\W04-55CTC

MODEL 44 PERFORMANCE II ALUM S.C. DOOR (L.M.I.)

CRAWFORD GLASS DOOR COMPANY, INC.
3301 S.W. 13TH DRIVE, SUITE B
DEERFIELD BEACH, FL. 33442-8101
TEL. (954) 480-6814 FAX. (954) 480-6820

revisions:

no	date	by	description
A	12.16.04		REV. PER BCCO COMMENTS
B	04.27.09		UPDATED FOR 2007 FBC

date: 06-15-04
scale: 1/2" = 1"
dr. by: HAMID
chk. by:

drawing no.
W04-55

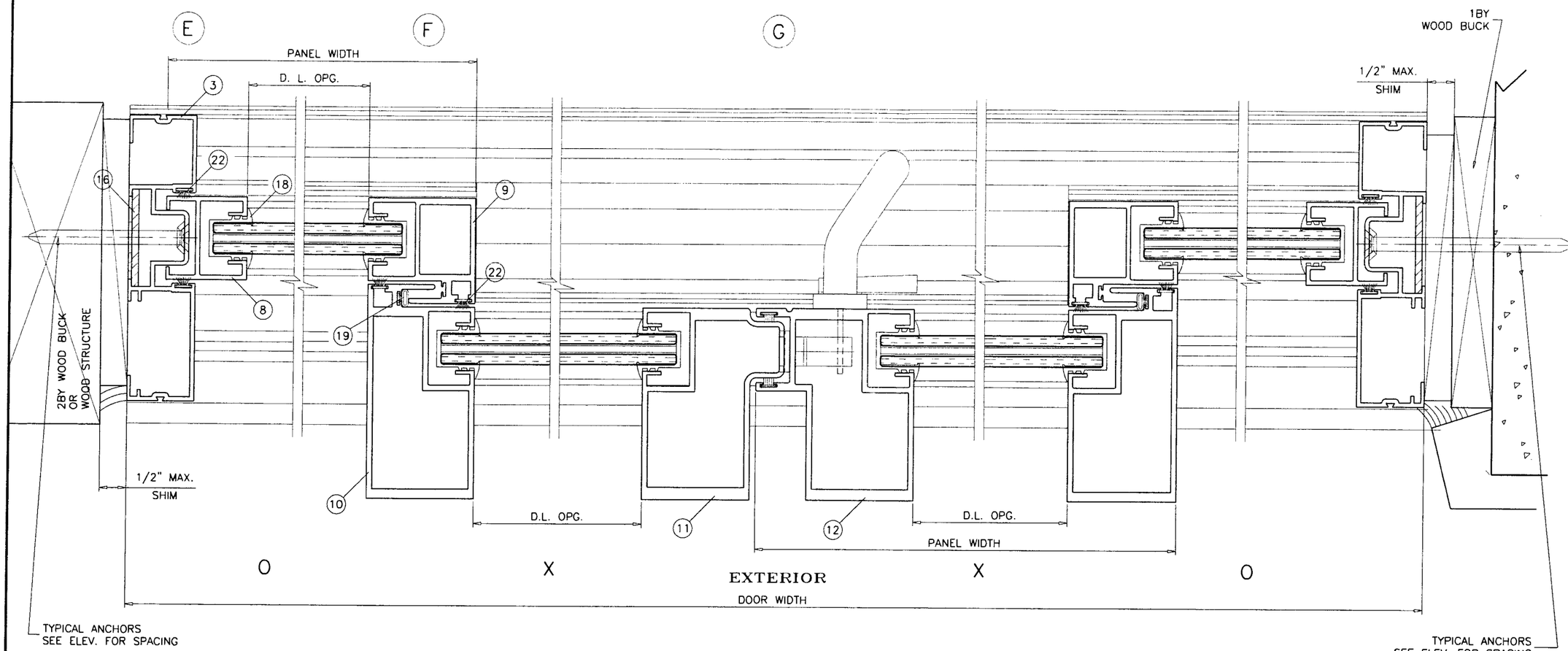

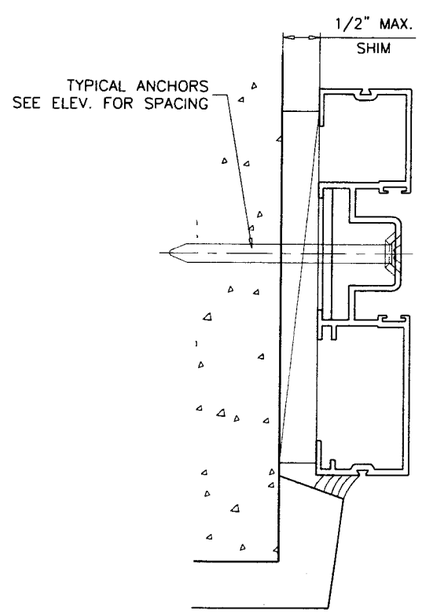

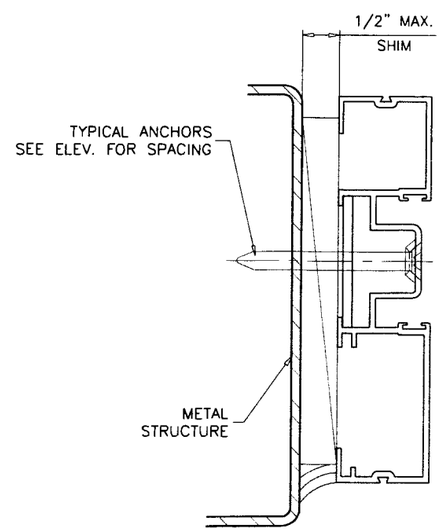

PRODUCT RENEWED
as complying with the Florida Building Code
Acceptance No 10-0830.03
Expiration Date June 20, 2011
By
Miami Dade Product Control Division

Engr.: ARSHAD VIQAR
CIVIL
FLA. PE # 38663
C.A.N. 3538

MAY 01 2009

PRODUCT REVISED
as complying with the Florida Building Code
Acceptance No 09-0519.17
Expiration Date June 20, 2010
By
Miami Dade Product Control Division

AL-FAROOQ CORPORATION
ENGINEERS & PRODUCT DEVELOPMENT
1235 S.W. 87 AVE
MIAMI, FLORIDA 33174
TEL. (305) 264-8100 FAX. (305) 262-6978
COMP-ANL\W04-55CTC

MODEL 44 PERFORMANCE II ALUM S.G. DOOR (L.M.I.)

CRAWFORD GLASS DOOR COMPANY, INC.
3301 S.W. 13TH DRIVE, SUITE B
DEERFIELD BEACH, FL. 33442-8101
TEL. (954) 480-6820 FAX. (954) 480-6814

revisions:

no	date	by	description
A	12.16.04		REV. PER BCCO COMMENTS
B	04.27.09		UPDATED FOR 2007 FBC

date: 06-15-04
scale: 1/2" = 1"
dr. by: HAMID
chk. by:

drawing no.
W04-55

sheet 5 of 7

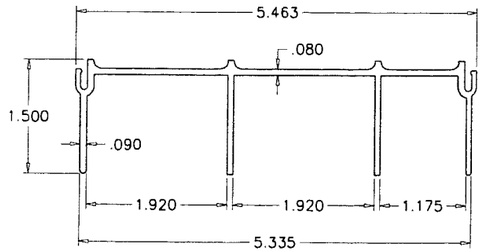

1 FRAME HEAD

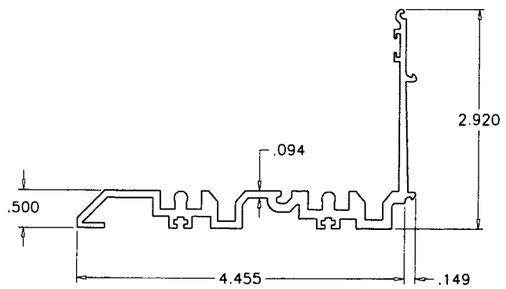

2 FRAME SILL

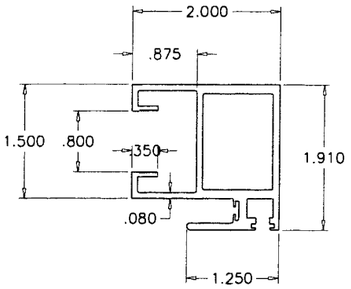

9 INTERIOR INTERLOCK

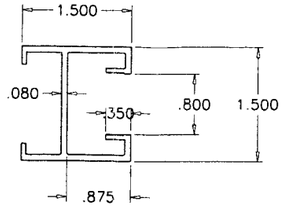

8 JAMB FIX. STILE

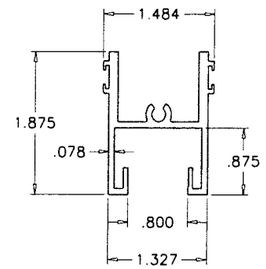

6 TOP RAIL

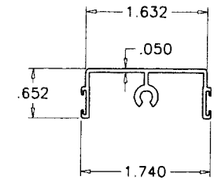

7 TOP RAIL CAP

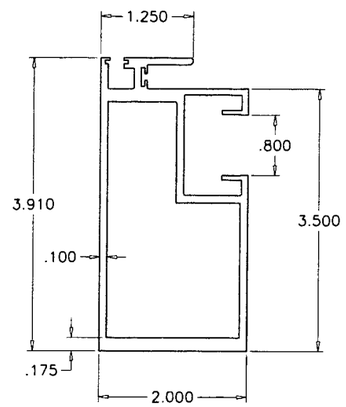

10 EXTERIOR INTERLOCK

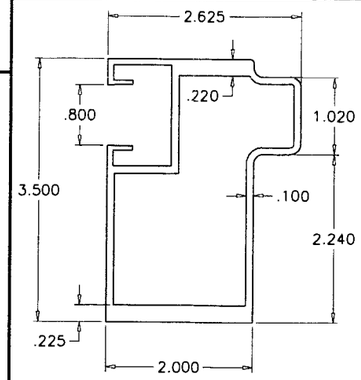

11 MALE ASTRAGAL STILE

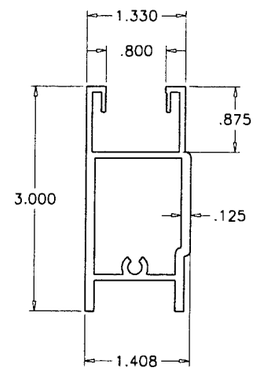

5 FIX. BOTTOM RAIL

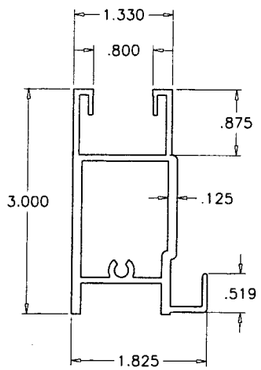

4 MOVING BOTTOM RAIL

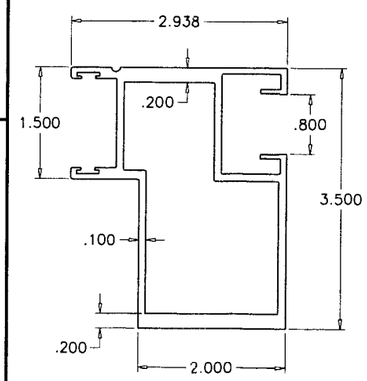

12 FEMALE ASTRAGAL STILE

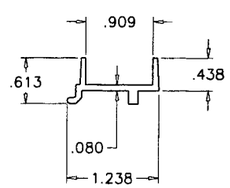

14 FIX. PANEL SEAT

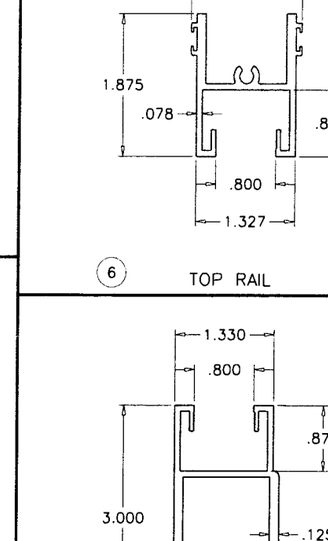

3 FRAME JAMB

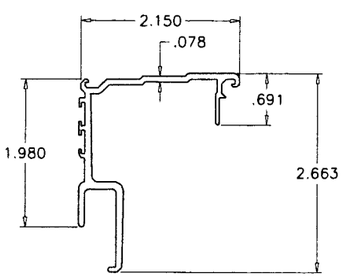

13 THRESHOLD COVER

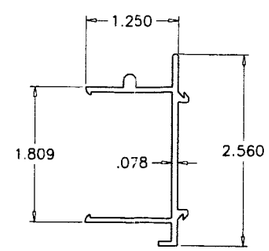

30 INSIDE SCREEN TRACK

PRODUCT RENEWED
as complying with the Florida Building Code
Acceptance No 10-0830-03
Expiration Date JUNE 20, 2011
By [signature]
Miami-Dade Product Control Division

Engr: ARSHAD VIQAR
CIVIL
FLA. PE # 38863
C.A.N. 3538

MAY 01 2009

PRODUCT REVISED
as complying with the Florida Building Code
Acceptance No 09-0519.17
Expiration Date June 20, 2010
By [signature]
Miami Dade Product Control Division

AL-FAROOQ CORPORATION
ENGINEERS & PRODUCT DEVELOPMENT
1235 S.W. 87 AVE
MIAMI, FLORIDA 33174
TEL. (305) 264-8100 FAX. (305) 262-6978

COMP-ANL\W04-55CTC

MODEL 44 PERFORMANCE II ALUM S.G. DOOR (L.M.I.)

CRAWFORD GLASS DOOR COMPANY, INC.
3301 S.W. 13TH DRIVE, SUITE B
DEERFIELD BEACH, FL. 33442-8101
TEL. (954) 480-6820 FAX. (954) 480-6814

revisions:

no	date	by	description
A	12.16.04		REV. PER BCCO COMMENTS
B	04.27.09		UPDATED FOR 2007 FBC

date: 06-15-04
scale: 1/2" = 1"
dr. by: HAMID
chk. by:

drawing no.
W04-55

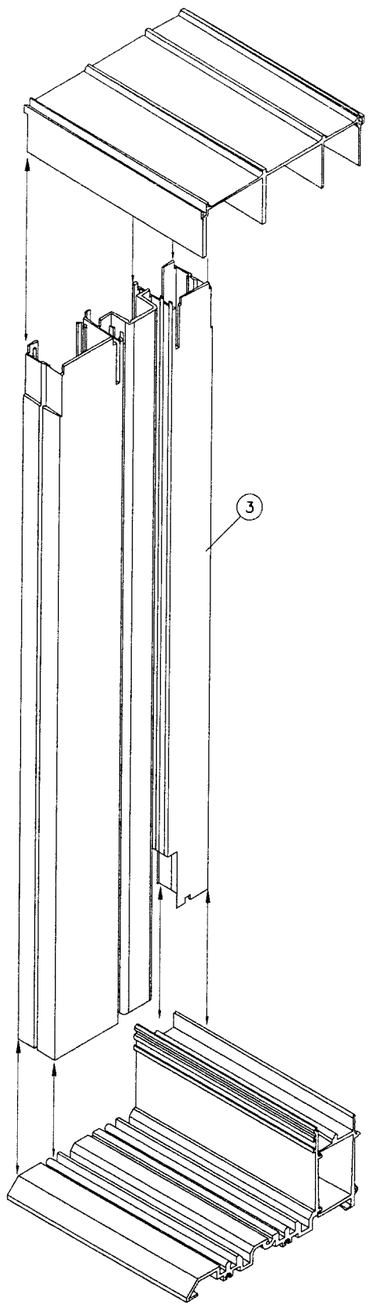

FRAME CORNER ASSEMBLY

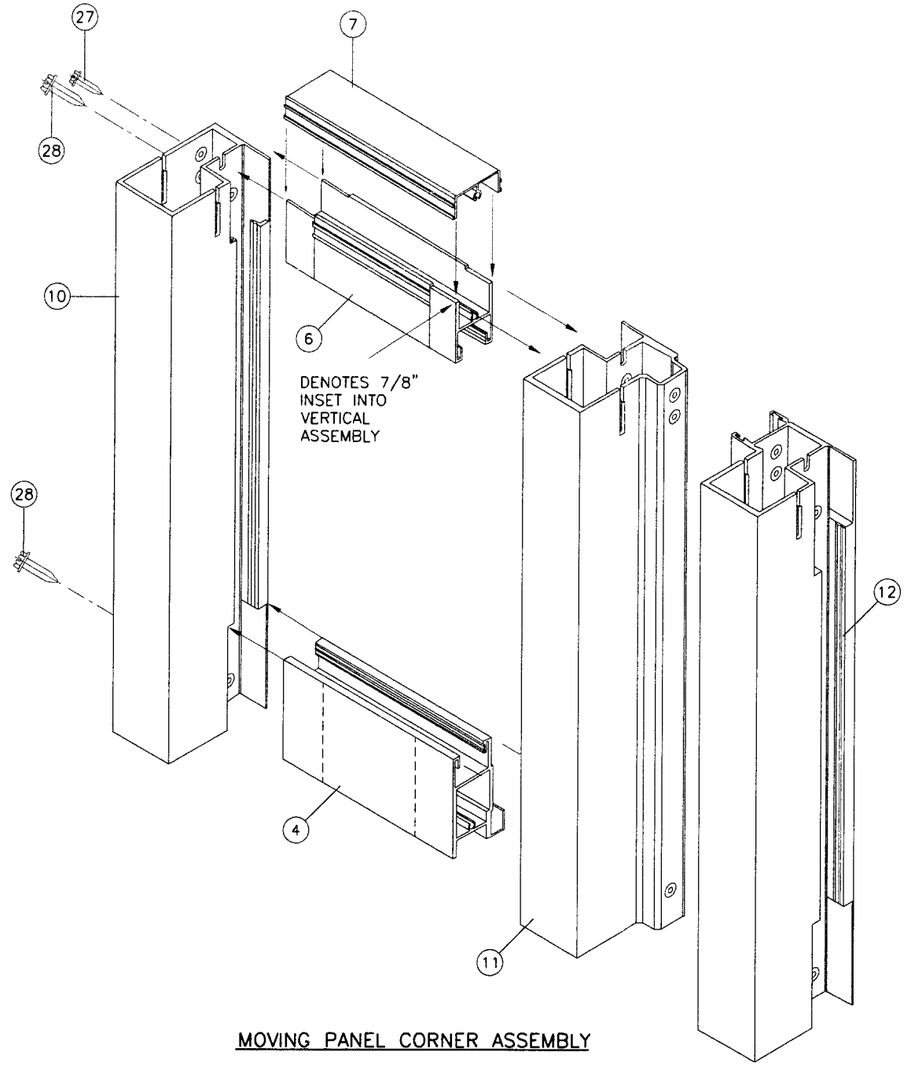

MOVING PANEL CORNER ASSEMBLY

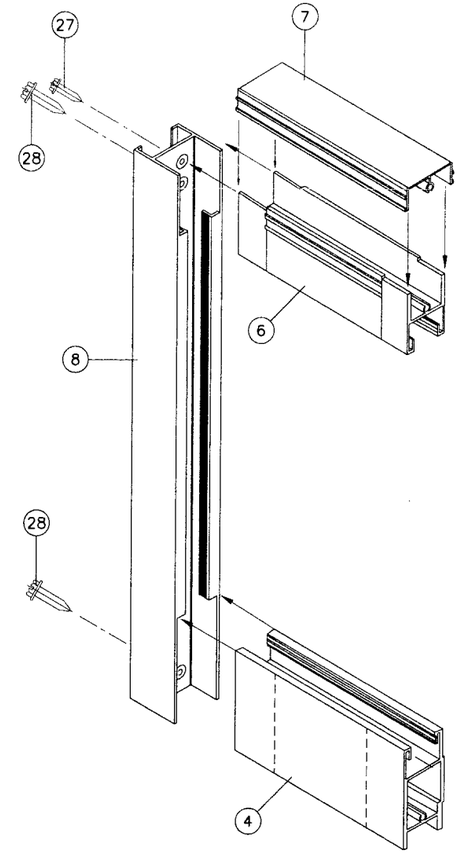

FIXED PANEL CORNER ASSEMBLY

SEALANT:

ALL JOINTS AND FRAME CONNECTIONS SEALED WITH TREMCO #116 VULKEM URETHANE ONE PART SEALANT.

Engr: ARSHAD WAQAR
CIVIL
FLA. PE # 38863
C.A.N. 3535

MAY 01 2009

PRODUCT RENEWED
as complying with the Florida
Building Code
Acceptance No. 10-0830.03
Expiration Date June 20, 2011
By
Miami Dade Product Control
Division

PRODUCT REVISED
as complying with the Florida
Building Code
Acceptance No. 09-0519.17
Expiration Date June 20, 2010
By
Miami Dade Product Control
Division

AL-FAROOQ CORPORATION
ENGINEERS & PRODUCT DEVELOPMENT
1235 S.W. 87 AVE
MIAMI, FLORIDA 33174
TEL. (305) 264-8100 FAX. (305) 262-6978

COMP-ANL\W04-55CTC

MODEL 44 PERFORMANCE II ALUM S.G. DOOR (L.M.I.)

CRAWFORD GLASS DOOR COMPANY, INC.
3301 S.W. 13TH DRIVE, SUITE B
DEERFIELD BEACH, FL. 33442-8101
TEL. (954) 480-6820 FAX. (954) 480-6814

revisions:

no	date	by	description
A	12.16.04		REV. PER BCCO COMMENTS
B	04.27.09		UPDATED FOR 2007 FBC

date: 06-15-04
scale: 1/2" = 1"
dr. by: HAMID
chk. by:

drawing no.
W04-55

sheet 7 of 7