MIAMI-DADE COUNTY
BUILDING CODE COMPLIANCE OFFICE (BCCO)
PRODUCT CONTROL DIVISION

MIAMI-DADE COUNTY, FLORIDA
METRO-DADE FLAGLER BUILDING
140 WEST FLAGLER STREET, SUITE 1603
MIAMI, FLORIDA 33130-1563
(305) 375-2901 FAX (305) 372-6339
www.miamidade.gov/buildingcode

NOTICE OF ACCEPTANCE (NOA)

Overhead Door Corporation
2501 South State Hwy 121, Suite 200
Lewisville, TX 75067

SCOPE: This NOA is being issued under the applicable rules and regulations governing the use of construction materials. The documentation submitted has been reviewed by Miami-Dade County Product Control Division and accepted by the Board of Rules and Appeals (BORA) to be used in Miami Dade County and other areas where allowed by the Authority Having Jurisdiction (AHJ).

This NOA shall not be valid after the expiration date stated below. The Miami-Dade County Product Control Division (In Miami Dade County) and/or the AHJ (in areas other than Miami Dade County) reserve the right to have this product or material tested for quality assurance purposes. If this product or material fails to perform in the accepted manner, the manufacturer will incur the expense of such testing and the AHJ may immediately revoke, modify, or suspend the use of such product or material within their jurisdiction. BORA reserves the right to revoke this acceptance, if it is determined by Miami-Dade County Product Control Division that this product or material fails to meet the requirements of the applicable building code.

This product is approved as described herein, and has been designed to comply with the Florida Building Code, including the High Velocity Hurricane Zone.

DESCRIPTION: Series 630/631/634 Steel Rolling Door 14'-0" Wide

APPROVAL DOCUMENT: Drawing No. **D-308231**, titled "Series 630/631/634 Rolling Fire Door 14' Dade County", Sheets 1 and 2 of 2, dated 09/23/09, with Revision B dated 08/25/10, prepared by Overhead Door Corporation, signed and sealed by LeRoy G. Krupke, P.E., bearing the Miami-Dade County Product Control revision stamp with the Notice of Acceptance number and expiration date by the Miami-Dade County Product Control Division.

MISSILE IMPACT RATING: Large and Small Missile Impact Resistant

LABELING: Each unit shall bear a permanent label with the manufacturer's name or logo, city, state and following statement: "Miami-Dade County Product Control Approved", unless otherwise noted herein.

RENEWAL of this NOA shall be considered after a renewal application has been filed and there has been no change in the applicable building code negatively affecting the performance of this product.

TERMINATION of this NOA will occur after the expiration date or if there has been a revision or change in the materials, use, and/or manufacture of the product or process. Misuse of this NOA as an endorsement of any product, for sales, advertising or any other purposes shall automatically terminate this NOA. Failure to comply with any section of this NOA shall be cause for termination and removal of NOA.

ADVERTISEMENT: The NOA number preceded by the words Miami-Dade County, Florida, and followed by the expiration date may be displayed in advertising literature. If any portion of the NOA is displayed, then it shall be done in its entirety.

INSPECTION: A copy of this entire NOA shall be provided to the user by the manufacturer or its distributors and shall be available for inspection at the job site at the request of the Building Official.

This NOA **revises NOA # 09-0826.05** and consists of this page 1 and evidence page E-1, as well as approval document mentioned above.

The submitted documentation was reviewed by **Carlos M. Utrera, P.E.**

MIAMI-DADE COUNTY APPROVED

11/03/10

NOA No. 10-0831.15
Expiration Date: December 02, 2014
Approval Date: November 24, 2010

NOTICE OF ACCEPTANCE: EVIDENCE SUBMITTED

A. DRAWINGS

1. Drawing No. **D-308231**, titled "Series 630/631/634 Rolling Fire Door 14' Dade County", Sheets 1 and 2 of 2, dated 09/23/09, with Revision B dated 08/25/10, prepared by Overhead Door Corporation, signed and sealed by LeRoy G. Krupke, P.E.

B. TESTS

1. Test reports on 1) Uniform Static Air Pressure Test, Loading per FBC, TAS 202-94
   2) Large Missile Impact Test per FBC, TAS 201-94
   3) Cyclic Wind Pressure Loading per FBC, TAS 203-94
   4) Forced Entry Test, per FBC 2411 3.2.1, TAS 202-94
   5) Tensile Test per ASTM E8-01,

   Along with marked-up drawings and installation diagram of Series/Model 630 Rolling Fire Doors, prepared by Architectural Testing, Inc., Test Report No. **89465.01-109-18**, dated 05/26/09, with Revision 1 dated 10/14/09, signed and sealed by Michael D. Stremmel, P.E. ***"Submitted under NOA # 09-0826.05"***
2. Test Report # **9100550287** on Salt Exposure Fog per ASTM B-117 on G30, G40 & G90 samples, prepared by Environmental Testing Laboratory dated 03/13/06 and signed by B. Richard. ***"Submitted under NOA # 05-1003.19"***

C. CALCULATIONS *"Submitted under NOA # 09-0826.05"*

1. Wall fastener calculations for Drawing D-308231-14' wide 630/631/634 Series Rolling Doors for 65 psf, Sheets 1 through 6 of 6, dated 08/21/09, prepared by Overhead Door Corporation, signed and sealed by LeRoy G. Krupke, P.E.

D. QUALITY ASSURANCE

1. Miami Dade Building Code Compliance Office (BCCO)

E. MATERIAL CERTIFICATIONS

1. None.

F. STATEMENTS *"Submitted under NOA # 09-0826.05"*

1. Statement letter of code conformance to FBC 2007 and no financial interest, issued by Overhead Door Corporation, dated 08/21/09, signed and sealed by LeRoy G. Krupke, P.E.
2. Statement letter of code conformance to FBC 2007, issued by Architectural Testing, Inc, dated 05/27/09, signed and sealed by Michael D. Stremmel, P.E.

11/03/10

Carlos M. Utrera, P.E.
Product Control Examiner
NOA No. 10-0831.15
Expiration Date: December 02, 2014
Approval Date: November 24, 2010

NOTES

1. (−W/L) = NEGATIVE WINDLOAD
   (+W/L) = POSITIVE WINDLOAD
2. WALL ANGLES MAY BE WELDED TO STEEL JAMB. USE MIN 60XX ELECTRODE SEE SHEET 2 FOR WELD DETAIL
3. RATED DESIGN LOAD ±65 PSF.
4. CURTAIN MATERIAL: ASTM A−653
   GUIDE MATERIAL: ASTM A−36
5. CURTAIN MATERIAL SHALL BE GALVANIZED ACCORDING TO ASTM A−525 TO G40 (MINIMUM).
6. THE DOOR MUST BE INSTALLED WITH THE TENSION WHEEL FACING THE INSIDE OF THE BUILDING.
7. SLIDE BOLTS MUST BE ENGAGED AND CHAIN MUST BE HOOKED WHEN HURRICANE WINDS ARE ANNOUNCED
8. WINDLOCK MATERIAL: LOW CARBON CAST STEEL, GRADE 70−46 (485−250) PER ASTM A27. MIN TENSILE 70−KSI MIN YIELD 36−KSI. MIN ELONG 22%
9. WINDLOCKS ATTACHED TO EACH SLAT (CONTINUOUS)
10. RIVET SPECIFICATIONS:
    1/4" DIAMETER RIVET, MINIMUM 1006 LOW−CARBON STEEL.
11. OPERATING (ROLL−UP) MECHANISM IS NOT INCLUDED IN THIS APPROVAL IT MUST BE CERTIFIED BY AN INDEPENDANT TESTING AGENCY, IF REQUIRED.

SHEET REVISION RECORD		
	2	1
	A	A

REVISIONS

LETTER	DESCRIPTION	DATE	APPROVAL
−	RFP PER ER 500195	9/23/09	SFT
A	REV PER ER 500300	2/3/2010	SFT
B	REV PER ER 500692	8/25/10	SFT

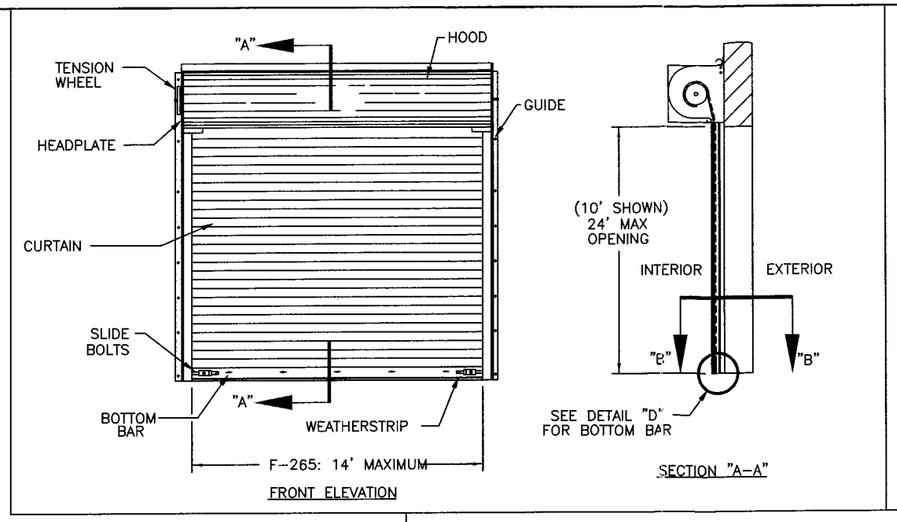

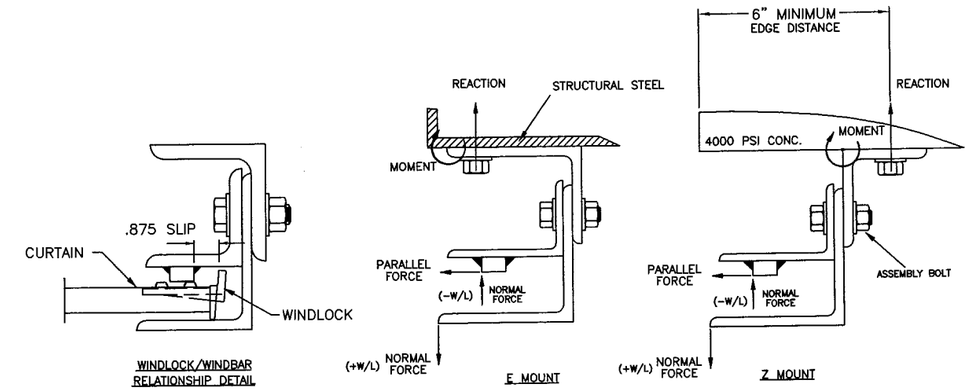

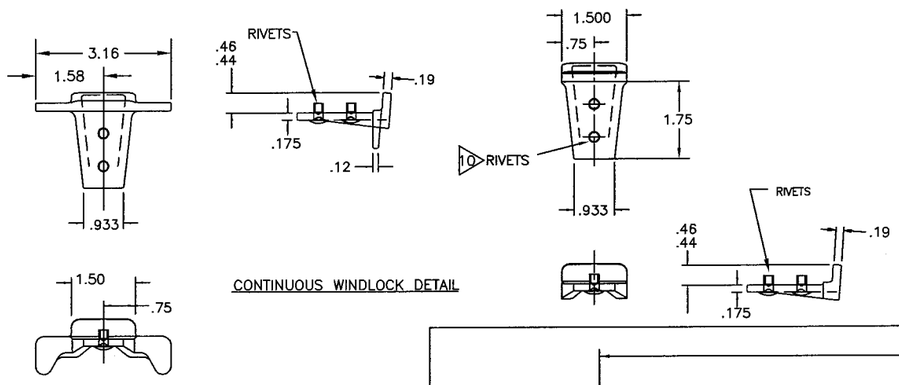

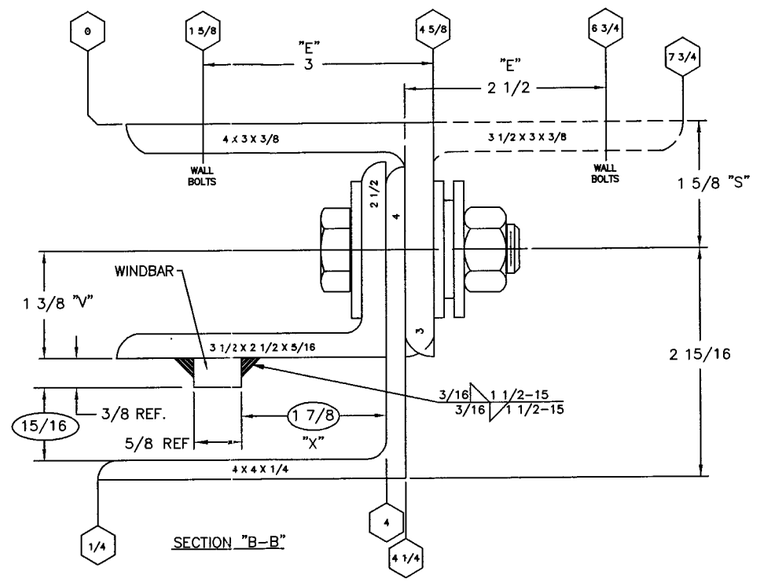

JAMB LOAD SUMMARY TABLE

LBS/FT DOOR HEIGHT	(E−MOUNT) LOADS	(Z−MOUNT) LOADS
REACTION	5271	6465
NORMAL	455	455
PARALLEL	1545	1545

FASTENER SUMMARY TABLE

	ASSEMBLY BOLT	WALL BOLT STEEL JAMB	WALL BOLT * CONCRETE JAMB
F−265	5/8" GRADE 5, 18" O.C.	1/2" GRADE 5, 12" O.C.	5/8", 4 " EMB POWERS WEDGE BOLT, OR 5/8" 4" EMB HILTI KWIK BOLT 3 8" O.C.

* 4000 PSI MINIMUM AND 6" EDGE DISTANCE FOR ANCHORS

PRODUCT REVISED
as complying with the Florida Building Code
Acceptance No 10-0831.15
Expiration Date 12/02/2014
By
Miami Dade Product Control Division

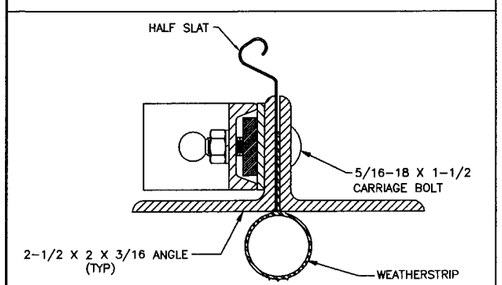

SECTION "C−C"

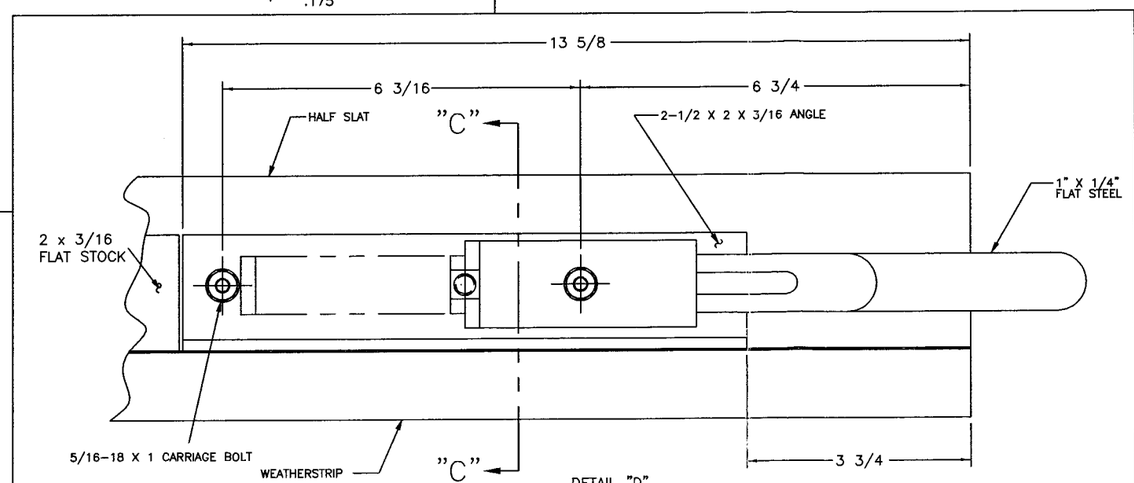

DETAIL "D"
BOTTOM BAR

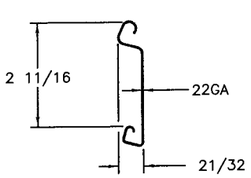

F−265 SLAT
GAUGE OPTIONS: 22 **
** TESTED IN ACCORDANCE WITH DADE COUNTY PROTOCOLS TAS 201−94, TAS 202−94, AND TAS 203−94

SERIES 630/631/634 ARE EQUIVALENT CONSTRUCTION

8/25/10

OVERHEAD DOOR CORPORATION
2501 SOUTH STATE HWY 121 BUSINESS
LEWISVILLE, TX 75067
LeROY G. KRUPKE, P.E. #36580

UNLESS OTHERWISE SPECIFIED
DIMENSIONS ARE IN INCHES/TOLERANCES ON
DECIMAL DIMENSIONS .XX= ± .03 .XXX= ± .005
HOLE DIAMETERS UNDER .251=+.004−.003 .251 TO .500=+.006−.003 OVER .500=+.008−.003
ANGLES ± 0° 30'
FRACTIONS ± 1/16"

OVERHEAD DOOR the original since 1921 DALLAS, TEXAS

MATERIAL: 4
APPLIED FINISH: 5
UNIT OF MEASURE: N/A

	NAME	DATE
DRAWN BY:	D WARNER	2/26/09
CHECKED BY:	M SAWICKI	8/24/09
APPROVED BY:	S FOENG	9/23/09

DRAWING TITLE: SERIES 630/631/634, ROLLING FIRE DOOR 14' MIAMI−DADE COUNTY
DRAWING NUMBER D−308231
SCALE: NONE
SHEET 1 OF 2

NOTES

1. MATERIAL: ALUMINUM 3003 H14 (0.03 THICK) WITH TRANSPARENT KELSTRIP COVERING.
2. COLOR: HANSCHY RED CS 2311.
3. STAMP FACTORY ORDER NUMBER HERE.
4. A LETTER MUST BE STAMPED ON ROLLING FIRE DOORS TO IDENTIFY MANUFACTURING PLANT (I.E., USE "P" FOR PENNSYLVANIA).
5. FASTENER FOR TAG IS P/N 080276-1004(STEEL DRIVE SCREW). TAG WILL BE MOUNTED IN THE MIDDLE OF THE BOTTOM BAR.
6. STAMP SLAT TYPE HERE.
7. STAMP ACCEPTANCE NUMBER HERE.

REVISIONS

LETTER	DESCRIPTION	DATE	APPROVAL
–	RFP PER ER 500195	9/23/09	SFT
A	REV PER ER 500300	2/2/2010	SFT
B	REV PER ER 500692	8/25/10	SFT

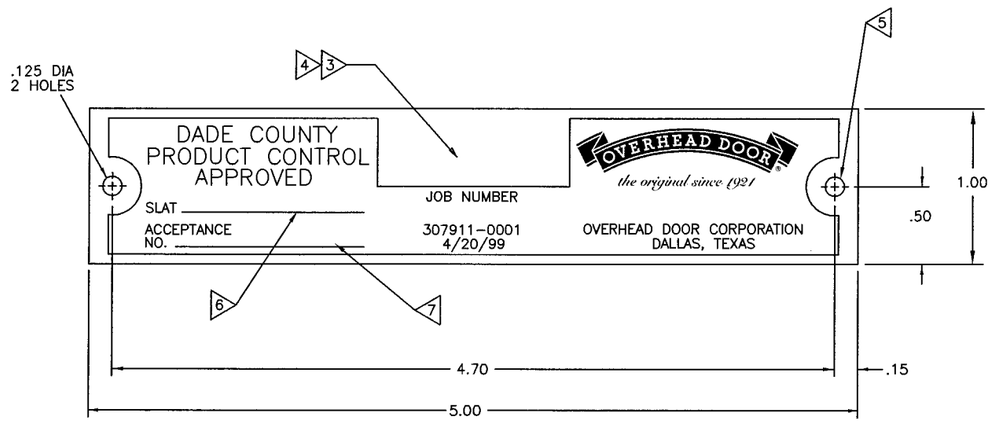

P/N 307911-0001 – DADE CO. APPROVAL TAG, ROLLING DOORS & GRILLES

SCALE: 2/1

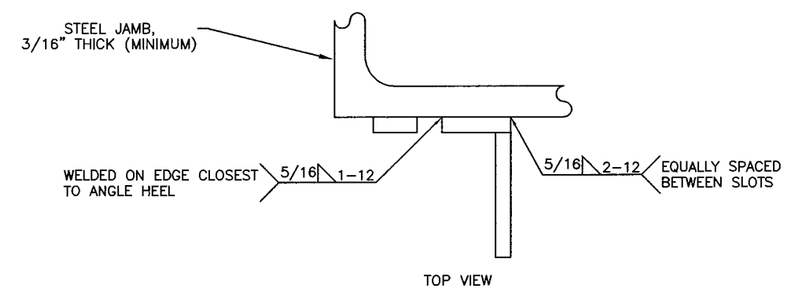

TOP VIEW

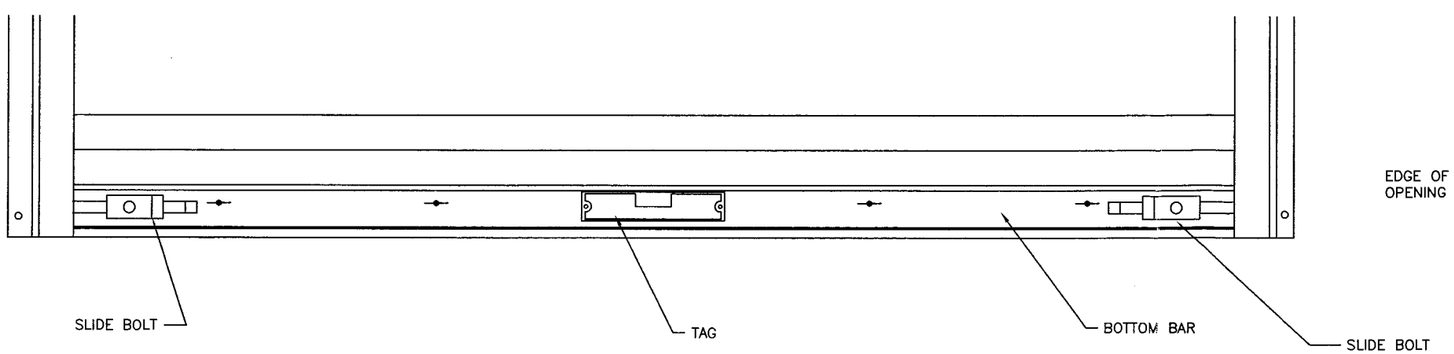

DETAIL "E" 5

SCALE: 4/1

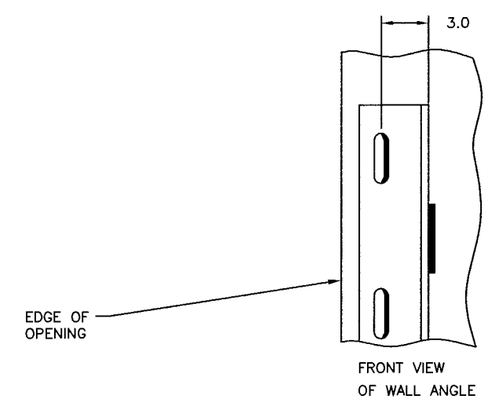

DETAILS FOR WELDING "E" GUIDES TO STEEL JAMBS

PRODUCT REVISED
as complying with the Florida Building Code
Acceptance No 10-0831.15
Expiration Date 12/02/2014
By
Miami Dade Product Control Division

8/25/10

OVERHEAD DOOR CORPORATION
2501 SOUTH STATE HWY 121 BUSINESS
LEWISVILLE, TX 75067
LeROY G. KRUPKE, P.E. #36580

UNLESS OTHERWISE SPECIFIED			OVERHEAD DOOR the original since 1921 DALLAS, TEXAS		NAME	DATE	DRAWING TITLE: SERIES 630/631/634, ROLLING FIRE DOOR 14' MIAMI-DADE COUNTY
DIMENSIONS ARE IN INCHES; TOLERANCES ON DECIMAL DIMENSIONS .XX= ± .03 .XXX= ± .005	HOLE DIAMETERS UNDER .251+.004-.003 .251 TO .500+.006-.003 OVER .500+.006-.003	ANGLES ± 0° 30' FRACTIONS ± 1/16"	MATERIAL: 4		DRAWN BY: D WARNER	2/26/09	
			APPLIED FINISH: 5	UNIT OF MEASURE: N/A	CHECKED BY: M SAWICKI	8/24/09	DRAWING NUMBER D-308231
					APPROVED BY: S FOENG	9/23/09	SCALE: NONE SHEET 2 OF 2