MIAMI-DADE COUNTY
BUILDING AND NEIGHBORHOOD COMPLIANCE DEPARTMENT (BNC)
BOARD AND CODE ADMINISTRATION DIVISION

MIAMI-DADE COUNTY
PRODUCT CONTROL SECTION
11805 SW 26 Street, Room 208
Miami, Florida 33175-2474
T (786) 315-2590 F (786) 315-2599
www.miamidade.gov/building

NOTICE OF ACCEPTANCE (NOA)

Florida Storm Protection, Inc.
16687 SW 117th Avenue
Miami, Florida 33177

SCOPE:
This NOA is being issued under the applicable rules and regulations governing the use of construction materials. The documentation submitted has been reviewed by Miami-Dade County Product Control Section and accepted by the Board of Rules and Appeals (BORA) to be used in Miami Dade County and other areas where allowed by the Authority Having Jurisdiction (AHJ).

This NOA shall not be valid after the expiration date stated below. The Miami-Dade County Product Control Section (In Miami Dade County) and/or the AHJ (in areas other than Miami Dade County) reserve the right to have this product or material tested for quality assurance purposes. If this product or material fails to perform in the accepted manner, the manufacturer will incur the expense of such testing and the AHJ may immediately revoke, modify, or suspend the use of such product or material within their jurisdiction. BORA reserves the right to revoke this acceptance, if it is determined by Miami-Dade County Product Control Section that this product or material fails to meet the requirements of the applicable building code.

This product is approved as described herein, and has been designed to comply with the High Velocity Hurricane Zone of the Florida Building Code.

DESCRIPTION: Accordion Shutter with Aluminum or Polycarbonate Blades

APPROVAL DOCUMENT: Drawing No.10-FSI-0001, titled "Accordion Shutter with Aluminum or Polycarbonate Blades", sheets 1 through 10 of 10, prepared by Engineering Express, dated August 30, 2010, signed and sealed by Frank L. Bennardo, P.E., on August 30, 2010 bearing the Miami-Dade County Product Control Approval stamp with the Notice of Acceptance number and the approval date by the Miami-Dade County Product Control Section.

MISSILE IMPACT RATING: Large and Small Missile Impact Resistant

LABELING: Each unit shall bear a permanent label with the manufacturer's name or logo, city, state and the following statement: "Miami-Dade County Product Control Approved per TAS-201, TAS-202, and TAS-203", and NOA number, unless otherwise noted herein.

RENEWAL of this NOA shall be considered after a renewal application has been filed and there has been no change in the applicable building code negatively affecting the performance of this product.

TERMINATION of this NOA will occur after the expiration date or if there has been a revision or change in the materials, use, and/or manufacture of the product or process. Misuse of this NOA as an endorsement of any product, for sales, advertising or any other purposes shall automatically terminate this NOA. Failure to comply with any section of this NOA shall be cause for termination and removal of NOA.

ADVERTISEMENT: The NOA number preceded by the words Miami-Dade County, Florida, and followed by the expiration date may be displayed in advertising literature. If any portion of the NOA is displayed, then it shall be done in its entirety.

INSPECTION: A copy of this entire NOA shall be provided to the user by the manufacturer or its distributors and shall be available for inspection at the job site at the request of the Building Official.

This NOA and consists of this page 1, evidence submitted page E-1 as well as approval document mentioned above. The submitted documentation was reviewed by **Helmy A. Makar, P.E., M.S.**

MIAMI-DADE COUNTY APPROVED

Helmy A. Makar
03/31/2011

NOA No. 10-0902.07
Expiration Date: 03/31/2016
Approval Date: 03/31/2011

Florida Storm Protection, Inc.

NOTICE OF ACCEPTANCE: EVIDENCE SUBMITTED

A. DRAWINGS

1. *Drawing No. 10-FSI-0001, titled "Accordion Shutter with Aluminum or Polycarbonate Blades", sheets 1 through 10 of 10, prepared by Engineering Express, dated August 30, 2010, signed and sealed by Frank L. Bennardo, P.E., on August 30, 2010.*

B. TESTS

1. *See Association's generic approval under 09-1337.*

C. CALCULATIONS

1. *See Association's generic approval under 09-1337.*

D. MATERIAL CERTIFICATIONS

1. *See Association's generic approval under 09-1337.*

E. STATEMENTS

1. *Release letter issued by Impact Technology Association, Inc., dated August 23, 2010, certifying this product to meet the criteria of product tested and approved, and allowing Florida Storm Protection, Inc. to use the test results approved under Miami-Dade County Approval No. 09-1337, signed by Tanya Tarantino.*
2. *Acknowledgment letter by Florida Storm Protection, Inc., dated March 24, 2011, signed by Juan Arias.*
3. *Letter by Engineering Express, dated August 30, 2010, certifying that the drawing (No. 10-FSI-0001) prepared for Florida Storm Protection, Inc., signed and sealed by Frank L. Bennardo, P.E., is engineering wise identical to Impact Technology Association, Inc. Association generic drawing (No. 08-ITI-0001).*

Helmy A. Makar, P.E., M.S.
BNC, Product Control Unit Supervisor
NOA No. 10-0902.07
Expiration Date: 03/31/2016
Approval Date: 03/31/2011

ACCORDION SHUTTER
WITH ALUMINUM OR POLYCARBONATE BLADES

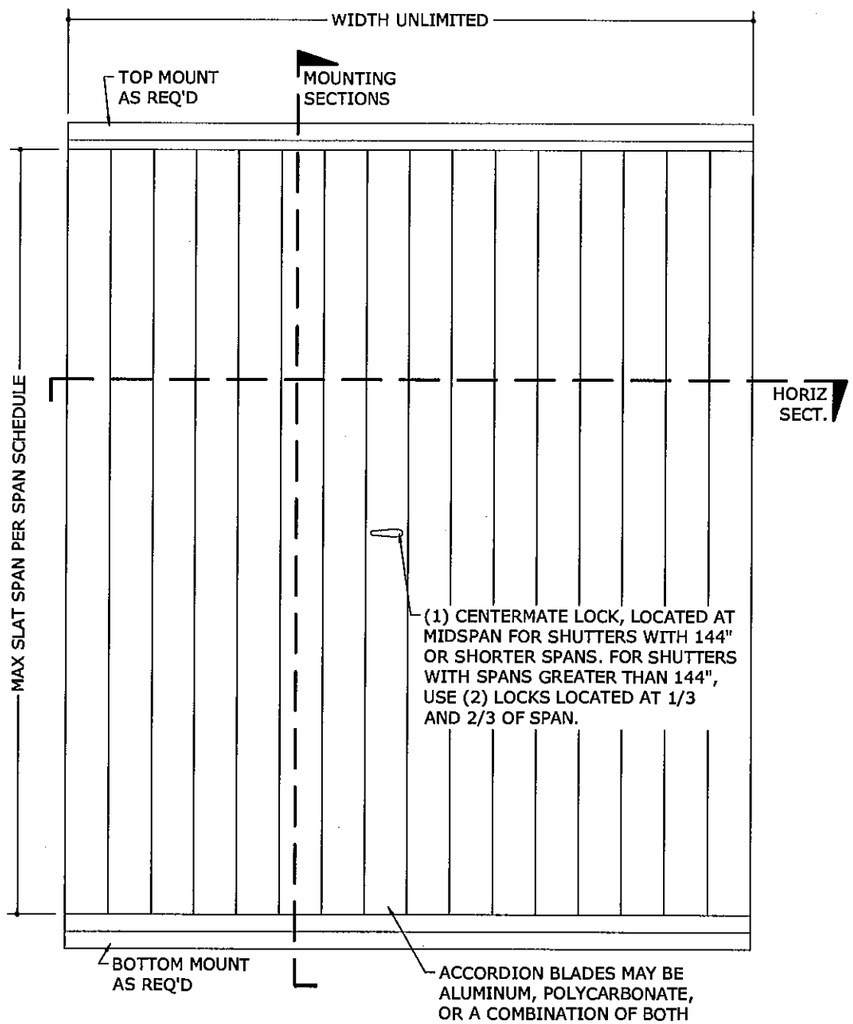

1/1 TYPICAL ELEVATION
N.T.S. EXTERIOR ELEV

ALLOWABLE SPAN SCHEDULE

SLAT SPAN	MAXIMUM ALLOWABLE DESIGN PRESSURES					
	ALUMINUM BLADES ONLY		WINDOW BLADES OR ALUMINUM/ WINDOW BLADE COMBINATION*		SHUTTER WITH ALUMINUM BLADES AND ONE SINGLE WINDOW BLADE**	
72"	+ 152.5 PSF	- 152.5 PSF				
90"	+ 117.8 PSF	- 117.8 PSF				
108"	+ 100.5 PSF	- 100.5 PSF	+ 93.6 PSF	- 93.6 PSF		
126"	+ 61.2 PSF	- 76.2 PSF				
144"	+ 42.4 PSF	- 62.4 PSF			+ 42.4 PSF	- 62.4 PSF
162"	+ 25.5 PSF	- 41.6 PSF			+ 25.5 PSF	- 41.6 PSF

SPAN SCHEDULE NOTES:

1. PRESSURES SHOWN IN "ALLOWABLE SPAN SCHEDULE" ARE MAXIMUM ALLOWABLE DESIGN PRESSURES AT EACH RESPECTIVE SHUTTER SPAN.
2. * APPLICABLE FOR INSTALLATIONS UTILIZING ONE OR MORE WINDOW BLADES.
3. ** ONLY APPLICABLE FOR INSTALLATIONS WITH ONE SINGLE WINDOW BLADE SLAT, AND THE REMAINDER OF BLADES ALUMINUM.

Approved as complying with the Florida Building Code
Date 03/31/2011
NOA# 10-0902.07
Miami Dade Product Control
By [signature]

MINIMUM GLASS SEPARATION

SPAN LESS THAN:	ALUMINUM BLADES ONLY		WINDOW BLADES OR ALUMINUM/ WINDOW BLADE COMBINATION*		SHUTTER WITH ALUMINUM BLADES AND ONE SINGLE WINDOW BLADE**	
	INSTALLATIONS 30' ABOVE GRADE OR LESS	INSTALLATIONS MORE THAN 30' ABOVE GRADE	INSTALLATIONS 30' ABOVE GRADE OR LESS	INSTALLATIONS MORE THAN 30' ABOVE GRADE	INSTALLATIONS 30' ABOVE GRADE OR LESS	INSTALLATIONS MORE THAN 30' ABOVE GRADE
72"	1.88"	1.88"				
90"	2.13"	2.13"				
108"	2.88"	2.78"	2.63"	2.63"		
126"	3.63"	3.00"				
144"	4.50"	3.00"			4.50"	3.00"
162"	4.50"	3.00"			4.50"	3.00"

GLASS SEPARATION SCHEDULE NOTES:

1. * APPLICABLE FOR INSTALLATIONS UTILIZING ONE OR MORE WINDOW BLADES.
2. ** ONLY APPLICABLE FOR INSTALLATIONS WITH ONE SINGLE WINDOW BLADE SLAT, AND THE REMAINDER OF BLADES ALUMINUM.

GENERAL NOTES

1. THE SYSTEM DESCRIBED HEREIN HAS BEEN DESIGNED AND TESTED IN ACCORDANCE WITH THE 2007 EDITION OF THE FLORIDA BUILDING CODE, FOR USE WITHIN AND OUTSIDE THE HIGH VELOCITY HURRICANE ZONE, PER TAS 201 / 202 / 203.
2. NO 33-1/3% INCREASE IN ALLOWABLE STRESS HAS BEEN USED IN THE DESIGN OF THIS SYSTEM. WIND LOAD DURATION FACTOR Cd=1.6 HAS BEEN USED FOR WOOD ANCHOR DESIGN.
3. POSITIVE AND NEGATIVE DESIGN PRESSURES CALCULATED FOR USE WITH THIS SYSTEM SHALL BE DETERMINED BY OTHERS ON A JOB-SPECIFIC BASIS IN ACCORDANCE WITH THE GOVERNING CODE.
4. ALL POLYCARBONATE PANELS SHALL BE EXTRUDED WITH THICKNESS t=0.090" AND SHALL BE FABRICATED FROM 100% SABIC INNOVATIVE PLASTICS THERMOPLASTIC POLYMER LEXAN SHEET #XL10 2UV (UV STABILIZED), AS APPROVED UNDER MIAMI-DADE COUNTY NOTICE OF ACCEPTANCE #08-0305.02..
5. THE SYSTEM DETAILED HEREIN IS GENERIC AND DOES NOT PROVIDE INFORMATION FOR A SPECIFIC SITE. FOR SITE CONDITIONS DIFFERENT FROM THE CONDITIONS DETAILED HEREIN, A LICENSED ENGINEER OR REGISTERED ARCHITECT SHALL PREPARE SITE SPECIFIC DOCUMENTS FOR USE IN CONJUNCTION WITH THIS DOCUMENT.
6. PERMIT HOLDER SHALL VERIFY THE ADEQUACY OF THE EXISTING STRUCTURE TO WITHSTAND SUPERIMPOSED LOADS. WOOD BUCKS (BY OTHERS) SHALL BE ANCHORED PROPERLY TO TRANSFER LOADS TO THE EXISTING STRUCTURE.
7. ALL EXTRUSIONS SHALL BE 6063-T6 ALUMINUM ALLOY, UNLESS NOTED OTHERWISE.
8. EACH SHUTTER ASSEMBLY SHALL BE PERMANENTLY LABELED AS FOLLOWS:
   FLORIDA STORM PROTECTION, INC.
   MIAMI-DADE PRODUCT CONTROL APPROVED
9. TOP & BOTTOM DETAILS SHOWN MAY BE INTERCHANGED AS FIELD CONDITIONS DICTATE.
10. ALL BOLTS & WASHERS SHALL BE ZINC COATED STEEL, GALVANIZED STEEL, OR STAINLESS STEEL WITH A MINIMUM TENSILE YIELD STRENGTH OF 60 KSI. ALL 3/16"Ø OR 1/4"Ø POP RIVETS SHALL BE 5056-H32 ALUMINUM ALLOY OR STRONGER.
11. ALL STEEL IN CONTACT WITH ALUMINUM SHALL BE PAINTED OR PLATED.

ENGINEERING EXPRESS®
160 SW 12th AVENUE, #106
DEERFIELD BEACH, FL 33442
Ph: (954) 354-0660 Fax: (954) 354-0443
WWW.ENGEXP.COM
CERT OF AUTH #9885
A. FRANK L. BENNARDO, P.E., INC. INNOVATION

FLORIDA STORM PROTECTION INC.
16687 SW 117 AVENUE
MIAMI, FL 33177
PHONE: (305) 971 - 9383

ACCORDION SHUTTER
WITH ALUMINUM OR POLYCARBONATE BLADES
MIAMI-DADE NOTICE OF ACCEPTANCE

REMARKS	DRWN	CHKD	DATE
INIT ISSUE	KL	FLB	08/30/10

10-FSI-0001
SCALE: - 01
PAGE DESCRIPTION:
-
-

10

1

PE0046549
08/30/2010

F:\01 Project Files\Florida Storm Inc (FSI)\2010\10-FSI-0001 Impact Tech Assn Member - Accordion Shutter NOA\10-FSI-0001_01a Alum, Polycarb Accordion Shutter.dwg
08/30/2010 - 3:12pm keith!

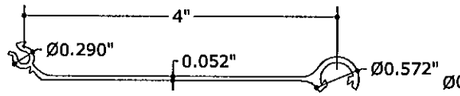

1 ALUMINUM BLADE
N.T.S. 6063-T6

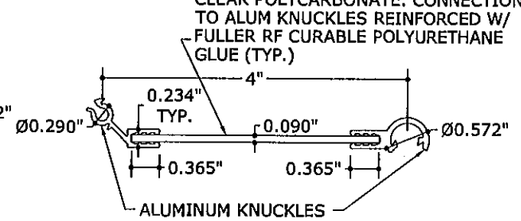

2 WINDOW BLADE
N.T.S. 6063-T6/POLYCARBONATE

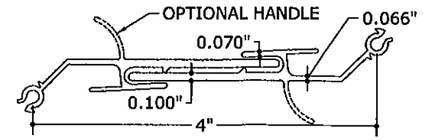

3 HERMAPHRODITIC CENTERMATE
N.T.S. 6063-T6

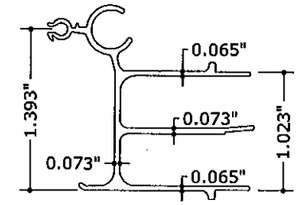

4 MALE CENTERMATE
N.T.S. 6063-T6

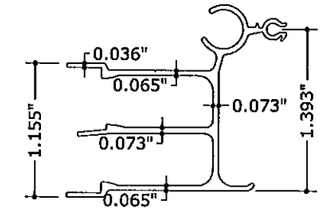

5 FEMALE CENTERMATE
N.T.S. 6063-T6

6 BLADE ADAPTER
N.T.S. 6063-T6

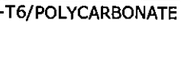

8 FLAT STARTER BLADE
N.T.S. 6063-T6

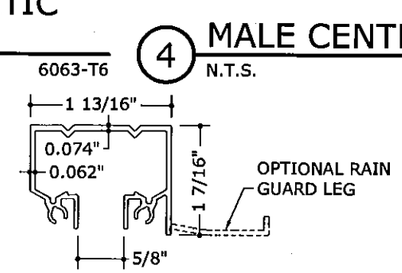

9 CEILING HEADER
N.T.S. 6063-T6

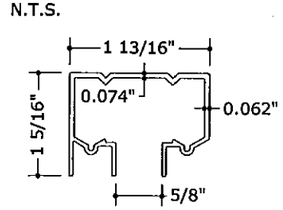

37 ALT. CEILING HEADER
N.T.S. 6063-T6

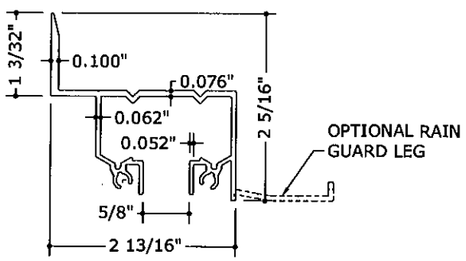

10 WALL HEADER
N.T.S. 6063-T6

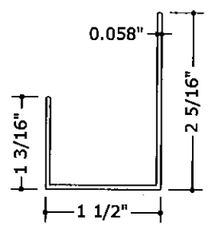

11 ADJUSTABLE SILL TRACK BOTTOM
N.T.S. 6063-T6

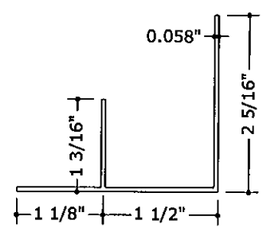

12 ALT. ADJUSTABLE SILL TRACK BOTTOM
N.T.S. 6063-T6

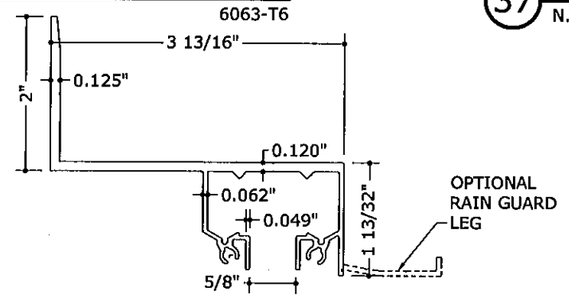

13 BUILD-OUT WALL HEADER
N.T.S. 6063-T6

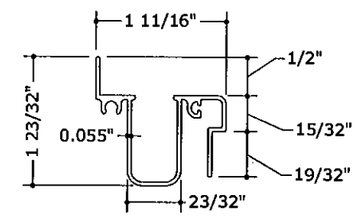

14 ADJUSTABLE SILL TRACK TOP
N.T.S. 6063-T6

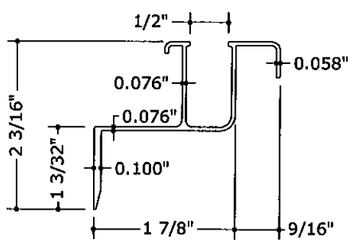

15 WALL SILL TRACK
N.T.S. 6063-T6

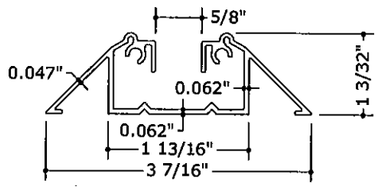

16 WALKOVER TRACK
N.T.S. 6063-T6

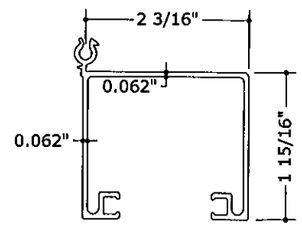

29 HIGH IMPACT CENTERMATE
N.T.S. 6063-T6

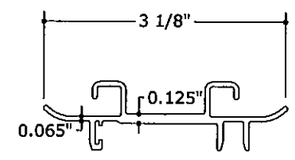

30 HIGH IMPACT CENTERMATE INSERT
N.T.S. 6063-T6

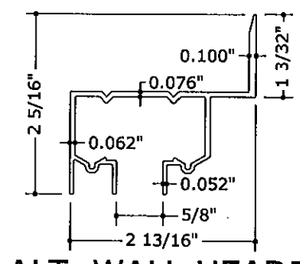

38 ALT. WALL HEADER
N.T.S. 6063-T6

Approved as complying with the Florida Building Code
Date 03/31/2011
NOA# 10-0902.07
Miami Dade Product Control
By

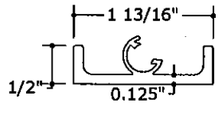

31 CEILING SIDE MOUNT
N.T.S. 6063-T6

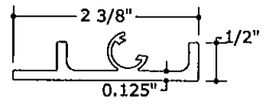

32 HEADER SIDE MOUNT
N.T.S. 6063-T6

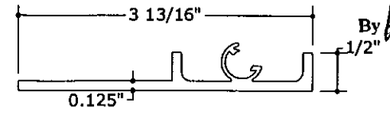

33 BUILD-OUT HEADER SIDE MOUNT
N.T.S. 6063-T6

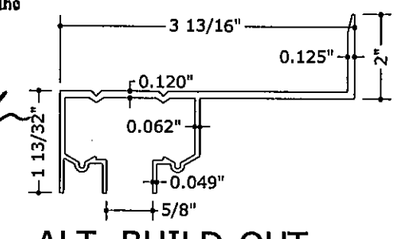

39 ALT. BUILD-OUT WALL HEADER
N.T.S. 6063-T6

ENGINEERING EXPRESS®
160 SW 12th AVENUE, #106
DEERFIELD BEACH, FL 33442
Ph: (954) 354-0660 Fax: (954) 354-0443
WWW.ENGEXP.COM
CERT OF AUTH #9985
A. FRANK L. BENNARDO, P.E., INC. INNOVATION

08/30/2010

FLORIDA STORM PROTECTION INC.
16687 SW 117 AVENUE
MIAMI, FL 33177
PHONE: (305) 971 - 9383

ACCORDION SHUTTER
WITH ALUMINUM OR POLYCARBONATE BLADES
MIAMI-DADE NOTICE OF ACCEPTANCE

REMARKS	DRWN	CHKD	DATE
INIT ISSUE	KL	FLB	08/30/10

10-FSI-0001
SCALE: - 01
PAGE DESCRIPTION:

10

2

F:\01 Project Files\Florida Storm Inc (FSI)\2010\10-FSI-0001_01a Alum. Polycarb Accordion Shutter.dwg
08/30/2010 - 3:12pm keith
Member - Accordion Shutter NOA\10-FSI-0001 Impact Tech Assn

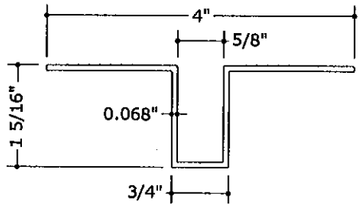

17 RECESSED TRACK
N.T.S. 6063-T5

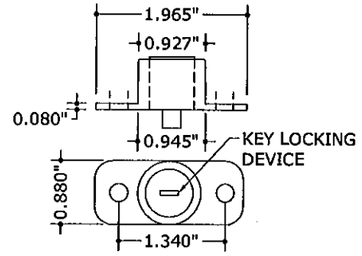

18 PUSH-BUTTON LOCK
N.T.S. 6063-T5

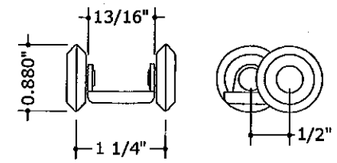

19 WHEEL CARRIAGE
N.T.S. NYLON/STAINLESS STEEL

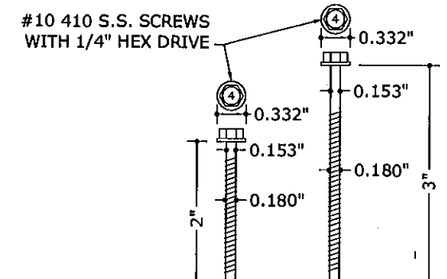

20 KNUCKLE SCREWS
N.T.S. STAINLESS STEEL

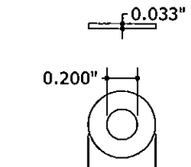

21 WASHER
N.T.S. STAINLESS STEEL

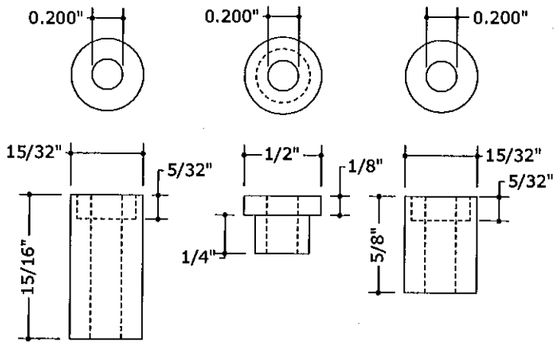

22 NYLON BUSHINGS
N.T.S. NYLON

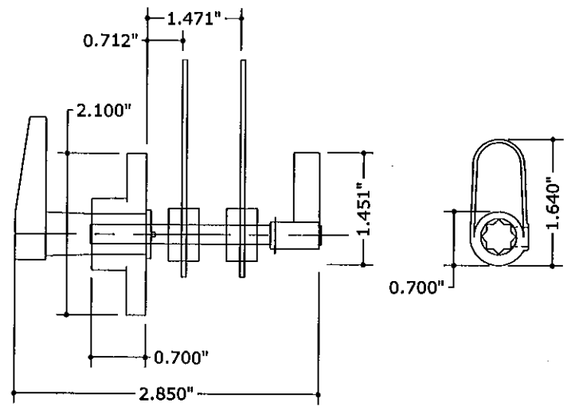

23 LOCK ASSEMBLY
N.T.S. ZINC ALLOY/STAINLESS STEEL

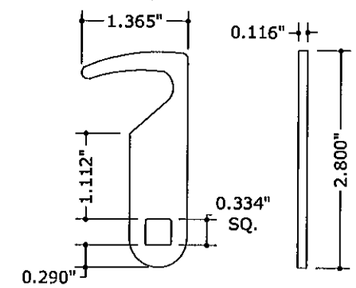

24 LOCKING ARM
N.T.S. 410 STAINLESS STEEL

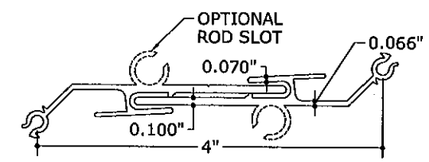

40 ALT. HERMAPHRODITIC CENTERMATE
N.T.S. 6063-T6

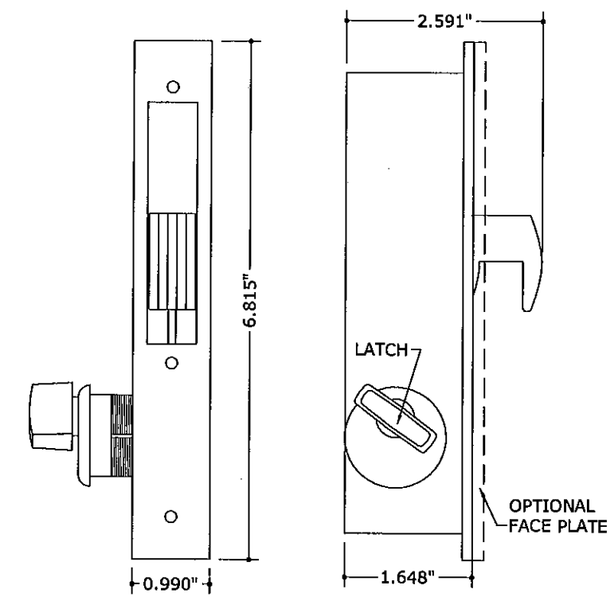

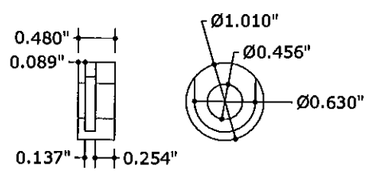

25 LEFT LOCKING ARM BUSHING
N.T.S. NYLON

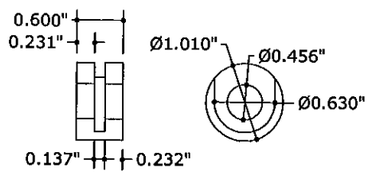

26 RIGHT LOCKING ARM BUSHING
N.T.S. NYLON

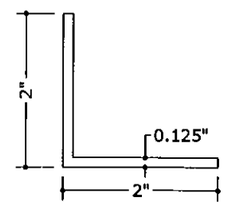

35 2"x2"x0.125" ANGLE
N.T.S. 6063-T6

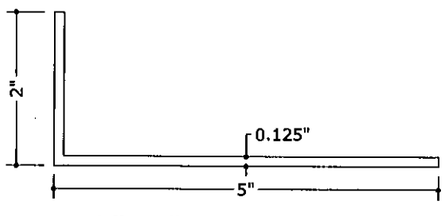

27 2"x5"x0.125" ANGLE
N.T.S. 6063-T6

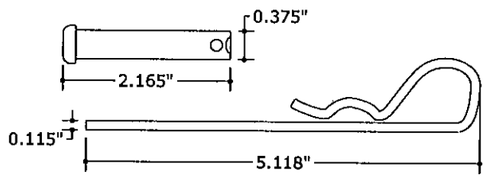

28 CLEVIS AND PIN
N.T.S. CADMIUM PLATED STEEL

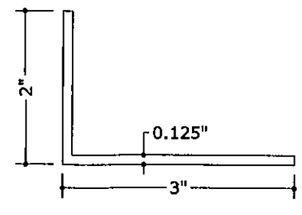

36 2"x3"x0.125" ANGLE
N.T.S. 6063-T6

Approved as complying with the Florida Building Code
Date 03/31/2011
NOA# 10-0902.07
Miami Dade Product Control
By

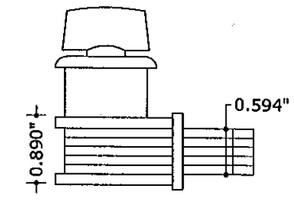

34 HOOK BOLT DEAD LOCK
N.T.S. ALUMINUM

FRANK L. BENNARDO, P.E.
PE0046549
08/30/2010
ENGINEERING EXPRESS®
160 SW 12th AVENUE, #106
DEERFIELD BEACH, FL 33442
Ph: (954) 354-0660 Fax: (954) 354-0443
WWW.ENGEXP.COM
CERT OF AUTH #8985
A. FRANK L. BENNARDO, P.E., INC. INNOVATION

FLORIDA STORM PROTECTION INC.
16687 SW 117 AVENUE
MIAMI, FL 33177
PHONE: (305) 971 - 9383

ACCORDION SHUTTER
WITH ALUMINUM OR POLYCARBONATE BLADES
MIAMI-DADE NOTICE OF ACCEPTANCE

REMARKS	DRWN	CHKD	DATE
INIT ISSUE	KL	FLB	08/30/10

10-FSI-0001
SCALE: - 01
PAGE DESCRIPTION:
-
-

10

3

08/30/2010 - 3:12pm keithl F:\01 Project Files\Florida Storm Inc (FSI)\2010\10-FSI-0001 Impact Tech Assn Member - Accordion Shutter NOA\10-FSI-0001_01a Alum, Polycarb Accordion Shutter.dwg

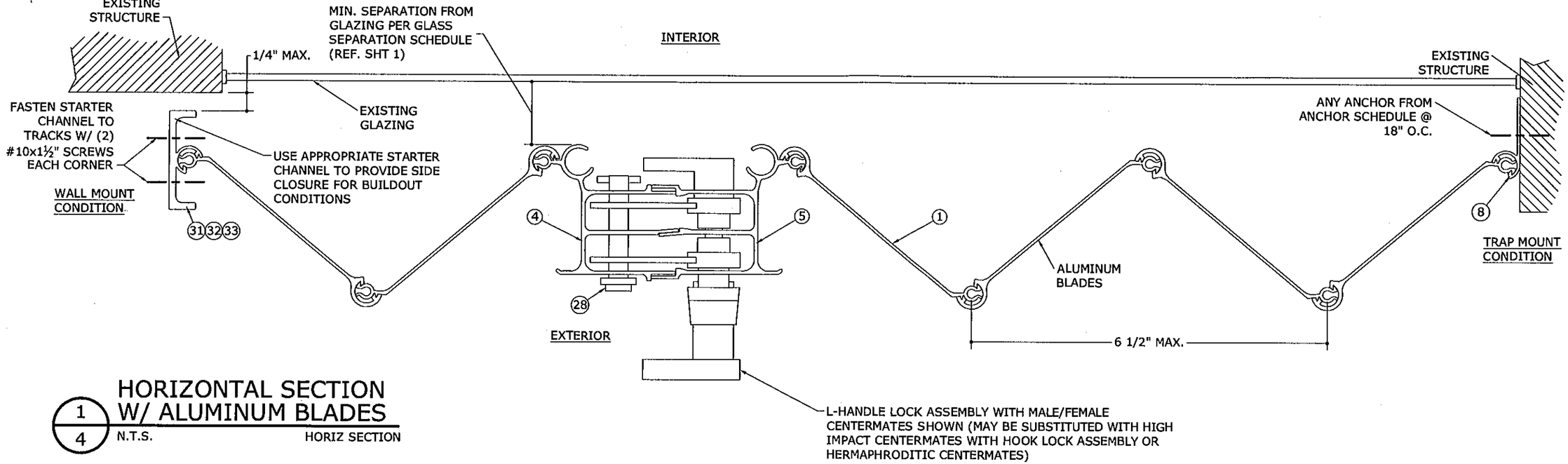

1/4 HORIZONTAL SECTION W/ ALUMINUM BLADES

N.T.S. HORIZ SECTION

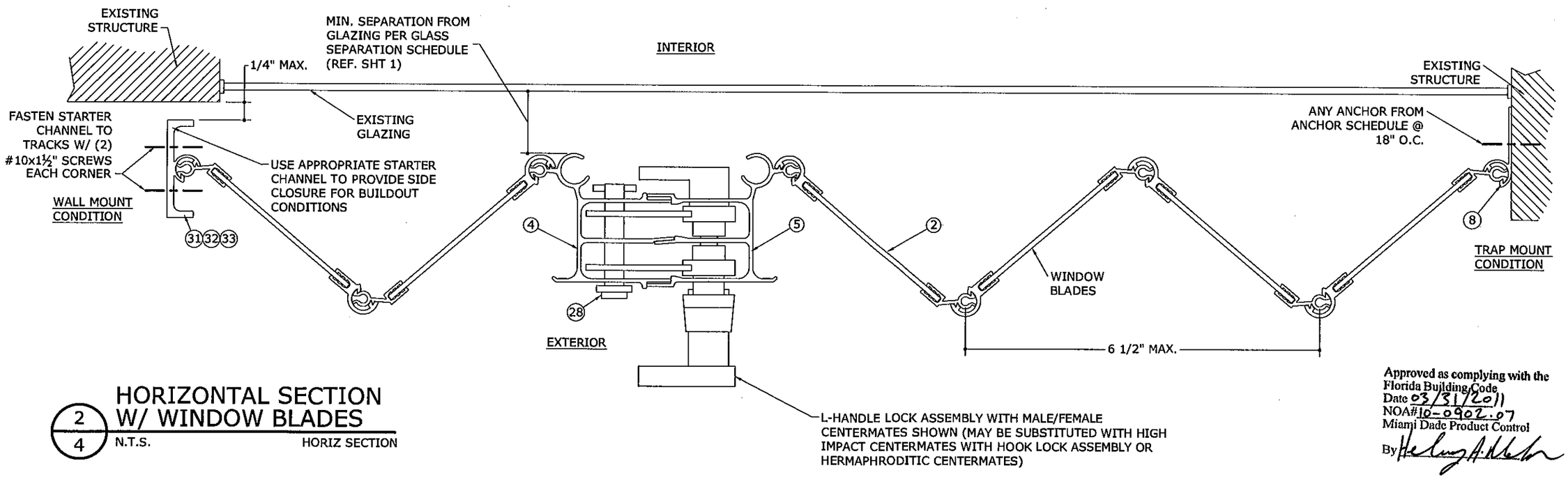

2/4 HORIZONTAL SECTION W/ WINDOW BLADES

N.T.S. HORIZ SECTION

Approved as complying with the Florida Building Code
Date 03/31/2011
NOA#10-0902.07
Miami Dade Product Control
By

PE0046549
08/30/2010

ENGINEERING EXPRESS®
160 SW 12th AVENUE, #106
DEERFIELD BEACH, FL 33442
PH: (954) 354-0660 FAX: (954) 354-0443
WWW.ENGEXP.COM
CERT OF AUTH #6885
A. FRANK L. BENNARDO, P.E., INC. INNOVATION

FLORIDA STORM PROTECTION INC.
16687 SW 117 AVENUE
MIAMI, FL 33177
PHONE: (305) 971 - 9383

ACCORDION SHUTTER
WITH ALUMINUM OR POLYCARBONATE BLADES
MIAMI-DADE NOTICE OF ACCEPTANCE

REMARKS	DRWN	CHKD	DATE
INIT ISSUE	KL	FLB	08/30/10

10-FSI-0001
SCALE: - 01
PAGE DESCRIPTION:

10

4

08/30/2010 - 3:13pm keithl F:\01 Project Files\Florida Storm Inc (FSI)\2010\10-FSI-0001 Impact Tech Assn Member - Accordion Shutter NOA\10-FSI-0001_01a Alum, Polycarb Accordion Shutter.dwg

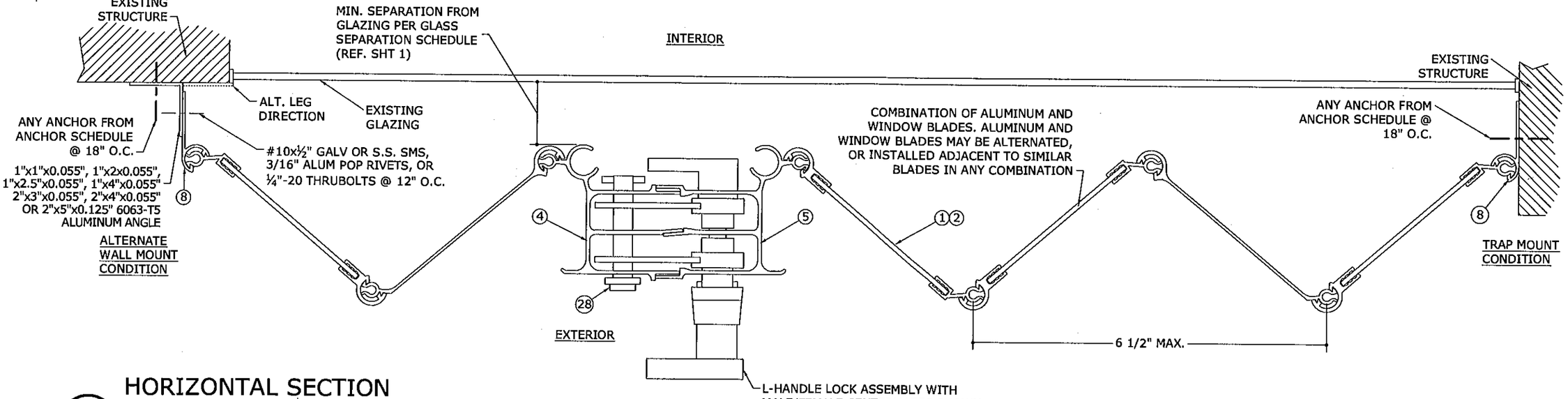

1/5 HORIZONTAL SECTION W/ COMBINATION BLADES

N.T.S. HORIZ SECTION

NOTE: LOCKS MAY BE MOUNTED ON INTERIOR OR EXTERIOR SIDE OF SHUTTER.

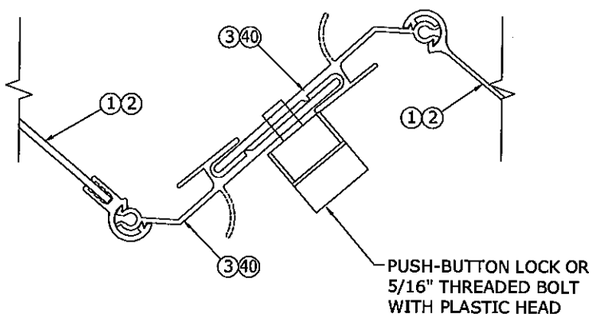

2/5 ALT. HERMAPHRODITIC CENTERMATE

N.T.S. HORIZ SECTION

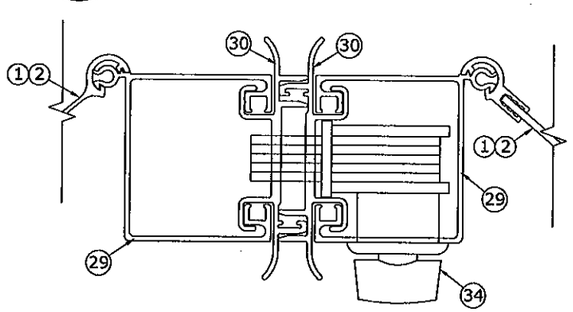

3/5 ALT. HIGH IMPACT CENTERMATE

N.T.S. HORIZ SECTION

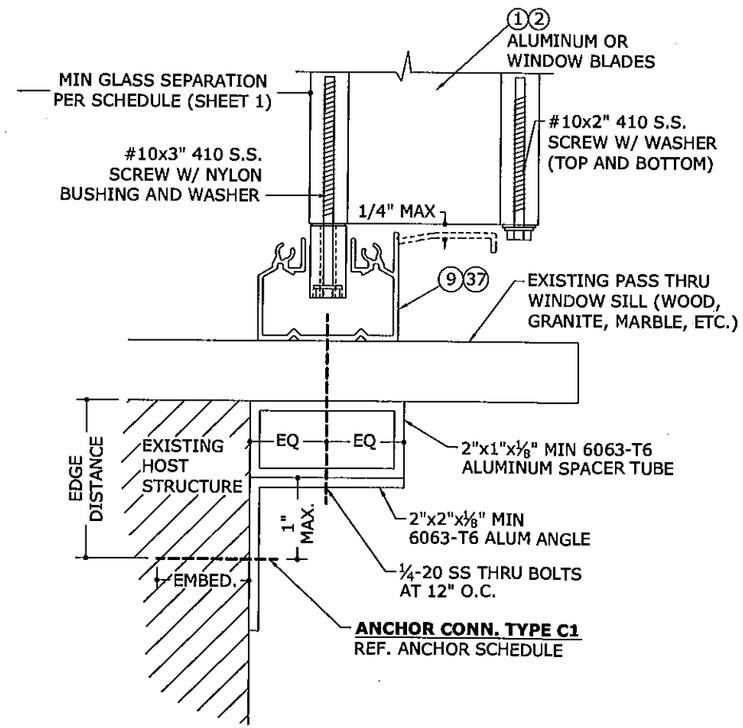

4/5 PASS THRU WINDOW DETAIL

N.T.S. VERT SECTION

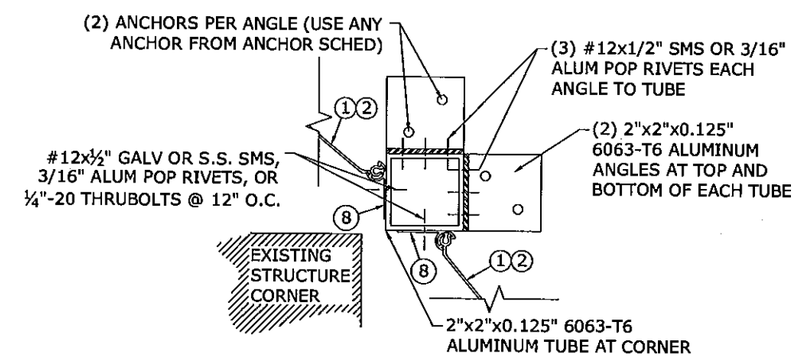

5/5 STANDARD CORNER CLOSURE

N.T.S. HORIZ SECTION

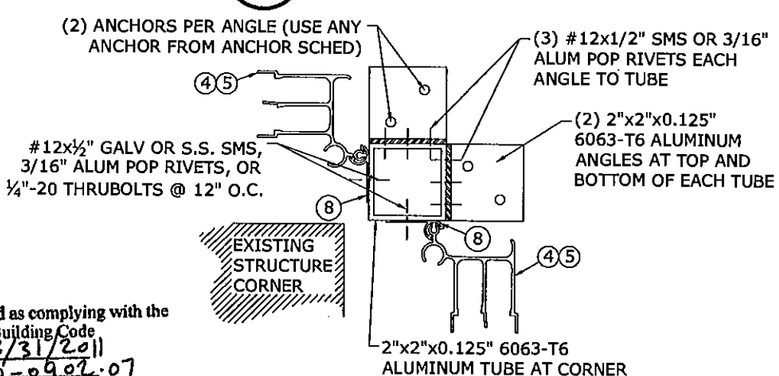

6/5 ALTERNATE CORNER CLOSURE

N.T.S. HORIZ SECTION

Approved as complying with the Florida Building Code
Date 03/31/2011
NOA# 10-0902.07
Miami Dade Product Control
By

FRANK L. BENNARDO, P.E.
PE0046549
08/30/2010
ENGINEERING EXPRESS®
160 SW 12th AVENUE, #106
DEERFIELD BEACH, FL 33442
Ph: (954) 354-0660 Fax: (954) 354-0443
WWW.ENGEXP.COM
CERT OF AUTH #9985
A. FRANK L. BENNARDO, P.E., INC. INNOVATION

FLORIDA STORM PROTECTION INC.
16687 SW 117 AVENUE
MIAMI, FL 33177
PHONE: (305) 971 - 9383

ACCORDION SHUTTER WITH ALUMINUM OR POLYCARBONATE BLADES
MIAMI-DADE NOTICE OF ACCEPTANCE

REMARKS	DRWN	CHKD	DATE
INIT ISSUE	KL	FLB	08/30/10

10-FSI-0001

SCALE: - 01

PAGE DESCRIPTION:

10

5

08/30/2010 - 3:13pm keithl F:\01 Project Files\Florida Storm Inc.(FSI)\2010\10-FSI-0001 Impact Tech Assn Member - Accordion Shutter NOA\10-FSI-0001_01a Alum, Polycarb Accordion Shutter.dwg

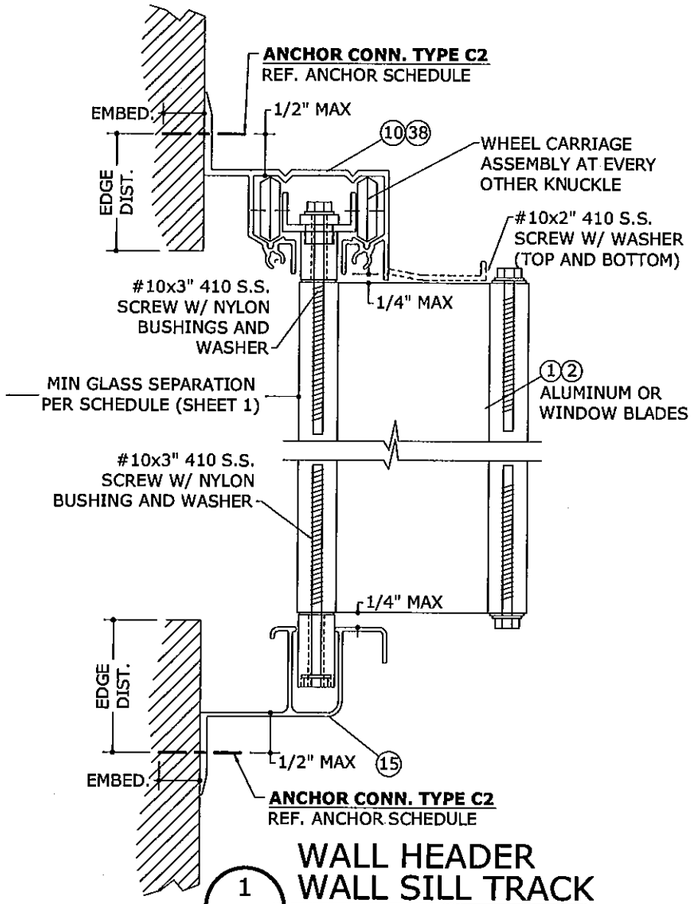

1/6 WALL HEADER WALL SILL TRACK

N.T.S. VERT SECTION

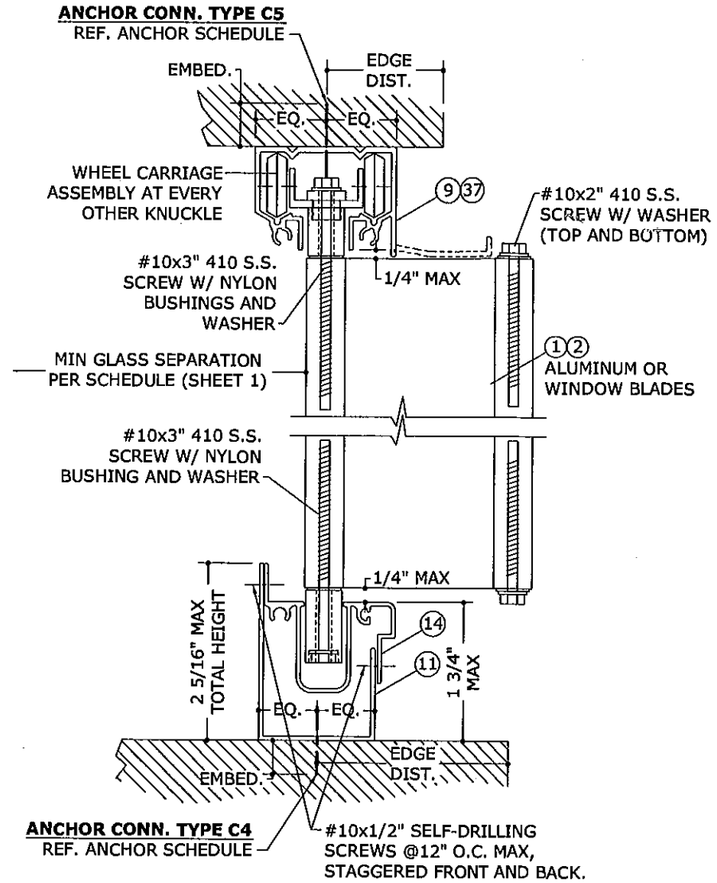

2/6 CEILING HEADER ADJUSTABLE SILL TRACK

N.T.S. VERT SECTION

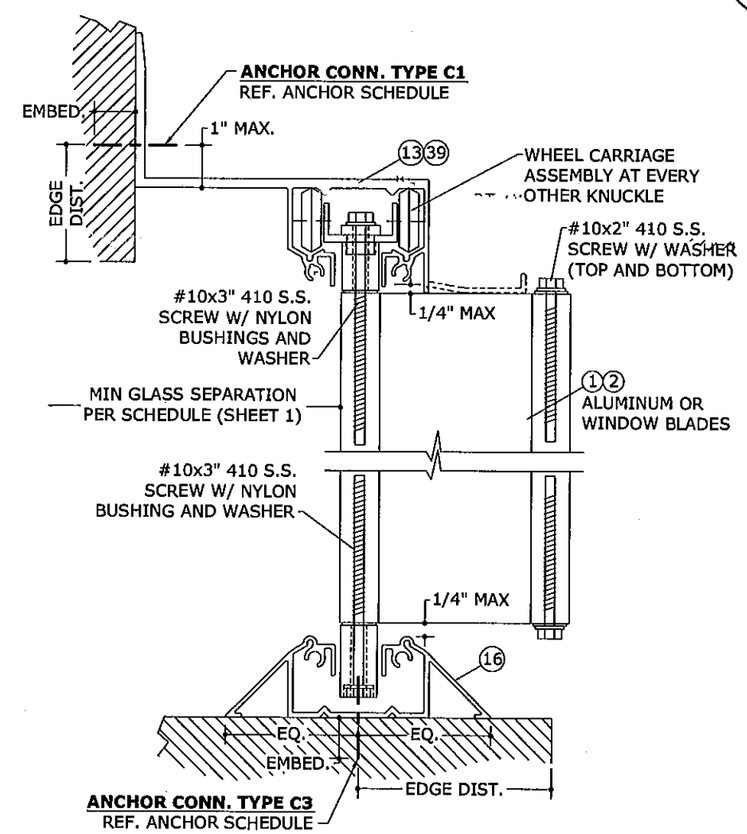

3/6 B.O. WALL HEADER WALKOVER TRACK

N.T.S. VERT SECTION

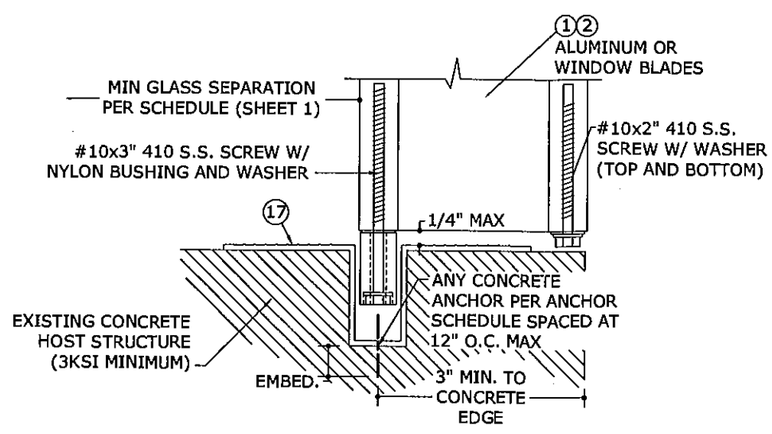

4/6 RECESSED FLOOR TRACK

N.T.S. VERT SECTION

Approved as complying with the Florida Building Code
Date 03/31/2011
NOA# 10-0902.07
Miami Dade Product Control
By

ENGINEERING EXPRESS®
160 SW 12th AVENUE, #106
DEERFIELD BEACH, FL 33442
Ph: (954) 354-0660 Fax: (954) 354-0443
WWW.ENGEXP.COM
CERT OF AUTH #9985
A. FRANK L. BENNARDO, P.E., INC. INNOVATION

FLORIDA STORM PROTECTION INC.
16687 SW 117 AVENUE
MIAMI, FL 33177
PHONE: (305) 971 - 9383

ACCORDION SHUTTER
WITH ALUMINUM OR POLYCARBONATE BLADES
MIAMI-DADE NOTICE OF ACCEPTANCE

REMARKS	DRWN	CHKD	DATE
INIT ISSUE	KL	FLB	08/30/10

10-FSI-0001

SCALE: - 01

PAGE DESCRIPTION:

10

6

08/30/2010 - 3:13pm keithl F:\01 Project Files\Florida Storm Inc (FSI)\2010\10-FSI-0001 Impact Tech Assn Member - Accordion Shutter NOA\10-FSI-0001_01a Alum, Polycarb Accordion Shutter.dwg

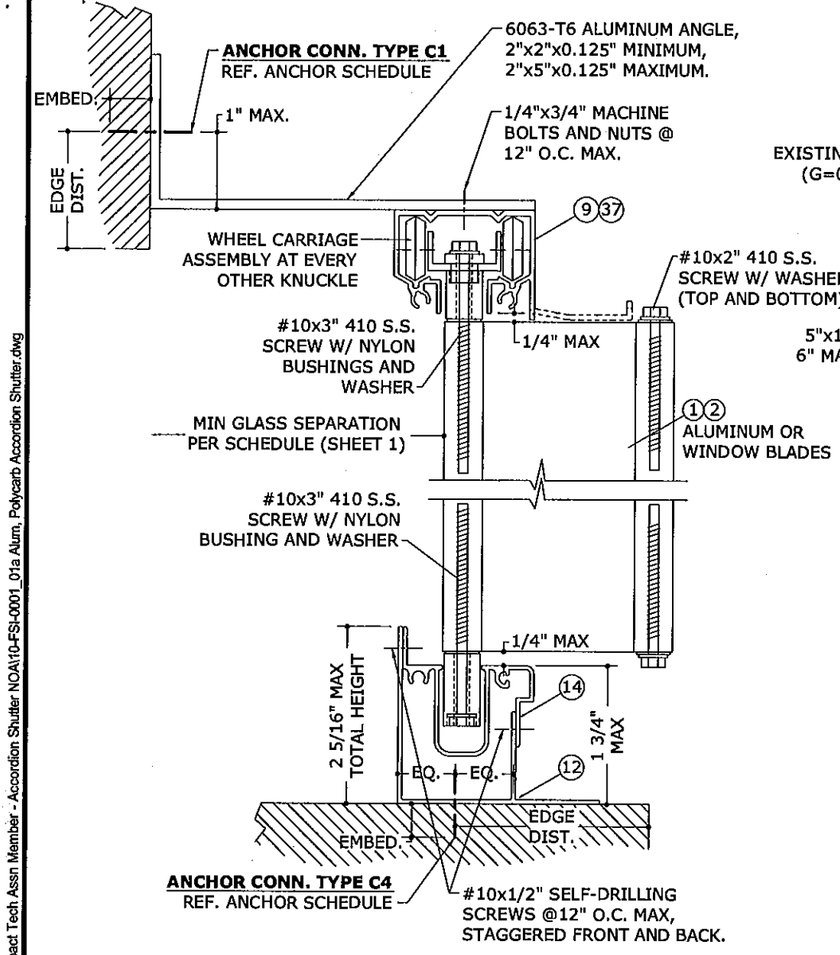

1/7 2"x5" ANGLE W/ CEILING HEADER ALT. ADJUSTABLE SILL TRACK

N.T.S. VERT SECTION

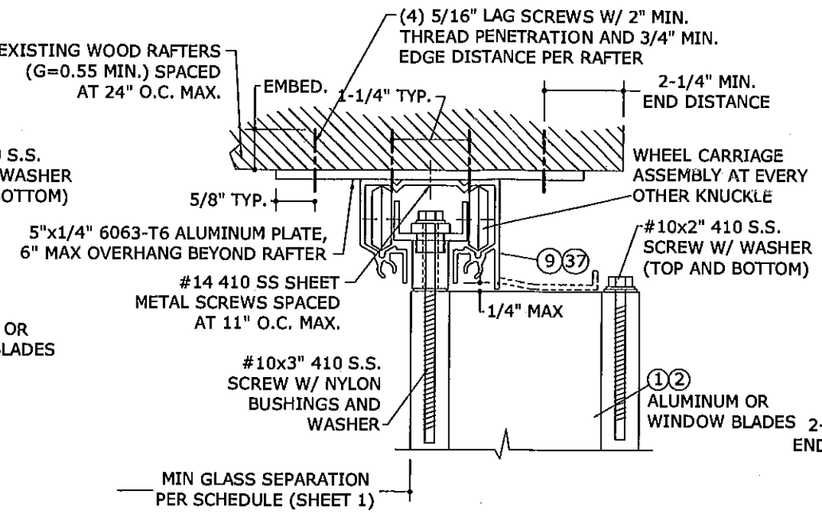

NOTE: MAXIMUM ALLOWABLE SPANS AND DESIGN PRESSURES FOR THIS MOUNTING CONDITION PER TABLE BELOW.

ALLOWABLE DESIGN PRESSURES FOR DETAIL 2/7:

SPAN:	MAX DESIGN PRESSURE:
72"	+124.8 psf / -124.8 psf
90"	+99.8 psf / -99.8 psf
108"	+83.2 psf / +83.2 psf
126"	+61.2 psf / -71.3 psf
144"	+42.4 psf / -62.4 psf

2/7 5"x1/4" PLATE TO EXISTING RAFTERS

N.T.S. VERT SECTION

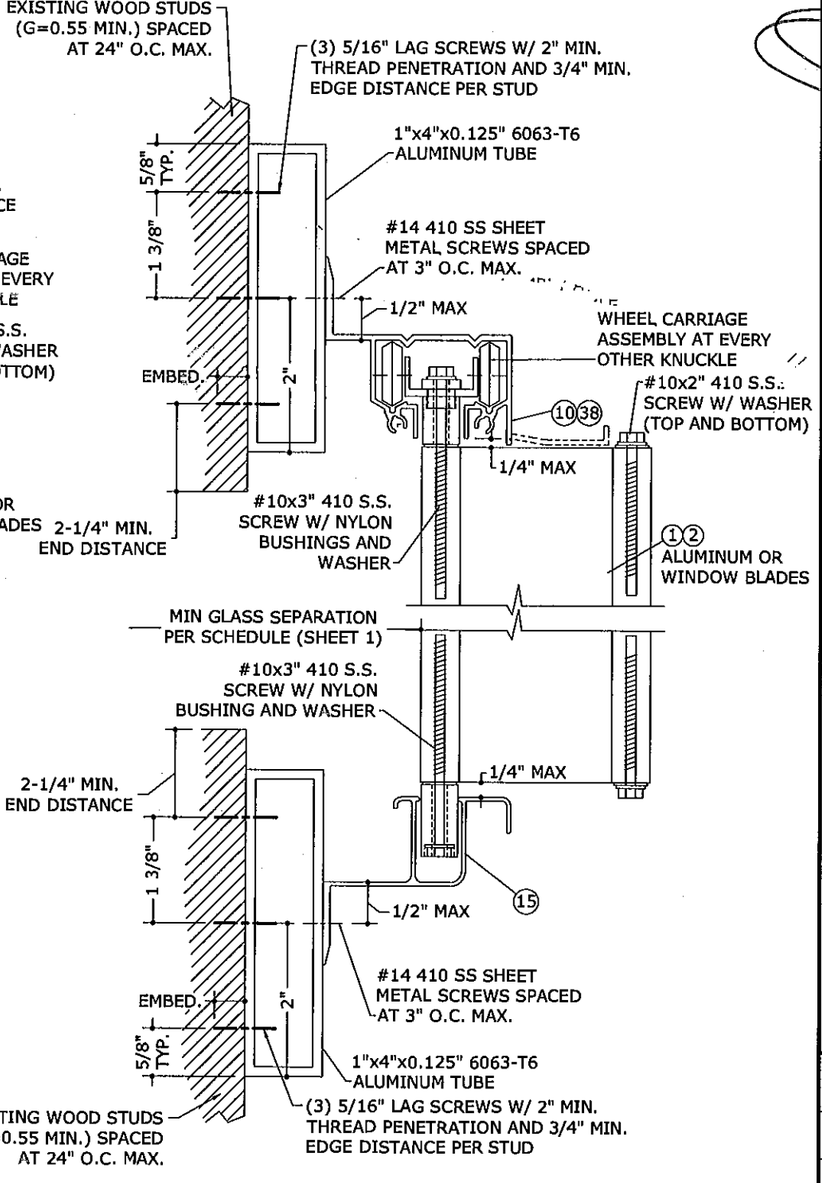

NOTE: MAXIMUM ALLOWABLE SPANS AND DESIGN PRESSURES FOR THIS MOUNTING CONDITION PER TABLE BELOW.

ALLOWABLE DESIGN PRESSURES FOR DETAIL 3/7:

SPAN:	MAX DESIGN PRESSURE:
72"	+111.5 psf / -111.5 psf
90"	+89.2 psf / -89.2 psf
108"	+74.3 psf / -74.3 psf
126"	+61.2 psf / -63.7 psf
144"	+42.4 psf / -55.7 psf

3/7 1"x4"x0.125" TUBE TO EXISTING WALL STUDS

N.T.S. VERT SECTION

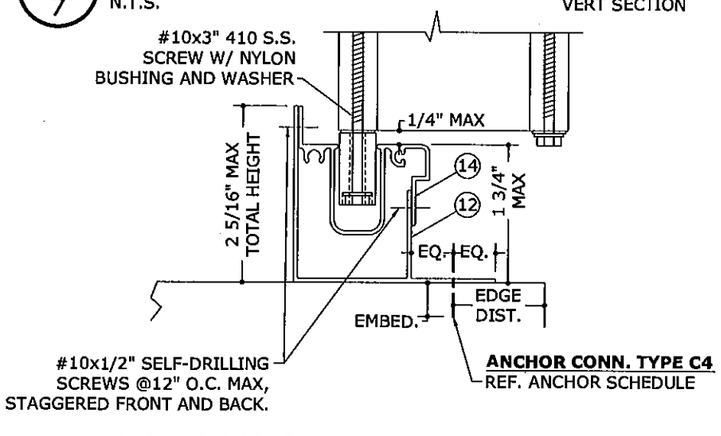

4/7 ALT. ADJUSTABLE SILL TRACK THRU-FLANGE INSTALLATION

N.T.S. VERT SECTION

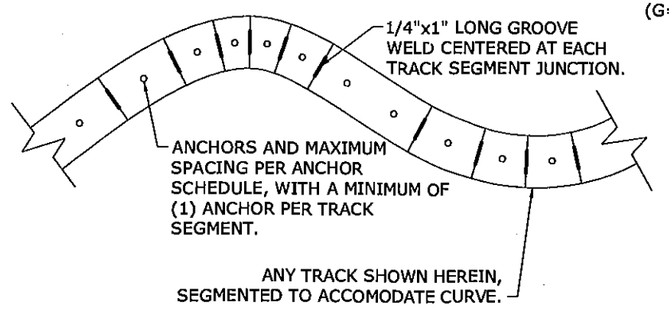

5/7 OPTIONAL CURVED TRACK WITH SEGMENTED SECTIONS

N.T.S. PLAN VIEW

Approved as complying with the Florida Building Code
Date 03/31/2011
NOA# 10-0902.07
Miami Dade Product Control
By Helena A. Alder

ENGINEERING EXPRESS®
160 SW 12th AVENUE, #106
DEERFIELD BEACH, FL 33442
Ph: (954) 354-0660 Fax: (954) 354-0443
WWW.ENGEXP.COM
CERT OF AUTH #9685
A FRANK L. BENNARDO, P.E., INC. INNOVATION

FLORIDA STORM PROTECTION INC.
16687 SW 117 AVENUE
MIAMI, FL 33177
PHONE: (305) 971 - 9383

ACCORDION SHUTTER
WITH ALUMINUM OR POLYCARBONATE BLADES
MIAMI-DADE NOTICE OF ACCEPTANCE

REMARKS	DRWN	CHKD	DATE
INIT ISSUE	KL	FLB	08/30/10

10-FSI-0001
SCALE: - 01
PAGE DESCRIPTION:

7 / 10

08/30/2010 - 3:13pm keithl F:\01 Project Files\Florida Storm Inc (FSI)\2010\10-FSI-0001 Impact Tech Assn Member - Accordion Shutter NOA\10-FSI-0001_01a Alum, Polycarb Accordion Shutter.dwg

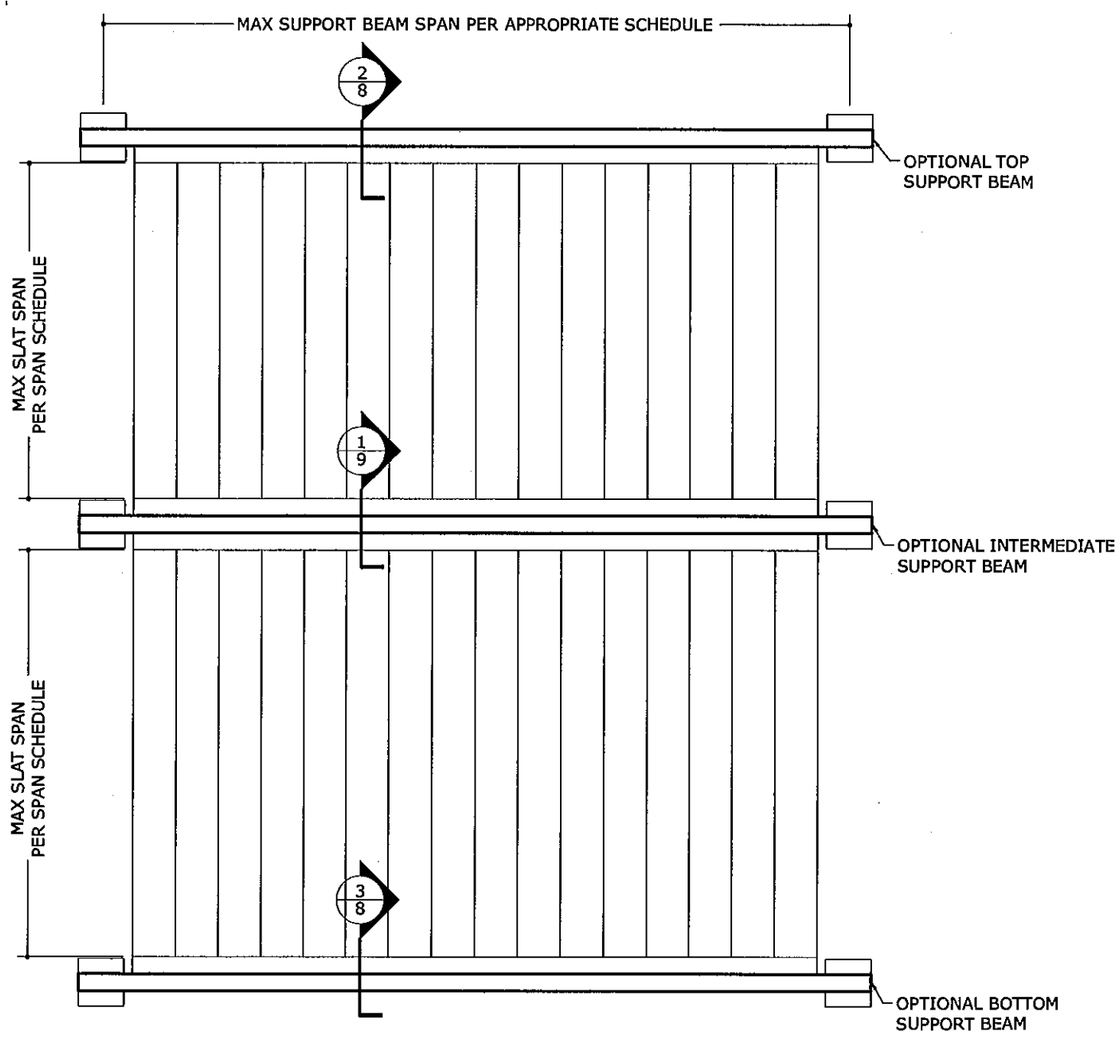

1/8 ELEVATION WITH STORM BARS

N.T.S. EXTERIOR ELEV

BEAM DESIGN SCHEDULE		
BEAM SIZE	SHUTTER SPAN	BEAM SPAN
2"x5"x0.125"	5'-0"	9'-5"
	8'-0"	8'-1"
	10'-0"	7'-6"
2"x8"x0.072"/0.224"	5'-0"	14'-0"
	8'-0"	11'-6"
	10'-0"	10'-4"
2"x9"x0.072"/0.224"	5'-0"	15'-5"
	8'-0"	12'-5"
	10'-0"	11'-2"

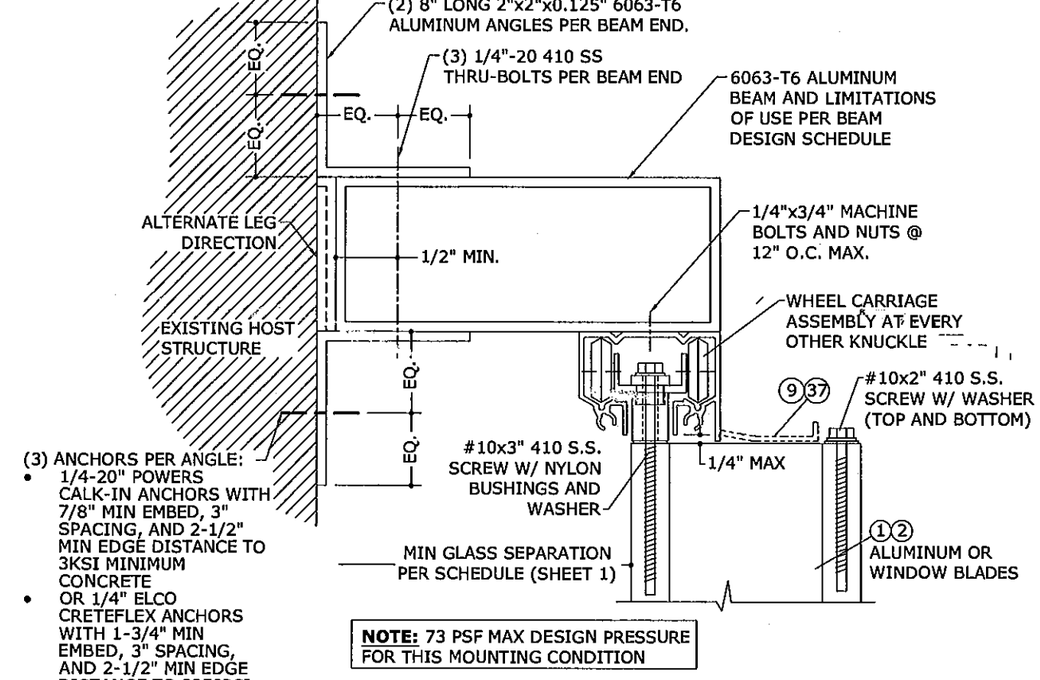

2/8 TOP SUPPORT BEAM

N.T.S. VERT SECTION

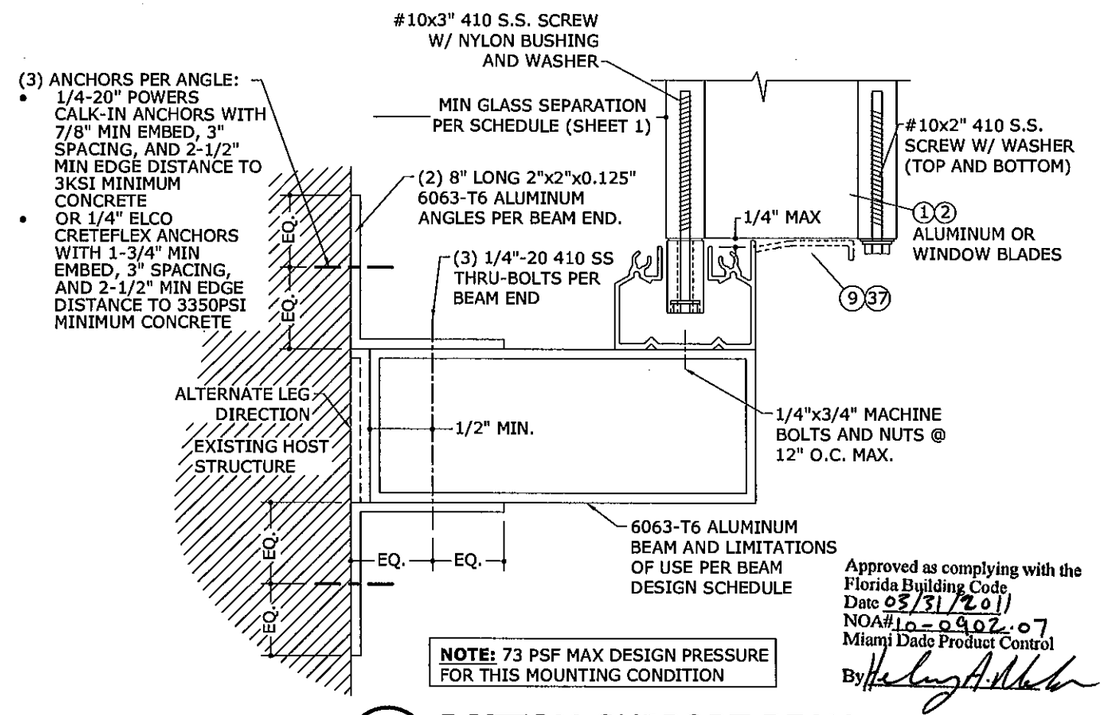

Approved as complying with the Florida Building Code
Date 03/31/2011
NOA# 10-0902.07
Miami Dade Product Control
By

3/8 BOTTOM SUPPORT BEAM

N.T.S. VERT SECTION

ENGINEERING EXPRESS®
160 SW 12th AVENUE, #106
DEERFIELD BEACH, FL 33442
Ph: (954) 354-0660 Fax: (954) 354-0443
WWW.ENGEXP.COM
CERT OF AUTH #9885
A. FRANK L. BENNARDO, P.E., INC. INNOVATION

FLORIDA STORM PROTECTION INC.
16687 SW 117 AVENUE
MIAMI, FL 33177
PHONE: (305) 971 - 9383

ACCORDION SHUTTER WITH ALUMINUM OR POLYCARBONATE BLADES
MIAMI-DADE NOTICE OF ACCEPTANCE

REMARKS	DRWN	CHKD	DATE
INIT ISSUE	KL	FLB	08/30/10

10-FSI-0001
SCALE: - 01
PAGE DESCRIPTION:
10
8

08/30/2010 - 3:13pm keithl F:\01 Project Files\Florida Storm Inc (FSI)\2010\10-FSI-0001 Impact Tech Assn Member - Accordion Shutter NOA\10-FSI-0001_01a Alum, Polycarb Accordion Shutter.dwg

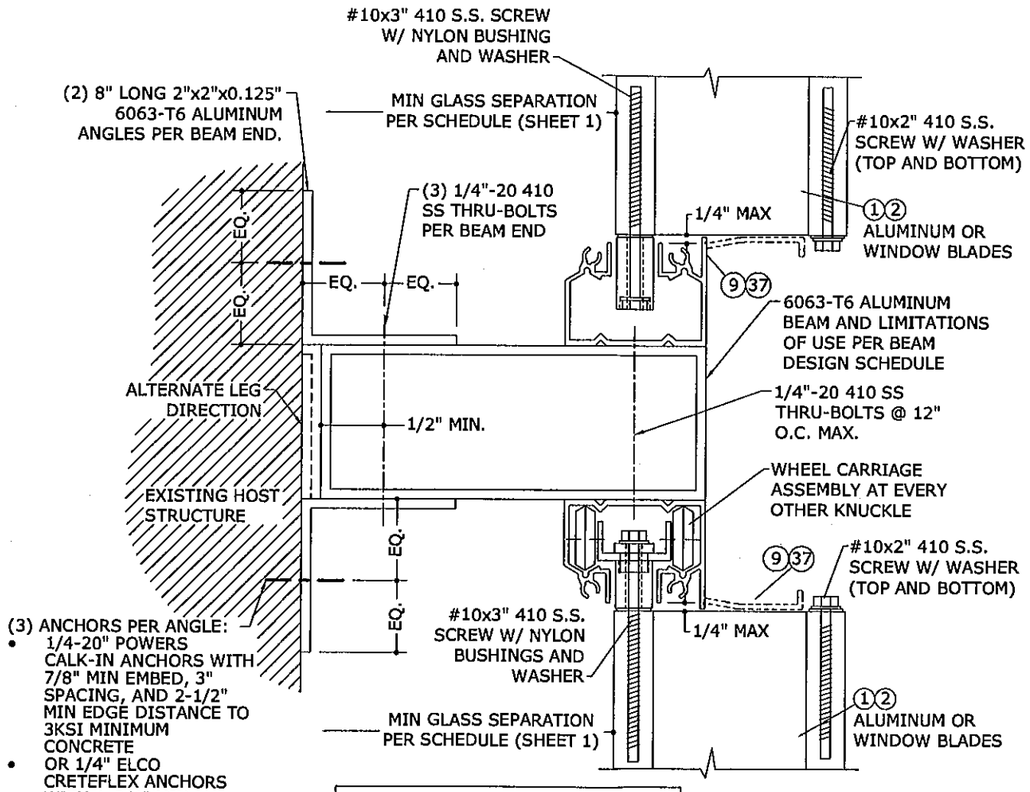

NOTE: 36 PSF MAX DESIGN PRESSURE FOR THIS MOUNTING CONDITION

1/9 INTERMEDIATE SUPPORT BEAM

N.T.S. VERT SECTION

Approved as complying with the Florida Building Code
Date 03/31/2011
NOA# 10-0902.07
Miami Dade Product Control
By [signature]

ENGINEERING EXPRESS®
160 SW 12th AVENUE, #106
DEERFIELD BEACH, FL 33442
PH: (954) 354-0660 FAX: (954) 354-0443
WWW.ENGEXP.COM
CERT OF AUTH #9885
A. FRANK L. BENNARDO, P.E., INC. INNOVATION

FLORIDA STORM PROTECTION INC.
16687 SW 117 AVENUE
MIAMI, FL 33177
PHONE: (305) 971 - 9383

ACCORDION SHUTTER
WITH ALUMINUM OR POLYCARBONATE BLADES
MIAMI-DADE NOTICE OF ACCEPTANCE

REMARKS	DRWN	CHKD	DATE
INIT ISSUE	KL	FLB	08/30/10

10-FSI-0001
SCALE: - 01
PAGE DESCRIPTION:

10
9

08/30/2010 - 3:13pm keithl F:\01 Project Files\Florida Storm Inc (FSI)\2010\10-FSI-0001 Impact Tech Assn Member - Accordion Shutter NOA\10-FSI-0001_01a Alum, Polycarb Accordion Shutter.dwg

ANCHOR SCHEDULE

HOST STRUCT.	ANCHOR	LOAD (psf)	2.5" MIN EDGE DISTANCE																			
			Spans Up To 6'-0" CONN TYPE					Spans Up To 9'-0" CONN TYPE					Spans Up To 12'-0" CONN TYPE					Spans Up To 13'-6" CONN TYPE				
			C1	C2	C3	C4	C5	C1	C2	C3	C4	C5	C1	C2	C3	C4	C5	C1	C2	C3	C4	C5
CONCRETE	1/4" ITW TAPCON WITH 1-3/4" EMBED (3192psi MIN CONC)	47	12.0"	12.0"	12.0"	11.7"	12.0"	12.0"	12.0"	12.0"	7.4"	12.0"	11.2"	8.9"	11.8"	5.5"	9.0"	9.5"	7.6"	10.6"	4.8"	8.0"
		60	12.0"	12.0"	12.0"	8.9"	12.0"	12.0"	9.5"	12.0"	5.7"	9.4"	7.9"	6.4"	9.4"	4.2"	7.0"	6.8"	5.5"	8.4"	3.7"	6.2"
		72	12.0"	12.0"	12.0"	7.3"	11.9"	9.2"	7.4"	10.3"	4.7"	7.8"	6.2"	5.1"	7.9"	3.5"	5.8"	5.8"	4.7"	7.4"	3.3"	5.5"
		120	7.9"	6.4"	9.4"	4.2"	7.0"	5.8"	4.7"	7.4"	3.3"	5.5"	5.8"	4.7"	7.4"	3.3"	5.5"	5.8"	4.7"	7.4"	3.3"	5.5"
		152	5.8"	4.7"	7.5"	3.3"	5.5"	5.8"	4.7"	7.4"	3.3"	5.5"	5.8"	4.7"	7.4"	3.3"	5.5"	5.8"	4.7"	7.4"	3.3"	5.5"
	1/4" ELCO PANELMATE (FEMALE, MALE) W/ 1-3/4" MIN EMBED (3350psi MIN CONC) *	47	12.0"	12.0"	12.0"	11.8"	12.0"	12.0"	12.0"	12.0"	7.5"	12.0"	11.2"	8.9"	12.0"	5.5"	9.2"	9.4"	7.5"	10.9"	4.9"	8.1"
		60	12.0"	12.0"	12.0"	9.0"	12.0"	11.9"	9.5"	12.0"	5.8"	9.6"	7.9"	6.4"	9.6"	4.3"	7.1"	6.7"	5.5"	8.6"	3.8"	6.3"
		72	12.0"	12.0"	12.0"	7.3"	12.0"	9.1"	7.3"	10.7"	4.8"	8.0"	6.2"	5.0"	8.1"	3.5"	5.9"	5.8"	4.7"	7.7"	3.3"	5.6"
		120	7.9"	6.4"	9.6"	4.3"	7.1"	5.8"	4.7"	7.7"	3.3"	5.6"	5.8"	4.7"	7.7"	3.3"	5.6"	5.8"	4.7"	7.7"	3.3"	5.6"
		152	5.8"	4.7"	7.7"	3.3"	5.6"	5.8"	4.7"	7.7"	3.3"	5.6"	5.8"	4.7"	7.7"	3.3"	5.6"	5.8"	4.7"	7.7"	3.3"	5.6"
	1/4 ELCO CRETEFLEX W/ 1-3/4" MIN EMBED (3350psi MIN CONC)	47	12.0"	12.0"	12.0"	12.0"	12.0"	12.0"	12.0"	12.0"	9.6"	12.0"	12.0"	10.2"	12.0"	7.0"	12.0"	10.8"	8.7"	12.0"	6.2"	11.1"
		60	12.0"	12.0"	12.0"	11.4"	12.0"	12.0"	10.9"	12.0"	7.3"	12.0"	9.1"	7.3"	12.0"	5.4"	9.7"	7.8"	6.3"	12.0"	4.8"	8.6"
		72	12.0"	12.0"	12.0"	9.4"	12.0"	10.5"	8.4"	12.0"	6.0"	10.8"	7.1"	5.8"	11.8"	4.5"	8.1"	6.6"	5.4"	11.2"	4.2"	7.6"
		120	9.1"	7.3"	12.0"	5.4"	9.7"	6.6"	5.4"	11.2"	4.2"	7.6"	6.6"	5.4"	11.2"	4.2"	7.6"	6.6"	5.4"	11.2"	4.2"	7.6"
		152	6.7"	5.4"	11.2"	4.2"	7.6"	6.6"	5.4"	11.2"	4.2"	7.6"	6.6"	5.4"	11.2"	4.2"	7.6"	6.6"	5.4"	11.2"	4.2"	7.6"
	1/4-20 POWERS CALK-IN WITH 7/8" MIN EMBED (3000psi MIN CONC) *	47	12.0"	12.0"	12.0"	9.2"	12.0"	12.0"	12.0"	11.1"	5.9"	9.1"	9.7"	7.7"	8.5"	4.3"	6.7"	8.2"	6.6"	7.6"	3.8"	6.0"
		60	12.0"	12.0"	12.0"	7.0"	10.7"	10.4"	8.2"	8.8"	4.5"	7.1"	6.9"	5.5"	6.7"	3.3"	5.3"	5.9"	4.8"	6.0"	3.0"	4.7"
		72	12.0"	11.7"	10.9"	5.7"	8.9"	7.9"	6.4"	7.4"	3.7"	5.8"	5.4"	4.4"	5.6"		4.4"	5.0"	4.1"	5.3"		4.1"
		120	6.9"	5.5"	6.7"	3.3"	5.3"	5.0"	4.1"	5.3"		4.1"	5.0"	4.1"	5.3"		4.1"	5.0"	4.1"	5.3"		4.1"
		152	5.0"	4.1"	5.3"		4.1"	5.0"	4.1"	5.3"		4.1"	5.0"	4.1"	5.3"		4.1"	5.0"	4.1"	5.3"		4.1"
	1/4 ELCO PANELMATE INSERT WITH 1-5/8" MIN EMBED (3000psi MIN CONC) *	47	12.0"	12.0"	12.0"	7.7"	12.0"	11.3"	8.8"	10.6"	4.9"	8.2"	7.1"	5.6"	8.1"	3.6"	6.1"	5.9"	4.8"	7.3"	3.2"	5.4"
		60	12.0"	11.7"	12.0"	5.8"	9.7"	7.5"	6.0"	8.5"	3.8"	6.3"	5.0"	4.0"	6.5"		4.7"	4.3"	3.5"	5.8"		4.2"
		72	10.9"	8.5"	10.4"	4.8"	8.0"	5.8"	4.6"	7.1"	3.1"	5.3"	3.9"	3.2"	5.4"		3.9"	3.6"	3.0"	5.1"		3.7"
		120	5.0"	4.0"	6.5"		4.7"	3.6"	3.0"	5.1"		3.7"	3.6"	3.0"	5.1"		3.7"	3.6"	3.0"	5.1"		3.7"
		152	3.7"	3.0"	5.2"		3.7"	3.6"	3.0"	5.1"		3.7"	3.6"	3.0"	5.1"		3.7"	3.6"	3.0"	5.1"		3.7"
HOLLOW BLOCK	1/4" ITW TAPCON WITH 1-1/4" EMBED	47	12.0"	9.3"	10.8"	4.3"	8.1"	5.3"	4.1"	7.6"		5.2"	3.3"		5.9"		3.9"			5.3"		3.4"
		60	7.2"	5.4"	8.8"	3.2"	6.2"	3.5"		6.1"		4.0"			4.7"		3.0"			4.2"		
		72	5.1"	3.9"	7.5"		5.1"			5.2"		3.3"			4.0"					3.8"		
		120			4.7"		3.0"			3.8"					3.8"					3.8"		
		152			3.8"					3.8"					3.8"					3.8"		
	1/4" ELCO PANELMATE (FEMALE, MALE) W/ 1-1/4" MIN EMBED *	47	12.0"	12.0"	12.0"	6.3"	10.6"	9.0"	7.0"	9.2"	4.0"	6.9"	5.6"	4.5"	7.1"		5.1"	4.7"	3.8"	6.3"		4.5"
		60	12.0"	9.3"	10.6"	4.8"	8.2"	6.0"	4.8"	7.3"	3.1"	5.4"	4.0"	3.2"	5.6"		4.0"			5.0"		3.5"
		72	8.7"	6.7"	9.0"	3.9"	6.8"	4.6"	3.7"	6.2"		4.5"	3.1"		4.7"		3.3"			4.5"		3.1"
		120	4.0"	3.2"	5.6"		4.0"			4.5"		3.1"			4.5"		3.1"			4.5"		3.1"
		152			4.5"		3.1"			4.5"		3.1"			4.5"		3.1"			4.5"		3.1"
	1/4 ELCO CRETEFLEX W/ 1-1/4" MIN EMBED	47	12.0"	12.0"	12.0"	7.4"	12.0"	10.0"	7.8"	11.5"	4.7"	8.4"	6.2"	5.0"	8.8"	3.4"	6.2"	5.3"	4.2"	7.9"	3.0"	5.5"
		60	12.0"	10.3"	12.0"	5.6"	10.0"	6.7"	5.3"	9.2"	3.6"	6.5"	4.4"	3.6"	7.0"		4.8"	3.8"	3.1"	6.3"		4.3"
		72	9.6"	7.5"	11.3"	4.6"	8.2"	5.1"	4.1"	7.8"	3.0"	5.4"	3.5"		5.9"		4.0"	3.2"		5.6"		3.8"
		120	4.4"	3.6"	7.0"		4.8"	3.2"		5.6"		3.8"	3.2"		5.6"		3.8"	3.2"		5.6"		3.8"
		152	3.2"		5.6"		3.8"	3.2"		5.6"		3.8"	3.2"		5.6"		3.8"	3.2"		5.6"		3.8"
	1/4-20 POWERS CALK-IN WITH 7/8" MIN EMBED *	47	12.0"	11.5"	11.2"	4.9"	8.7"	6.5"	5.1"	7.9"	3.1"	5.7"	4.1"	3.2"	6.0"		4.2"	3.4"		5.4"		3.7"
		60	8.9"	6.7"	9.1"	3.7"	6.7"	4.3"	3.4"	6.3"		4.4"			4.8"		3.3"			4.3"		
		72	6.3"	4.9"	7.7"	3.1"	5.5"	3.3"		5.3"		3.6"			4.1"					3.8"		
		120			4.8"		3.3"			3.8"					3.8"					3.8"		
		152			3.9"					3.8"					3.8"					3.8"		
	1/4 ELCO PANELMATE INSERT WITH 1-1/4" MIN EMBED *	47	12.0"	12.0"	12.0"	7.7"	12.0"	11.3"	8.8"	10.6"	4.9"	8.2"	7.1"	5.6"	8.1"	3.6"	6.1"	5.9"	4.8"	7.3"	3.2"	5.4"
		60	12.0"	11.7"	12.0"	5.8"	9.7"	7.5"	6.0"	8.5"	3.8"	6.3"	5.0"	4.0"	6.5"		4.7"	4.3"	3.5"	5.8"		4.2"
		72	10.9"	8.5"	10.4"	4.8"	8.0"	5.8"	4.6"	7.1"	3.1"	5.3"	3.9"	3.2"	5.4"		3.9"	3.6"	3.0"	5.1"		3.7"
		120	5.0"	4.0"	6.5"		4.7"	3.6"	3.0"	5.1"		3.7"	3.6"	3.0"	5.1"		3.7"	3.6"	3.0"	5.1"		3.7"
		152	3.7"	3.0"	5.2"		3.7"	3.6"	3.0"	5.1"		3.7"	3.6"	3.0"	5.1"		3.7"	3.6"	3.0"	5.1"		3.7"
			3/4" MIN EDGE DISTANCE																			
WOOD	1/4" ITW TAPCON OR #14 WOOD SCREW W/ 1-1/2" EMBED	47	12.0"	12.0"	10.4"	7.1"	9.4"	12.0"	12.0"	7.1"	4.6"	6.2"	10.3"	8.2"	5.3"	3.4"	4.6"	8.7"	6.9"	4.8"	3.0"	4.1"
		60	12.0"	12.0"	8.2"	5.5"	7.3"	11.0"	8.7"	5.6"	3.6"	4.8"	7.3"	5.9"	4.2"	2.6"	3.6"	6.2"	5.0"	3.8"	2.3"	3.2"
		72	12.0"	12.0"	6.9"	4.5"	6.1"	8.4"	6.7"	4.7"	2.9"	4.0"	5.7"	4.6"	3.5"	2.2"	3.0"	5.3"	4.3"	3.3"	2.1"	2.8"
		120	7.3"	5.9"	4.2"	2.6"	3.6"	5.3"	4.3"	3.3"	2.1"	2.8"	5.3"	4.3"	3.3"	2.1"	2.8"	5.3"	4.3"	3.3"	2.1"	2.8"
		152	5.3"	4.3"	3.3"	2.1"	2.8"	5.3"	4.3"	3.3"	2.1"	2.8"	5.3"	4.3"	3.3"	2.1"	2.8"	5.3"	4.3"	3.3"	2.1"	2.8"
	1/4" ELCO PANELMATE (FEMALE, MALE) W/ 1-7/8" MIN EMBED *	47	12.0"	12.0"	12.0"	11.5"	12.0"	12.0"	12.0"	12.0"	7.4"	10.9"	12.0"	10.8"	9.9"	5.5"	8.1"	11.4"	9.1"	8.8"	4.8"	7.2"
		60	12.0"	12.0"	12.0"	8.8"	12.0"	12.0"	11.5"	10.3"	5.7"	8.5"	9.5"	7.7"	7.8"	4.2"	6.3"	8.2"	6.6"	7.0"	3.7"	5.6"
		72	12.0"	12.0"	12.0"	7.3"	10.7"	11.0"	8.9"	8.6"	4.7"	7.0"	7.5"	6.1"	6.5"	3.5"	5.3"	7.0"	5.7"	6.2"	3.3"	5.0"
		120	9.5"	7.7"	7.8"	4.2"	6.3"	7.0"	5.7"	6.2"	3.3"	5.0"	7.0"	5.7"	6.2"	3.3"	5.0"	7.0"	5.7"	6.2"	3.3"	5.0"
		152	7.0"	5.7"	6.2"	3.3"	5.0"	7.0"	5.7"	6.2"	3.3"	5.0"	7.0"	5.7"	6.2"	3.3"	5.0"	7.0"	5.7"	6.2"	3.3"	5.0"
	1/4" LAG SCREW WITH 1.5" MIN THREAD PENETR EMBED	47	12.0"	12.0"	9.9"	7.3"	9.2"	12.0"	12.0"	6.7"	4.7"	6.1"	12.0"	10.2"	5.0"	3.5"	4.5"	10.8"	8.6"	4.5"	3.1"	4.0"
		60	12.0"	12.0"	7.8"	5.6"	7.1"	12.0"	10.9"	5.3"	3.7"	4.7"	9.0"	7.3"	4.0"	2.7"	3.5"	7.7"	6.3"	3.5"	2.4"	3.1"
		72	12.0"	12.0"	6.5"	4.6"	5.9"	10.4"	8.4"	4.4"	3.0"	3.9"	7.1"	5.8"	3.3"	2.3"	2.9"	6.6"	5.4"	3.1"	2.1"	2.8"
		120	9.0"	7.3"	4.0"	2.7"	3.5"	6.6"	5.4"	3.1"	2.1"	2.8"	6.6"	5.4"	3.1"	2.1"	2.8"	6.6"	5.4"	3.1"	2.1"	2.8"
		152	6.6"	5.4"	3.1"	2.1"	2.8"	6.6"	5.4"	3.1"	2.1"	2.8"	6.6"	5.4"	3.1"	2.1"	2.8"	6.6"	5.4"	3.1"	2.1"	2.8"

ANCHOR NOTES:

1. ANCHORS SHALL BE INSTALLED IN ACCORDANCE WITH MANUFACTURERS' RECOMMENDATIONS.
2. TAPCONS MAY BE CARBON STEEL OR STAINLESS STEEL AND SHALL BE MANUFACTURED BY ITW.
3. ENSURE MINIMUM 2.5" EDGE DISTANCE FOR ALL ANCHORS TO CONCRETE & TO HOLLOW BLOCK.
4. WHERE ANCHORS FASTEN TO NARROW FACE OF STUD FRAMING, ANCHOR SHALL BE LOCATED IN CENTER OF NOMINAL 2x (MIN) WOOD STUD (i.e. 3/4" EDGE DISTANCE IS ACCEPTABLE FOR ANCHORS TO WOOD FRAMING).
5. WOOD HOST STRUCTURE SHALL BE "SOUTHERN PINE" G=0.55 OR GREATER DENSITY.
6. MINIMUM EMBEDMENT SHALL BE AS NOTED IN ANCHOR SCHEDULE. MINIMUM EMBEDMENT AND EDGE DISTANCE EXCLUDES STUCCO, FOAM, BRICK, AND OTHER WALL FINISHES.
7. ANCHOR SCHEDULE APPLIES TO ALL PRODUCTS CERTIFIED HEREIN, BUT ONLY PROVIDES MAXIMUM ALLOWABLE ANCHOR SPACING. MAXIMUM ALLOWABLE SPANS AND PRESSURES INDICATED IN SPAN SCHEDULE SHALL APPLY.
8. WHERE EXISTING STRUCTURE IS WOOD FRAMING, EXISTING CONDITIONS MAY VARY. FIELD VERIFY THAT FASTENERS ARE INTO ADEQUATE WOOD FRAMING MEMBERS, NOT INTO PLYWOOD.
9. WOOD BUCKS (BY OTHERS) SHALL BE ANCHORED PROPERLY TO TRANSFER LOADS TO THE EXISTING STRUCTURE.
10. MACHINE SCREWS SHALL HAVE MINIMUM OF 1/2" ENGAGEMENT OF THREADS IN BASE ANCHOR AND MAY HAVE EITHER A PAN HEAD, TRUSS HEAD, OR WAFER HEAD ("SIDEWALK BOLT") U.N.O.
11. ▨ DESIGNATES ANCHOR CONDITIONS WHICH ARE NOT ACCEPTABLE FOR USE.
13. * DESIGNATES ANCHORS WHICH ARE REMOVABLE.

Approved as complying with the Florida Building Code
Date 03/31/2011
NOA# 10-0902.07
Miami Dade Product Control
By [signature]

FRANK L. BENNARDO, P.E.
#PE0046549
08/30/2010
ENGINEERING EXPRESS®
160 SW 12th AVENUE, #106
DEERFIELD BEACH, FL 33442
Ph: (954) 354-0660 Fax: (954) 354-0443
WWW.ENGEXP.COM
CERT OF AUTH #9885
A. FRANK L. BENNARDO, P.E., INC. INNOVATION

FLORIDA STORM PROTECTION INC.
16687 SW 117 AVENUE
MIAMI, FL 33177
PHONE: (305) 971 - 9383

ACCORDION SHUTTER
WITH ALUMINUM OR POLYCARBONATE BLADES
MIAMI-DADE NOTICE OF ACCEPTANCE

REMARKS	DRWN	CHKD	DATE
INIT ISSUE	KL	FLB	08/30/10

10-FSI-0001
SCALE: - 01
PAGE DESCRIPTION:
10

08/30/2010 - 3:13pm keithl F:\01 Project Files\Florida Storm Inc (FSI)\2010\10-FSI-0001 Impact Tech Assn Member - Accordion Shutter NOA\10-FSI-0001_01a Alum, Polycarb Accordion Shutter.dwg